805

In Win 805 Mid Tower Chassis

805 features a see through skeleton case structure design offering versatile HDD mounting positions creating excellent flexibility. 805 supports the all-new reversible USB 3.1 Type-C to which increases your high speed data transmissions.
805 is inherited the spirit of pursuing exquisite craftsmanship and innovative designing that brings not only the visual aesthetics but also gaming performance.

Unparalleled Panel Design

Modern and simplicity appearance with see through case skeleton structure for those who want a uniquely stylish chassis with modern design.

Incredibly Dynamic Visual Effects

The 270 degree wide-angle visual perspective allows you to enjoy dynamic visual and gaming presentations while the system is running.

Unique In Win LED Logo

In Win logo will automatically light up on the side of the case when the computer is powered on.

White LED Light (Gold/Black Version)

Red LED Light (Red Version)

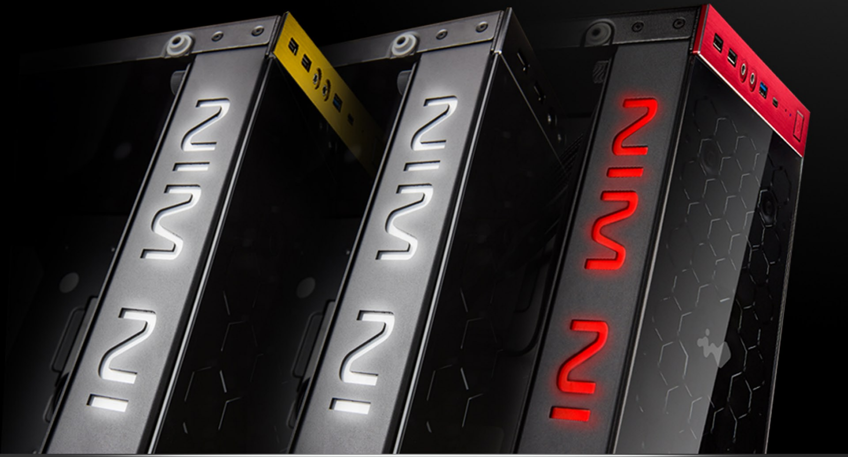

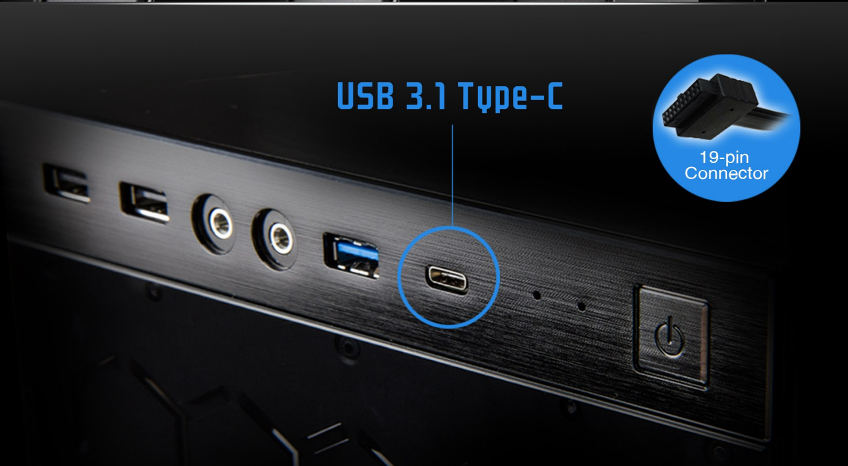

Super Speed Transmission USB 3.1 Type-C

805 is equipped with one all-new reversible USB3.1 TYPE-C port for ultimate data speed transfers up to 10Gb/s which is twice as fast USB 3.0*. This feature saves valuable transfer

time and also the USB3.1 TYPE-C is easily accessible at both ends.

* The actual data transfer speeds will be determined by your motherboard specification.

High Quality Material

The elegant and sleek 805 is constructed with high quality aluminum body surrounded by three tempered glasses with anodized stylish hairline on the top and front I/O panels.

IN WIN
IN WIN
IN WIN
IN WIN
IN WIN
IN WIN

Versatile HDD Mounting Position For Optimized Functionality

Two optional fans can be mounted at the bottom by moving HDD trays to the front to enhance airflow and achieve maximum heat dissipation.

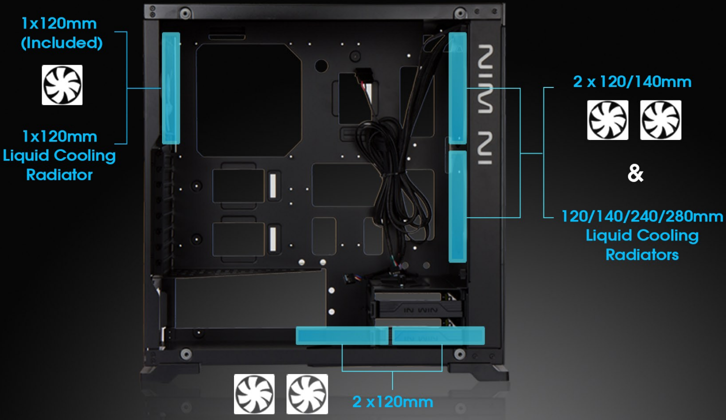

Excellent Liquid Cooling Support

Overall the 805 can accommodate two radiators (front and rear) to create the ultimate liquid cooling system for best cooling performance and thermal solutions.

Equipped with 8 PCI-E Slots

805 supports 8 x re-usable PCI-E slots that you can build a multi-GPU system to achieve powerful gaming performances.

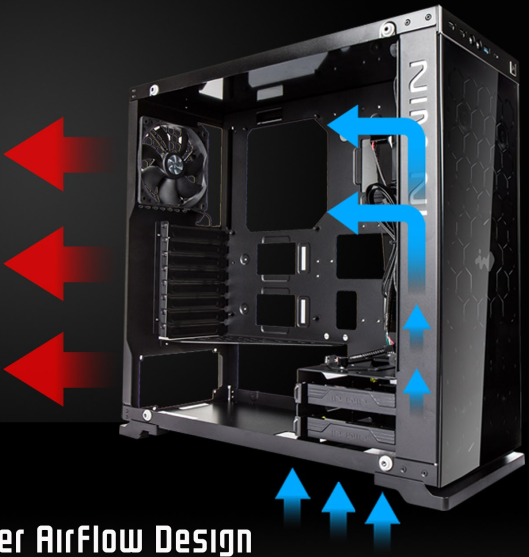

Better AirFlow Design

The cool air intakes from the bottom creates efficient air flow for quick heat dissipation.

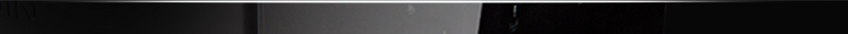

Solid Case Stand

805 features include increased strengthen case stands with four shock-proof rubbers providing the 805 with steady floor or table surface gripping.

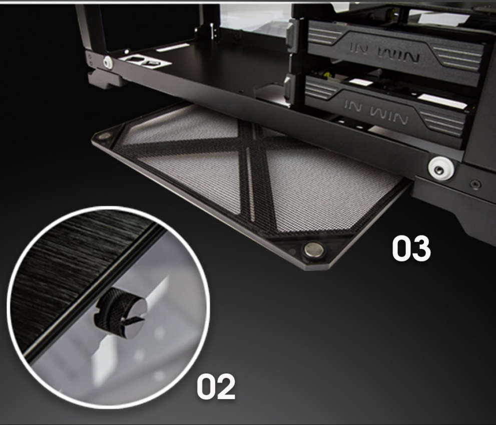

User Friendly Installation

01.Front fan bracket equipped for easy installation of fans, liquid cooling radiators, and HDD cage.
02.Affixed thumbscrews on side panels for easy

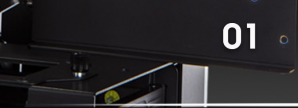

installation and removal.

03.Dust filter has an embedded magnet design for easy removal creating a convenient installation and more importantly excellent dust reduction.

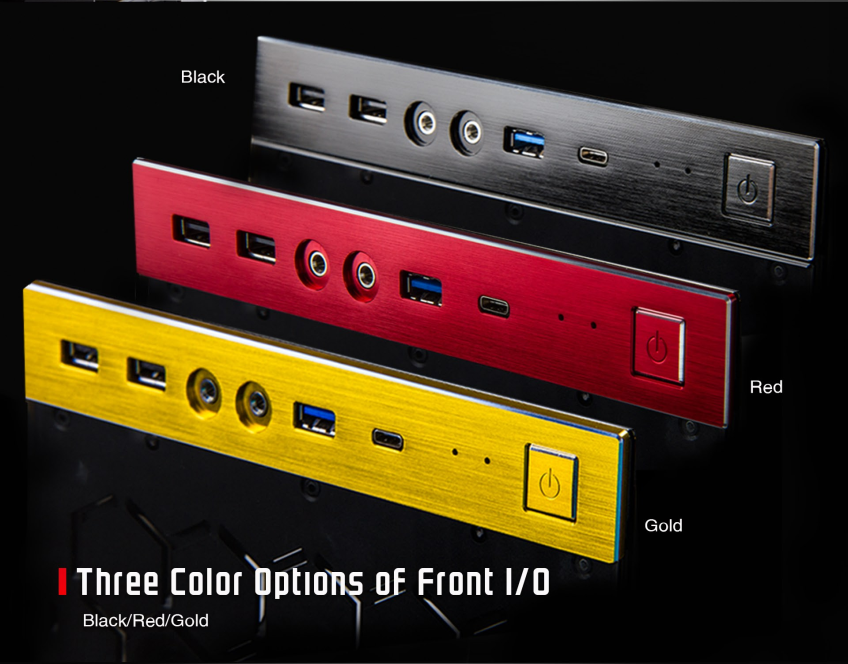

Three Color Options of Front I/O

Black/Red/Gold

USB 3.1 Type-C

LED LOGO
Without
LED LOGO

Type-C Version

USB 3.1 Type-C
LED LOGO

Standard Version

USB 3.0
Without LED LOGO

Specifications

Case Size	Mid Tower	
Material	Aluminum / Tempered Glass	
Internal Drive Bay	3.5” / 2.5” x 2 2.5” x 4	3.5” / 2.5” x 2 2.5” x 2 (Max up to 4 pcs)
M/B Form Factor	ATX / Micro-ATX /Mini-ITX (Max: 12” x 10.5”)	
Power Supply	ATX 12V, PSII Size and EPS up to 220mm	
I/O Port	USB 3.1 (Type-C, 19-pin Connector) x 1 USB 3.0 x 1, USB 2.0 x 2, HD Audio	USB 3.0 x 2, USB 2.0 x 2, HD Audio
Expansion Slots	PCI-E Slot x 8 Supports High-End Graphic Card up to 320mm (Height: 164mm)	
Thermal Solution	**Supports :** **Air Cooling** - Front: 120/140mm Fan x 2 - Rear: 120mm Fan x 1 (Included) - Bottom: 120mm Fan x 2 **Water Cooling** - Front: 120/140/240/280mm Radiator (Height up to 60mm) - Rear: 120mm Radiator (Height up to 35mm) **CPU Heatsink** Maximum CPU Heatsink up to 156mm (CPU Die Surface to Side Panel)	
Dimension (HxWxD)	476mm x 205mm x 455mm 18.7”x 8” x 18”	

CONTEMPORARY & INNOVATIVE IN WIN
www.inwin-style.com