FLUID GAMING

For EK-KIT A series units | 1st Revision, Apr 3rd 2017

Starter Liquid Cooling Kit

FLUID GAMING / A120 / A240 / A240G

USER GUIDE

EK Water Blocks bears the name of its founder Edvard König, who started experimenting with liquid cooling in 1999. From the humble beginnings in the early years of the previous decade, the company grew steadily to become a global premium liquid cooling gear manufacturer. Today, EKWB offers a complete range of products for liquid cooling, from a renowned Supremacy line of CPU water blocks, to a wide range of CoolStream radiators, from in-house developed Vardar High pressure fans, to market-proven SPC series of liquid cooling pumps and thus provides overclocking enthusiasts and PC builders with the best of what the market can offer. Fluid Gaming kits are the next step to bring extreme liquid cooling performance in the hands of dedicated gamers and PC enthusiasts around the world.

Welcome to EK-World and enjoy Fluid Gaming!

Safety precautions

1. Keep and store the product away from the reach of children.
2. Check the component list and condition of the product before installation. If there is any problem, contact the shop where you have purchased the product to get a replacement or refund.
3. EKWB d.o.o. is not responsible for any damages due to external causes, including but not limited to, improper use, problems with electrical power, accident, neglect, alteration, repair, improper installation and improper testing.
4. CPU and motherboard are subject to damage if the product is incorrectly installed.
5. This product is a CPU liquid cooling solution kit, comprising of individual original EKWB parts. Combining this liquid cooling unit with parts, other than EK Water Blocks products, may lead to warranty loss.
6. Product warranty period is 24 months.

This product is made from aluminum and can be only used with other aluminum liquid cooling components, such as Al fittings, water blocks and radiators. Mixing aluminum with copper and brass products can cause galvanic corrosion of the metal and render liquid cooling equipment useless. Such misuse is not covered by warranty. Do not use liquid metal TIM with aluminum products as it will result catastrophic corrosion failure!

TABLE OF CONTENT

SCOPE OF DELIVERY 3
REQUIRED TOOLS 4

QUICK INSTALLATION GUIDE

RADIATOR SPACE CONSTRAINT REQUIREMENTS 5
DOZEN GOOD ADVICES FOR THE NEWCOMERS 6
LIQUID COOLING SYSTEM 6
GENERAL INFORMATION ON WATER BLOCK COMPATIBILITY 7
INSTALLING THE WATER BLOCK 7
LGA-2011(-3) SOCKET MOTHERBOARDS 7
LGA-115X SOCKET MOTHERBOARDS 9
AMD® SOCKET AM4 MOTHERBOARDS 11
INSTALLING THE RADIATOR AND FANS 15
INSTALLING THE RADIATOR AND FANS 15
INSTALLING THE RADIATOR AND FANS IN ONE GO 17
INSTALLING THE PUMP-RESERVOIR UNIT 18
INSTALLING THE GPU WATERBLOCKS 19
CONNECTING THE TUBING 20
ELECTRICAL CONNECTIONS 22
CONNECTING THE PUMP-RESERVOIR UNIT 22
CONNECTING THE FANS 23
RECOMMENDED FILLING AND LEAK-TESTING PROCEDURE 24
FILLING THE SYSTEM FOR THE FIRST TIME 25
DRAINING OF THE LOOP 27
FREQUENTLY ASKED QUESTIONS 28
TROUBLESHOOTING 30
THE COOLER IS TOO LOUD 31
GENERAL LIQUID COOLING PARTS CLEANING GUIDE 31
PREVENTIVE STEPS 32
SUPPORT AND SERVICE 34
SOCIAL MEDIA 34

SCOPE OF DELIVERY

CPU water Block with AMD® mounting plate	CPU Backplate mechanism	Thermal grease	CPU Mounting mechanism
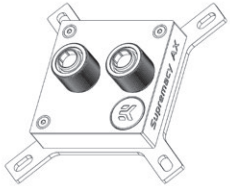	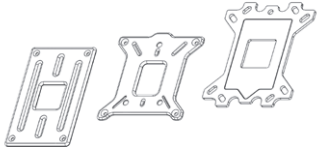	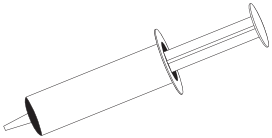	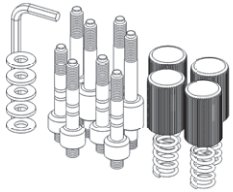

Fans	Pump-Reservoir combo	UNI Pump Bracket (120mm Fan)	Compression fittings
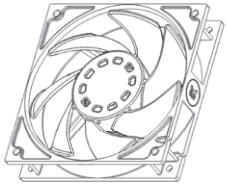	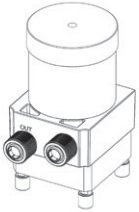	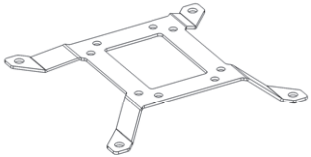	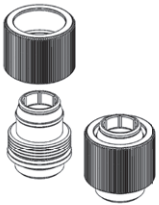

Radiator	Coolant	Tube	ATX Bridging plug
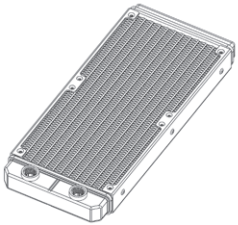			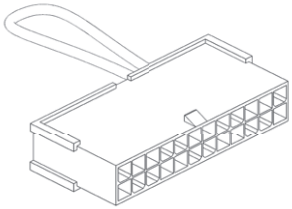

Fan cable Y-splitter

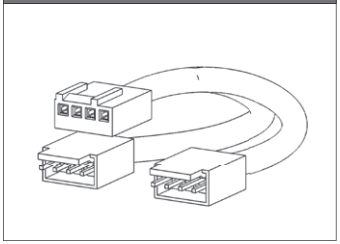

Adapter cable

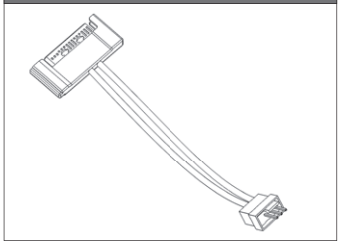

Installation manual

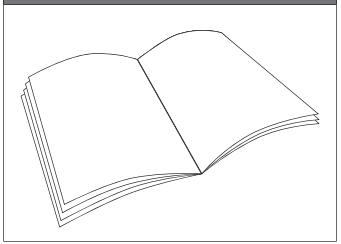

REQUIRED TOOLS

Phillips-head screwdriver

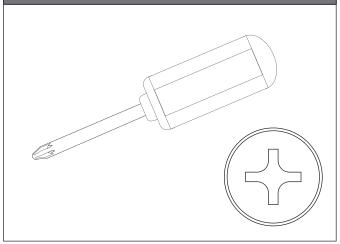

Mixing bottle

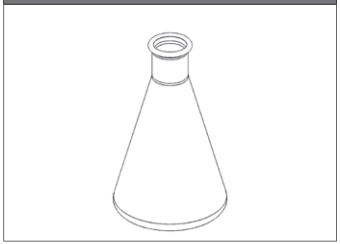

1L Bottle of distilled water

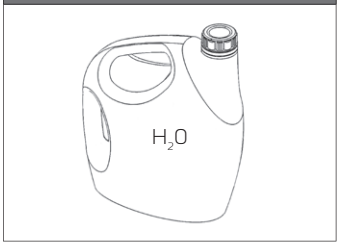

Pair of scissors

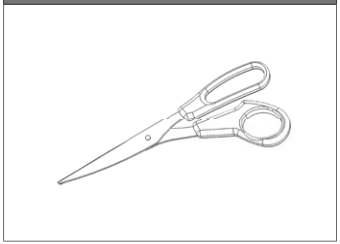

RADIATOR SPACE CONSTRAINT REQUIREMENTS

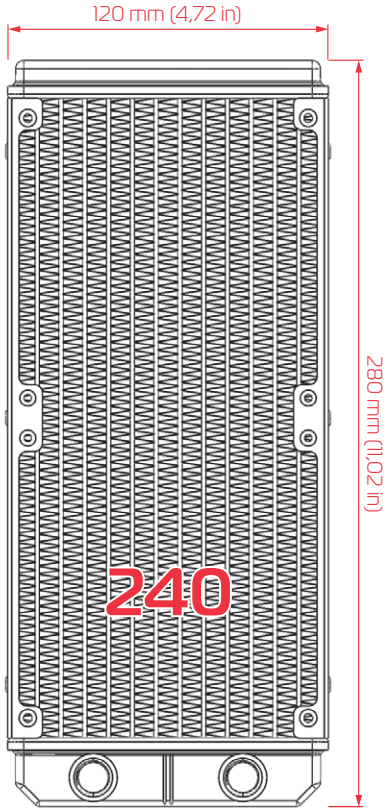

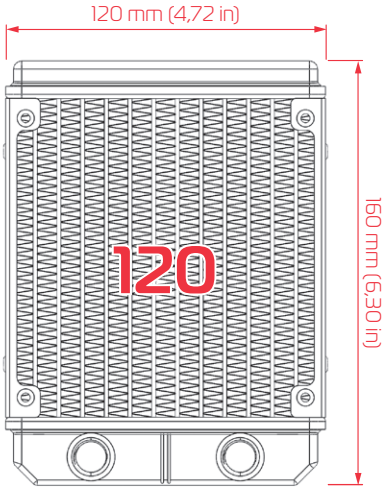

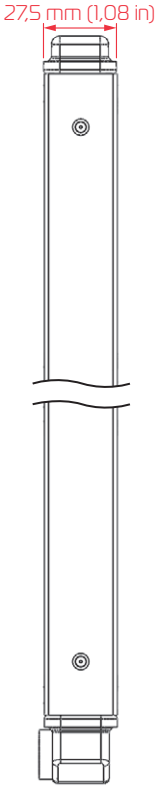

DOZEN GOOD ADVICES FOR THE NEWCOMERS

1. In order to make the package more compact we have decided to enclose only the coolant concentrate for liquid cooling. Therefore you need to provide 1 liter (1L) of distilled water. You can get it at every gas station or supermarket.
2. Never run this system on tap water and always use the enclosed cooling concentrate in correct ratio.
3. Never use alcohol, alcohol derivatives or alcohol based solvents in the system. Using alcohol might result in permanent damage to water cooling KIT components, especially acrylic parts of the system.
4. Reservoir must be positioned above the height level of the water pump in order for liquid to flood the pump which is crucial for the fi rst start-up.
5. Generally, for optimal performance, the Reservoir must be positioned before the pump in the water loop.
6. Generally, for optimal performance, the CPU water block should be right after the Radiator in the water loop.
7. Generally, for optimal performance, the Pump should be positioned before the Radiator in the water loop.
8. It is best practice to do a proper leak test before using your computer.
9. If you spot any leaks, turn off the power immediately!
10. Optimize tubing length in order to prevent excessive bending and kinking of the tubing.
11. **Never let your pump run dry.** If this is happening for a prolonged period of time you may risk destroying water pump's bearing, rendering the pump useless.
12. You are encouraged to periodically clean the radiator assembly as it will collect dust over time. This is best done with soft wide tip brush and vacuum cleaner. See chapter 'General liquid cooling parts cleaning guide.

LIQUID COOLING SYSTEM

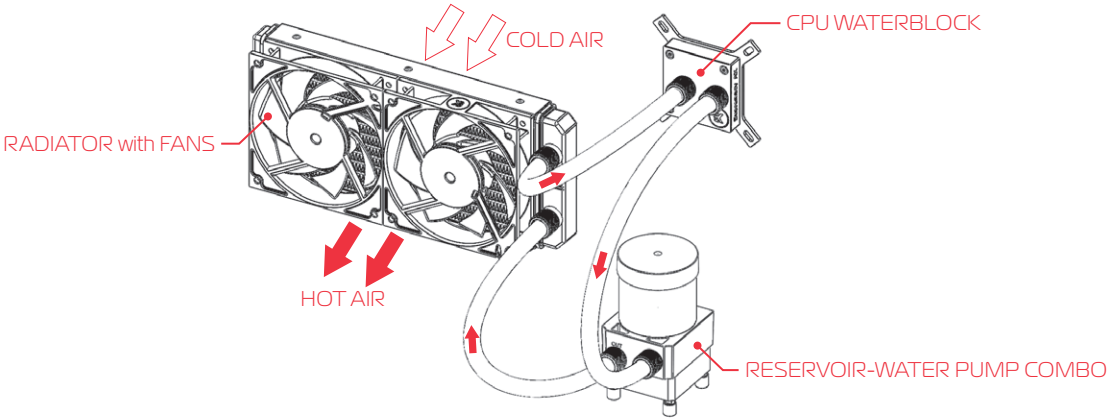

GENERAL INFORMATION ON WATER BLOCK COMPATIBILITY

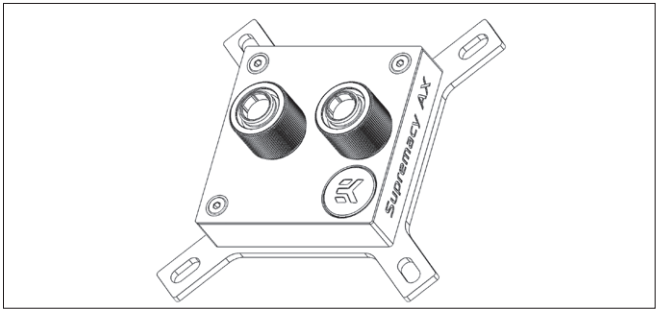

This CPU liquid cooling unit is pre-assembled for use with modern Intel® and AMD® desktop socket type motherboards. By default (out of the box) this water block supports the following CPU sockets:

- Intel® Socket LGA-115x
- Intel® Socket LGA-2011(-3)
- AMD® Socket AM4*

*requires replacing Intel® mounting plate with AMD® one.

INSTALLING THE WATER BLOCK

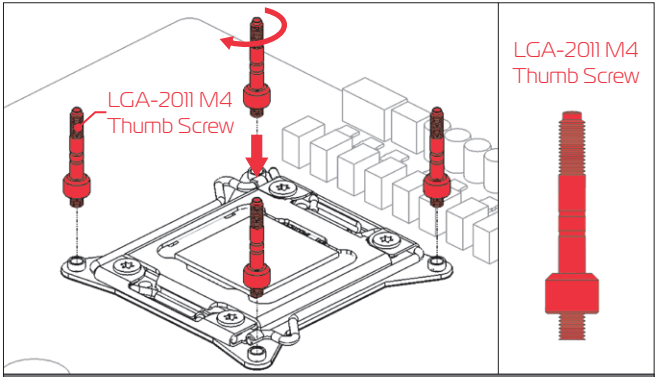

STEP 1

LGA-2011(-3) SOCKET MOTHERBOARDS

STEP 1

Prepare the foil bag with mounting mechanism, which is enclosed with the CPU water block delivery.

Install four (4) specific LGA-2011 M4 thumb screws into four M4 threaded stubs on the LGA-2011 socket integrated latch mechanism (ILM). The screws are to be installed using no tools (i.e. pliers).

> It is recommended to remove the motherboard form the PC chassis before proceeding with installation of the CPU water block because of the space constraint limitations of various computer cases.

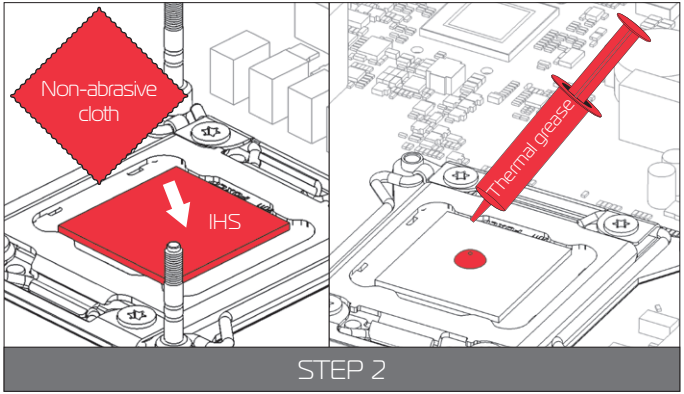

STEP 2

Cleaning the CPU: Wipe the CPU's contact surface (by using non–abrasive cloth or Q-tip, as shown on sample photo).

Applying thermal compound: EK recommends blob or line method of applying the enclosed EK-TIM Ectotherm thermal compound to the CPU heat spreader (IHS) - see sample photo on right.

> The quantity of about two rice grains is just about right. There is no need to cover the whole IHS. Applying too much thermal grease will have negative impact on the cooling performance!

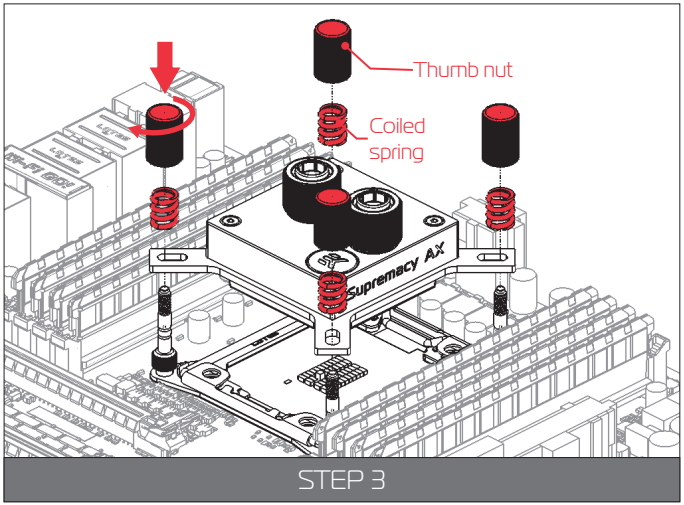

STEP 3

Take the waterblock and remove the sticker on the aluminum head.

Align the water block over the mounting screws on the LGA-2011(-3) motherboard with pre-installed CPU.

> Before proceeding with the installation It is mandatory to remove the protective foil from the backside of the water block.

Place an enclosed compression spring and thumb nut over each M4 thumb screw. Start fastening two thumb nuts at a time, preferably in cross pattern and do not tighten them fully until all of them are partially screwed in. Then - using your fingers only - screw in all four thumb nuts until you reach the end of the thread.

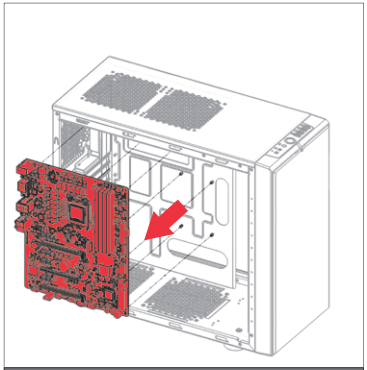

STEP 1

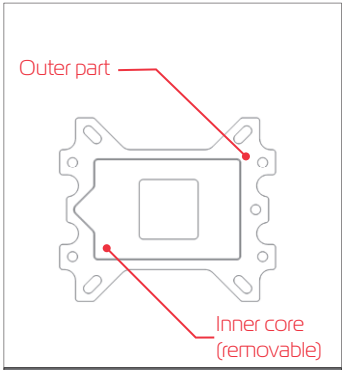

STEP 2

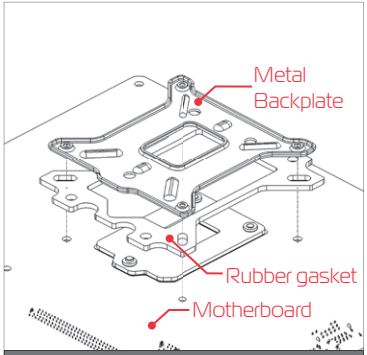

STEP 3

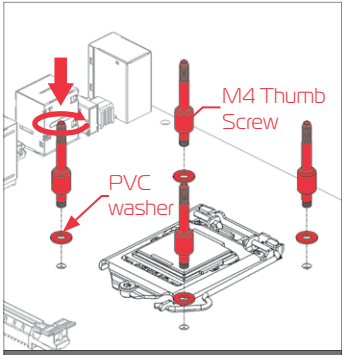

STEP 4

LGA-115x SOCKET MOTHERBOARDS

STEP 1

If already installed, please remove the motherboard from your computer and place it on an even surface with front facing down.

STEP 2

Preparing backplate rubber gasket

The enclosed rubber gasket is essential part of the backplate and mounting system and must be used every time you install this water block on your motherboard.

> ⚠ The rubber gasket has a partially cut inner part which needs to be removed when installed on Intel LGA-115x motherboard. The rubber is held on four places and can be peeled away with hand.

STEP 3

Install backplate rubber gasket and place metal backplate for Intel LGA-115x socket to the back of your motherboard RIBBED SIDE UP! (facing away from the motherboard) Align the holes on the motherboard with holes on rubber gasket and backplate.

> ⚠ Make sure to orientate the rubber gasket to fit past the CPU socket ILM backplate. On certain ITX form factor motherboards the rubber gasket may need to be trimmed using household scissors.

Carefully rotate motherboard assembly with front side facing up with one hand while holding the backplate and rubber in place with the other hand.

STEP 4

Install four (4) M4 thumb screws onto your motherboard. It is mandatory to put 0.7mm plastic washer underneath each of the M4 thumb screws. Tighten the screws to the metal backplate until you reach the end of the thread. Using tools (such as pliers) is not recommended.

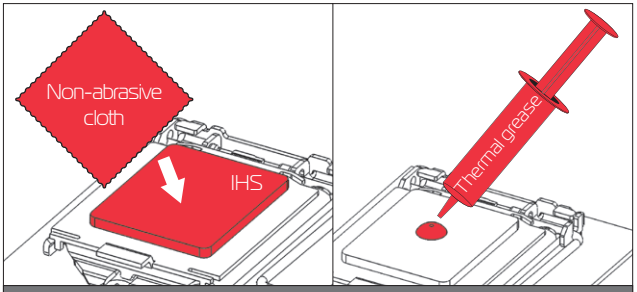

STEP 5

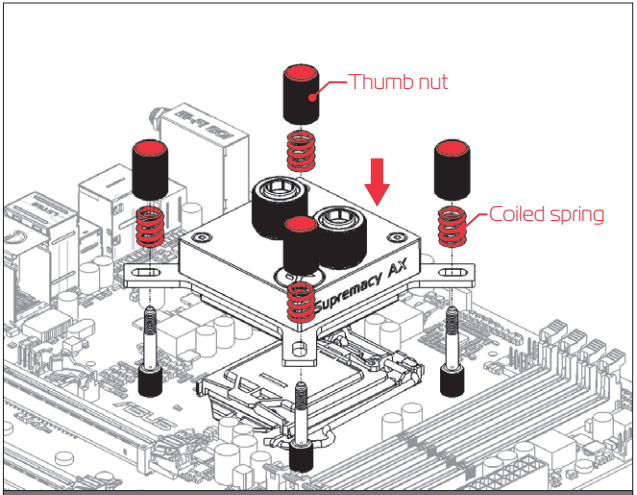

STEP 6

STEP 5

Cleaning the CPU: Wipe the CPU's contact surface (by using non–abrasive cloth or Q-tip, as shown on sample photo).

Applying thermal compound: EK recommends blob or line method of applying the enclosed EK-TIM Ectotherm thermal compound to the CPU heat spreader (IHS) - see sample photo on right.

> The quantity of about two rice grains is just about right. There is no need to cover the whole IHS. Applying too much thermal grease will have negative impact on the cooling performance!

STEP 6

Align the water block over the mounting screws on the LGA-115x motherboard with pre-installed CPU.

> Before proceeding with the installation It is mandatory to remove the protective foil from the backside of the water block, as well as warning label from the front of the waterblock!

Place an enclosed coiled spring and thumb nut over each M4 thumb screw. Start fastening two thumb nuts at a time, preferably in cross pattern and do not tighten them fully until all of them are partially screwed in. Then – using your fingers only screw in all four thumb nuts until you reach the end of the thread.

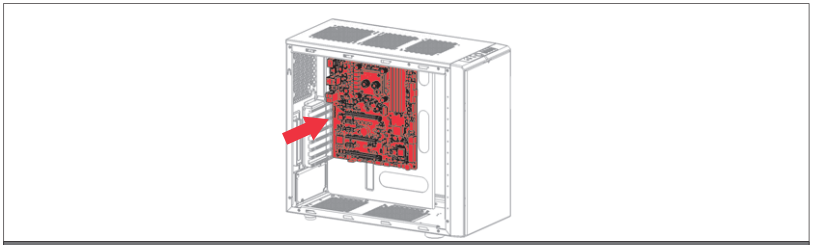

STEP 7

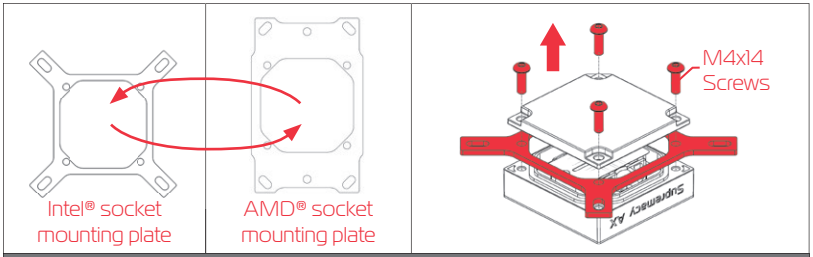

STEP 1

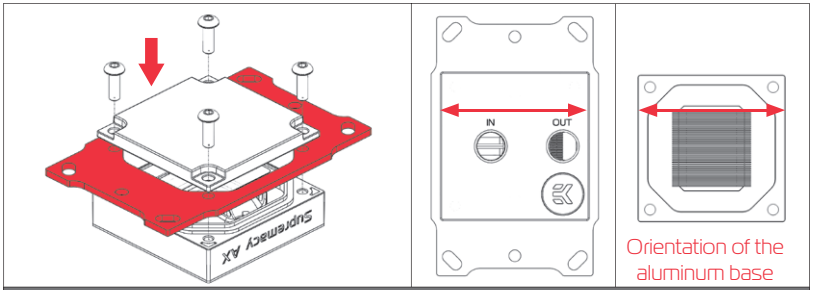

STEP 2

STEP 7

Install the CPU water block along with the motherboard back into the computer chassis.

The installation of the CPU water block is now complete.

AMD® SOCKET AM4 MOTHERBOARDS

STEP 1

Replacing the mounting plate:

Place the water block on a neven surface and remove the four M4x12 screws attaching the aluminum base to the top using 2,5mm Allen key in counter-clockwise direction.

STEP 2

Replace the Intel factory installed mounting plate with AMD® one. You will feel the mounting plate locking into the position when placed correctly on to the top.

Reseat the O-ring gasket (57x2,2mm) into the gap between the mounting plate and water block top.

> ⚠ Be careful that the orientation of the aluminum base is as shown on the picture

Reinstall the M4x12 screws and tighten them using 2,5mm Allen key to screw them in clockwise direction.

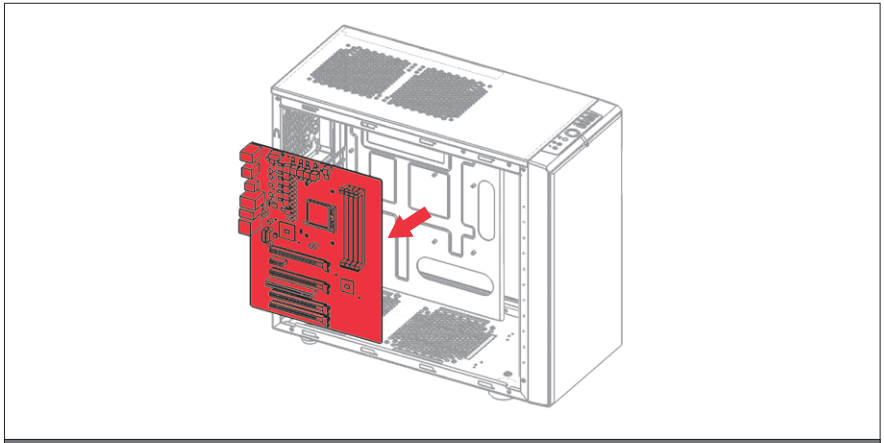

STEP 3

STEP 3

If already installed, please remove the motherboard from your computer and place it on an even surface with front facing up.

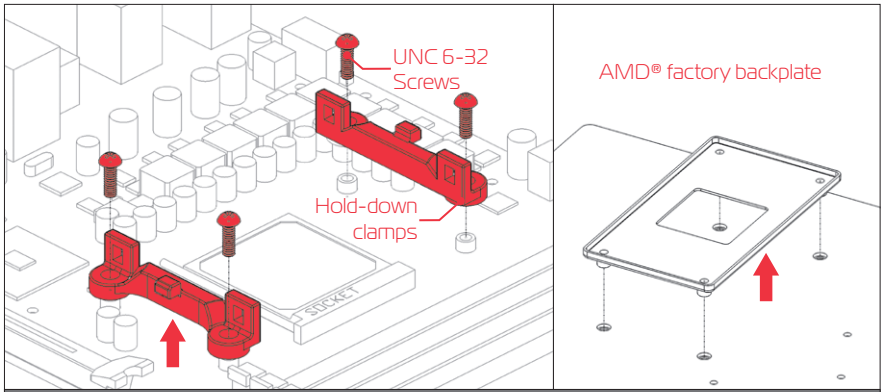

STEP 4

STEP 4

Removing of the original plastic hold-down clamps and the factory backplate:

Using Philips-head screwdriver remove the four UNC 6-32 screws securing the original plastic hold-down clamps around the socket as shown on the sketch. Remove the original AMD® backplate and the hold-down clamps and store them away. See sketch for further part identification.

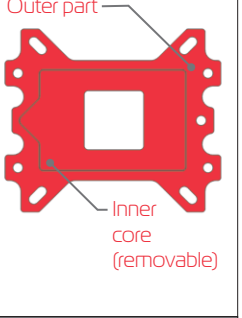

STEP 5

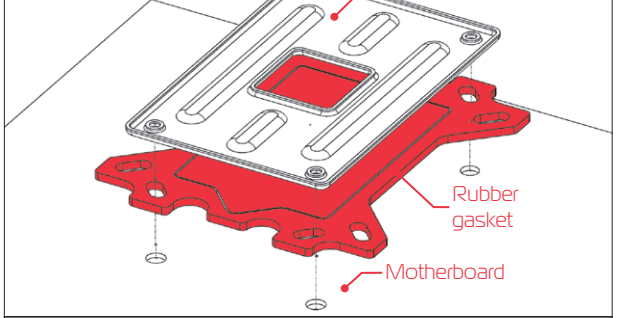

STEP 6

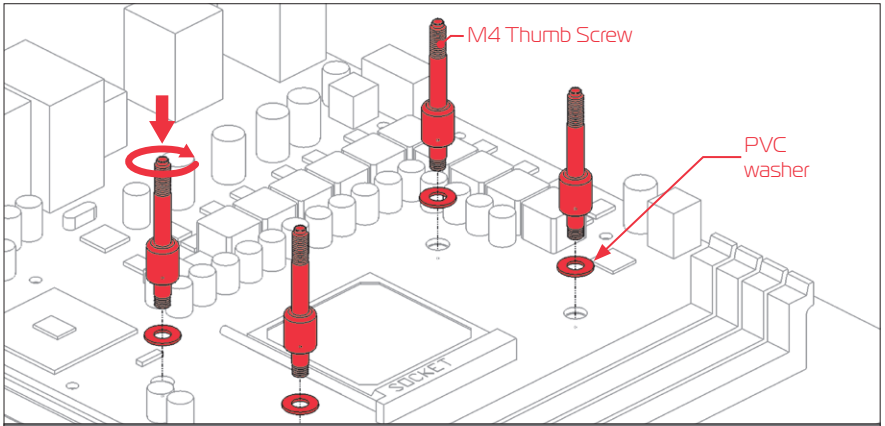

STEP 7

STEP 5

Preparing backplate rubber gasket

The enclosed rubber gasket is essential part of the backplate and mounting system and must be used every time you install this water block on your motherboard.

> ⚠ With AMD® Sockets you should use whole rubber backplate including the inner core.

STEP 6

Install backplate rubber gasket and place metal backplate for AMD® AM4 socket to the back of your motherboard RIBBED SIDE UP! (facing away from the motherboard) Align the holes on the motherboard with holes on rubber gasket and backplate.

Carefully rotate motherboard assembly with front side facing up with one hand while holding the backplate and rubber in place with the other hand.

STEP 7

Install four (4) M4 thumb screws onto your motherboard. It is mandatory to put 0.7mm plastic washer underneath each of the M4 thumb screws. Tighten the screws to the metal backplate until you reach the end of the thread. Using tools (such as pliers) is not recommended.

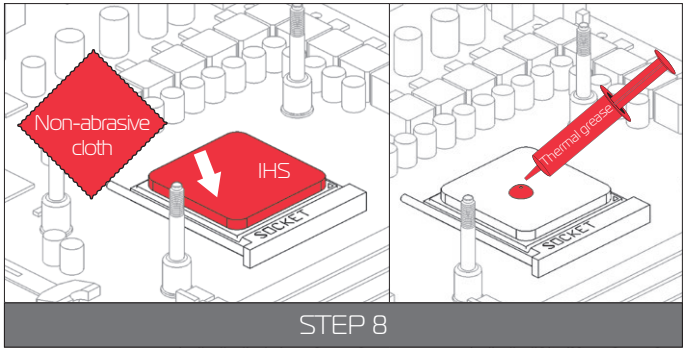

STEP 8

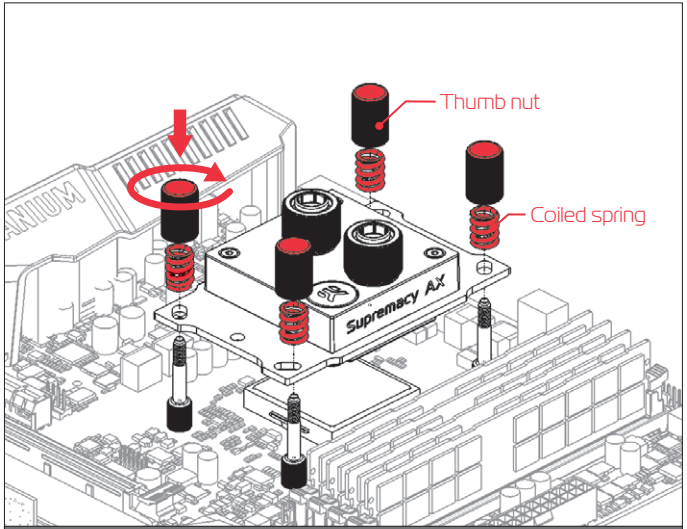

STEP 9

STEP 8

Cleaning the CPU: Wipe the CPU's contact surface (by using non–abrasive cloth or Q-tip, as shown on sample photo).

Applying thermal compound: EK recommends blob or line method of applying the enclosed EK-TIM Ectotherm thermal compound to the CPU heat spreader (IHS) - see sample photo on right.

> The quantity of about two rice grains is just about right. There is no need to cover the whole IHS. Applying too much thermal grease will have negative impact on the cooling performance!

STEP 9

Align the water block over the mounting screws on the AMD socket motherboard with pre-installed CPU.

> Before proceeding with the installation It is mandatory to remove the protective foil from the backside of the water block, as well as warning label from the front of the waterblock!

Place an enclosed coiled spring and thumb nut over each M4 thumb screw. Start fastening two thumb nuts at a time, preferably in cross pattern and do not tighten them fully until all of them are partially screwed in.
Then – using your fingers only screw in all four thumb nuts until you reach the end of the thread.

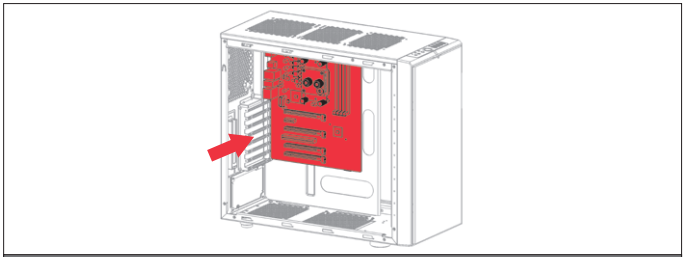

STEP 10

STEP 10

Install the CPU water block along with the motherboard back into the computer chassis.

The installation of the CPU waterblock is now complete.

INSTALLING THE RADIATOR AND FANS

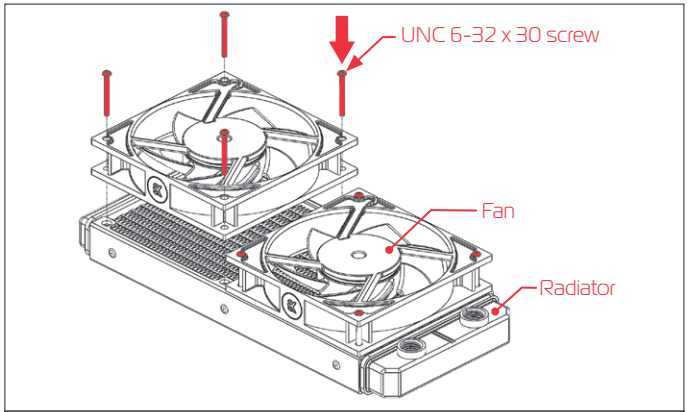

STEP 1

OPTION #1: INSTALLING THE RADIATOR AND FANS

STEP 1

Install the fans on the radiator.

> Ideally, the radiator should either:
> A) **receive the coldest air possible** (by placing the radiator on the air inlet) or
> B) **serve as an overall hot air exhaust** (by placing the radiator on the exhaust).
> The latter results in overall decrease of temperature throughout the entire computer chassis but also leads to slightly higher liquid temperatures. A reversed air flow is viable option but one should always strive to achieve unidirectional flow of air throughout the chassis.

Take the four UNC 6-32x30mm screws for each fan and screw them in. Use enclosed Allen key to tighten the screws in clockwise direction.

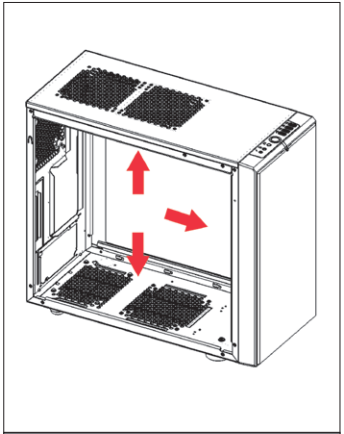

STEP 2

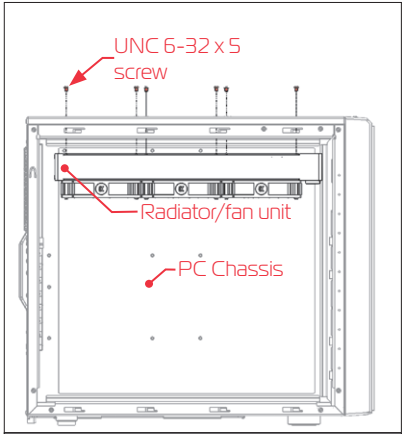

STEP 3

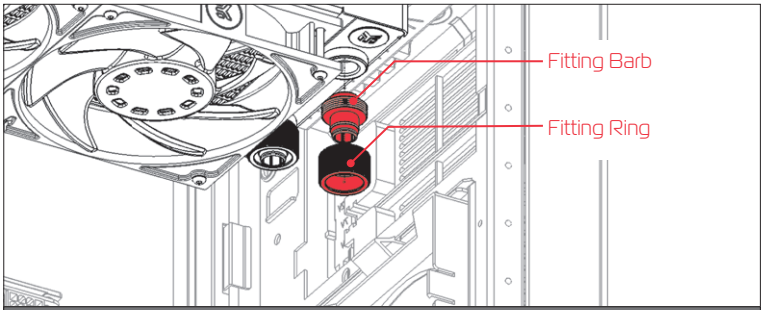

STEP 4

STEP 2

Prepare your suitably-sized PC chassis for installation of radiator unit. The position of the unit in the chassis depends on the size, fan mounting holes and the hardware you have installed. You must make sure that the unit fits into the chassis. Usually the chassis have standard fan mounting holes pre-drilled so you should look for holes with spacing of 105mm. (A standard computer cooling 120mm fan)

STEP 3

Align the holes on the radiator with the ones on the PC chassis.

Take the four UNC 6-32x5mm screws for each fan and guide them through the holes on the chassis to screw them into the threaded holes on the radiator. Tighten them in clockwise direction using Allen key.

STEP 4.:

Install the compression fitting on both G1/4 extender openings on the radiator. Tighten the fitting barbs in clockwise direction until the gasket underneath is compressed.

The installation of the radiator and radiator cooling fans is now complete.

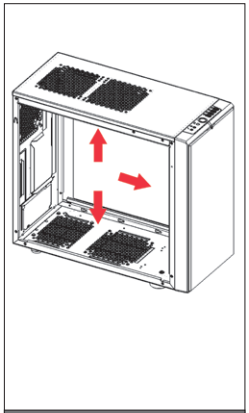

STEP 1

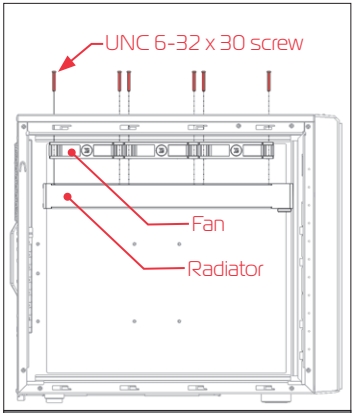

STEP 2

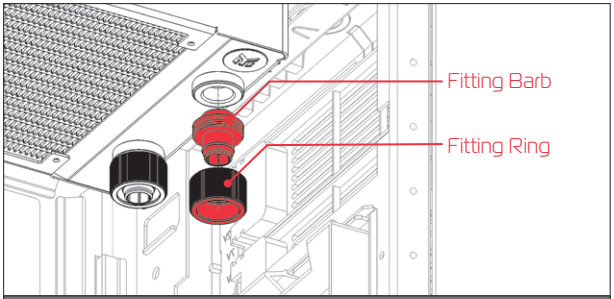

STEP 3

OPTION #2: INSTALLING THE RADIATOR AND FANS IN ONE GO

STEP 1.:

Prepare your suitably-sized PC chassis for installation of radiator unit. The position of the unit in the chassis depends on the size, fan mounting holes and the hardware you have installed. You must make sure that the unit fits into the chassis. Usually the chassis have standard fan mounting holes pre-drilled so you should look for holes with spacing of 105mm. (A standard computer cooling 120mm fan)

STEP 2.:

Align the holes on the fans and the radiator with the ones on the PC chassis.

> Ideally, the radiator should either:
> A) **receive the coldest air possible** (by placing the radiator on the air inlet) or
> B) **serve as an overall hot air exhaust** (by placing the radiator on the exhaust).
> The latter results in overall decrease of temperature throughout the entire computer chassis but also leads to slightly higher liquid temperatures. A reversed air flow is viable option but one should always strive to achieve unidirectional flow of air throughout the chassis.

Take the four UNC 6-32x30mm screws for each fan and guide them through the holes on the chassis and fans to screw them into the threaded holes on the radiator. Tighten them in clockwise direction using enclosed Allen key.

STEP 3.:

Install the compression fitting on both G1/4 extender openings on the radiator. Tighten the fitting barbs in clockwise direction until the gasket underneath is compressed.

The installation of the radiator and radiator cooling fans is now complete.

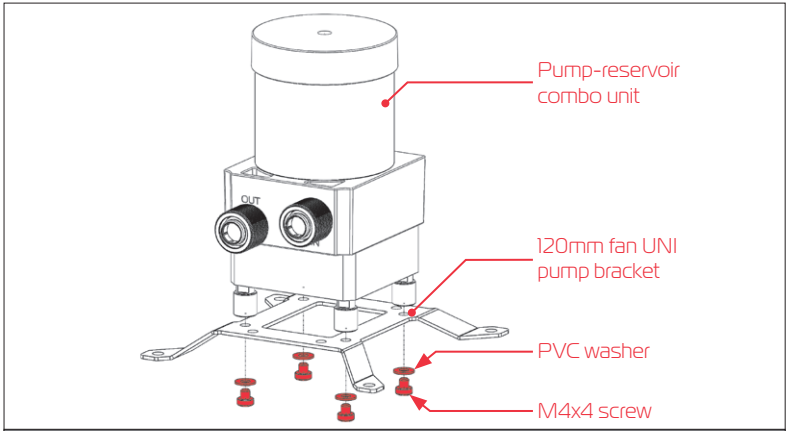

STEP 1

STEP 1

The KIT comes with combined pump and reservoir unit with pre-installed anti-vibration decouplers.

Take the unit and place it on the EK-UNI Holder DDC Spider (120mm FAN)

Secure it from the bottom side using four M4x4 screws and PVC washers. Tighten them in clockwise direction using enclosed 2,5mm Allen key.

> This unit can be installed anywhere where there is a 50x50mm square mounting hole pattern on the chassis without using any pump bracket.

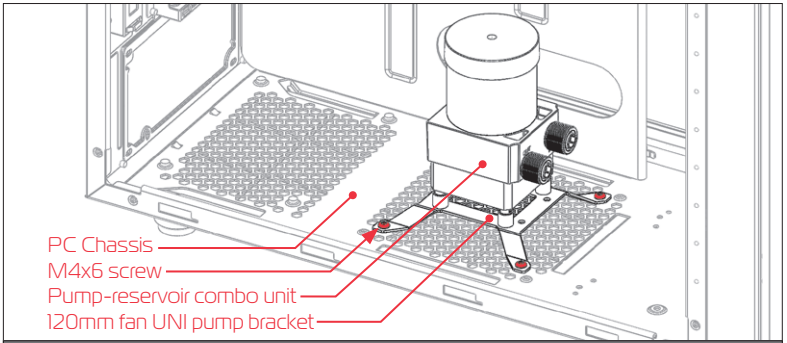

STEP 2

STEP 2

The position of the unit in the chassis depends on the fan mounting holes and the hardware you have installed. Usually the chassis have Pre-drilled standard fan mounting holes on the bottom one should look for holes with spacing of 105mm. (A standard computer cooling 120mm fan).

> Alternatively you can drill four Ø4,5mm holes using electric power drill to the most suitable place on the bottom of your computer chassis.

Put four M4x6 DIN7984 screws through the holes on the UNI pump bracket from the upper side.

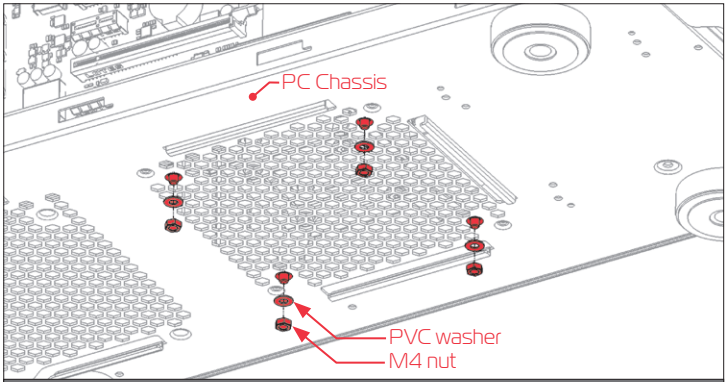

STEP 3

STEP 3

Secure the M4x6 screws (from the previous step) with four M4 nuts and PVC washers. Tighten them using 2,5mm Allen key with the screws.

Make sure that the screws are holding tight but do not exaggerate with the force applied.

INSTALLING THE GPU WATERBLOCKS

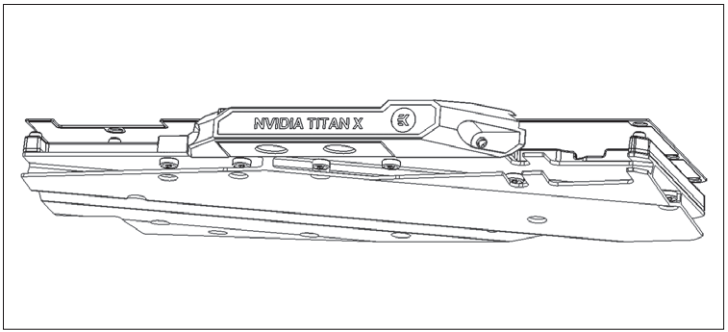

This installation manual does not cover the installation of any additional water blocks.

For installing GPU Full-cover water block to your graphic cards, please follow the instructions enclosed with the water block.

Do not forget to remove yellow warning label from the water block.

It is recommended that you use the correct INLET and OUTLET port on your GPU waterblock to ensure optimal performance.

Make sure you close the unused G1/4 threaded openings with the enclosed plugs!

CONNECTING THE TUBING

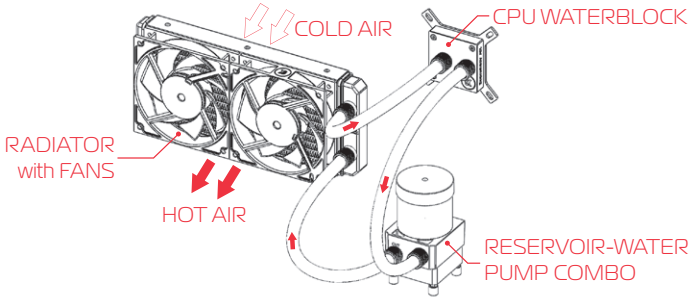

STEP 1

STEP 1

In order to successfully route the tubing it is recommended that you check the water cooling scheme on the right picture.

It is best that the water block receives the coldest fluid as possible, therefore you should connect the radiator's outlet port with the water block's inlet port. This is best practice but it is not mandatory.

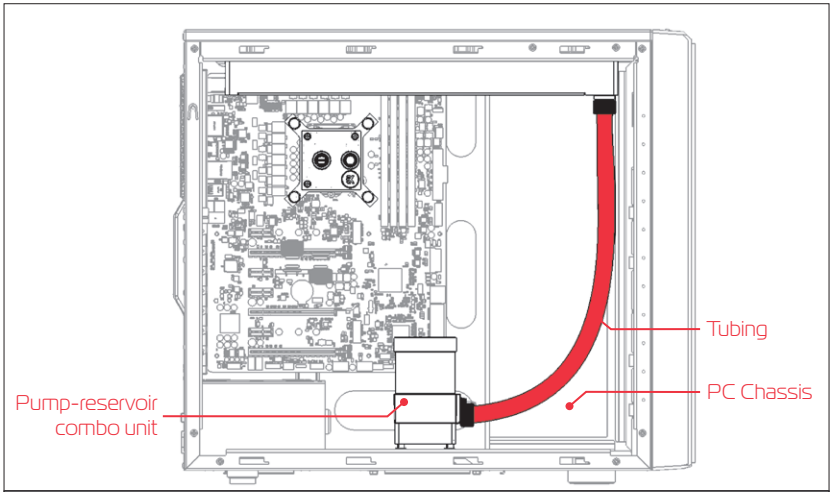

STEP 2

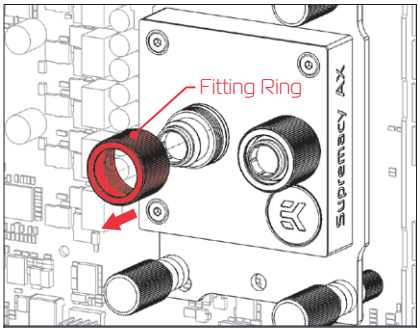

STEP3

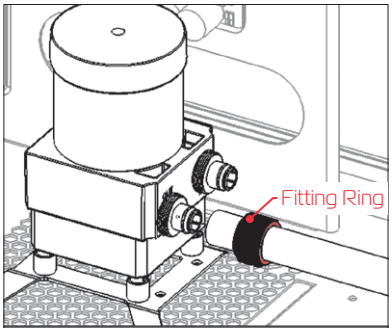

STEP4

STEP 2

Visualize the tube's routes and then measure the distance by trying to fit it into the chassis. Mark the required length with a marker. Before cutting it ˝is recommended that you leave an additional 2 or 3 centimeters to spare. You can shorten it afterwards.

> Please make sure that the tube is not bent or twisted. This way the coolant will be able to flow without restriction.

STEP 3

> If you have assembled the components according to this installation manual you should have all the compression fittings installed.

In order to install the tubing onto the compression fittings you will have to remove the fitting rings by screwing it in counter-clockwise direction.

STEP 4

Slide the fitting ring along the tube with the threaded side facing the fitting barb.

Install the tube on fitting barb. If needed heat the tube in warm water (40-50°C). You can do that by forcing it to slide over the edge as far as it goes.

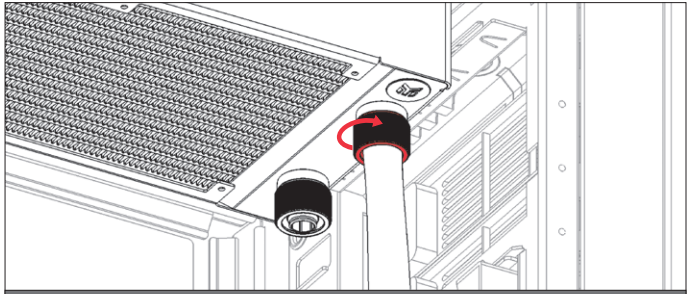

STEP5

STEP 5.:
Slide the fitting ring towards the barb and tighten it in clockwise direction as far as it goes.

Repeat the procedure on all the fittings in order to connect the water cooling loop.

The liquid cooling loop components are now connected and the cooling circuit is now complete.

ELECTRICAL CONNECTIONS

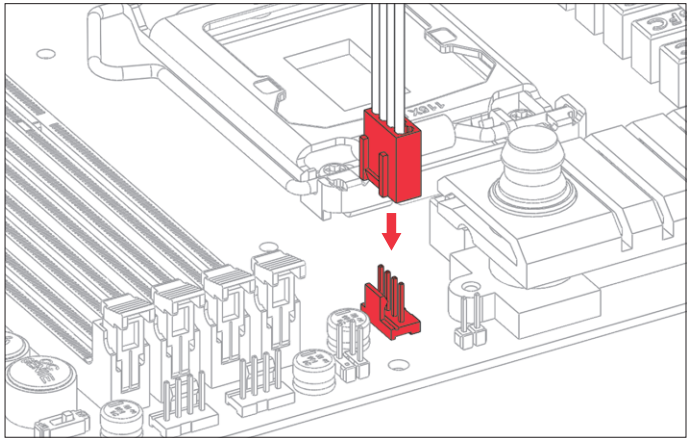

CONNECTING THE PUMP-RESERVOIR UNIT

Take the cable with 4-pin PWM (fan) connector from the pump-reservoir unit.

Plug it to the male connector header located on the motherboard. Always use CPU-dedicated fan headers if possible.

Always use CPU fan header. On majority of motherboards these headers usually offer best PWM regulation.

In order to fill the liquid cooling loop for the first time as well as do a proper leak test you should connect the pump directly to the power supply independently (without turning on your PC hardware). Please proceed to Page 24, chapter RECOMMENDED FILLING AND LEAK-TESTING PROCEDURE.

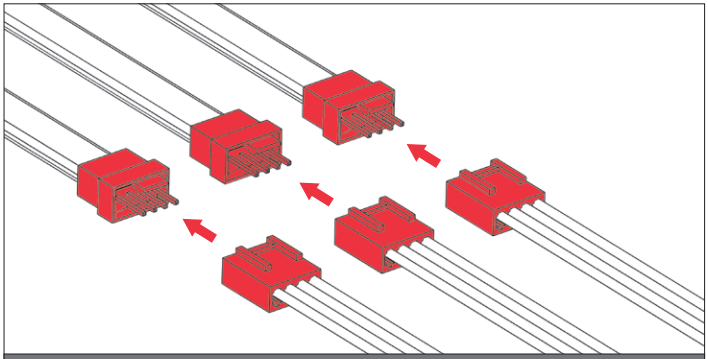

STEP 1

STEP 2

CONNECTING THE FANS

STEP 1

To connect all the fans to a single fan header you might need to use EK-Cable Y Splitter.

Connect the female connectors from the fans with male connectors on the fan splitter cable.

STEP 2

Connect the female EK-Cable Y splitter connector to the male connector header located on the motherboard. Always use CPU-dedicated fan headers if possible.

Always use CPU fan header. On majority of motherboards these headers usually offer best PWM regulation.

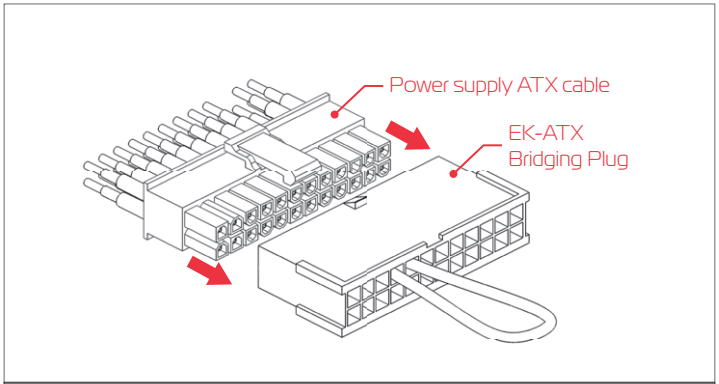

STEP 1

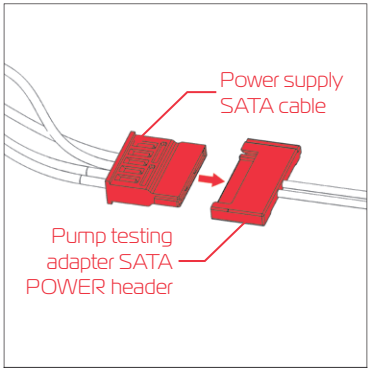

STEP 2

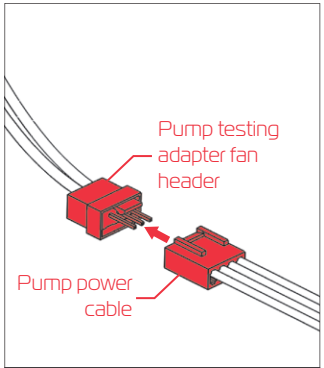

STEP 3

RECOMMENDED FILLING AND LEAK-TESTING PROCEDURE

STEP 1

It is mandatory to do the following:

1. Disconnect all PSU power connectors (4/8-pin ESP, 24-pin ATX, PCI-express power, SATA power) in your computer.
2. Plug the EK-ATX Bridging plug (enclosed) to your 24-pin ATX PSU cable which allows jump starting your computer.
3. Connect the EK-Cable Pump Testing Adapter's SATA power header to your vacant SATA power connector on your PSU (see picture under STEP2 for explanation)

This procedure requires only the pump to be connected to the power supply (PSU). Everything else needs to be disconnected!

Plug the EK-ATX Bridging plug (enclosed) to your 24-pin ATX PSU cable to jump start your computer.

STEP 2

Connect the PSU SATA power connector to the female SATA power header from the pump testing adapter.

STEP 3

It is mandatory to do the following:

1. Unplug the pump 4-pin PWM connector from the motherboard FAN header (if already installed).
2. Plug the pump 4-pin PWM connector into the male 3-pin FAN connector on enclosed EK-Cable Pump Testing Adapter (see picture under STEP3 for explanation).

Your system is now ready to be charged for the first time.

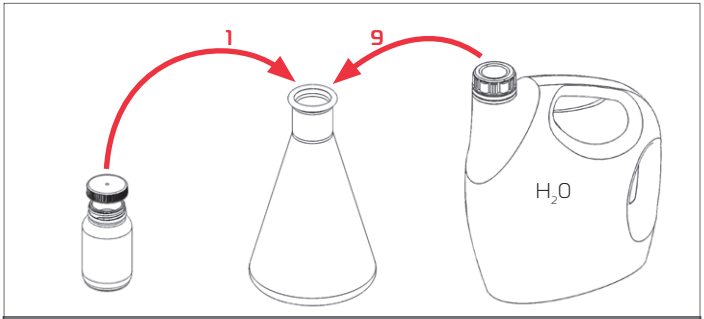

STEP 1

STEP 1: Preparing the cooling liquid.

The coolant comes in concentrated form. In order to prepare the cooling liquid you must take a 100mL clear coolant concentrate, which is enclosed with the kit, and mix it with 900mL of distilled water.

Make sure you mix the mixture properly before pouring it into the water cooling loop.

> ⚠ Store the remaining liquid into a PET bottle. Do not use any food or beverage container!

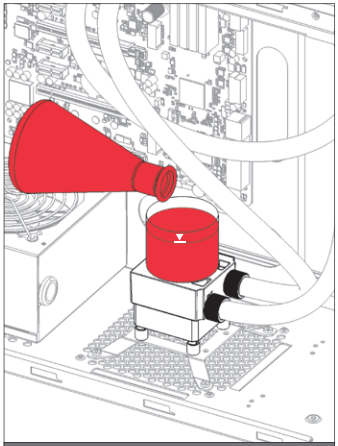

STEP 2

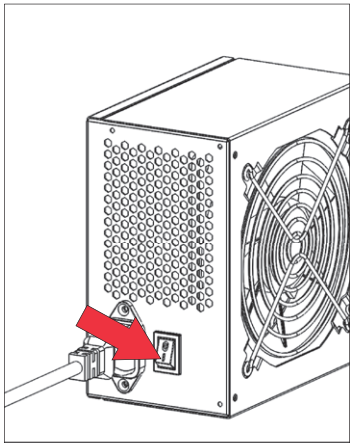

STEP 3

STEP 2

Remove the top cover of your reservoir by unscrewing it in counter-clockwise direction.

> ⚠ It is recommended to protect the exposed hardware with a few paper towels in order you have a leak or mistakenly spill the coolant when pouring it.

Take the pre-mixed coolant and pour it into the reservoir until the coolant level is about 2 centimeters below the top.

STEP 3

> ⚠ Please check again if you have plugged in the EK-ATX Bridging plug and EK-Cable Pump Testing Adapter correctly. Refer to page 24, chapter RECOMMENDED FILLING AND LEAK-TESTING PROCEDURE.

Turn the power supply on briefly and check that only the pump is running.

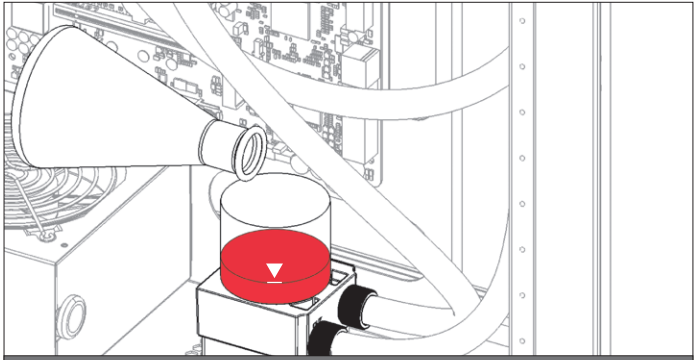

STEP 4

STEP 4

When you turn on the power supply the coolant should be pushed from the reservoir to other water cooling components, therefore you have to fill the coolant continuously while the pump is running.

> Alternatively you can cycle (turn on and off) the power supply in few second intervals to speed up the air bleeding process.

When the coolant level becomes steady fill the reservoir so that the coolant level is about 2 centimeters below the edge. Screw the reservoir top back in clockwise direction.

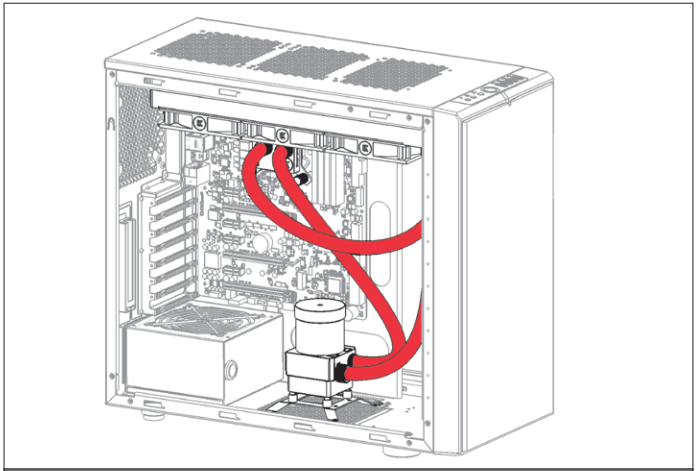

STEP 5

STEP 5

Shake and tilt the PC chassis to remove any air possibly trapped in the radiator. You may need to add more coolant.

STEP 6: 24 HOUR LEAK TEST

> It is best practice to run your pump for at least 24 hours in order to ensure the system is leak free. Once the 24 hour leak test has been completed and there is no sign of leaking fluid you are free to finish your computer build.

You will not be needing the EK-ATX Bridging Plug and EK-Cable Pump Testing Adapter anymore. Reconnect the pump – refer to page 21, chapter ELECTRICAL CONNECTIONS.

Reconnect all PSU power connections to your motherboard and periphery (4/8-pin ESP, 24-pin ATX, PCI-express power, SATA power, ...) to finish off the build.

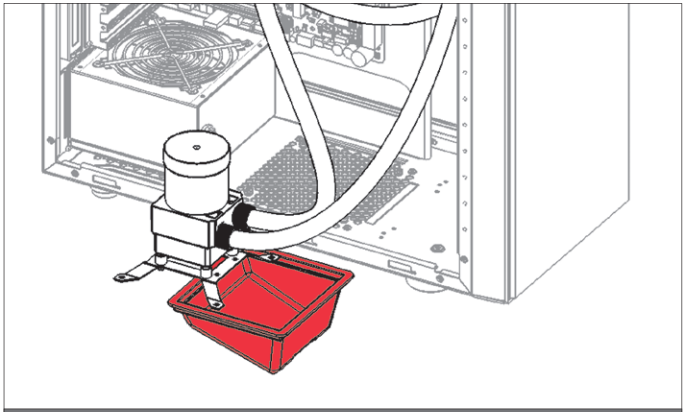

STEP 1

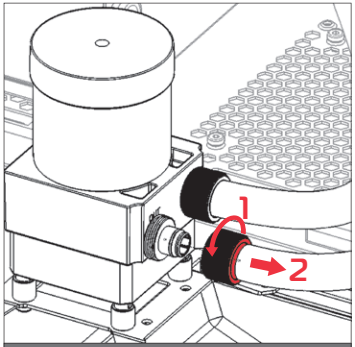

STEP 2

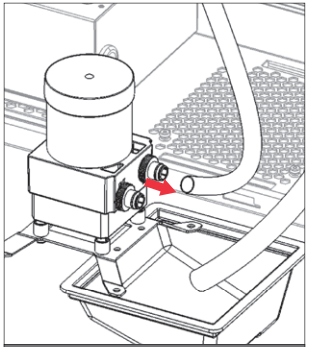

STEP 3

STEP 1

Before disassembling the water cooling loop it is mandatory turn off your computer and pull the power cord from the socket. Prepare some paper towels and stack them over the hardware.

Unscrew the four M4 nuts securing the EK-UNI Pump Bracket (120mm Fan) on the PC chassis. Slowly pull the pump-reservoir unit along with the bracket outside of the case. Do not pull the tubing off the fittings at this stage.

Take a container and put it under the Pump-reservoir unit.

STEP 2

Unscrew the fittings ring on the outlet port of the pump-reservoir unit.

Gently pull the tube off the fitting and direct it into the container.

Let the coolant flow into the container.

STEP 3

Disconnect the other tube - connected to the pump-reservoir unit inlet port.

Keep one tube directed in the container and blow into the other tube to additionally drain the system.

To thoroughly drain the pump-reservoir unit you can tilt it in multiple directions, or even remove the top cap and pour the coolant out of the reservoir.

Keep the disconnected tube ends over the paper towel to prevent the coolant spillage. You can additionally dry the tubes and the pump-reservoir to keep the hardware safe.

Q Is this kit, namely the water block, compatible with narrow server type LGA-2011 motherboard? How about older LGA-1366 and -755?

A: Narrow server type LGA-2011 is not supported by default – a Mounting plate Supremacy LGA-2011 Narrow ILM [EAN: 3830046990600] is mandatory to install this water block on narrow server type LGA-2011 motherboards. Replacing the mounting plate requires disassembly of the water block.

LGA-1366 and LGA-775 are not supported out of the box.

Q How many water blocks can you add to the loop?

A: The EK-KIT A liquid cooling unit can be upgraded with several additional parts. However in order to keep performance at a reasonable level it is recommended not to upgrade EK-KIT A with no more than:
- one (1) GPU water blocks (EK-KIT A240)

The pump itself can manage the restriction of having up to 3 GPU water blocks however the loop has to be extended with an additional radiator units.

Additional radiator can also be attached to the loop and is very recommended should a user wish to install more than 2 additional GPU water blocks.

Q What flow rates are to be expected with EK-KIT A?

A: This kit typically operates at about 180L/h (A120, A240) and 160L/h respectively.

Installing a typical GPU water block typically drop flow rates from 180L/h to about 160L/h. Adding two water blocks would result in flow rates of about 145L/h in the same scenario.

For best performance it is recommended to run the pump at 100% duty cycle in order to maintain highest flow rates (and thus thermal performance) when running more than one additional water block.

Q Can the Push-Pull Fan configuration be used with EK-KIT A?

A: Yes, this kit can take accommodate additional fans on the bottom side and thus work in push-pull regime. However, the required mounting screws are not enclosed and must be purchased separately. In order to prevent damage to the unit please use the UNC 6-32 30mm screws with standard 120x120x25mm fans!

The required set of UNC 6-32 x 30mm screws can be purchased through EK Webshop and EK Partner Reseller Network.

Q Is it possible to 'daisy-chain' the enclosed PWM splitter?

A: Yes, the enclosed PWM splitter allows for daisy-chaining of additional PWM splitter cables, such as EK-Cable Y-Splitter 2-Fan PWM (10cm) [EAN: 3831109867860], as long as the total power draw does not exceed 12W (1A on +12VDC) - the limit of KK 254 4-pin fan header on the motherboard.

Q What thermal performance is to be expected from the EK-KIT A unit?

A: The nominal cooling capacity of the EK-KIT A units is listed in the table below:

	dT=10K	dT=15K
KIT A120 *	148W	212W
KIT A240 *	296W	444W

* = Vardar 120 @ 1850rpm

The nominal capacity tells how much heat is the kit unit able to move with 10°C (10K) or 15°C (15K) increase in liquid temperature over ambient.

Example: Ideally, the KIT A240, cooling an overclocked LGA-1151 Kaby Lake Core i7 CPU (150W) and the NVIDIA GeForce GTX 1080 class GPU (225W) would achieve liquid temperatures of about 12,5°C above ambient during maximum combined (synthetic) workload. Given the ambient temperature of 22°C, this would result in liquid temperature of around 35°C in ideal situation. One can usually expect 10-15°C higher GPU core temperature (GPU 45-50°C).

The same formula works for majority of hardware as long as the correct TDP value is used.

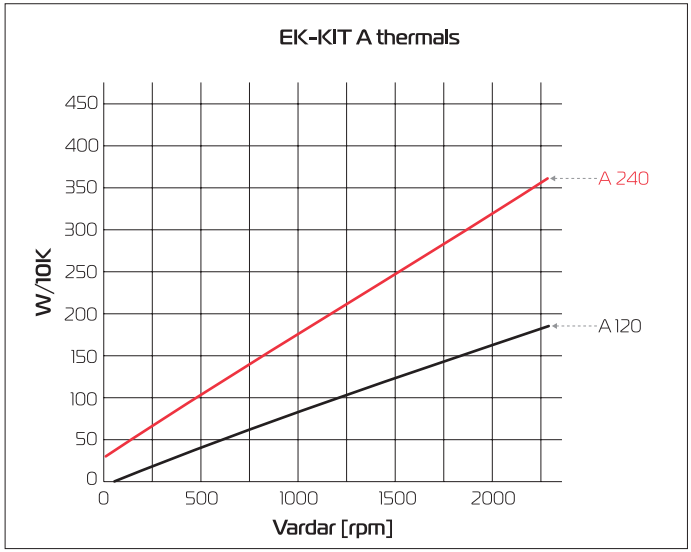

IN CASE OF CPU OVERHEATING:

Very high CPU temperatures are usually the symptoms of malfunctioning liquid cooling loop, assuming the contact between CPU heat spreader and water block itself is good and that the water itself is adequately cooled within the radiator. This can occur either due to:

1. Malfunctioning or non-working water pump: The symptoms usually include rapid spike in temperature when stressing your CPU to the maximum (for example with Prime95 software). Make sure the pump is plugged in to the power connector and that the liquid is indeed flowing in your system. You should feel the pump vibrating in your hand. Observe the flow indicator or flow meter reading if present.

2. Malfunctioning or non-working cooling fans: The symptoms usually include rapid spike in temperature when stressing your CPU to the maximum. Make sure the cooling fans are plugged in to the power connector hub and that the blades are indeed rotating.

3. Kink in the liquid cooling tubing: Very similar symptoms to both above described. Thin-walled tubing may collapse easily under low radius turns or when obstructed by other computer chassis elements such as closing side panel doors. Check the tubing for any signs of kink which restrict the flow. This is normally not the case when using original tubing.

4. Clogged microchannels in the water block: Microchannels can get clogged easily with various dirt particles and impurities, especially with plasticizer powder which has leached from the tubing (When using unsafe liquid cooling tubing). The symptoms usually include rapid spike in temperature when stressing your CPU to the maximum, flow rates are very low. Visually inspect the water block internals for any buildup or contamination and clean the system if necessary. In case the water block with translucent acrylic top is employed this inspection can be done without disassembling the system.

5. Thermal interface material (paste/grease) not applied or applied improperly: Lack of - or even too much TIM - may result in CPU overheating. Please refer to STEP 2 in Installing the water block section.

6. Cooling liquid (coolant) freezing: Running the system in an subzero temperature environment may lead to liquid freezing. The symptoms include initial rapid spike in the temperatures when stressing your CPU, followed by substantial drop after the liquid partially thaws. Always make sure the system is operating in an environment where ambient (room) temperature doesn't drop below 5°C.

Another culprit could be partially or completely defective CPU. Some CPUs run at higher temperatures than the others. Overheating of the CPU can also occur due to:

7. Poor thermal contact within the CPU itself: Some CPUs, such as Intel LGA-1151 socket based Kaby Lake/Skylake, Intel LGA-1150 based Haswell and older, socket LGA-1155 based Ivy Bridge are notorious for their poor thermal contact between the CPU die and the heat spreader (IHS) itself due to the use of poor TIM. This is the problem of the processor and not the CPU liquid cooling unit. These CPUs are known to run very hot (80°C+) even on factory set frequencies. For best performance it is usually recommended to replace the TIM between the die and the IHS or to even run the processor de-lidded. Both require hazardous IHS removal which voids processor's warranty but can lead to temperature decrease of 30°C and higher.

EKWB deems der8auer Delid Die Mate tool safe to be used by experts for de-lidding of the Intel Skylake CPUs.

Upon exhausting all options please consult EK knowledge base at http://support.ekwb.com . Raise a question through EK Support ticketing system if needed.

THE COOLER IS TOO LOUD

This kit is equipped with fast-spinning EK-Vardar high-static pressure PWM controlled fans, which run at very high speed if the UEFI/BIOS is not set to control fan speed. Make sure to set control mode to PWM (instead of DC)! On majority of motherboards this feature can be found in 'Hardware Monitoring' section of the UEFI/BIOS. Please consult your motherboard manual on how change fan speed.

General ASUS Z270/X99 motherboard guide:

1. Enter UEFI and go to QFAN Control
2. Select the FAN header you wish to edit (the one that you have connected the Predator's PWM cable to)
3. Select PWM mode (instead of DC)

General ASRock Z270/X99 motherboard guide:

1. Enter UEFI and go to H/W Monitor
2. Choose the FAN header you wish to edit (the one that you have connected the Predator's PWM cable to)
3. Change from 'Full Speed' to 'Silent', 'Standard' or 'Performance' mode

General Gigabyte Z270/X99 motherboard guide:

1. Enter UEFI and go to M.I.T. - > PC Health Status
2. Select (CPU Fan) Speed Control optionbox and select 'Auto', 'Normal' or 'Manual'.

General MSI Z270/X99 motherboard guide:

1. Enter UEFI and go to Hardware Monitor
2. Select the FAN header you wish to edit (the one that you have connected the Predator's PWM cable to)
3. Enable Smart Fan Mode Checkbox
4. Change ramp-up curve by dragging and dropping 4 colored squares

Make sure the 4-pin PWM Fan connector is indeed plugged in correctly into the appropriate FAN header on your motherboard. Please consult page 22, chapter ELECTRICAL CONNECTIONS.

GENERAL LIQUID COOLING PARTS CLEANING GUIDE

Liquid cooling parts may be disassembled for cleaning purposes on an occasional basis. Your warranty is not voided on disassembly of the water block but the customer loses the EK leak-free guarantee which comes with a factory tested Component. And old, but soft toothbrush is an excellent cleaning tool!

1. Cleaning aluminum: When cleaning bare aluminum is it recommended to use slightly acidic cleaning agents which include the following organic agents:
- (white) vinegar (acetic acid up to 5-10%)
- lemon juice (citric acid up to 5-10%)

Certain food can also be used for cleaning aluminum:
- cola (contains phosphorous- and citric acid)
- ketchup or tomato extract (contains acetic- and citric acid)
- mustard (contains acetic acid)

5% vinegar , diluted with 95% water is enough to kill 99.9% of algae and bacteria that could be present on aluminum in an unmaintained cooling loop as well.

Upon cleaning is it necessary to flush the water blocks in water and rinse them with distilled water. After rinsing we recommend soaking the water blocks in paper towels until completely dry. It is nearly impossible to avoid the naturally occurring aluminum tarnishing (oxidation) as the oxidation will reoccur the moment the aluminum is cleaned of the all oxides.

2. Metal polishing: EK recommends the use of automotive soft, non-abrasive metal polish cremes. After you finish using other cleaning methods, give the nickel plating a good polish with a non-abrasive metal or chrome polish. Apply a small amount of polish to a cloth or to the surface of the nickel. Wipe the entire surface of the nickel with the polish, using small circular motions, until it looks shiny and clean. Use another clean cloth to remove the remains of the polishing paste from the surface. Always rinse with distilled water after you are done with polishing.

3. Cleaning acrylic (plexi) glass tops:

Acrylic will fail prematurely if subjected to even small amounts of alcohol, acetone or other aggressive chemicals.

Please do not use anything but warm, soapy water and a toothbrush to clean the acrylic (plexi) glass water block tops and reservoir tubes. Using aggressive chemicals will surely void your warranty!

Algae- or dirt deposits may be rubbed out using soft cloth in combination with warm, soapy water. Rinse with distilled water after cleaning.

4. Cleaning POM (acetal) tops: POM (polyoxymethylene) or Acetal can withstand chemicals such as alcohol or acetone but EK recommend to use these very sparingly as the drying chemicals will surely leave some residue. Usually the POM can be cleaned easily just be the use of soft cloth and warm, soapy water - without the use of any chemicals. Rinse with distilled water after cleaning.

PREVENTIVE STEPS

1. Using corrosion inhibiting coolant (such as EK-CryoFuel or other market proven coolant) is highly recommended for any water cooling loops. Since EK-CryoFuel is also a surfactant is will prevent algae growth and dirt deposition on all wettered surface.

2. Refrain from using Copper Sulphate based additives in your loop in order to prevent tarnishing on your water cooling gear internals!

3. Never use anything other than aluminum liquid cooling components with this kit! Galvanic corrosion can be prevented by following this simple guideline.

SUPPORT AND SERVICE

For assistance please contact:
http://support.ekwb.com/

EKWB d.o.o.
Pod lipami 18
1218 Komenda
Slovenia - EU

SOCIAL MEDIA

EKWaterBlocks

@EKWaterBlocks

ekwaterblocks

EKWBofficial

ekwaterblocks