CVI338LX3

Wine Cooler, Classic, Built-in, Hinge position: Left, Stainless steel, 38, G

TYPE

Product Family: Wine Cooler • Installation: Built-in • Built-In Niche: 82-87 cm • Cooling type: Fan assisted • Defrost: Automatic • Hinge type: Standard • Hinge position: Left • EAN code: 8017709293932

AESTHETICS

Colour: Stainless steel • Finishing: Fingerproof • Aesthetics: Classic • Glass colour: Black • Glass type: Eclipse • Door: Glass with 2 horizontal strips • Door steel type: Finger proof • Door opening type: With handle • Side colour: Stainless steel • Side material: Painted metal sheet • Handle: Classic • Handle colour: Stainless steel • Handle material: Stainless steel

WINE CELLAR COMPARTMENT FEATURES

Max Capacity (bottles 0,75lt): 38 • Number of removable shelves: 3 • Number of fixed shelves: 2 • Shelves material: Wood • Removable shelves on telescopic guide rails: Yes • Type of internal light: LED • Air filter: Activated charcoal filter

PROGRAMME / FUNCTIONS

Controls: Inner, in the cellar compartment • Control setting: Touch control • Display: LED • Power on lamp: Yes • Functions display: Temperature alarm, Temperature value • Door open alarm: Yes • Fan forced ON: Yes • Lighting forced ON: In a maximum period • Control lock: Yes • Temperature Alarm: Yes

TECHNICAL FEATURES

Anti-UV door glass: Yes • Adjustable temperature zones: 2 • Independent cooling systems: 2 • Number of door glasses: 2 • Temperature range: 5-20 °C • Integrated heating element: Yes • Adjustable feet: 2 Front + 2 Rear • Type of temperature control: Electronic • Number of compressors: 1 • Compressor type: Low vibration compressor • Metal panel on the back of the fridge: Metal

PERFORMANCE / ENERGY LABEL NEW

Annual energy consumption: 140 KWh/year • Energy efficiency class: G • Airborne acoustical noise emission class: C • Total volume: 114 l • Sum of the volumes of the chill compartment(s) and the unfrozen compartment(s): 114 l • Climatic class: SN, N, ST • EEI: 165 %

ELECTRICAL CONNECTION

Nominal power: 40 W • Voltage (V): 220-240 V • Frequency (Hz): 50 Hz • Power supply cable length: 150 cm

LOGISTIC INFORMATION

Dimensions of the product HxWxD (mm): 825x595x566 • Width: 595 mm • Product width with maximum doors opening: 693 mm • Depth without handle: 566 mm • Height with feet: 820 mm

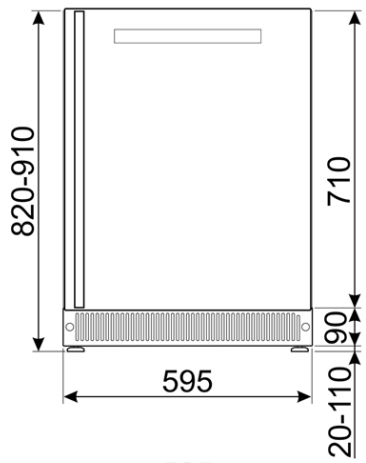
820-910
710
90
595
20-110

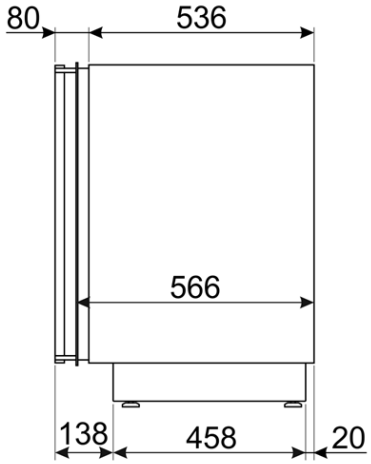
80
536
566
138
458
20

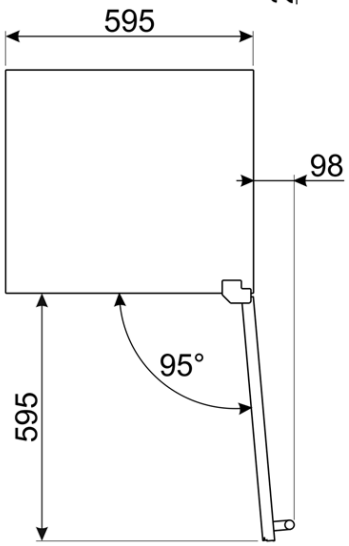
595
98
95°
595

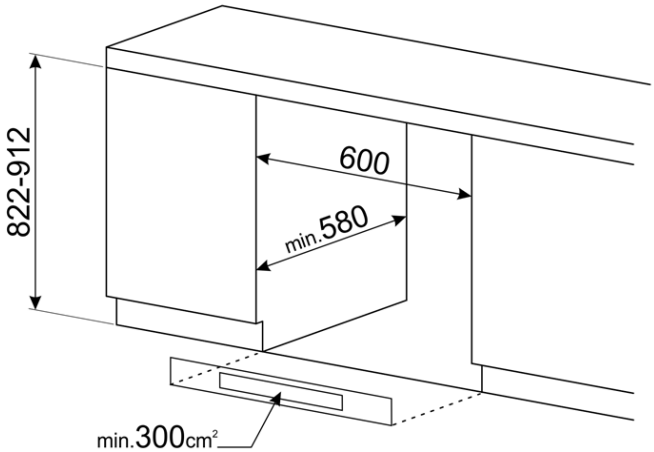
822-912
600
min.580
min.300cm²