FPMA-D700DDV

Neomounts by Newstar Tilt/Turn/Rotate Dual Desk Mount (stand & grommet) for two 10-27" Monitor Screens ONE ABOVE OTHER, Height Adjustable - Black

NEOMOUNTS BY NEWSTAR MONITOR DESK

SPECIFICATIONS

Color	Black
Depth	13 cm
Height	0 - 70 cm
Max. screen size	27
Max. weight	6
Min. screen size	10
Min. weight	0
Rotate (degrees)	360°
Screens	2
Swivel (degrees)	180°
Tilt (degrees)	180°
Type	Full motion Tilt Rotate Swivel
VESA maximum	100x100 mm
VESA minimum	75x75 mm
VESA pattern	100x100 75x75
Warranty	5 year
EAN code	8717371444181

The Neomounts by Newstar desk mount, model FPMA-D700DDV is a tilt-, swivel and rotatable desk mount for 2 flat screens up to 27". This mount is a great choice for space saving placement on desks using a desk stand or grommet mount.

Neomounts by Newstar's versatile tilt (180°), rotate (360°) and swivel (180°) technology allows the mount to change to any viewing angle to fully benefit from the capabilities of the flat screen. The mount is manually height adjustable from 0 to 70 centimetres. Depth 13 centimetres.

Neomounts by Newstar FPMA-D700DDV has two pivot points and is suitable for screens up to 27" (69 cm). The weight capacity of this product is 6 kg each screen. The desk mount is suitable for screens that meet VESA hole pattern 75x75 or 100x100mm. Different hole patterns can be covered using Neomounts by Newstar VESA adapter plates.

By using an ergonomic mount neck- and back complaints can be avoided. Ideal for use in offices and on counters or in a reception area.

All installation material is included with the product.

Neomounts®
BY NEWSTAR
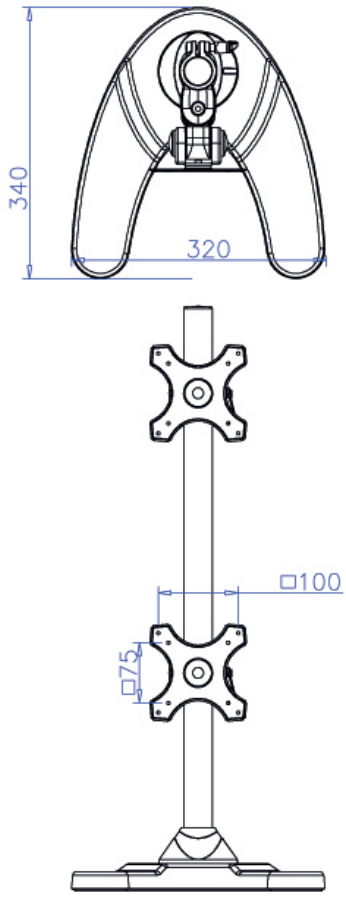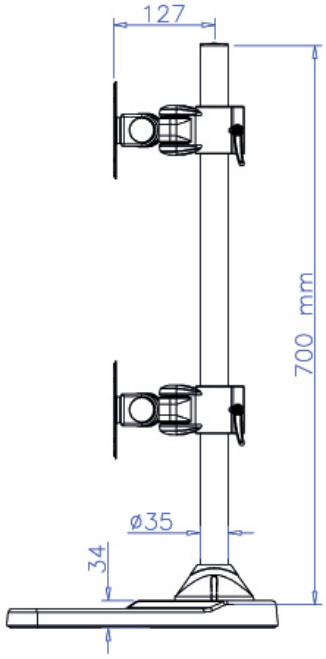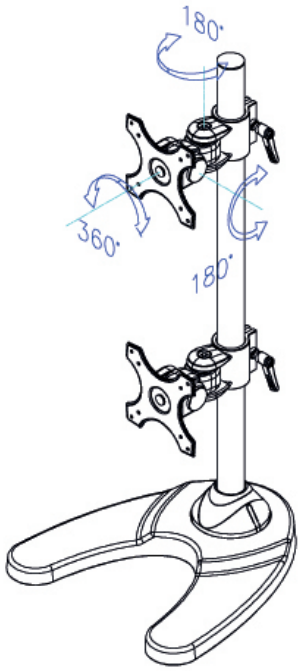
FPMA-D700DDV NEOMOUNTS BY NEWSTAR MONITOR DESK