PROLITE XB2776QS-B1

27" LCD screen with ultra-high resolution

The XB2776QS is not just a large monitor. This LCD with LED-backlit display features a massive QHD 2560x1440 resolution with IPS technology. Due to these outstanding features it offers a very high performance with accurate and consistent colour reproduction, colour fidelity, contrast and fast response time. An array of inputs including HDMI, DisplayPort, DVI and VGA connections ensure compatibility across a range of devices. The XB2776QS comes with a Height Adjustable stand and is able to pivot, a function that is made even more effective by the wide viewing angles of 178° / 178° and almost no off-angle colour shift.

1. DISPLAY CHARACTERISTICS

DIAGONAL	27"; 68.5cm
PANEL	AH-IPS LED-backlit
DISPLAY AREA H X W	335.7 x 596.7 mm; 13.2" x 23.5"
RESPONSE TIME	5 ms
CONTRAST	1 000 : 1 typical
CONTRAST	5 000 000 : 1 ACR
BRIGHTNESS	350 cd/m² typical
VIEWING ZONE	horizontal/vertical: 178° / 178° ; right/left: 89° / 89° ; up/down: 89° / 89°
DISPLAY COLOUR	16.77 million
PIXEL PITCH H X V	0.233 x 0.233 mm
NATIVE RESOLUTION	2560 x 1440 (3.7 megapixel)
HORIZONTAL SYNC	30 - 80 KHz
VERTICAL SYNC	55 - 75 Hz
SYNCHRONIZATION	Separate Sync
ASPECT RATIO	16 : 9
COLOUR RANGE	AdobeRGB: 86%, sRGB: 116%, 82% (NTSC)

2. INTERFACES & CONNECTORS

ANALOG INPUT CONNECTOR	VGA
DIGITAL INPUT CONNECTOR	DVI-D, HDMI, DisplayPort
HDCP	yes;
HEADPHONE CONNECTOR	Yes
OUTPUT CONNECTOR	headphone socket

3. SPECIAL FEATURES

APPLE - MAC	All iiyama monitors are compatible with Apple-Macintosh computers.
PLUG & PLAY	VESA DDC2B™
CONTROLS	Via OSD in 9 languages (EN, DE, FR, ES, IT, NL, Chinese, RU, JP) and 5 front controls (Power, Menu/ Select, +/ Volume, -/ ECO, Input/ Exit)
USER CONTROLS	picture (brightness, contrast, H. position, V. position, phase, clock, colour temp., auto adjust), OSD (H. position, V. position, time out, transparency), display (display mode, i-Style colour, ACR, ECO, sharpness, OD, gamma), audio (volume, mute, audio input), miscellaneous (language, input select, opening logo, after AC cut, reset), information
SPEAKERS	2 x 1.5 W (Stereo)
ANTI-THEFT-DEVICE	Kensington-lock™ prepared
CERTIFICATES	CE, TUV-GS, VCCI-B, PSE, TCO 6, CU
HEIGHT ADJUSTABLE STAND	Yes
HEIGHT ADJUSTMENT	110 mm

ROTATION (PIVOT FUNCTION)	90 °
SWIVEL STAND	340°; 170° left; 170° right
TILT ANGLE	24° up; 4° down
VESA MOUNTING	100 x 100 mm
COLOUR	Black

4. ACCESSORIES

DRIVER	Windows 95 / 98 / 2000 / ME / XP / Vista/ 7/ 8
INCLUDED ACCESSORIES	power cable, DVI-D cable (dual-link), audio cable, stand, screw (x2), quick start guide, safety guide

5. POWER MANAGEMENT

POWER SUPPLY	AC 100 - 240 V, 50 / 60 Hz
POWER SUPPLY UNIT	internal
POWER USAGE	43 W typical; max. 0.5 W in Power management mode
POWER MANAGEMENT	VESA DPMS, ENERGY STAR®

6. EPEAT SILVER

EPEAT	EPEAT is a comprehensive environmental rating that helps identify greener computers and other electronic equipment. The Silver certification means the monitor meets all required criteria plus at least 50% of the optional requirements. EPEAT Silver is valid in countries where iiyama registers the product. Please visit www.epeat.net for the registration status in your country.

7. DIMENSIONS & WEIGHT

DIMENSIONS W X H X D	644 x 455 (565) x 249.5 mm
WEIGHT	8.8 kg

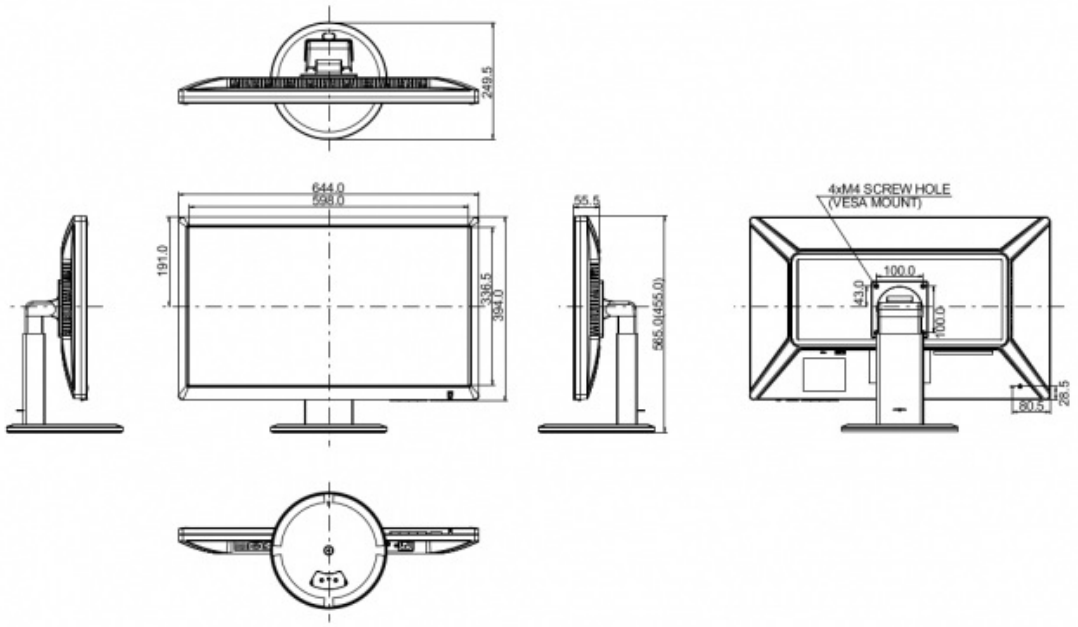

All trademarks and registered trademarks acknowledged. E & O E. Specification subject to change without notice. All LCD's comply with ISO-9241-307:2008 in connection with pixel defects.

© IIYAMA CORPORATION ( ). ALL RIGHTS RESERVED.