WS C246 PRO

Motherboard

E15394
Revised Edition V5
September 2019

Copyright© 2019 ASUSTeK COMPUTER INC. All Rights Reserved.

No part of this manual, including the products and software described in it, may be reproduced, transmitted, transcribed, stored in a retrieval system, or translated into any language in any form or by any means, except documentation kept by the purchaser for backup purposes, without the express written permission of ASUSTeK COMPUTER INC. (“ASUS”).

Product warranty or service will not be extended if: (1) the product is repaired, modified or altered, unless such repair, modification of alteration is authorized in writing by ASUS; or (2) the serial number of the product is defaced or missing.

ASUS PROVIDES THIS MANUAL “AS IS” WITHOUT WARRANTY OF ANY KIND, EITHER EXPRESS OR IMPLIED, INCLUDING BUT NOT LIMITED TO THE IMPLIED WARRANTIES OR CONDITIONS OF MERCHANTABILITY OR FITNESS FOR A PARTICULAR PURPOSE. IN NO EVENT SHALL ASUS, ITS DIRECTORS, OFFICERS, EMPLOYEES OR AGENTS BE LIABLE FOR ANY INDIRECT, SPECIAL, INCIDENTAL, OR CONSEQUENTIAL DAMAGES (INCLUDING DAMAGES FOR LOSS OF PROFITS, LOSS OF BUSINESS, LOSS OF USE OR DATA, INTERRUPTION OF BUSINESS AND THE LIKE), EVEN IF ASUS HAS BEEN ADVISED OF THE POSSIBILITY OF SUCH DAMAGES ARISING FROM ANY DEFECT OR ERROR IN THIS MANUAL OR PRODUCT.

SPECIFICATIONS AND INFORMATION CONTAINED IN THIS MANUAL ARE FURNISHED FOR INFORMATIONAL USE ONLY, AND ARE SUBJECT TO CHANGE AT ANY TIME WITHOUT NOTICE, AND SHOULD NOT BE CONSTRUED AS A COMMITMENT BY ASUS. ASUS ASSUMES NO RESPONSIBILITY OR LIABILITY FOR ANY ERRORS OR INACCURACIES THAT MAY APPEAR IN THIS MANUAL, INCLUDING THE PRODUCTS AND SOFTWARE DESCRIBED IN IT.

Products and corporate names appearing in this manual may or may not be registered trademarks or copyrights of their respective companies, and are used only for identification or explanation and to the owners’ benefit, without intent to infringe.

Offer to Provide Source Code of Certain Software

This product contains copyrighted software that is licensed under the General Public License (“GPL”), under the Lesser General Public License Version (“LGPL”) and/or other Free Open Source Software Licenses. Such software in this product is distributed without any warranty to the extent permitted by the applicable law. Copies of these licenses are included in this product.

Where the applicable license entitles you to the source code of such software and/or other additional data, you may obtain it for a period of three years after our last shipment of the product, either

(1) for free by downloading it from https://www.asus.com/support/

or

(2) for the cost of reproduction and shipment, which is dependent on the preferred carrier and the location where you want to have it shipped to, by sending a request to:

ASUSTeK Computer Inc.

Legal Compliance Dept.

15 Li Te Rd.,

Beitou, Taipei 112

Taiwan

In your request please provide the name, model number and version, as stated in the About Box of the product for which you wish to obtain the corresponding source code and your contact details so that we can coordinate the terms and cost of shipment with you.

The source code will be distributed WITHOUT ANY WARRANTY and licensed under the same license as the corresponding binary/object code.

This offer is valid to anyone in receipt of this information.

ASUSTeK is eager to duly provide complete source code as required under various Free Open Source Software licenses. If however you encounter any problems in obtaining the full corresponding source code we would be much obliged if you give us a notification to the email address **gpl@asus.com**, stating the product and describing the problem (please DO NOT send large attachments such as source code archives, etc. to this email address).

Contents

Safety information ..... **vi**
About this guide ..... **vii**
WS C246 PRO specifications summary ..... **ix**
Package contents ..... **xi**
Installation tools and components ..... **xii**

Chapter 1: Product Introduction

1.1 Motherboard overview **1-1**
1.1.1 Before you proceed 1-1
1.1.2 Motherboard layout 1-2
1.1.3 Central Processing Unit (CPU) 1-4
1.1.4 System memory 1-5
1.1.5 Expansion slots 1-7
1.1.6 Onboard buttons and switches 1-9
1.1.7 Jumpers 1-10
1.1.8 Onboard LEDs 1-11
1.1.9 Internal connectors 1-13

Chapter 2: Basic Installation

2.1 Building your PC system **2-1**
2.1.1 CPU installation 2-1
2.1.2 Cooling system installation 2-3
2.1.3 Motherboard installation 2-4
2.1.4 DIMM installation 2-6
2.1.5 ATX power connection 2-7
2.1.6 SATA device connection 2-8
2.1.7 Front I/O connector 2-9
2.1.8 Expansion card installation 2-10
2.1.9 M.2 installation 2-11
2.2 BIOS update utility **2-12**
2.3 Motherboard rear and audio connections **2-14**
2.3.1 Rear I/O connection 2-14
2.3.2 Audio I/O connections 2-16
2.4 Starting up for the first time **2-18**
2.5 Turning off the computer **2-18**

Contents

Chapter 3: BIOS Setup

3.1 Knowing BIOS 3-1

3.2 BIOS setup program 3-2

3.2.1 EZ Mode 3-3

3.2.2 Advanced Mode 3-4

3.2.3 Q-Fan Control 3-7

3.2.4 EZ Tuning Wizard 3-9

3.3 My Favorites 3-11

3.4 Main menu 3-13

3.5 Ai Tweaker menu 3-13

3.6 Advanced menu 3-14

3.6.1 Platform Misc Configuration 3-14

3.6.2 CPU Configuration 3-14

3.6.3 System Agent (SA) Configuration 3-14

3.6.4 PCH Configuration 3-14

3.6.5 PCH Storage Configuration 3-15

3.6.6 PCH-FW Configuration 3-16

3.6.7 Onboard Devices Configuration 3-16

3.6.8 APM Configuration 3-16

3.6.9 USB Configuration 3-16

3.6.10 Network Stack Configuration 3-17

3.6.11 NVMe Configuration 3-17

3.6.12 HDD/SSD SMART Information 3-17

3.7 Monitor menu 3-17

3.8 Boot menu 3-17

3.9 Tool menu 3-19

3.9.1 ASUS EZ Flash 3 Utility 3-19

3.9.2 ASUS Secure Erase 3-20

3.9.3 ASUS User Profile 3-21

3.9.4 ASUS SPD Information 3-21

3.9.5 Graphics Card Information 3-21

3.10 Exit menu 3-22

3.11 Updating BIOS 3-22

3.11.1 EZ Update 3-22

3.11.2 ASUS EZ Flash 3 3-23

3.11.3 ASUS CrashFree BIOS 3 3-25

Contents

Chapter 4: RAID Support

4.1 RAID configurations 4-1

4.1.1 RAID definitions 4-1

4.1.2 Installing storage devices 4-2

4.1.3 Intel® Rapid Storage Technology in UEFI BIOS 4-2

4.1.4 Intel® Rapid Storage Technology Option ROM utility 4-6

4.2 Creating a RAID driver disk 4-10

4.2.1 Creating a RAID driver disk in Windows® 4-10

Chapter 5: Multi GPU Support

5.1 AMD CrossFireX™ technology 5-1

5.1.1 Requirements 5-1

5.1.2 Before you begin 5-1

5.1.3 Installing two CrossFireX™ graphics cards 5-2

5.1.4 Installing three CrossFireX™ graphics cards 5-3

5.1.5 Installing the device drivers 5-4

5.1.6 Enabling the AMD CrossFireX™ technology 5-4

Appendix

WS C246 PRO block diagram A-1

Q-Code table A-2

Notices A-5

ASUS contact information A-9

Safety information

Electrical safety

- To prevent electrical shock hazard, disconnect the power cable from the electrical outlet before relocating the system.
- When adding or removing devices to or from the system, ensure that the power cables for the devices are unplugged before the signal cables are connected. If possible, disconnect all power cables from the existing system before you add a device.
- Before connecting or removing signal cables from the motherboard, ensure that all power cables are unplugged.
- Seek professional assistance before using an adapter or extension cord. These devices could interrupt the grounding circuit.
- Ensure that your power supply is set to the correct voltage in your area. If you are not sure about the voltage of the electrical outlet you are using, contact your local power company.
- If the power supply is broken, do not try to fix it by yourself. Contact a qualified service technician or your retailer.

Operation safety

- Before installing the motherboard and adding devices on it, carefully read all the manuals that came with the package.
- Before using the product, ensure all cables are correctly connected and the power cables are not damaged. If you detect any damage, contact your dealer immediately.
- To avoid short circuits, keep paper clips, screws, and staples away from connectors, slots, sockets and circuitry.
- Avoid dust, humidity, and temperature extremes. Do not place the product in any area where it may become wet.
- Place the product on a stable surface.
- If you encounter technical problems with the product, contact a qualified service technician or your retailer.

About this guide

This user guide contains the information you need when installing and configuring the motherboard.

How this guide is organized

This guide contains the following parts:

1. **Chapter 1: Product Introduction**

   This chapter describes the features of the motherboard and the new technology it supports. It includes description of the switches, jumpers, and connectors on the motherboard.

2. **Chapter 2: Basic Installation**

   This chapter lists the hardware setup procedures that you have to perform when installing system components.

3. **Chapter 3: BIOS Setup**

   This chapter tells how to change system settings through the BIOS Setup menus. Detailed descriptions of the BIOS parameters are also provided.

4. **Chapter 4: RAID Support**

   This chapter describes the RAID configurations.

5. **Chapter 5: Multi GPU Support**

   This chapter describes how to install and configure multiple AMD® CrossFire™ graphics cards.

Where to find more information

Refer to the following sources for additional information and for product and software updates.

1. **ASUS website**

   The ASUS website (www.asus.com) provides updated information on ASUS hardware and software products.

2. **Optional documentation**

   Your product package may include optional documentation, such as warranty flyers, that may have been added by your dealer. These documents are not part of the standard package.

Conventions used in this guide

To ensure that you perform certain tasks properly, take note of the following symbols used throughout this manual.

DANGER/WARNING: Information to prevent injury to yourself when trying to complete a task.

CAUTION: Information to prevent damage to the components when trying to complete a task.

IMPORTANT: Instructions that you MUST follow to complete a task.

NOTE: Tips and additional information to help you complete a task.

Typography

Bold text	Indicates a menu or an item to select.
Italics	Used to emphasize a word or a phrase.
<Key>	Keys enclosed in the less-than and greater-than sign means that you must press the enclosed key. Example: <Enter> means that you must press the Enter or Return key.
<Key1> + <Key2> + <Key3>	If you must press two or more keys simultaneously, the key names are linked with a plus sign (+).

WS C246 PRO specifications summary

CPU	LGA1151 socket for Intel® Xeon® Processor E Family (Coffee Lake) / Intel® 9th/8th Generation Core™ i9/i7/i5/i3 processors / Intel® Pentium™ processors / Intel® Celeron™ processors* Supports Intel® Turbo Boost Technology *** Refer to www.asus.com for Intel® CPU support list**
Chipset	Intel® C246 Chipset
Memory	4 x DIMM, Max 64GB, DDR4 2666 / 2400 / 2133 MHz, ECC/ non-ECC UDIMM* Dual channel architecture *** Refer to www.asus.com for the Memory QVL(Qualified Vendors List)**
Expansion slots	PCIEX1_1: PCI-E x1 slot, x1 Gen3 Link, from PCH PCIEX16_1: PCI-E x16 slot, x16 / x8 Gen3 Link, from CPU PCIEX16_2: PCI-E x16 slot, x8 Gen3 Link, switched from PCIEX16_1, from CPU PCIEX1_2: PCI-E x1 slot, x1 Gen3 Link, from PCH PCIEX16_3: PCI-E x16 slot, x4 Gen3 Link, from PCH PCIEX16_4: PCI-E x16 slot, x4 Gen3 Link, from PCH, shared with 4 SATA
VGA Output	1 x Integrated Graphics Processor **Multi-VGA output support:** DVI-D / HDMI / DisplayPort / VGA - Supports DVI-D with Max resolution 1920 x 1200@60 Hz - Supports HDMI with Max resolution 4096 x 2160@24 Hz - Supports DisplayPort with Max resolution 4096 x 2304@60 Hz - Supports VGA with Max resolution 1920 x 1200@60 Hz
Multi-GPU support	Support AMD 3-Way CrossFireX™ Technology
Storage	**Intel® C246 Chipset:** 8 x SATA 6Gb/s with 1 x M.2 (PCI-E Gen3 x2 link, NGFF 2280 / 2260 / 2242 / 2230) or 7 x SATA 6Gb/s with 1 x M.2 (SATA 6Gb/s) - 4 x SATA shared with PCIEX16_4 1 x M.2 (SATA 6Gb/s & PCIe Gen3 x4 link, NGFF 22110 / 2280 / 2260 / 2242) Intel® RST (Windows & Linux) (Support software RAID 0, 1, 10 & 5) (Support Intel® Optane memory)
LAN	1 x Intel® I210-AT GbE LAN 1 x Intel® I219-LM GbE LAN (Supports teaming function)
USB	**Intel® C246 Chipset** - 5 x USB 2.0 ports (5 from mid-board) - 6 x USB 3.1 Gen 1 ports (2 from mid-board, 4 ports Type-A at back panel) - 2 x USB 3.1 Gen 2ports (1 Type-A port and 1 Type-C™ port at back panel)

(continued on the next page)

WS C246 PRO specifications summary

Audio	**Realtek® ALC887 8-channel high definition audio CODEC** - Optical S/PDIF out port at back I/O
Rear Panel I/O Ports	- 2 x USB 3.1 Gen 2 ports (1 port at Type-A, 1 port at Type-C™) - 4 x USB 3.1 Gen 1 ports - 1 x USB 2.0 port - 1 x HDMI - 1 x DisplayPort - 1 x DVI-D - 1 x VGA - 2 x RJ-45 ports - 8-channel Audio I/O ports (5+1 Audio jacks)
Internal I/O Connectors	- 2 x USB 2.0 connectors support additional 4 USB ports (9-pin) - 1 x USB 3.1 Gen 1 connectors support additional 2 USB ports (19-pin) - 8 x SATA 6.0Gb/s ports - 2 x M.2 Socket - 4 x Chassis Fan connectors (4-pin) for both 3-pin(DC mode) and 4-pin(PWM mode) coolers control - 1 x CPU OPT Fan connector (4-pin) - 1 x CPU fan with PWM control (4-pin) - 1 x Front panel audio connector (AAFP) - 1 x S/PDIF out header - 1 x 6-pin EATX12V_1 Power connector - 1 x TPM connector - 1 x 24-pin EATX Power connector - 1 x 8-pin EATX 12V Power connector - 1 x System Panel(Q-Connector) - 1 x COM port header - 1 x USB BIOS Flashback button - 1 x Power-on button - 1 x Reset button
BIOS Feature	16 MB Flash ROM, EFI AMI BIOS, PnP, DMI3.0, WfM2.0, SM BIOS 3.0, ACPI 5.0a, ASUS EZ Flash Utility, ASUS CrashFree BIOS 3
Manageability	WfM 2.0, DMI 3.0, WOL by PME, WOR by PME, PXE
OS	Windows 10/64 bit RedHat® Enterprise Linux SUSE Linux Enterprise Server
Form Factor	ATX Form Factor, 12” x 9.6” (305mm x 244mm)

- Specifications are subject to change without notice.
- Visit the ASUS website for the software manual.

Package contents

Check your motherboard package for the following items.

Motherboard	1 x WS C246 PRO motherboard
Cables	8 x Serial ATA 6Gb/s cables
Accessories	2 x M.2 screws kits 1 x COM port brackets 1 X I/O shield 1 x Q-connector
Application DVD	1 x Motherboard support DVD
Documentation	1 x User guide

If any of the above items is damaged or missing, contact your retailer.

Installation tools and components

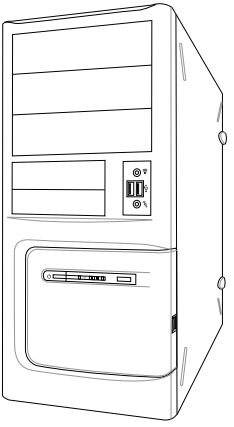

PC chassis

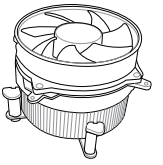

Intel® LGA1151 compatible CPU Fan

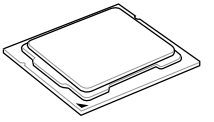

Intel® LGA1151 CPU

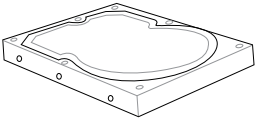

SATA hard disk drive

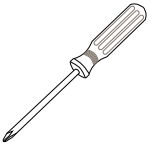

Phillips (cross) screwdriver

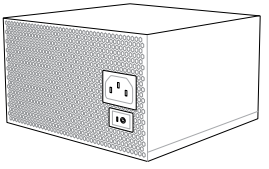

Power supply unit

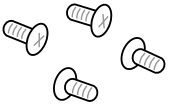

1 bag of screws

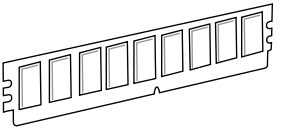

DIMM

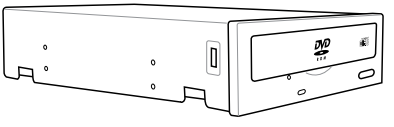

SATA optical disc drive (optional)

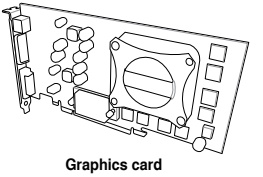

Graphics card

The tools and components in the table above are not included in the motherboard package.

Product Introduction

1

1.1 Motherboard overview

1.1.1 Before you proceed

Take note of the following precautions before you install motherboard components or change any motherboard settings.

- Unplug the power cord from the wall socket before touching any component.
- Before handling components, use a grounded wrist strap or touch a safely grounded object or a metal object, such as the power supply case, to avoid damaging them due to static electricity.
- Hold components by the edges to avoid touching the ICs on them.
- Whenever you uninstall any component, place it on a grounded antistatic pad or in the bag that came with the component.
- Before you install or remove any component, ensure that the ATX power supply is switched off or the power cord is detached from the power supply. Failure to do so may cause severe damage to the motherboard, peripherals, or components.

1.1.2 Motherboard layout

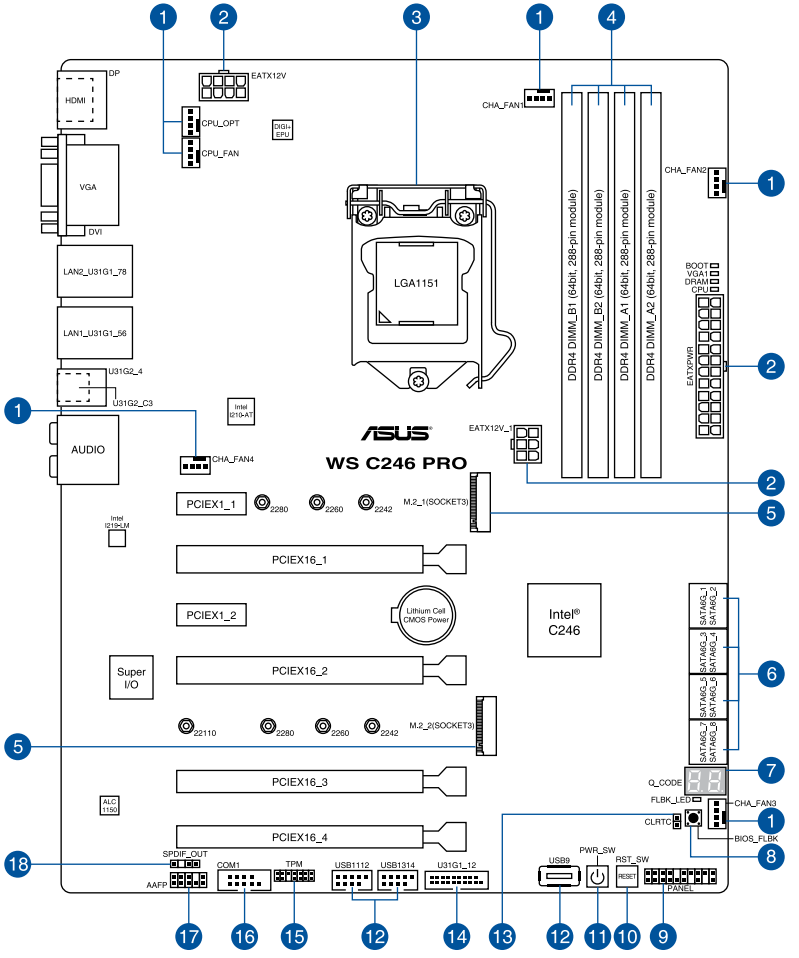

Refer to **1.1.9 Internal connectors** and **2.3.1 Rear I/O connection** for more information about rear panel connectors and internal connectors.

Layout contents

Connectors/Jumpers/Buttons and switches/Slots	Page
1. Fan and pump connectors (4-pin CPU_FAN; 4-pin CPU_OPT; 4-pin CHA_FAN1-4)	1-17
2. ATX power connectors (24-pin EATXPWR; 8-pin EATX12V; 6-pin EATX12V_1)	1-19
3. LGA1151 CPU socket	1-4
4. DDR4 DIMM slots	1-5
5. M.2 sockets (M.2_1; M.2_2)	1-20
6. Intel® Serial ATA 6 Gb/s connectors (7-pin SATA6G_1-8)	1-13
7. Q-Code LED	1-12
8. BIOS Flashback button	2-12
9. System panel connector (20-3 pin PANEL)	1-18
10. Reset button	1-9
11. Power-on button	1-9
12. USB 2.0 connectors (10-1 pin USB1112, USB1314; 4-pin Type-A USB9)	1-16
13. Clear RTC RAM (2-pin CLRTC)	1-10
14. USB 3.1 Gen 1 connector (20-1 pin U31G1_12)	1-15
15. TPM connector (14-1 pin TPM)	1-14
16. Serial port connector (10-1 pin COM1)	1-16
17. Front panel audio connector (10-1 pin AAFP)	1-14
18. Digital audio connector (4-1 pin SPDIF_OUT)	1-17

1.1.3 Central Processing Unit (CPU)

The motherboard comes with a surface mount LGA1151 socket designed for the Intel® Xeon® Processor E Family (Coffee Lake) / Intel® 9th/8th Generation Core™ i9/i7/i5/i3 processors / Intel® Pentium™ processors / Intel® Celeron™ processors.

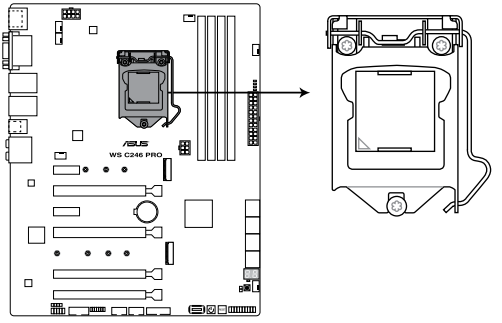

WS C246 PRO CPU LGA1151

Ensure that you install the correct CPU designed for LGA1151 socket only. DO NOT install a CPU designed for other sockets on the LGA1151 socket.

- Ensure that all power cables are unplugged before installing the CPU.
- Upon purchase of the motherboard, ensure that the PnP cap is on the socket and the socket contacts are not bent. Contact your retailer immediately if the PnP cap is missing, or if you see any damage to the PnP cap/socket contacts/motherboard components. ASUS will shoulder the cost of repair only if the damage is shipment/transit-related.
- Keep the cap after installing the motherboard. ASUS will process Return Merchandise Authorization (RMA) requests only if the motherboard comes with the cap on the LGA1151 socket.
- The product warranty does not cover damage to the socket contacts resulting from incorrect CPU installation/removal, or misplacement/loss/incorrect removal of the PnP cap.

1.1.4 System memory

The motherboard comes with four DDR 4 (Double Data Rate 4) Dual Inline Memory Modules (DIMM) slots.

A DDR4 module is notched differently from a DDR, DDR2 or DDR3 module. DO NOT install a DDR, DDR2 or DDR3 memory module to the DDR4 slot.

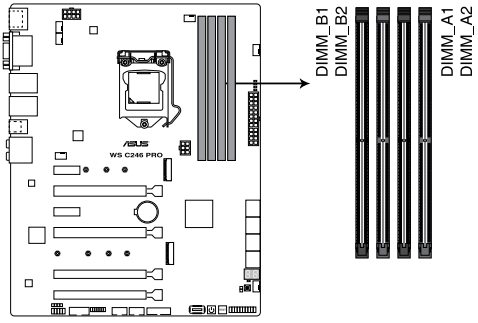

WS C246 PRO 288-pin DDR4 DIMM socket

Recommended memory configurations

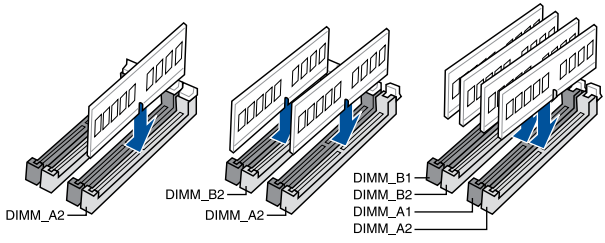

Memory configurations

You may install 2 GB, 4 GB, 8 GB and 16 GB unbuffered and ECC and non-ECC DDR4 DIMMs into the DIMM sockets.

You may install varying memory sizes in Channel A and Channel B. The system maps the total size of the lower-sized channel for the dual-channel configuration. Any excess memory from the higher-sized channel is then mapped for single-channel operation.

- The default memory operation frequency is dependent on its Serial Presence Detect (SPD), which is the standard way of accessing information from a memory module. Under the default state, some memory modules for overclocking may operate at a lower frequency than the vendor-marked value.
- For system stability, use a more efficient memory cooling system to support a full memory load (4 DIMMs) or overclocking condition.
- Always install the DIMMs with the same CAS Latency. For an optimum compatibility, we recommend that you install memory modules of the same version or data code (D/C) from the same vendor. Check with the vendor to get the correct memory modules.
- Visit the ASUS website for the latest QVL.

1.1.5 Expansion slots

Unplug the power cord before adding or removing expansion cards. Failure to do so may cause you physical injury and damage motherboard components.

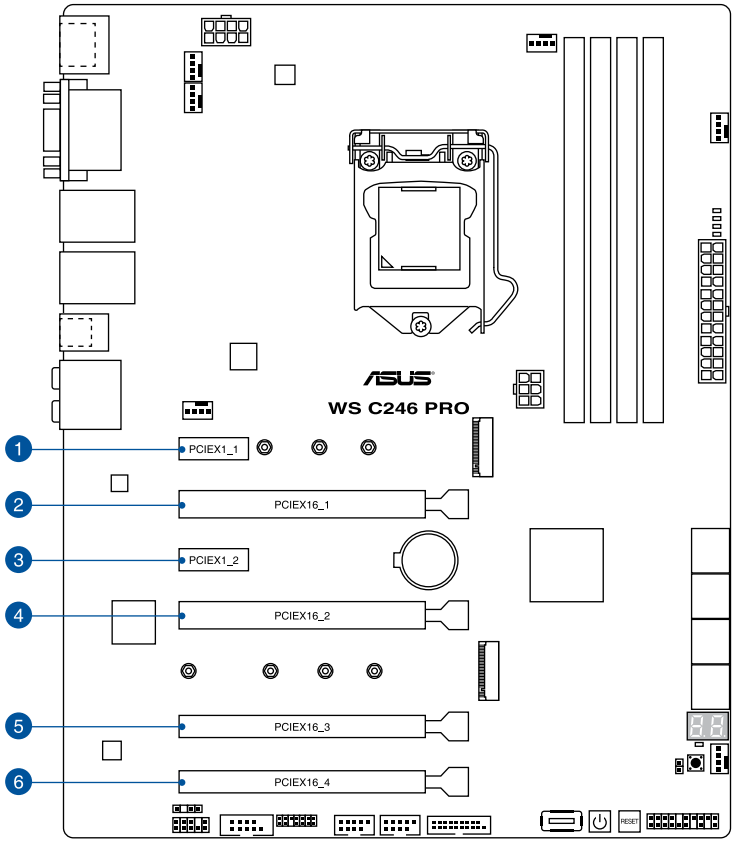

Slot No.	Slot Description
1	PCIE x1_1 slot
2	PCIE x16_1 slot
3	PCIE x1_2 slot
4	PCIE x16_2 slot
5	PCIE x16_3 slot
6	PCIE x16_4 slot

VGA configuration	PCI Express operating mode		
	PCIe 3.0 x16_1 (gray)	PCIe 3.0 x16_2	PCIe 3.0 x16_3
Single VGA/PCIe card	x16 (Recommended for single VGA card)	N/A	x4
Dual VGA/PCIe cards	x8	x8	x4
Triple VGA/PCIe cards	x8	x8	x4

- In single VGA card mode, use the PCIe 3.0 x16_1 slot (gray) for a PCI Express x16 graphics card to get better performance.
- We recommend that you provide sufficient power when running CrossFireX™ mode.
- We recommend you connect the EATX12V_1 cable when running CrossFireX™.
- Connect a chassis fan to the motherboard connector labeled CHA_FAN1/2 when using multiple graphics cards for better thermal environment.

1.1.6 Onboard buttons and switches

Onboard buttons and switches allow you to fine-tune performance when working on a bare or open-case system. This is ideal for overclockers and gamers who continually change settings to enhance system performance.

1. Power-on button

The motherboard comes with a power-on button that allows you to power up or wake up the system. The button also lights up when the system is plugged to a power source indicating that you should shut down the system and unplug the power cable before removing or installing any motherboard component.

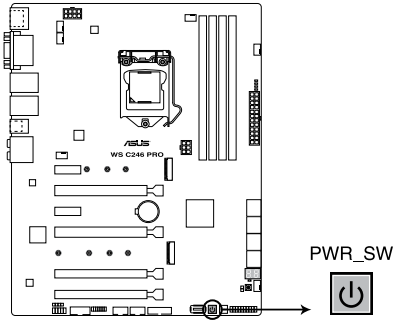

WS C246 PRO Power on button

2. Reset button

Press the reset button to reboot the system.

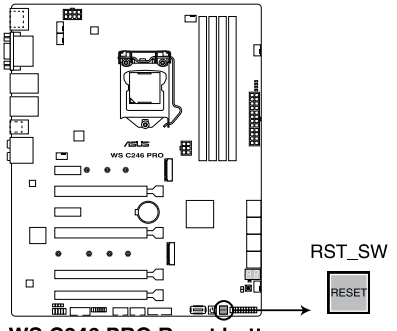

WS C246 PRO Reset button

1.1.7 Jumpers

1. Clear RTC RAM (2-pin CLRTC)

This header allows you to clear the Real Time Clock (RTC) RAM in CMOS. You can clear the CMOS memory of date, and system setup parameters by erasing the CMOS RTC RAM data. The onboard button cell battery powers the RAM data in CMOS, which include system setup information such as system passwords.

To erase the RTC RAM:

1. Turn OFF the computer and unplug the power cord.
2. Use a metal object such as a screwdriver to short the two pins for 5 - 10 seconds.
3. Plug the power cord and turn ON the computer.
4. Hold down the <Del> key during the boot process and enter BIOS setup to re-enter data.

Except when clearing the RTC RAM, never short-circuit the CLRTC jumper. Shorting the CLRTC jumper will cause system boot failure!

If the steps above do not help, remove the onboard battery and repeat steps 1 - 2 to clear the CMOS RTC RAM data. After the CMOS clearance, reinstall the battery.

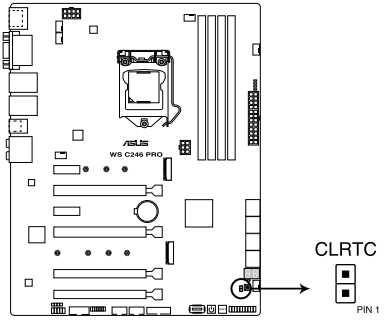

WS C246 PRO Clear RTC RAM jumper

1.1.8 Onboard LEDs

1. Q LED (CPU, DRAM, VGA, BOOT)

Q LED checks key components (CPU, DRAM, VGA card, and booting devices) in sequence during motherboard booting process. If an error is found, the corresponding LED remains lit until the problem is solved. This user-friendly design provides an intuitive way to locate the root problem within seconds.

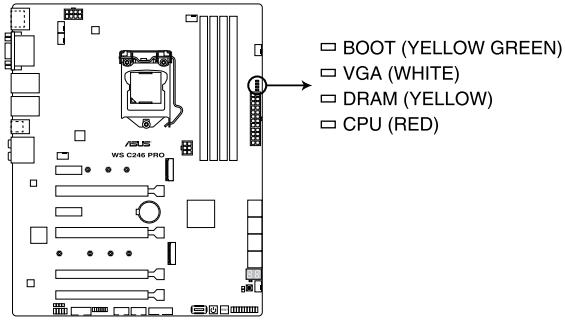

WS C246 PRO CPU/ DRAM/ BOOT_DEVICE/ VGA LED

The Q LEDs provide the most probable cause of an error code as a starting point for troubleshooting. The actual cause may vary from case to case.

2. USB BIOS Flashback LED (FLBK_LED)

The BIOS Flashback LED flashes when you press the BIOS Flashback button for BIOS update.

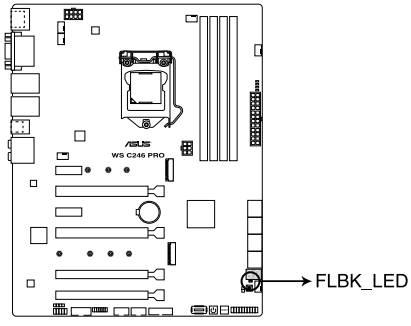

WS C246 PRO FLBK_LED

3. Q-Code LED

The Q-Code LED design provides you with a 2-digit POST code that displays the system status.

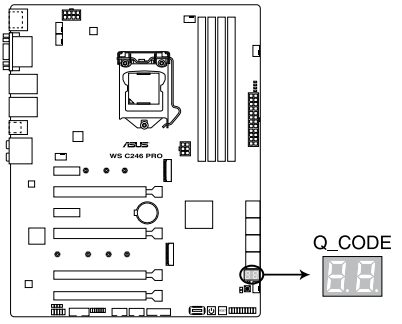

WS C246 PRO Q-Code LED

- The Q-Code LED provides the most probable cause of an error code as a starting point for troubleshooting. The actual cause may vary from case to case.
- Please refer to the Q-Code table in the **Appendix** section for more details.

1.1.9 Internal connectors

1. Intel® Serial ATA 6 Gb/s connectors (7-pin SATA6G_1-8)

These connectors connect to Serial ATA 6 Gb/s hard disk drives via Serial ATA 6 Gb/s signal cables.

If you installed Serial ATA hard disk drives, you can create a RAID 0, 1, 5, and 10 configuration with the Intel® Rapid Storage Technology enterprise through the onboard Intel® C246 chipset.

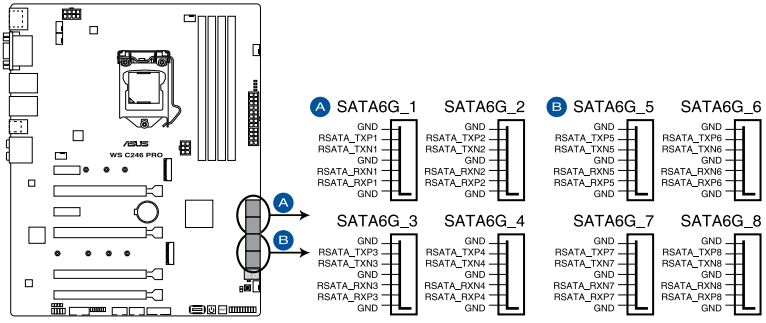

WS C246 PRO Intel® SATA 6 Gb/s connectors

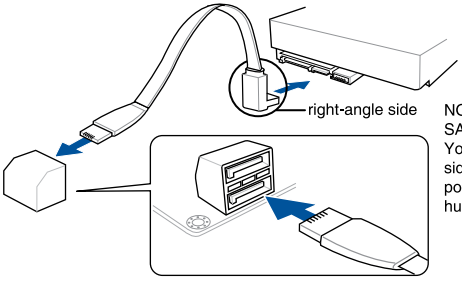

NOTE: Connect the right-angle side of SATA signal cable to SATA device. You may also connect the right-angle side of SATA cable to the onboard SATA port to avoid mechanical conflict with huge graphics cards.

- These connectors are set to **[AHCI Mode]** by default. If you intend to create a Serial ATA RAID set using these connectors, set the SATA Mode item in the BIOS to **[Intel RST Premium with Intel Optane System Acceleration(RAID)]**.
- SATA6G_2 port shares bandwidth with M.2_1 socket. When M.2_2 slot runs in SATA mode, the SATA6G_2 port will be disabled.

2. Front panel audio connector (10-1 pin AAFP)

This connector is for a chassis-mounted front panel audio I/O module that supports HD Audio. Connect one end of the front panel audio I/O module cable to this connector.

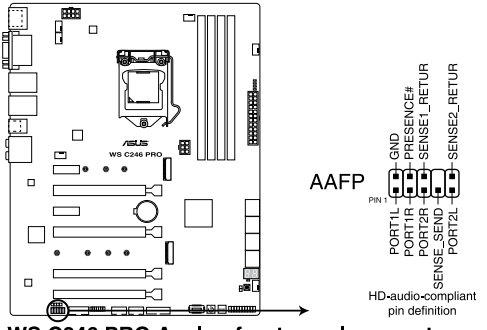

WS C246 PRO Analog front panel connector

We recommend that you connect a high-definition front panel audio module to this connector to avail of the motherboard's high-definition audio capability.

3. TPM connector (14-1 pin TPM)

This connector supports a Trusted Platform Module (TPM) system, which securely store keys, digital certificates, passwords and data. A TPM system also helps enhance network security, protect digital identities, and ensures platform integrity.

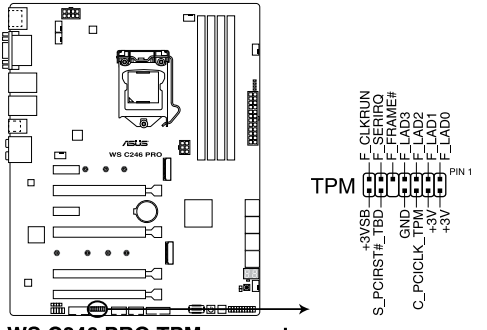

WS C246 PRO TPM connector

The TPM module is purchased separately.

4. USB 3.1 Gen 1 connector (20-1 pin U31G1_12)

These connector allows you to connect a USB 3.1 Gen 1 module for additional USB 3.1 Gen 1 front or rear panel ports. With an installed USB 3.1 Gen 1 module, you can enjoy all the benefits of USB 3.1 Gen 1 including faster data transfer speeds of up to 5 Gb/s, faster charging time for USB-chargeable devices, optimized power efficiency, and backward compatibility with USB 2.0.

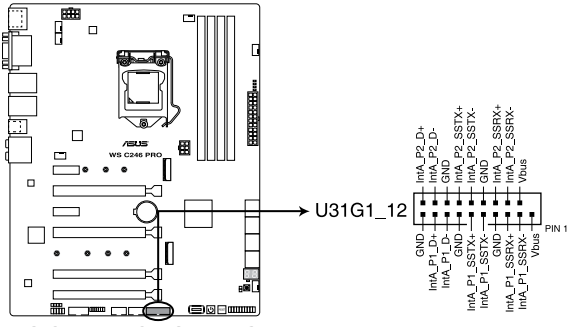

WS C246 PRO USB 3.1 Gen 1 connector

The USB 3.1 Gen 1 module is purchased separately.

5. USB 2.0 connectors (10-1 pin USB1112, USB1314; 4-pin Type-A USB9)

The 10-1 pin connector allows you to connect a USB 2.0 module for additional USB 2.0 front or rear panel ports. The 4-pin USB (Universal Serial Bus) Type-A port is available for connecting USB 2.0 devices. These USB connectors comply with USB 2.0 specification that supports up to 480 Mbps connection speed.

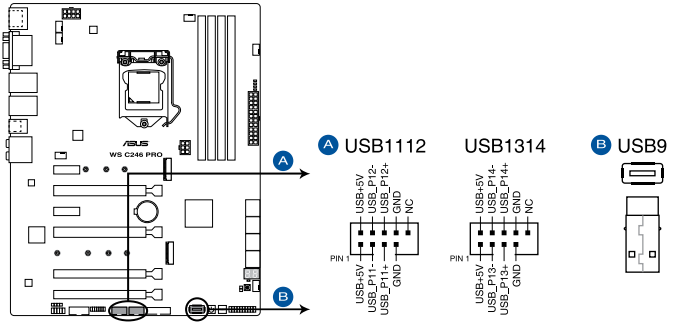

WS C246 PRO USB 2.0 connectors

DO NOT connect a 1394 cable to the USB connectors. Doing so will damage the motherboard!

6. Serial port connector (10-1 pin COM1)

This connector is for a serial (COM) port. Connect the serial port module cable to this connector, then install the module to a slot opening at the back of the system chassis.

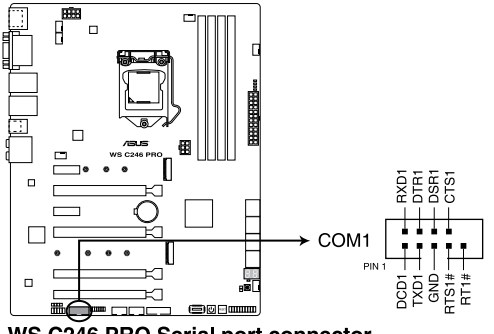

WS C246 PRO Serial port connector

7. Fan and pump connectors (4-pin CPU_FAN; 4-pin CPU_OPT; 4-pin CHA_FAN1-4)

Connect the fan cables to the fan connectors on the motherboard, ensuring that the black wire of each cable matches the ground pin of the connector.

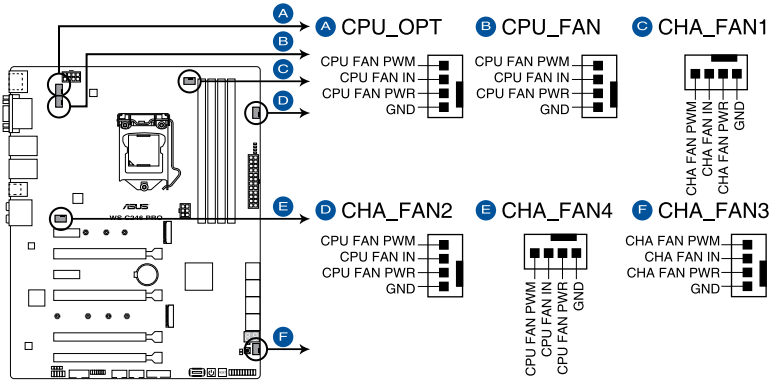

WS C246 PRO Fan connectors

- DO NOT forget to connect the fan cables to the fan connectors. Insufficient air flow inside the system may damage the motherboard components. These are not jumpers! Do not place jumper caps on the fan connectors!
- Ensure that the CPU fan cable is securely installed to the CPU fan connector.

8. Digital audio connector (4-1 pin SPDIF_OUT)

This connector is for an additional Sony/Philips Digital Interface (S/PDIF) port. Connect the S/PDIF Out module cable to this connector, then install the module to a slot opening at the back of the system chassis.

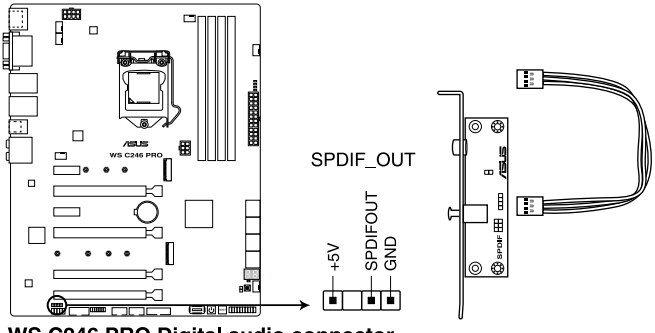

WS C246 PRO Digital audio connector

The S/PDIF module is purchased separately.

9. System panel connector (20-3 pin PANEL)

This connector supports several chassis-mounted functions.

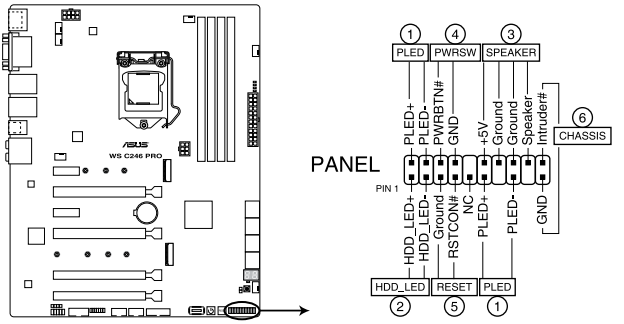

WS C246 PRO System panel connector

- **System power LED (2-pin or 3-1 pin PLED)**

  The 2-pin or 3-1 pin connector is for the system power LED. Connect the chassis power LED cable to this connector. The system power LED lights up when you turn on the system power, and blinks when the system is in sleep mode.

- **Hard disk drive activity LED (2-pin HDD_LED)**

  This 2-pin connector is for the HDD Activity LED. Connect the HDD Activity LED cable to this connector. The HDD LED lights up or flashes when data is read from or written to the HDD.

- **System warning speaker (4-pin SPEAKER)**

  This 4-pin connector is for the chassis-mounted system warning speaker. The speaker allows you to hear system beeps and warnings.

- **ATX power button/soft-off button (2-pin PWRSW)**

  This connector is for the system power button. Pressing the power button turns the system on or puts the system in sleep or soft-off mode depending on the operating system settings. Pressing the power switch for more than four seconds while the system is ON turns the system OFF.

- **Reset button (2-pin RESET)**

  This 2-pin connector is for the chassis-mounted reset button for system reboot without turning off the system power.

- **Chassis intrusion connector (2-pin CHASSIS)**

  This connector is for a chassis-mounted intrusion detection sensor or switch. Connect one end of the chassis intrusion sensor or switch cable to this connector. The chassis intrusion sensor or switch sends a high-level signal to this connector when a chassis component is removed or replaced. The signal is then generated as a chassis intrusion event.

10. ATX power connectors (24-pin EATXPWR; 8-pin EATX12V; 6-pin EATX12V_1)

These connectors are for ATX power supply plugs. The power supply plugs are designed to fit these connectors in only one orientation. Find the proper orientation and push down firmly until the connectors completely fit.

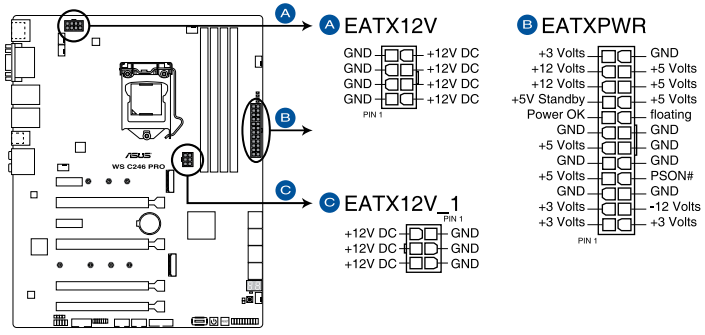

WS C246 PRO ATX power connectors

Ensure to connect the 8-pin power plug, or connect both the 8-pin and 6-pin power plugs.

- For a fully configured system, we recommend that you use a power supply unit (PSU) that complies with ATX 12 V Specification 2.0 (or later version) and provides a minimum power of 350 W.
- DO NOT forget to connect the 8-pin EATX12V power plug. Otherwise, the system will not boot.
- We recommend that you use a PSU with a higher power output when configuring a system with more power-consuming devices. The system may become unstable or may not boot up if the power is inadequate.
- If you want to use two or more high-end PCI Express x16 cards, use a PSU with 1000W power or above to ensure the system stability, and recommend connecting the 6-pin EATX12V_1 power plug.

11. M.2 sockets (M.2_1; M.2_2)

These sockets allow you to install M.2 SSD modules.

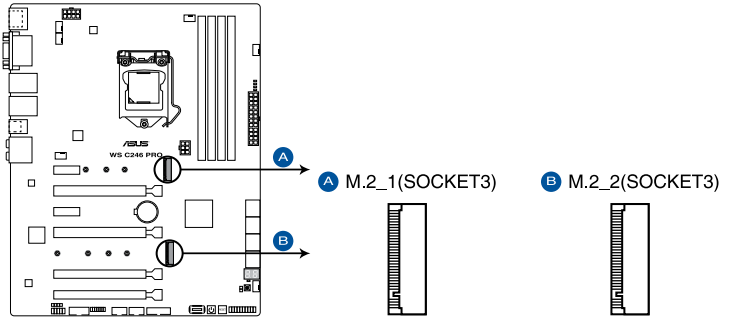

WS C246 PRO M.2(SOCKET3)

- M.2_1 socket supports PCIe 3.0 x2 and SATA mode M Key design and type 2242 / 2260 / 2280 PCIe and SATA storage devices.
- M.2_2 socket supports PCIe 3.0 x4 M Key design and type 2242 / 2260 / 2280 / 22110 PCIe storage devices.
- M.2_1 socket shares bandwidth with SATA6G_2 port. When M.2_1 slot runs in SATA mode, the SATA6G_2 port will be disabled.
- These sockets support IRST (Intel® Rapid Storage Technology).
- These sockets support Intel® Optane memory.

The M.2 SSD module is purchased separately.

Basic Installation

2

2.1 Building your PC system

The diagrams in this section are for reference only. The motherboard layout may vary with models, but the installation steps are the same for all models.

2.1.1 CPU installation

- Ensure that you install the correct CPU designed for LGA1151 socket only. DO NOT install a CPU designed for LGA1155 and LGA1156 sockets on the LGA1151 socket.
- Upon purchase of the motherboard, ensure that the PnP cap is on the socket and the socket contacts are not bent. Contact your retailer immediately if the PnP cap is missing, or if you see any damage to the PnP cap/socket contacts/motherboard components. ASUS will shoulder the cost of repair only if the damage is shipment/transit-related.
- The product warranty does not cover damage to the socket contacts resulting from incorrect CPU installation/removal, or misplacement/loss/incorrect removal of the PnP cap.

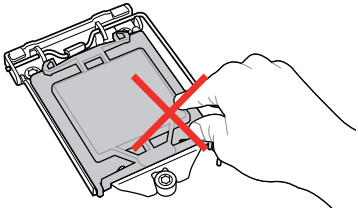

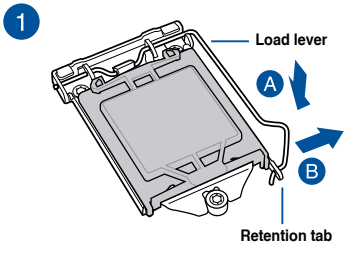

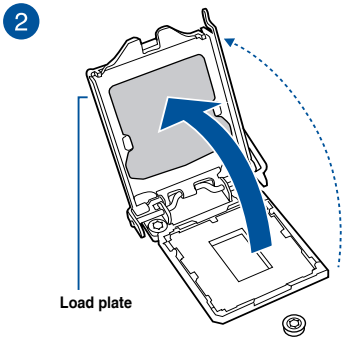

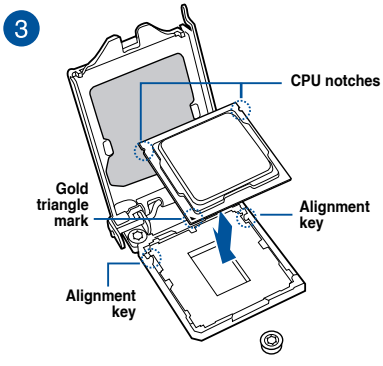

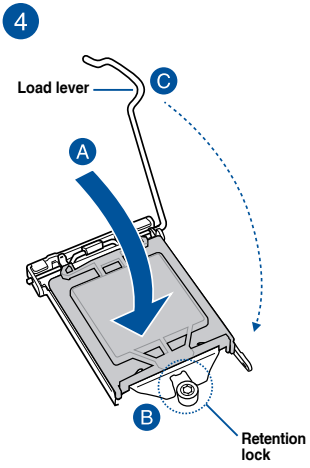
4
Load lever
C
A
B
Retention lock

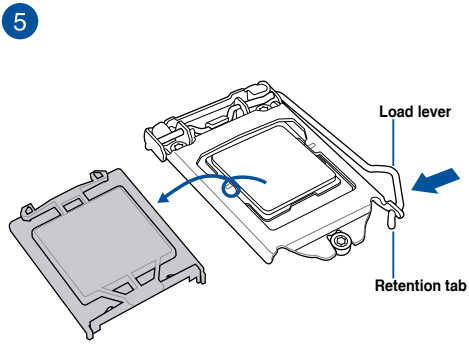
5
Load lever
Retention tab

2.1.2 Cooling system installation

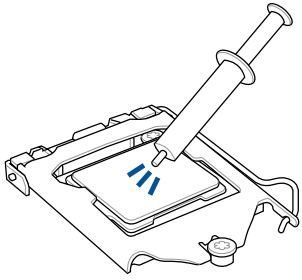

Apply the Thermal Interface Material to the CPU cooling system and CPU before you install the cooling system, if necessary.

To install the CPU heatsink and fan assembly

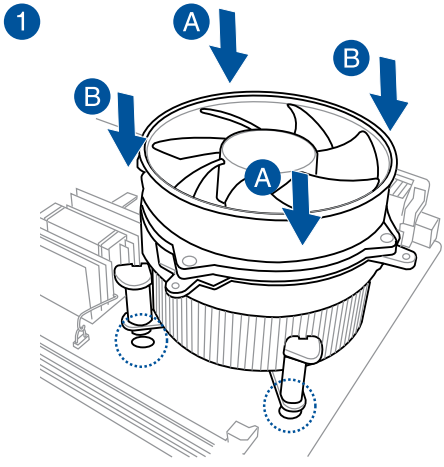

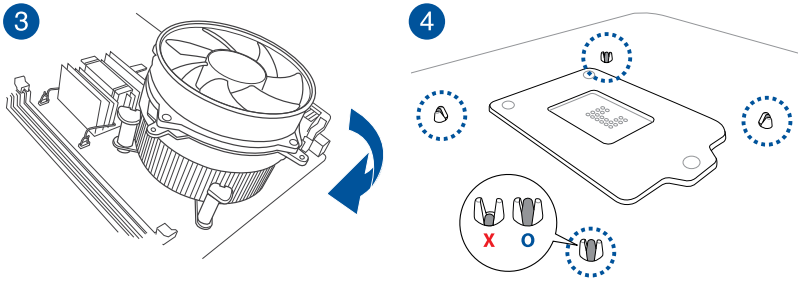

Chapter 2

2.1.3 Motherboard installation

1. Install the ASUS Q-Shield to the chassis rear I/O panel.

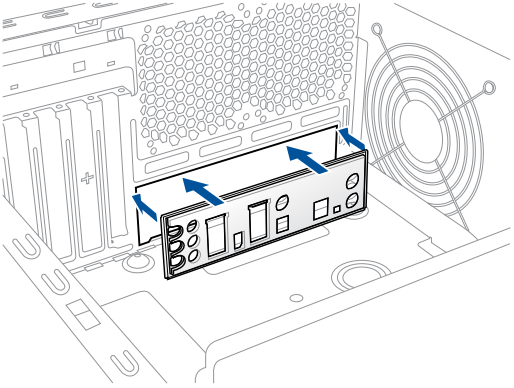

2. Place the motherboard into the chassis, ensuring that its rear I/O ports are aligned to the chassis' rear I/O panel.

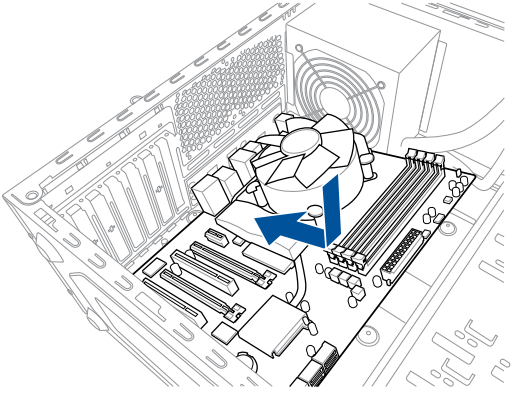

3. Place nine (9) screws into the holes indicated by circles to secure the motherboard to the chassis.

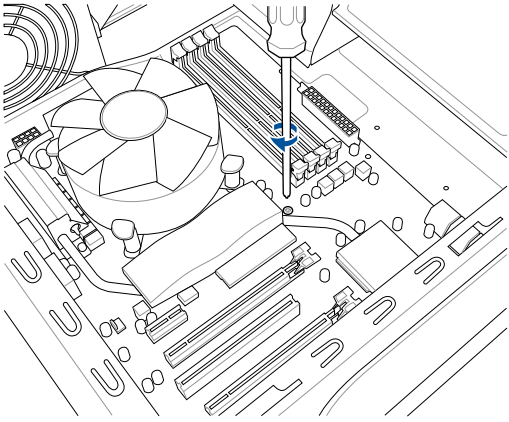

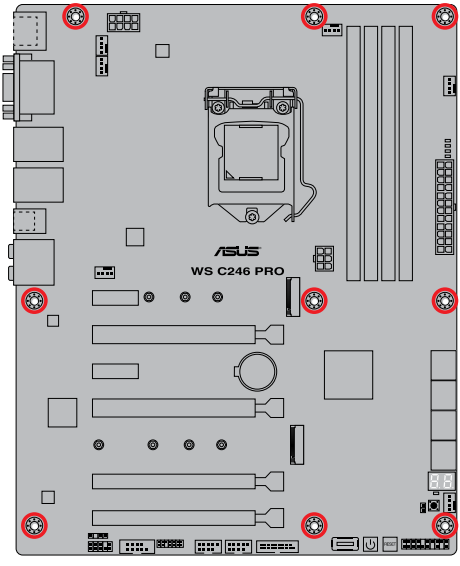

DO NOT overtighten the screws! Doing so can damage the motherboard.

2.1.4 DIMM installation

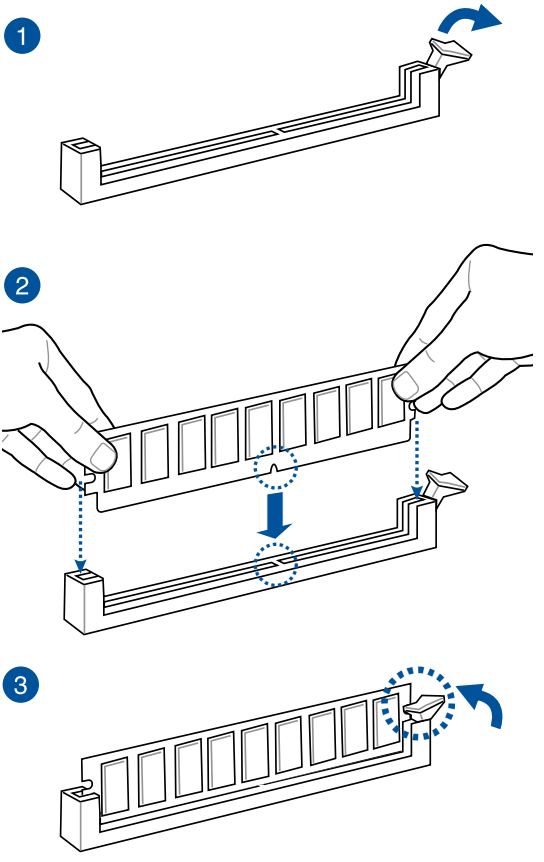

To remove a DIMM

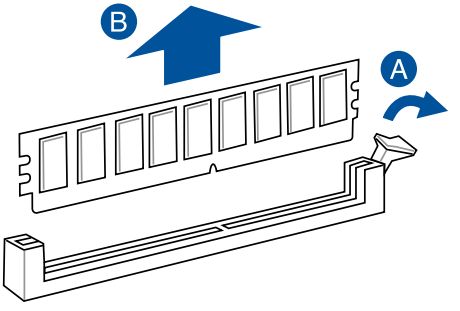

2.1.5 ATX power connection

1

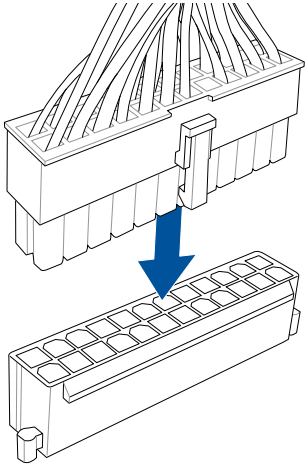

2

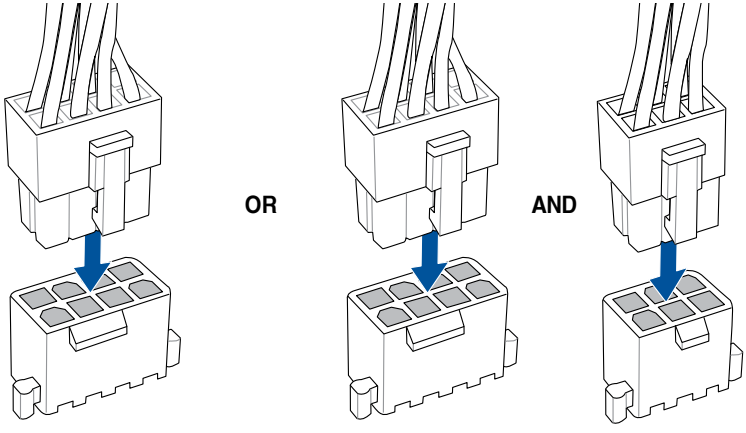

- DO NOT connect the 6-pin power plug only, the motherboard may overheat under heavy usage.
- Ensure to connect the 8-pin power plug, or connect both the 8-pin and 6-pin power plugs.

2.1.6 SATA device connection

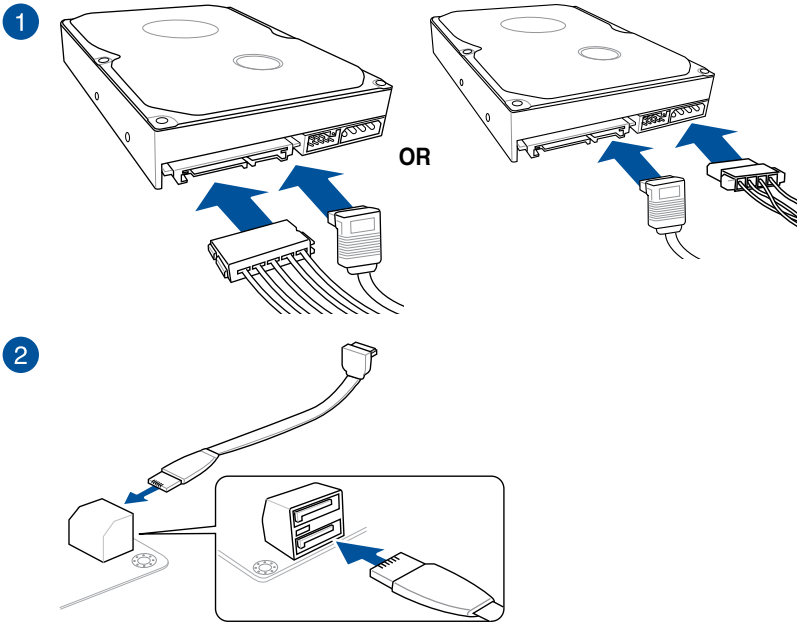

2.1.7 Front I/O connector

To install ASUS Q-Connector

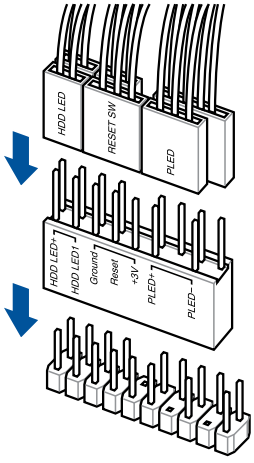

To install front panel audio connector

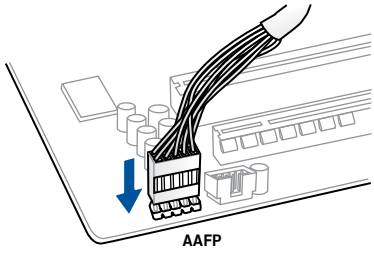

To install USB 3.1 Gen 1 connector

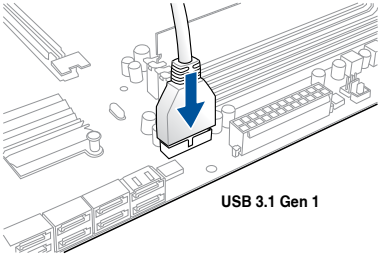

To install USB 2.0 connector

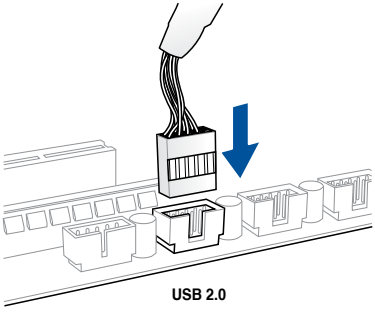

Chapter 2

2.1.8 Expansion card installation

To install PCIe x16 cards

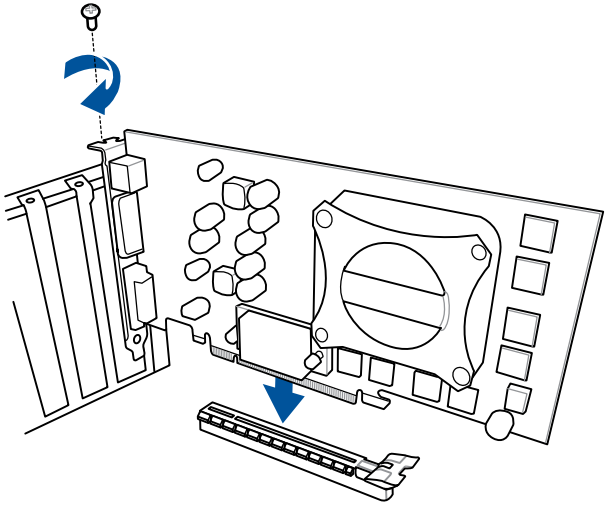

To install PCIe x1 cards

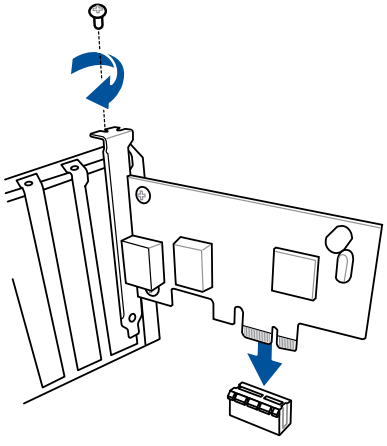

2.1.9 M.2 installation

1

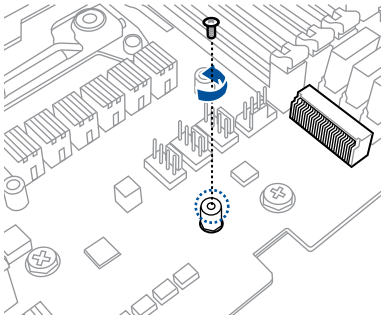

2

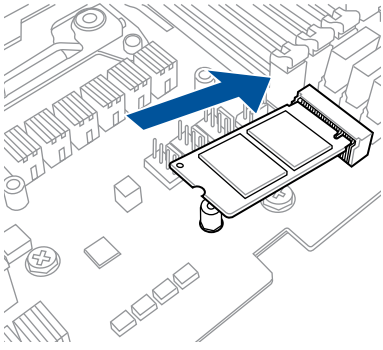

3

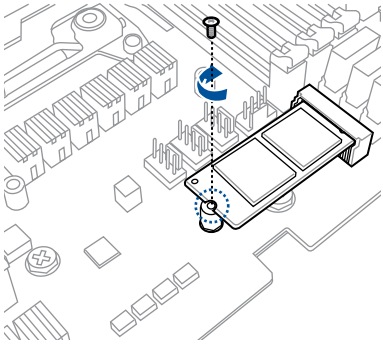

Supported M.2 type varies per motherboard.

2.2 BIOS update utility

USB BIOS Flashback

USB BIOS Flashback allows you to easily update the BIOS without entering a bootable environment, ideal for BIOS recovery, rollback, or updates to support new CPUs. Simply insert a USB storage device to the USB port (the USB port hole marked in green on the I/O shield) then press the USB BIOS Flashback button for three seconds to start the update process.

To use USB BIOS Flashback:

1. Download the latest BIOS from the support site at www.asus.com/support/ and save it to as USB storage device.

- We recommend you to use a USB 2.0 storage device to save the latest BIOS version for better compatibility and stability.
- When downloading or updating the BIOS file, rename it as **WS246P.CAP** for this motherboard.

2. Insert the USB storage device to the USB Flashback port.
3. Shut down your computer.

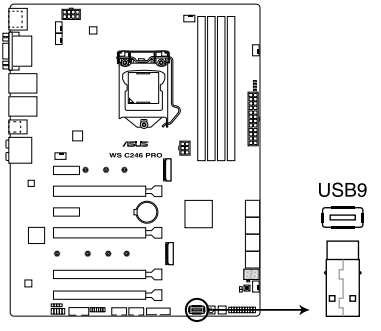

4. On your motherboard, press the BIOS Flashback button for three seconds until the Flashback LED blinks three times, indicating that the BIOS Flashback function is enabled.

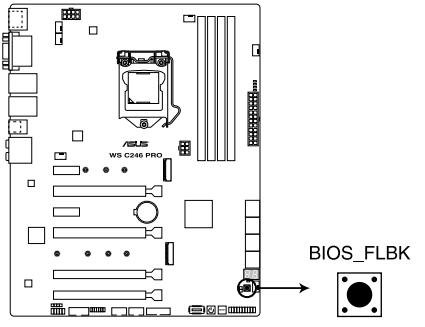

WS C246 PRO BIOS_FLBK button

Refer to section **1.1.8 Onboard LEDs** for more information of the Flashback LED.

5. Wait until the light goes out, indicating that the BIOS updating process is completed.

For more BIOS update utilities in BIOS setup, refer to the section **3.10 Updating BIOS** in Chapter 3.

- Do not unplug portable disk, power system, or short the CLRTC jumper while BIOS update is ongoing, otherwise update will be interrupted. In case of interruption, please press and hold the BIOS_FLBK button for 3 seconds again to restart the process.
- If the light flashes for five seconds and turns into a solid light, this means that the BIOS Flashback is not operating properly. Please check the following when this happens:
  - The USB drive should only contain a single partition.
  - The USB drive should be formatted to a FAT32, FAT16, or NTFS filesystem.
  - The BIOS filename should be correctly named, and in the root folder of the USB drive.
  - If the problem persists, the USB drive may not be compatible, please try another USB drive of a different brand/model.

  Then retry the flashback by pressing the BIOS flashback button for three seconds until the Flashback LED starts to blink.

2.3 Motherboard rear and audio connections

2.3.1 Rear I/O connection

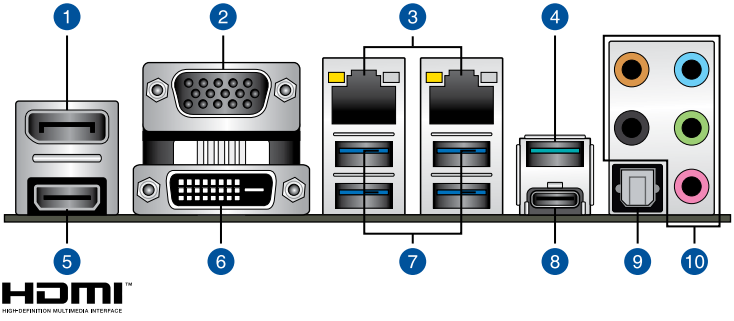

Rear panel connectors			
1.	DisplayPort	6.	DVI-D port
2.	VGA port	7.	USB 3.1 Gen 1 ports 5, 6, 7, and 8
3.	Intel® LAN port 1 and 2 (I210-AT & I219-LM)*	8.	USB 3.1 Gen 2 Type-C™ port C3
4.	USB 3.1 Gen 2 Type-A port 4	9.	Optical S/PDIF Out port
5.	HDMI 1.4b port	10.	Audio I/O ports**

*** and ** : Refer to the tables on the next page for LAN port LEDs and audio port definitions.**

We strongly recommend that you connect your devices to ports with matching data transfer rate. Please connect your USB 3.1 Gen 1 devices to USB 3.1 Gen 1 ports and your USB 3.1 Gen 2 devices to USB 3.1 Gen 2 ports for faster and better performance for your devices.

* LAN ports LED indications

Activity Link LED		Speed LED	
Status	Description	Status	Description
Off	No link	Off	10 Mbps connection
YELLOW	Linked	ORANGE	100 Mbps connection
BLINKING	Data activity	GREEN	1 Gbps connection

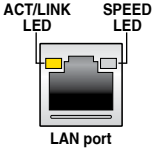

You can disable the LAN controllers in BIOS. Due to hardware design, the LAN1 port's LEDs may continue to blink even when disabled.

** Audio 2, 4, 5.1 or 7.1-channel configuration

Port	Headset 2-channel	4-channel	5.1-channel	7.1-channel
Light Blue	Line In	Line In	Line In	Side Speaker Out
Lime	Line Out	Front Speaker Out	Front Speaker Out	Front Speaker Out
Pink	Mic In	Mic In	Mic In	Mic In
Orange	–	–	Center/Sub woofer	Center/Sub woofer
Black	–	Rear Speaker Out	Rear Speaker Out	Rear Speaker Out

2.3.2 Audio I/O connections

Audio I/O ports

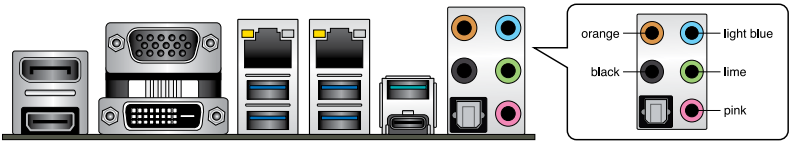

Connect to Headphone and Mic

Connect to Stereo Speakers

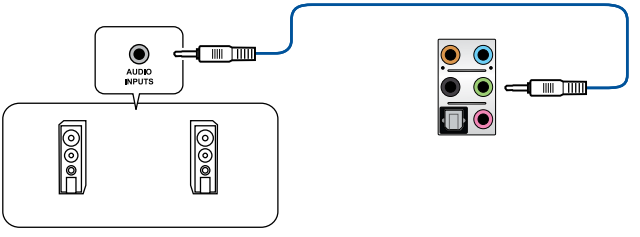

Connect to 2-channel Speakers

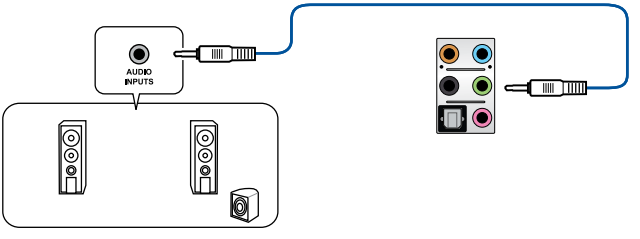

Connect to 4-channel Speakers

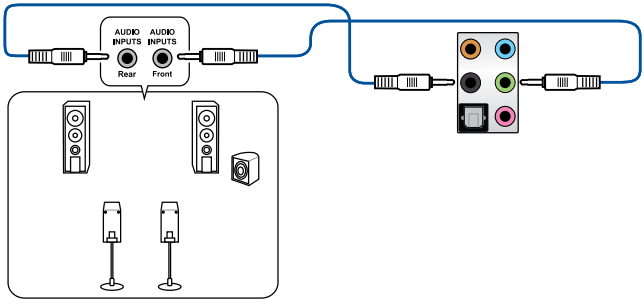

Connect to 5.1-channel Speakers

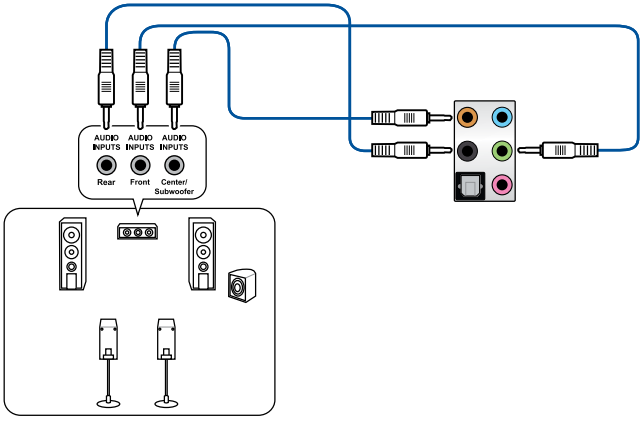

Connect to 7.1-channel Speakers

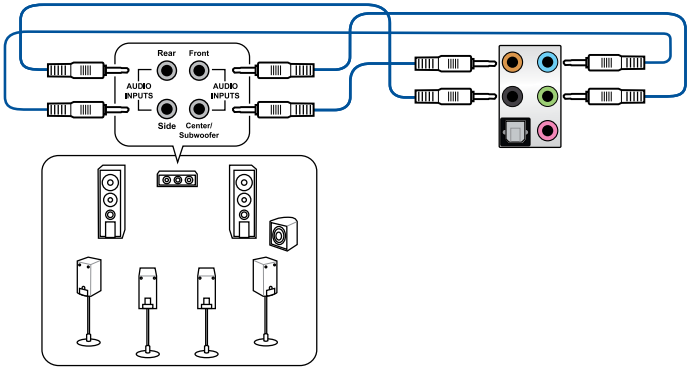

2.4 Starting up for the first time

1. After making all the connections, replace the system case cover.
2. Ensure that all switches are off.
3. Connect the power cord to the power connector at the back of the system chassis.
4. Connect the power cord to a power outlet that is equipped with a surge protector.
5. Turn on the devices in the following order:
   a. Monitor
   b. External storage devices (starting with the last device on the chain)
   c. System power
6. After applying power, the system power LED on the system front panel case lights up. For systems with ATX power supplies, the system LED lights up when you press the ATX power button. If your monitor complies with the “green” standards or if it has a “power standby” feature, the monitor LED may light up or change from orange to green after the system LED turns on.

   The system then runs the power-on self tests (POST). While the tests are running, the BIOS beeps (refer to the BIOS beep codes table) or additional messages appear on the screen. If you do not see anything within 30 seconds from the time you turned on the power, the system may have failed a power-on test. Check the jumper settings and connections or call your retailer for assistance.

BIOS Beep	Description
One short beep	VGA detected Quick boot set to disabled No keyboard detected
One continuous beep followed by two short beeps then a pause (repeated)	No memory detected
One continuous beep followed by three short beeps	No VGA detected
One continuous beep followed by four short beeps	Hardware component failure

7. At power on, hold down the <Delete> key to enter the BIOS Setup. Follow the instructions in Chapter 3.

2.5 Turning off the computer

While the system is ON, press the power button for less than four seconds to put the system on sleep mode or soft-off mode, depending on the BIOS setting. Press the power switch for more than four seconds to let the system enter the soft-off mode regardless of the BIOS setting.

BIOS Setup

3

3.1 Knowing BIOS

The new ASUS UEFI BIOS is a Unified Extensible Interface that complies with UEFI architecture, offering a user-friendly interface that goes beyond the traditional keyboard-only BIOS controls to enable a more flexible and convenient mouse input. You can easily navigate the new UEFI BIOS with the same smoothness as your operating system. The term "BIOS" in this user manual refers to "UEFI BIOS" unless otherwise specified.

BIOS (Basic Input and Output System) stores system hardware settings such as storage device configuration, overclocking settings, advanced power management, and boot device configuration that are needed for system startup in the motherboard CMOS. In normal circumstances, the default BIOS settings apply to most conditions to ensure optimal performance. **DO NOT change the default BIOS settings** except in the following circumstances:

- An error message appears on the screen during the system bootup and requests you to run the BIOS Setup.
- You have installed a new system component that requires further BIOS settings or update.

Inappropriate BIOS settings may result to instability or boot failure. **We strongly recommend that you change the BIOS settings only with the help of a trained service personnel**.

- When downloading or updating the BIOS file, rename it as **WS246P.CAP** for this motherboard.
- BIOS settings and options may vary due to different BIOS release versions. Please refer to the latest BIOS version for settings and options.

3.2 BIOS setup program

Use the BIOS Setup to update the BIOS or configure its parameters. The BIOS screen include navigation keys and brief onscreen help to guide you in using the BIOS Setup program.

Entering BIOS at startup

To enter BIOS Setup at startup, press <Delete> or <F2> during the Power-On Self Test (POST). If you do not press <Delete> or <F2>, POST continues with its routines.

Entering BIOS Setup after POST

To enter BIOS Setup after POST:

- Press <Ctrl>+<Alt>+<Delete> simultaneously.
- Press the reset button on the system chassis.
- Press the power button to turn the system off then back on. Do this option only if you failed to enter BIOS Setup using the first two options.

After doing either of the three options, press <Delete> key to enter BIOS.

- The BIOS setup screens shown in this section are for reference purposes only, and may not exactly match what you see on your screen.
- Ensure that a USB mouse is connected to your motherboard if you want to use the mouse to control the BIOS setup program.
- If the system becomes unstable after changing any BIOS setting, load the default settings to ensure system compatibility and stability. Select the **Load Optimized Defaults** item under the **Exit** menu or press hotkey **<F5>**. See section **3.8 Exit Menu** for details.
- If the system fails to boot after changing any BIOS setting, try to clear the CMOS and reset the motherboard to the default value. See section **1.1.6 Onboard buttons and switches** for information on how to erase the RTC RAM via the Clear CMOS button.
- The BIOS setup program does not support the Bluetooth devices.

Please visit ASUS website for the detailed BIOS content manual.

BIOS menu screen

The BIOS Setup program can be used under two modes: **EZ Mode** and **Advanced Mode**. You can change modes from **Setup Mode** in **Boot menu** or by pressing the <F7> hotkey.

3.2.1 EZ Mode

The EZ Mode provides you an overview of the basic system information, and allows you to select the display language, system performance, mode and boot device priority. To access the Advanced Mode, select **Advanced Mode** or press the <F7> hotkey for the advanced BIOS settings.

The default screen for entering the BIOS setup program can be changed. Refer to the **Setup Mode** item in section **Boot menu** for details.

The boot device options vary depending on the devices you installed to the system.

3.2.2 Advanced Mode

The Advanced Mode provides advanced options for experienced end-users to configure the BIOS settings. The figure below shows an example of the Advanced Mode. Refer to the following sections for the detailed configurations.

To switch from EZ Mode to Advanced Mode, click **Advanced Mode(F7)** or press the <F7> hotkey.

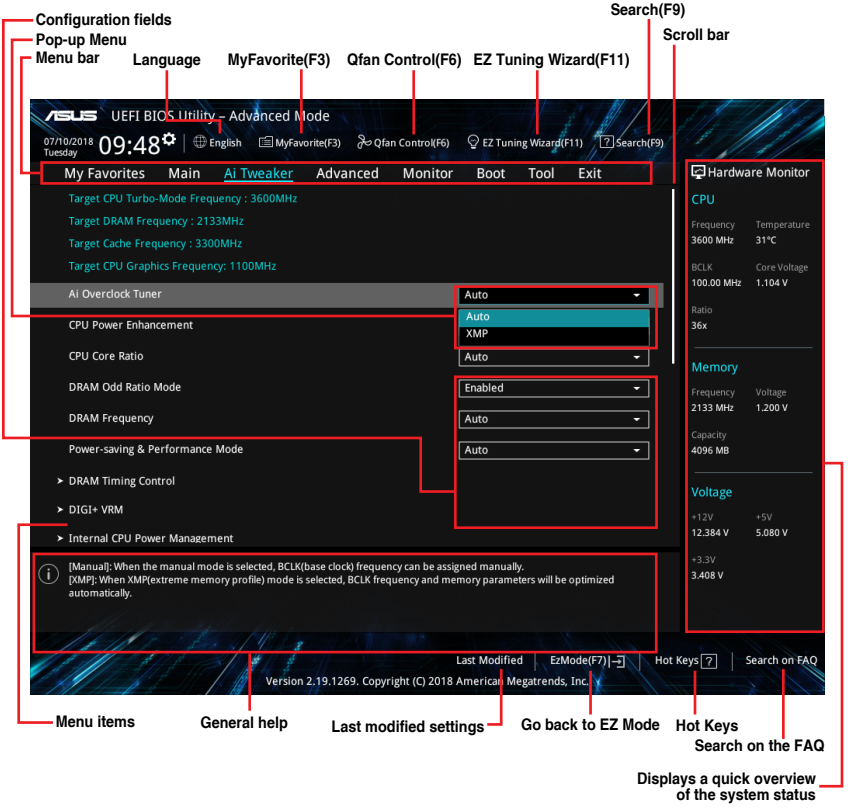

Menu bar

The menu bar on top of the screen has the following main items:

My Favorites	For saving the frequently-used system settings and configuration.
Main	For changing the basic system configuration
Ai Tweaker	For changing the overclocking settings
Advanced	For changing the advanced system settings
Monitor	For displaying the system temperature, power status, and changing the fan settings.
Boot	For changing the system boot configuration
Tool	For configuring options for special functions
Exit	For selecting the exit options and loading default settings

Menu items

The highlighted item on the menu bar displays the specific items for that menu. For example, selecting **Main** shows the Main menu items.

The other items (My Favorites, Ai Tweaker, Advanced, Monitor, Boot, Tool, and Exit) on the menu bar have their respective menu items.

Submenu items

A greater than sign (>) before each item on any menu screen means that the item has a submenu. To display the submenu, select the item and press <Enter>.

Language

This button above the menu bar contains the languages that you can select for your BIOS. Click this button to select the language that you want to display in your BIOS screen.

My Favorites(F3)

This button above the menu bar shows all BIOS items in a Tree Map setup. Select frequently-used BIOS settings and save it to MyFavorites menu.

Refer to section **3.3 My Favorites** for more information.

Q-Fan Control(F6)

This button above the menu bar displays the current settings of your fans. Use this button to manually tweak the fans to your desired settings.

Refer to section **3.2.3 QFan Control** for more information.

EZ Tuning Wizard(F11)

This button above the menu bar allows you to view and tweak the overclocking settings of your system.

Refer to section **3.2.4 EZ Tuning Wizard** for more information.

Search (F9)

This button allows you to search for BIOS items by entering its name, enter the item name to find the related item listing.

Hot keys

This button contains the navigation keys for the BIOS setup program. Use the navigation keys to select items in the menu and change the settings.

Search on FAQ

Move your mouse over this button to show a QR code, scan this QR code on your mobile device to connect to the BIOS FAQ web page of the ASUS support website. You can also scan the following QR code:

Scroll bar

A scroll bar appears on the right side of a menu screen when there are items that do not fit on the screen. Press the Up/Down arrow keys or <Page Up> / <Page Down> keys to display the other items on the screen.

General help

At the bottom of the menu screen is a brief description of the selected item. Use <F12> key to capture the BIOS screen and save it to the removable storage device.

Configuration fields

These fields show the values for the menu items. If an item is user-configurable, you can change the value of the field opposite the item. You cannot select an item that is not user-configurable.

A configurable field is highlighted when selected. To change the value of a field, select it and press <Enter> to display a list of options.

Last Modified button

This button shows the items that you last modified and saved in BIOS Setup.

3.2.3 Q-Fan Control

The QFan Control allows you to set a fan profile or manually configure the operating speed of your CPU and chassis fans.

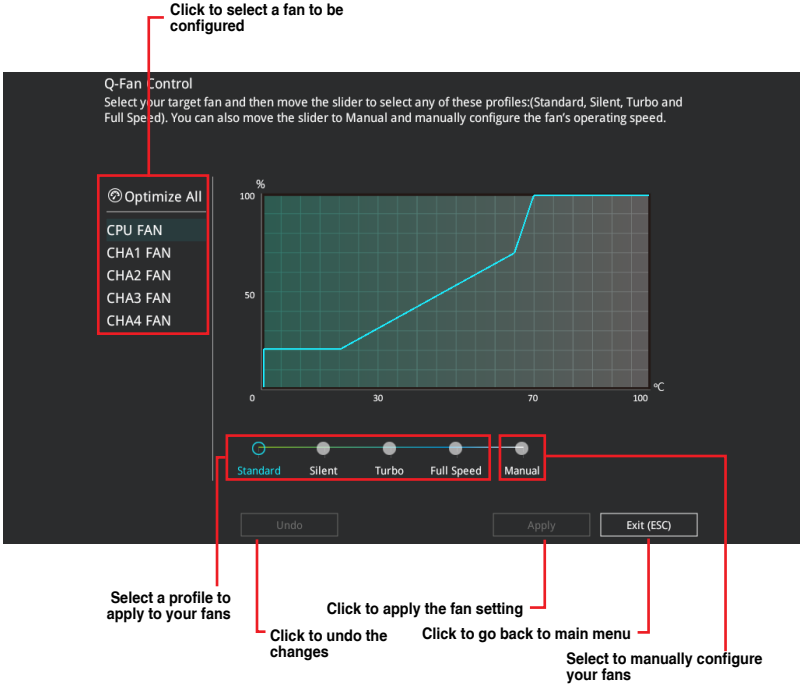

Chapter 3

Configuring fans manually

Select **Manual** from the list of profiles to manually configure your fans' operating speed.

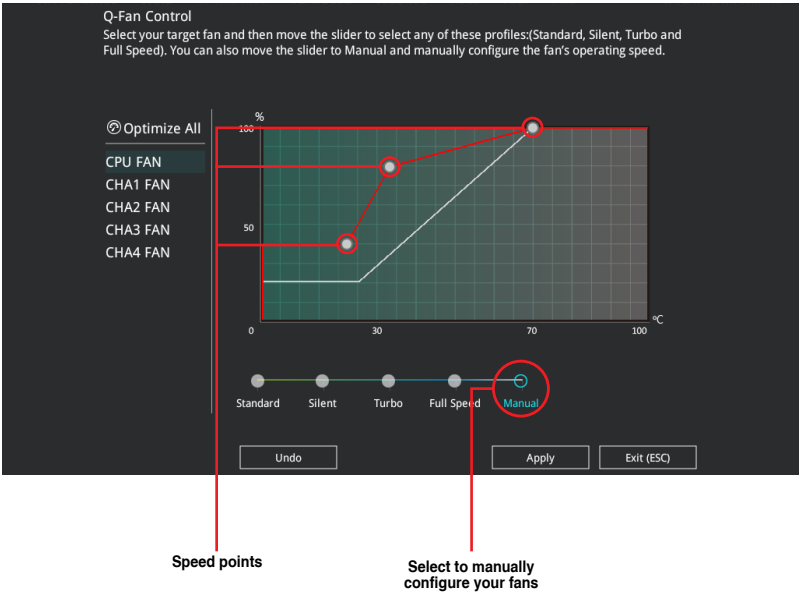

To configure your fans:

1. Select the fan that you want to configure and to view its current status.
2. Click and drag the speed points to adjust the fans' operating speed.
3. Click **Apply** to save the changes then click **Exit (ESC)**.

3.2.4 EZ Tuning Wizard

EZ Tuning Wizard allows you to easily set RAID in your system using this feature.

Creating RAID

To create RAID:

1. Press <F11> on your keyboard or click EZ Tuning Wizard(F11) from the BIOS screen to open EZ Tuning Wizard screen.
2. Click **Yes** to enable RAID.

- Ensure that your HDDs have no existing RAID volumes.
- Ensure to connect your HDDs to Intel® SATA connectors.

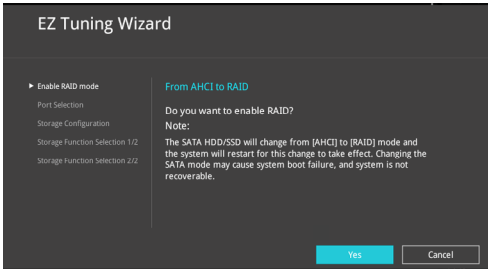

3. Select the port that you want to set to [RAID] mode, **PCIE** or **SATA**, then click **Next**.

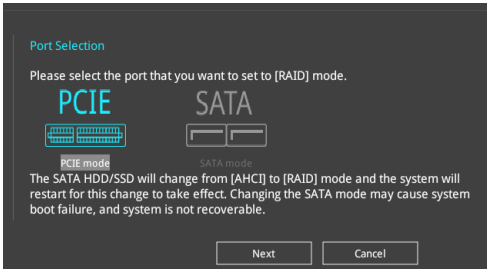

4. Select the type of storage for your RAID, **Easy Backup** or **Super Speed**, then click **Next**.

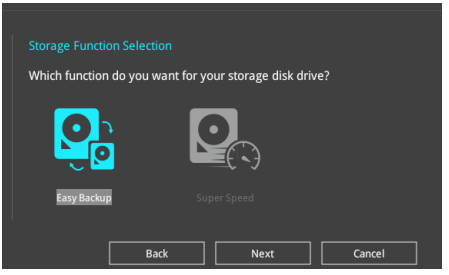

a. For Easy Backup, click **Next** then select from **Easy Backup (RAID 1)** or **Easy Backup (RAID 10)**.

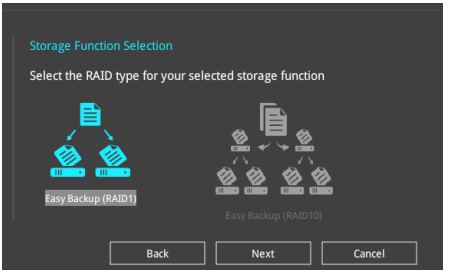

You can only select Easy Backup (RAID 10) if you connect four (4) HDDs.

b. For Super Speed, click **Next** then select from **Super Speed (RAID 0)** or **Super Speed (RAID 5)**.

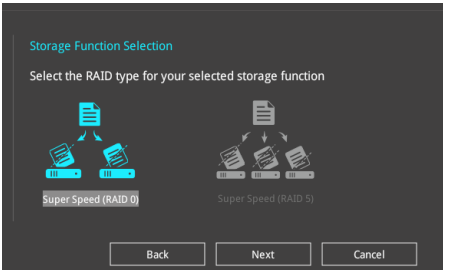

5. After selecting the type of RAID, click **Next** then click **Yes** to continue the RAID setup.
6. After the RAID setup is done, click **Yes** to exit the setup then click **OK** to reset your system.

3.3 My Favorites

My Favorites is your personal space where you can easily save and access your favorite BIOS items.

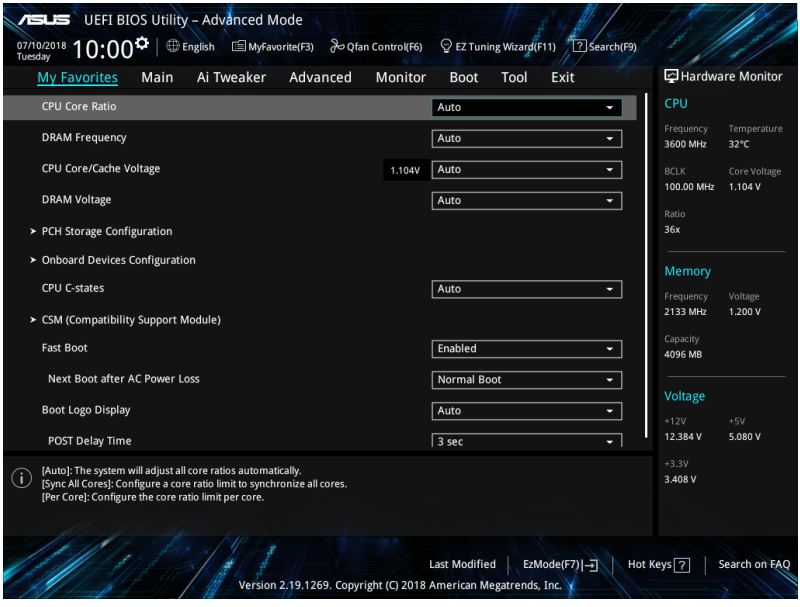

My Favorites comes with several performance, power saving, and fast boot related items by default. You can personalize this screen by adding or removing items.

Chapter 3

Adding items to My Favorites

To add BIOS items:

1. Press <F3> on your keyboard or click (F3)MyFavorite from the BIOS screen to open Setup Tree Map screen.
2. On the Setup Tree Map screen, select the BIOS items that you want to save in My Favorites screen.

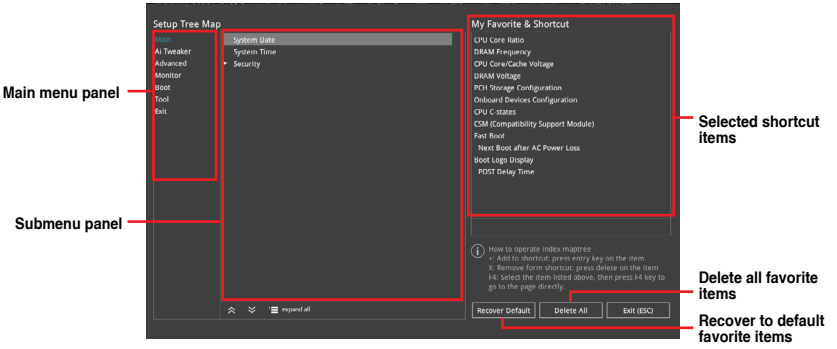

3. Select an item from main menu panel, then click the submenu that you want to save as favorite from the submenu panel and click + or press <Enter> on your keyboard.

You cannot add the following items to My Favorite items:

- Items with submenu options
- User-managed items such as language and boot order
- Configuration items such as Memory SPD Information, system time and date.

4. Click **Exit (ESC)** or press <Esc> key to close Setup Tree Map screen.
5. Go to My Favorites menu to view the saved BIOS items.

3.4 Main menu

The Main menu screen appears when you enter the Advanced Mode of the BIOS Setup program. The Main menu provides you an overview of the basic system information, and allows you to set the system date, time, language, and security settings.

Security

The Security menu items allow you to change the system security settings.

- If you have forgotten your BIOS password, erase the CMOS Real Time Clock (RTC) RAM to clear the BIOS password. See section **1.1.7 Jumper** for information on how to erase the RTC RAM via the Clear RTC RAM jumper.
- The Administrator or User Password items on top of the screen show the default **[Not Installed]**. After you set a password, these items show **[Installed]**.

3.5 Ai Tweaker menu

The Ai Tweaker menu items allow you to configure overclocking-related items.

Be cautious when changing the settings of the Ai Tweaker menu items. Incorrect field values can cause the system to malfunction

The configuration options for this section vary depending on the CPU and DIMM model you installed on the motherboard.

CPU Core Ratio

This item allows you to set the CPU core ratios.

Configuration options: [Auto] [Sync All Cores] [Per Core]

DRAM Frequency

This item allows you to set the memory operating frequency. The configurable options vary with the BCLK (base clock) frequency setting. Select the auto mode to apply the optimized setting.

Configuration options: [Auto] [DDR4-800MHz] - [DDR4-8533MHz]

Internal CPU Power Management

The subitems in this menu allow you to set the CPU ratio and features.

Intel(R) SpeedStep(tm)

Allows the operating system to dynamically adjust the processor voltage and cores frequency to decrease the average power consumption and decrease average heat production.

Configuration options: [Auto] [Enabled] [Disabled]

3.6 Advanced menu

The Advanced menu items allow you to change the settings for the CPU and other system devices.

Be cautious when changing the settings of the Advanced menu items. Incorrect field values can cause the system to malfunction.

3.6.1 Platform Misc Configuration

The items in this menu allow you to change the ASPM for PCH and SA PCI Express.

3.6.2 CPU Configuration

The items in this menu show the CPU-related information that the BIOS automatically detects.

The items in this menu may vary based on the CPU installed.

CPU - Power Management Control

This item allows you to manage and configure the CPU's power.

Intel(R) SpeedStep(tm)

This item allows more than two frequency to be supported.
Configuration options: [Auto] [Disabled] [Enabled]

CPU C-states

This item allows you to set the power saving of the CPU states.
Configuration options: [Auto] [Disabled] [Enabled]

3.6.3 System Agent (SA) Configuration

The items in this menu allow you to adjust the Link Speed for PEG Port and Multi-Monitor.

3.6.4 PCH Configuration

The items in this menu allow you to adjust the PCH PCI Express speed.

PCI Express Configuration

This item allows you to configure the PCI Express slots.

PCIe Speed

This item allows your system to automatically select the PCI Express port speed.
Configuration options: [Auto] [Gen1] [Gen2] [Gen3]

3.6.5 PCH Storage Configuration

While entering Setup, the BIOS automatically detects the presence of SATA devices. The SATA Port items show **Not Present** if no SATA device is installed to the corresponding SATA port.

SATA Controller(s)

This item allows you to enable or disable the SATA Device.

Configuration options: [Enabled] [Disabled]

The following items appear only when **SATA Controller(s)** is set to **[Enabled]**.

SATA Mode Selection

This item allows you to set the SATA configuration.

[AHCI]	Set to [AHCI] when you want the SATA hard disk drives to use the AHCI (Advanced Host Controller Interface). The AHCI allows the onboard storage driver to enable advanced Serial ATA features that increases storage performance on random workloads by allowing the drive to internally optimize the order of commands.
[Intel RST Premium With Intel Optane System Acceleration (RAID)]	Set to [Intel RST Premium With Intel Optane System Acceleration (RAID)] when you want to create a RAID configuration from the SATA hard disk drives.

SMART Self Test

SMART (Self-Monitoring, Analysis and Reporting Technology) is a monitoring system that shows a warning message during POST (Power-on Self Test) when an error occurs in the hard disks.

Configuration options: [On] [Off]

SATA6G_1(Gray) - SATA6G_8(Gray)

SATA6G_1 - SATA6G_8

This item allows you to enable or disable the selected SATA port.
Configuration options: [Disabled] [Enabled]

Hot Plug

These items appears only when the **SATA Mode** is set to **[AHCI]** and allows you to enable or disable SATA Hot Plug Support.
Configuration options: [Disabled] [Enabled]

- SATA6G_5 and SATA6G_6 is only available when **PCIEX16_4 & SATA5/6/7/8 Configuration** is set to **[PCIEX16_4 x2 mode & SATA5/6]**.
- SATA6G_5 to SATA6G_8 is only available when **PCIEX16_4 & SATA5/6/7/8 Configuration** is set to **[SATA5/6/7/8 mode]**.

3.6.6 PCH-FW Configuration

This item allows you to configure the firmware TPM.

3.6.7 Onboard Devices Configuration

The items in this menu allow you to switch between PCIe Lanes and configure onboard devices.

HD Audio

This item allows you to use the Azalia High Definition Audio Controller.

Configuration options: [Disabled] [Enabled]

Intel LAN1-2 Controller

This item allows you to enable or disable the Intel LAN controllers.

Configuration options: [Disabled] [Enabled]

PCIEX16_4 & SATA5/6/7/8 Configuration

[PCIEX16_4 x2 mode & SATA5/6]	Enable SATA port 5 and port 6. PCIEX16_4 width is x2.
[SATA5/6/7/8 mode]	Supports all SATA devices. Please note that PCIEX16_4 cannot be used in this mode.
[PCIEX16_4 x4 mode]	Only supports PCIEX16_4. Please note that from SATA port 5 to port 8 cannot be used in this mode.

3.6.8 APM Configuration

The items in this menu allow you to set system wake and sleep settings.

ErP Ready

This item allows you to switch off some power at S4+S5 or S5 to get the system ready for ErP requirement. When set to **[Enabled]**, all other PME options are switched off.

Configuration options: [Disabled] [Enable(S4+S5)] [Enable(S5)]

3.6.9 USB Configuration

The items in this menu allow you to change the USB-related features.

The **Mass Storage Devices** item shows the auto-detected values. If no USB device is detected, the item shows **None**.

USB Single Port Control

This item allows you to enable or disable the individual USB ports.

Refer to section **1.1.2 Motherboard layout** for the location of the USB ports.

3.6.10 Network Stack Configuration

The items in this menu allow you to configure Ipv4 / Ipv6 PXE support.

3.6.11 NVMe Configuration

You may view the NVMe controller and Drive information if a NVMe device is connected.

3.6.12 HDD/SSD SMART Information

The items in this menu display the SMART information of the connected devices.

NVM Express devices do not support SMART information.

3.7 Monitor menu

The Monitor menu displays the system temperature/power status, and allows you to change the fan settings.

Qfan Configuration

Qfan Tuning

Click this item to automatically detect the lowest speed and configure the minimum duty cycle for each fan.

3.8 Boot menu

The Boot menu items allow you to change the system boot options.

Boot Configuration

Setup Mode

[Advanced Mode]	This item allows you to go to Advanced Mode of the BIOS after POST.
[EZ Mode]	This item allows you to go to EZ Mode of the BIOS after POST.

CSM (Compatibility Support Module)

This item allows you to configure the CSM (Compatibility Support Module) items to fully support the various VGA, bootable devices and add-on devices for better compatibility.

Launch CSM

[Enabled]	For better compatibility, enable the CSM to fully support the non-UEFI driver add-on devices or the Windows® UEFI mode.
[Disabled]	Disable the CSM to fully support the non-UEFI driver add-on devices or the Windows® UEFI mode.

The following items appear only when you set the Launch CSM to **[Enabled]**.

Boot Devices Control
This item allows you to select the type of devices that you want to boot.

Configuration options: [UEFI and Legacy OPROM] [Legacy OPROM only] [UEFI only]

Boot from Network Devices
This item allows you to select the type of network devices that you want to launch.

Configuration options: [Ignore] [Legacy only] [UEFI driver first]

Boot from Storage Devices
This item allows you to select the type of storage devices that you want to launch.

Configuration options: [Ignore] [Legacy only] [UEFI driver first]

Boot from PCI-E/PCI Expansion Devices
This item allows you to select the type of PCI-E/PCI expansion devices that you want to launch.

Configuration options: [Legacy only] [UEFI driver first]

Secure Boot

This item allows you to configure the Windows® Secure Boot settings and manage its keys to protect the system from unauthorized access and malwares during POST.

Fast Boot

[Disabled] Allows your system to go back to its normal boot speed.

[Enabled] Allows your system to accelerate the boot speed.

The following items appear only when you set **Fast Boot** to **[Enabled]**.

Next Boot after AC Power Loss

[Normal Boot] Returns to normal boot on the next boot after an AC power loss.

[Fast Boot] Accelerates the boot speed on the next boot after an AC power loss.

Boot Option Priorities

These items specify the boot device priority sequence from the available devices. The number of device items that appears on the screen depends on the number of devices installed in the system.

- To access Windows® OS in Safe Mode, press <F8> after POST (Windows® 8 not supported).
- To select the boot device during system startup, press <F8> when the ASUS Logo appears.

Boot Override

These items displays the available devices. The number of device items that appears on the screen depends on the number of devices installed in the system. Click an item to start booting from the selected device.

3.9 Tool menu

The Tool menu items allow you to configure options for special functions. Select an item then press <Enter> to display the submenu.

Setup Animator

This item allows you to enable or disable the Setup animator.

Configuration options: [Enabled] [Disabled]

3.9.1 ASUS EZ Flash 3 Utility

This item allows you to run ASUS EZ Flash 3. When you press <Enter>, a confirmation message appears. Use the left/right arrow key to select between [Yes] or [No], then press <Enter> to confirm your choice.

For more details, refer to section **3.11.2 ASUS EZ Flash 3**.

3.9.2 ASUS Secure Erase

SSD speeds may lower over time as with any storage medium due to data processing. Secure Erase completely and safely cleans your SSD, restoring it to factory performance levels.

Secure Erase is only available in AHCI mode. Ensure to set the SATA mode to AHCI. Click **Advanced > PCH Storage Configuration > SATA Mode Selection > AHCI.**

To launch Secure Erase, click **Tool > Secure Erase** on the Advanced mode menu.

Check the ASUS support site for a full list of SSDs tested with Secure Erase. The drive may become unstable if you run Secure Erase on an incompatible SSD.

The time to erase the contents of your SSD may take a while depending on its size. Do not turn off the system during the process.

Status definition:

- **Frozen.** The frozen state is the result of a BIOS protective measure. The BIOS guards drives that do not have password protection by freezing them prior to booting. If the drive is frozen, a power off or hard reset of your PC must be performed to proceed with the Secure Erase.
- **Locked.** SSDs might be locked if the Secure Erase process is either incomplete or was stopped. This may be due to a third party software that uses a different password defined by ASUS. You have to unlock the SSD in the software before proceeding with Secure Erase.

3.9.3 ASUS User Profile

This item allows you to store or load multiple BIOS setting profiles.

Load Profile

This item allows you to load the previous BIOS settings saved in the BIOS Flash. Key in the profile number that saved your BIOS settings, press <Enter>, and then select **Yes**.

- DO NOT shut down or reset the system while updating the BIOS to prevent the system boot failure!
- We recommend that you update the BIOS file only coming from the same memory/ CPU configuration and BIOS version.

Profile Name

This item allows you to key in a profile name.

Save to Profile

This item allows you to save the current BIOS settings to the BIOS Flash, and create a profile. Key in a profile number from one to eight, press <Enter>, and then select **Yes**.

Load/Save Profile from/to USB Drive

This item allows you to load or save profile from your USB drive, load and save profile to your USB drive.

3.9.4 ASUS SPD Information

This item allows you to view the DRAM SPD information.

3.9.5 Graphics Card Information

This item displays the information about the graphics card installed in your system.

GPU Post

This item displays the information and recommended configuration for the PCIE slots that the graphics card is installed in your system.

This feature is only supported on selected ASUS graphics cards.

Bus Interface

This item allows you to select the bus interface.

3.10 Exit menu

The Exit menu items allow you to load the optimal default values for the BIOS items, and save or discard your changes to the BIOS items. You can access the EZ Mode from the Exit menu.

Load Optimized Defaults

This option allows you to load the default values for each of the parameters on the Setup menus. When you select this option or if you press <F5>, a confirmation window appears. Select **OK** to load the default values.

Save Changes & Reset

Once you are finished making your selections, choose this option from the Exit menu to ensure the values you selected are saved. When you select this option or if you press <F10>, a confirmation window appears. Select **OK** to save changes and exit.

Discard Changes and Exit

This option allows you to exit the Setup program without saving your changes. When you select this option or if you press <Esc>, a confirmation window appears. Select **Yes** to discard changes and exit.

Launch EFI Shell from USB drives

This item allows you to attempt to launch the EFI Shell application (shellx64.efi) from one of the available filesystem devices.

3.11 Updating BIOS

The ASUS website publishes the latest BIOS versions to provide enhancements on system stability, compatibility,and performance. However, BIOS updating is potentially risky. If there is no problem using the current version of BIOS, DO NOT manually update the BIOS. Inappropriate BIOS updating may result to system's failure to boot. Carefully follow the instructions in this chapter to update your BIOS when necessary.

Visit http://www.asus.com to download the latest BIOS file for this motherboard.

The following utilities allow you to manage and update the motherboard BIOS setup program.

1. EZ Update: Updates the BIOS in Windows® environment.
2. ASUS EZ Flash 3: Updates the BIOS using a USB flash drive.
3. ASUS CrashFree BIOS 3: Restores the BIOS using the motherboard support DVD or a USB flash drive when the BIOS file fails or gets corrupted.

3.11.1 EZ Update

The EZ Update is a utility that allows you to update the motherboard BIOS in Windows® environment.

- EZ Update requires an Internet connection either through a network or an ISP (Internet Service Provider).
- This utility is available in the support DVD that comes with the motherboard package.

3.11.2 ASUS EZ Flash 3

ASUS EZ Flash 3 allows you to download and update to the latest BIOS through the Internet without having to use a bootable floppy disk or an OS-based utility.

Updating through the Internet varies per region and Internet conditions. Check your local Internet connection before updating through the Internet.

To update the BIOS by USB:

1. Enter the Advanced Mode of the BIOS setup program. Go to the Tool menu to select **ASUS EZ Flash 3 Utility** and press <Enter>.
2. Insert the USB flash disk that contains the latest BIOS file to the USB port.
3. Select **via Storage Device(s).**

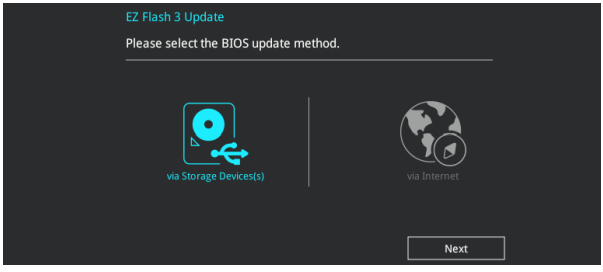

4. Press <Tab> to switch to the Drive field.
5. Press the Up/Down arrow keys to find the USB flash disk that contains the latest BIOS, and then press <Enter>.
6. Press <Tab> to switch to the Folder Info field.
7. Press the Up/Down arrow keys to find the BIOS file, and then press <Enter> to perform the BIOS update process. Reboot the system when the update process is done.

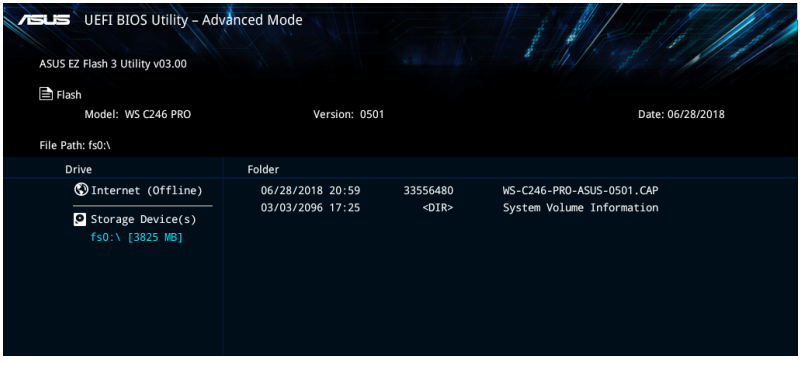

- This function can support devices such as a USB flash disk with FAT 32/16 format and single partition only.
- DO NOT shut down or reset the system while updating the BIOS to prevent system boot failure!

Ensure to load the BIOS default settings to ensure system compatibility and stability. Select the Load Optimized Defaults item under the Exit menu. See section **3.8 Exit Menu** for details.

To update the BIOS by Internet:

1. Enter the Advanced Mode of the BIOS setup program. Go to the Tool menu to select **ASUS EZ Flash 3 Utility** and press <Enter>.
2. Select **via Internet.**

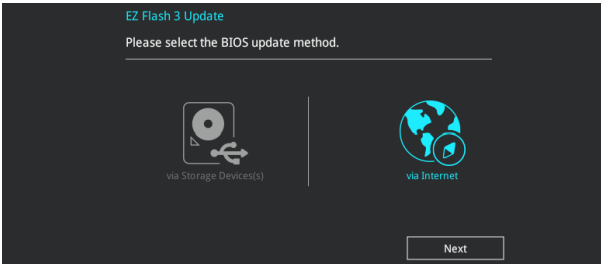

3. Press the Left/Right arrow keys to select an Internet connection method, and then press <Enter>.

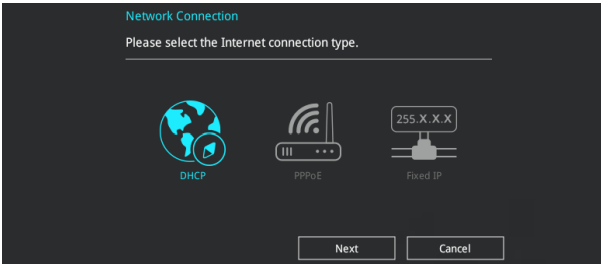

4. Follow the onscreen instructions to complete the update.
5. Reboot the system when the update process is done.

Ensure to load the BIOS default settings to ensure system compatibility and stability. Select the Load Optimized Defaults item under the Exit menu. See section **3.8 Exit Menu** for details.

3.11.3 ASUS CrashFree BIOS 3

The ASUS CrashFree BIOS 3 utility is an auto recovery tool that allows you to restore the BIOS file when it fails or gets corrupted during the updating process. You can restore a corrupted BIOS file using the motherboard support DVD or a USB flash drive that contains the BIOS file.

The BIOS file in the motherboard support DVD may be older than the BIOS file published on the ASUS official website. If you want to use the newer BIOS file, download the file at https://www.asus.com/support/ and save it to a USB flash drive.

Recovering the BIOS

To recover the BIOS:

1. Turn on the system.
2. Insert the motherboard support DVD to the optical drive, or the USB flash drive containing the BIOS file to the USB port.
3. The utility automatically checks the devices for the BIOS file. When found, the utility reads the BIOS file and enters ASUS EZ Flash 3 automatically.
4. The system requires you to enter BIOS Setup to recover the BIOS setting. To ensure system compatibility and stability, we recommend that you press <F5> to load default BIOS values.

DO NOT shut down or reset the system while updating the BIOS! Doing so can cause system boot failure!

RAID Support

4

4.1 RAID configurations

The motherboard supports Intel® Rapid Storage Technology with RAID 0, RAID 1, RAID 5, and RAID 10 solution.

If you want to install a Windows® operating system to a hard disk drive included in a RAID set, you have to create a RAID driver disk and load the RAID driver during OS installation. Refer to section **4.2 Creating a RAID driver disk** for details.

The screenshots shown in this section are for reference purposes only.

4.1.1 RAID definitions

RAID 0 (Data striping) optimizes two identical hard disk drives to read and write data in parallel, interleaved stacks. Two hard disks perform the same work as a single drive but at a sustained data transfer rate, double that of a single disk alone, thus improving data access and storage. Use of two new identical hard disk drives is required for this setup.

RAID 1 (Data mirroring) copies and maintains an identical image of data from one drive to a second drive. If one drive fails, the disk array management software directs all applications to the surviving drive as it contains a complete copy of the data in the other drive. This RAID configuration provides data protection and increases fault tolerance to the entire system. Use two new drives or use an existing drive and a new drive for this setup. The new drive must be of the same size or larger than the existing drive.

RAID 5 strips both data and parity information across three or more hard disk drives. Among the advantages of RAID 5 configuration include better HDD performance, fault tolerance, and higher storage capacity. The RAID 5 configuration is best suited for transaction processing, relational database applications, enterprise resource planning, and other business systems. Use a minimum of three identical hard disk drives for this setup.

RAID 10 is data striping and data mirroring combined without parity (redundancy data) having to be calculated and written. With the RAID 10 configuration you get all the benefits of both RAID 0 and RAID 1 configurations. Use four new hard disk drives or use an existing drive and three new drives for this setup.

4.1.2 Installing storage devices

The motherboard supports Serial ATA hard disk drives and PCIE SSD storage devices. For optimal performance, install identical drives of the same model and capacity when creating a disk array.

Refer to Chapter 2 for details on installing storage devices to your motherboard.

4.1.3 Intel® Rapid Storage Technology in UEFI BIOS

To enter the Intel® Rapid Storage Technology in UEFI BIOS:

1. Enter the BIOS Setup during POST.
2. Go to the **Advanced** menu > **PCH Storage Configuration**, then press <Enter>.
3. Set the **SATA Mode Selection** item to **[Intel RST Premium With Intel Optane System Acceleration(RAID)]**.
4. Go to the **Boot** menu > **CSM (Compatibility Support Module)** > **Launch CSM**, then set the item to **[Disabled]**.
5. Save your changes and exit the BIOS Setup, then enter the BIOS Setup again.
6. Go to the **Advanced** menu > **Intel(R) Rapid Storage Technology** then press <Enter> to display the Intel® Rapid Storage Technology menu.

Refer to Chapter 3 for details on entering and navigating through the BIOS Setup.

Due to chipset limitation, when SATA ports are set to RAID mode, all SATA ports run at RAID mode together.

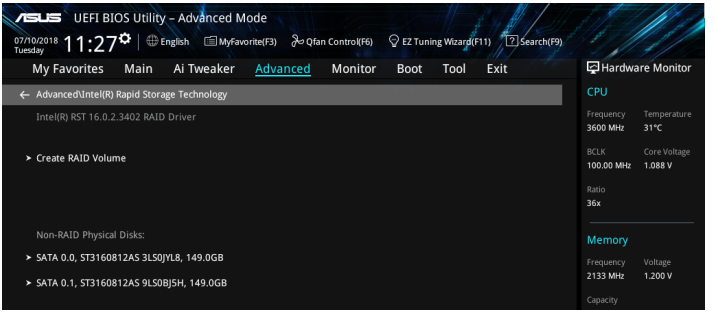

Creating a RAID set

To create a RAID set:

1. From the Intel® Rapid Storage Technology menu, select **Create RAID Volume** and press <Enter>. The following screen appears:

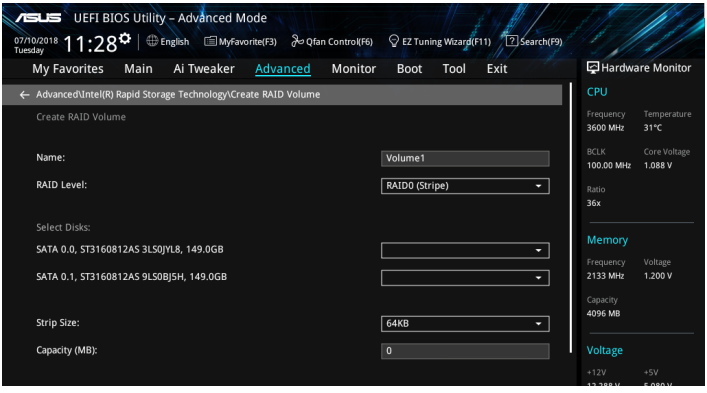

2. When the **Name** item is selected, enter a name for the RAID set and press <Enter>.
3. When the **RAID Level** item is selected, press <Enter> to select the RAID level to create, and then press <Enter>.
4. Under **Select Disks**, press <Enter> and select **X** for the disks you want to include in the RAID set.

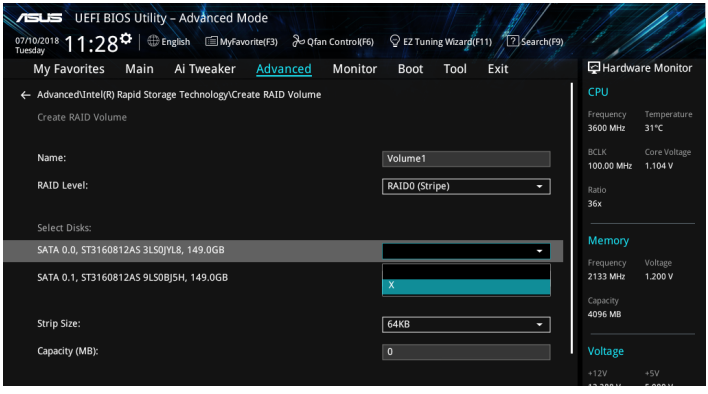

5. When the **Strip Size** item is selected, press <Enter> to select strip size for the RAID array (for RAID 0, 10 and 5 only), and then press <Enter>. The available strip size values range from 4 KB to 128 KB. The following are typical values:

   - RAID 0: 128 KB
   - RAID 10: 64 KB
   - RAID 5: 64 KB

We recommend a lower strip size for server systems, and a higher strip size for multimedia computer systems used mainly for audio and video editing.

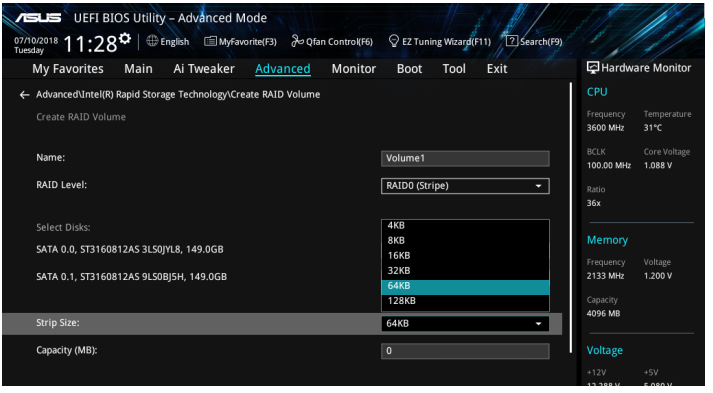

6. When the **Capacity (MB)** item is selected, enter the RAID volume capacity that you want and press <Enter>. The default value indicates the maximum allowed capacity.

7. When the **Create Volume** item is selected, press <Enter> to create the RAID volume and return to the Intel® Rapid Storage Technology menu.

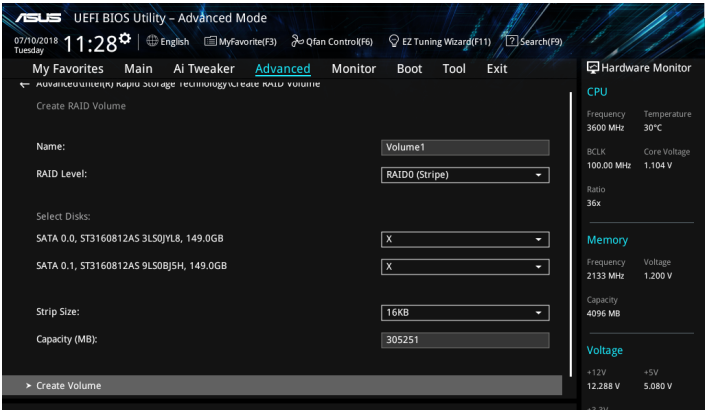

Deleting a RAID set

Be cautious when deleting a RAID set. You will lose all data on the hard disk drives when you delete a RAID set.

To delete a RAID set:

1. From the Intel® Rapid Storage Technology menu, select the RAID volume you want to delete and press <Enter>. The following screen appears:

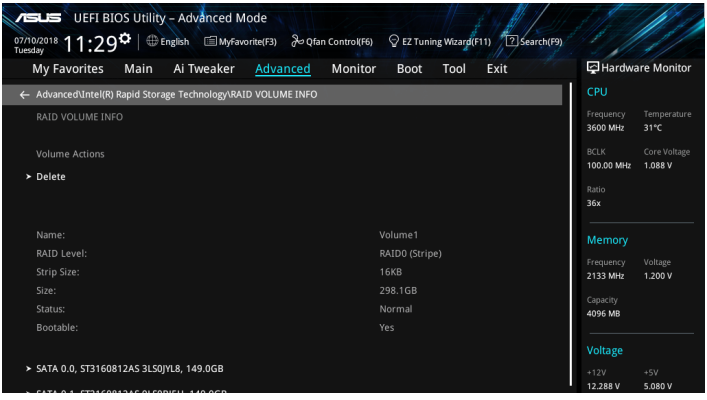

2. When the **Delete** item is selected, press <Enter>, then select **Yes** to delete the RAID volume and return to the Intel® Rapid Storage Technology menu, or select **No** to cancel.

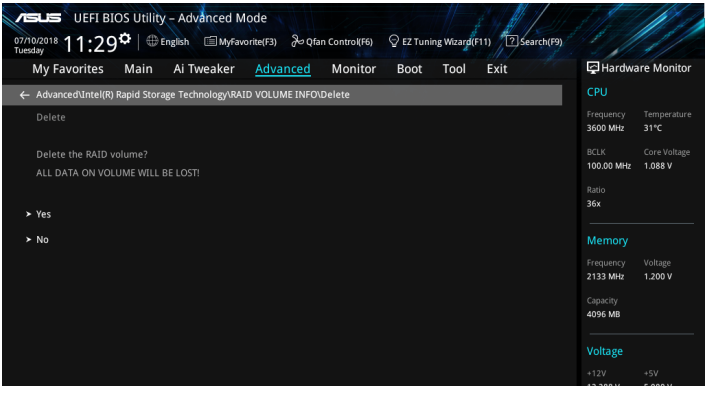

4.1.4 Intel® Rapid Storage Technology Option ROM utility

To enter the Intel® Rapid Storage Technology Option ROM utility:

1. Enter the BIOS Setup during POST.
2. Go to the **Boot** menu > **CSM (Compatibility Support Module)** > **Launch CSM**, then set the item to **[Enabled]**.
3. Save your changes and exit the BIOS Setup, then during POST, press <Ctrl> + <I> to display the utility main menu.

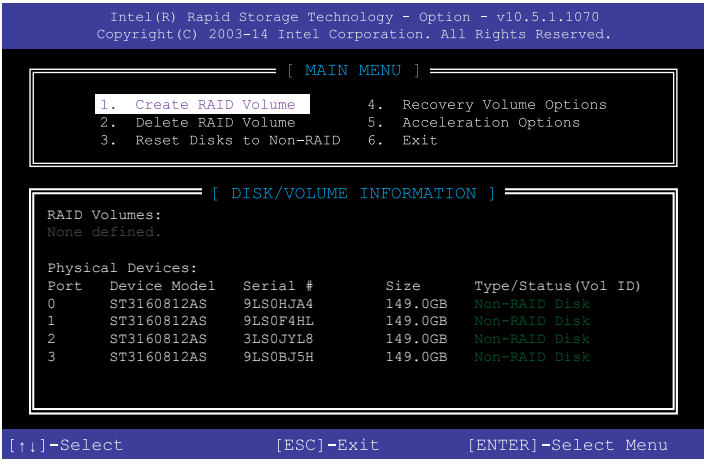

The navigation keys at the bottom of the screen allow you to move through the menus and select the menu options.

The RAID BIOS setup screens shown in this section are for reference only and may not exactly match the items on your screen.

The utility supports maximum four hard disk drives for RAID configuration.

Creating a RAID set

To create a RAID set:

1. From the utility main menu, select **1. Create RAID Volume** and press <Enter>. The following screen appears:

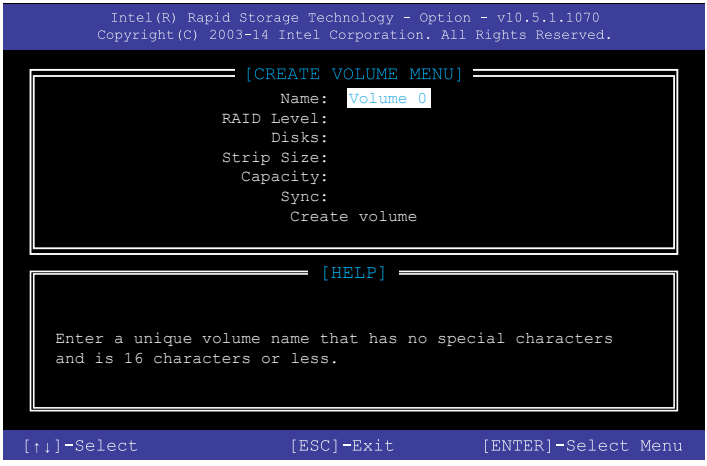

2. Enter a name for the RAID set and press <Enter>.
3. When the RAID Level item is selected, press the up/down arrow key to select a RAID level to create, and then press <Enter>.
4. When the Disks item is selected, press <Enter> to select the hard disk drives you want to include in the RAID set. The SELECT DISKS screen appears:

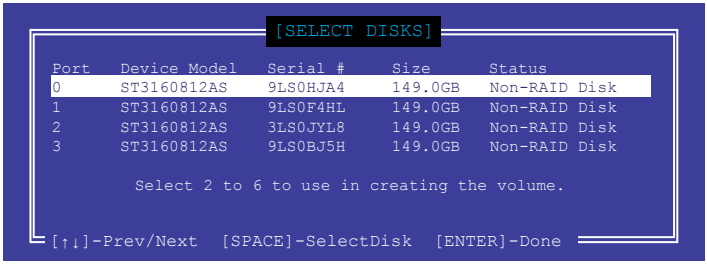

5. Use the up/down arrow key to select a drive, and then press <Space> to select. A small triangle marks the selected drive. Press <Enter> after completing your selection.

6. Use the up/down arrow key to select the strip size for the RAID array (for RAID 0, 10 and 5 only), and then press <Enter>. The available strip size values range from 4 KB to 128 KB. The following are typical values:

   - RAID 0: 128 KB
   - RAID 10: 64 KB
   - RAID 5: 64 KB

We recommend a lower strip size for server systems, and a higher strip size for multimedia computer systems used mainly for audio and video editing.

7. When the **Capacity** item is selected, enter the RAID volume capacity that you want and press <Enter>. The default value indicates the maximum allowed capacity.

8. When the **Create Volume** item is selected, press <Enter>. The following warning message appears:

9. Press <Y> to create the RAID volume and return to the main menu, or <N> to go back to the CREATE VOLUME menu.

Deleting a RAID set

Be cautious when deleting a RAID set. You will lose all data on the hard disk drives when you delete a RAID set.

To delete a RAID set:

1. From the utility main menu, select **2. Delete RAID Volume** and press <Enter>. The following screen appears:

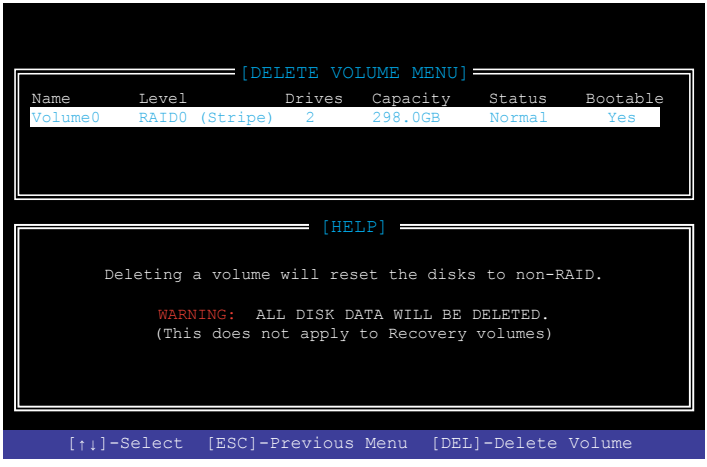

2. Use the up/down arrow key to select the RAID set you want to delete, and then press <Delete>. The following warning message appears:

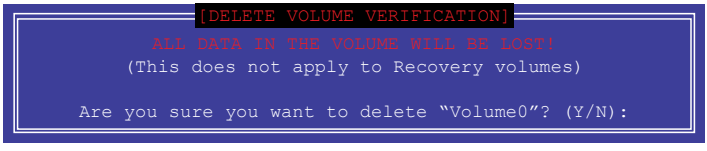

3. Press <Y> to delete the RAID set and return to the utility main menu, or press <N> to return to the DELETE VOLUME menu.

Exiting the Intel® Rapid Storage Technology Option ROM utility

To exit the utility:

1. From the utility main menu, select **6. Exit**, then press <Enter>. The following warning message appears:

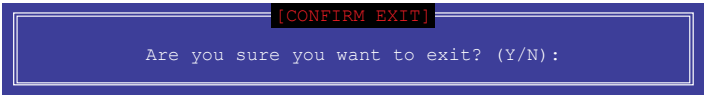

2. Press <Y> to exit or press <N> to return to the utility main menu.

4.2 Creating a RAID driver disk

4.2.1 Creating a RAID driver disk in Windows®

To install the RAID driver for Windows® OS:

1. During the OS installation, click **Load Driver** to allow you to select the installation media containing the RAID driver.
2. Insert the USB flash drive with RAID driver into the USB port or the support DVD into the optical drive, and then click **Browse**.
3. Click the name of the device you've inserted, go to **Drivers** > **RAID**, and then select the RAID driver for the corresponding OS version. Click **OK**.
4. Follow the succeeding screen instructions to complete the installation.

Before loading the RAID driver from a USB flash drive, you have to use another computer to copy the RAID driver from the support DVD to the USB flash drive.

To set up a Windows® UEFI operating system under RAID mode, ensure to load the UEFI driver for your optical drive.

Multiple GPU Support

5

5.1 AMD CrossFireX™ technology

The motherboard supports the AMD CrossFireX™ technology that allows you to install multi-graphics processing units (GPU) graphics cards. Follow the installation procedures in this section.

5.1.1 Requirements

- In Dual CrossFireX mode, you should have two identical CrossFireX-ready graphics cards or one CrossFireX-ready dual-GPU graphics card that are AMD certified.
- Ensure that your graphics card driver supports the AMD CrossFireX technology. Download the latest driver from the AMD website (www.amd.com).
- Ensure that your power supply unit (PSU) can provide at least the minimum power required by your system. See Chapter 1 for details.

- We recommend that you install additional chassis fans for better thermal environment.
- Visit the AMD Game website (http://game.amd.com) for the latest certified graphics card and the supported 3D application list.

5.1.2 Before you begin

For AMD CrossFireX™ to work properly, you have to uninstall all existing graphics card drivers before installing AMD CrossFireX™ graphics cards to your system.

To uninstall existing graphics card drivers:

1. Close all current applications.
2. Press the Windows key on your keyboard to bring up the Start menu.
3. Type Control Panel in the search box, then select **Control Panel**.
4. Select **Programs and Features**.
5. Select your current graphics card driver/s, then select **Uninstall/Change**.
6. Turn off your computer.

5.1.3 Installing two CrossFireX™ graphics cards

The following pictures are for reference only. The graphics cards and the motherboard layout may vary with models, but the installation steps remain the same.

To install two CrossFire™ graphics cards:

1. Prepare two CrossFireX-ready graphics cards.
2. Insert the two graphics card into the PCIEX16 slots. If your motherboard has more than two PCIEX16 slots, refer to Chapter 1 in this user manual for the locations of the PCIEX16 slots recommended for multi-graphics card installation.
3. Ensure that the cards are properly seated on the slots.
4. Align and firmly insert the CrossFireX bridge connector to the goldfingers on each graphics card. Ensure that the connector is firmly in place.

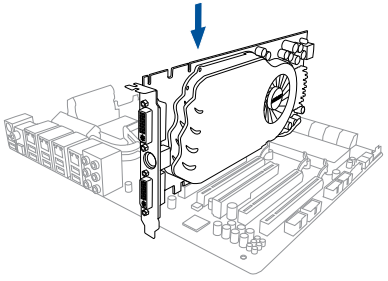

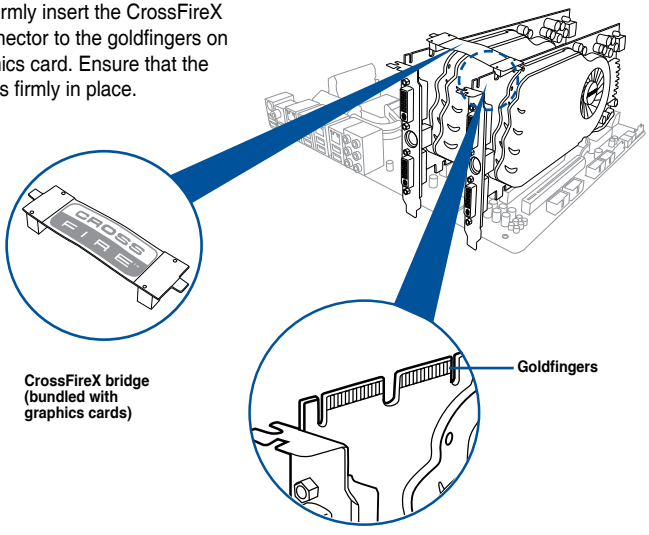

The CrossFireX™ bridge is only required for selected graphics cards.

5. Connect two independent auxiliary power sources from the power supply to the two graphics cards separately.
6. Connect a VGA or a DVI cable to the graphics card.

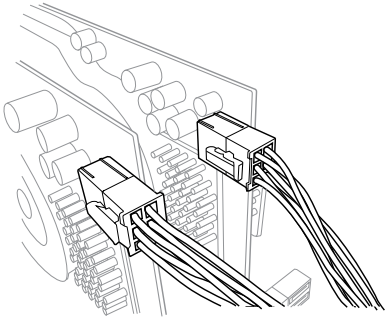

5.1.4 Installing three CrossFireX™ graphics cards

To install three CrossFire™ graphics cards:

1. Prepare three CrossFireX-ready graphics cards.
2. Insert the three graphics card into the PCIEX16 slots. If your motherboard has more than three PCIEX16 slots, refer to Chapter 1 in this user manual for the locations of the PCIEX16 slots recommended for multi-graphics card installation.
3. Ensure that the cards are properly seated on the slots.
4. Align and firmly insert the two CrossFireX™ bridge connectors to the goldfingers on each graphics card. Ensure that the connectors are firmly in place.

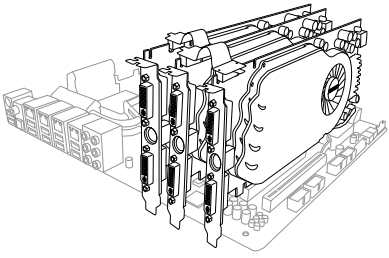

5. Connect three independent auxiliary power sources from the power supply to the three graphics cards separately.
6. Connect a VGA or a DVI cable to the graphics card.

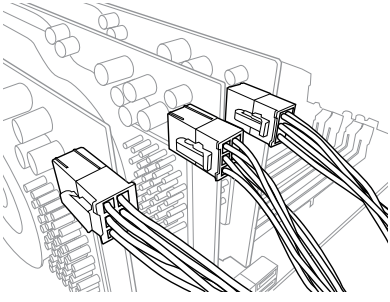

5.1.5 Installing the device drivers

Refer to the documentation that came with your graphics card package to install the device drivers.

Ensure that your PCI Express graphics card driver supports the AMD CrossFireX™ technology. Download the latest driver from the AMD website at www.amd.com.

5.1.6 Enabling the AMD CrossFireX™ technology

After installing your graphics cards and the device drivers, enable the CrossFireX™ feature through the AMD Vision Engine Control Center in Windows environment.

Launching the AMD VISION Engine Control Center

To launch the AMD VISION Engine Control Center:

Right-click on the Windows® desktop and select **AMD VISION Engine Control Center**.

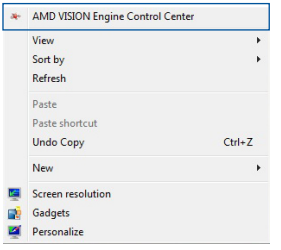

Enabling Dual CrossFireX™ technology

To enable Dual CrossFire™ technology:

1. In the AMD Vision Engine Control Center window, click **Performance > AMD CrossFireX™**.
2. Select **Enable CrossFireX™**.
3. Select a GPU combination from the drop-down list.
4. Click **Apply** to save and activate the GPU settings made.

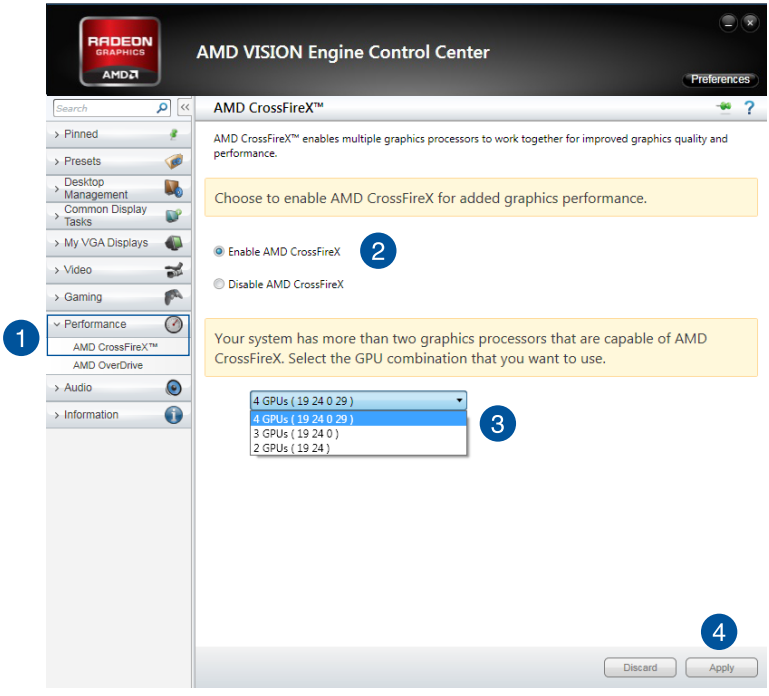

Appendix

WS C246 PRO block diagram

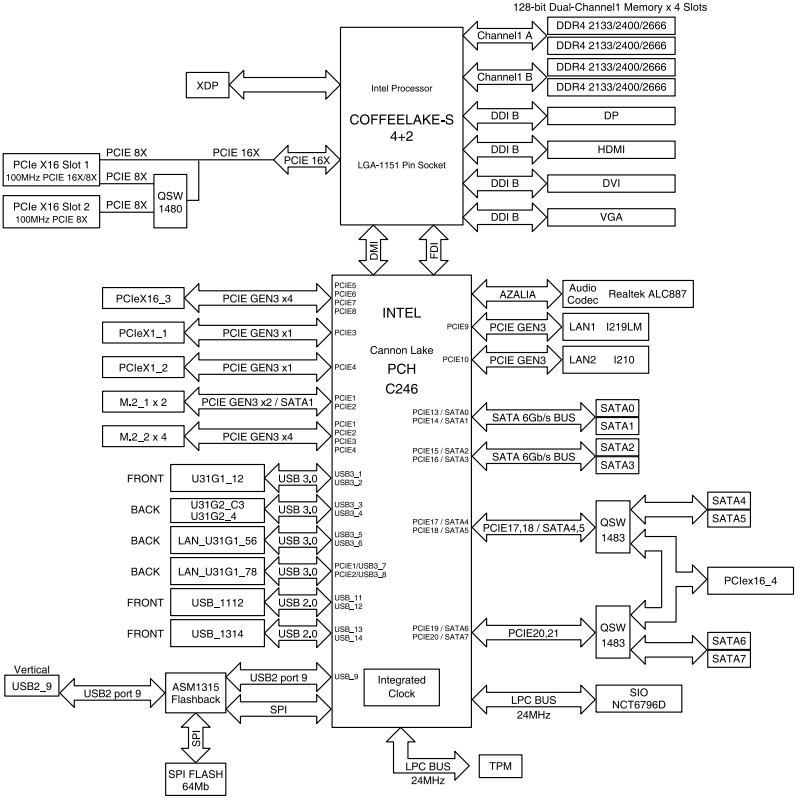

Q-Code table

Code	Description
00	Not used
02	microcode
03	CACHE_ENABLED
04	PCH initialization
06	CPU_EARLY_INIT
10	PEI Core is started
11 – 14	Pre-memory CPU initialization is started
15 – 18	Pre-memory System Agent initialization is started
19 – 1C	Pre-memory PCH initialization is started
2B – 2F	Memory initialization
30	Reserved for ASL (see ASL Status Codes section below)
31	Memory Installed
32 – 36	CPU post-memory initialization
37 – 3A	Post-Memory System Agent initialization is started
3B – 3E	Post-Memory PCH initialization is started
4F	DXE IPL is started
50 – 53	Memory initialization error. Invalid memory type or incompatible memory speed
4F	DXE IPL is started
54	Unspecified memory initialization error
55	Memory not installed
56	Invalid CPU type or Speed
57	CPU mismatch
58	CPU self test failed or possible CPU cache error
59	CPU micro-code is not found or micro-code update is failed
5A	Internal CPU error
5B	Reset PPI is not available
5C – 5F	Reserved for future AMI error codes
E0	S3 Resume is stared (S3 Resume PPI is called by the DXE IPL)
E1	S3 Boot Script execution
E2	Video repost
E3	OS S3 wake vector call
E4 – E7	Reserved for future AMI progress codes
E8	S3 Resume Failed
E9	S3 Resume PPI not Found
EA	S3 Resume Boot Script Error
EB	S3 OS Wake Error
EC – EF	Reserved for future AMI error codes
F0	Recovery condition triggered by firmware (Auto recovery)
F1	Recovery condition triggered by user (Forced recovery)
F2	Recovery process started
F3	Recovery firmware image is found
F4	Recovery firmware image is loaded
F5 – F7	Reserved for future AMI progress codes
F8	Recovery PPI is not available
F9	Recovery capsule is not found

(continued on the next page)

Code	Description
FA	Invalid recovery capsule
FB – FF	Reserved for future AMI error codes
60	DXE Core is started
61	NVRAM initialization
62	Installation of the PCH Runtime Services
63 – 67	CPU DXE initialization is started
68	PCI host bridge initialization
69	System Agent DXE initialization is started
6A	System Agent DXE SMM initialization is started
6B – 6F	System Agent DXE initialization (System Agent module specific)
70	PCH DXE initialization is started
71	PCH DXE SMM initialization is started
72	PCH devices initialization
73 – 77	PCH DXE Initialization (PCH module specific)
78	ACPI module initialization
79	CSM initialization
7A – 7F	Reserved for future AMI DXE codes
90	Boot Device Selection (BDS) phase is started
91	Driver connecting is started
92	PCI Bus initialization is started
93	PCI Bus Hot Plug Controller Initialization
94	PCI Bus Enumeration
95	PCI Bus Request Resources
96	PCI Bus Assign Resources
97	Console Output devices connect
98	Console input devices connect
99	Super IO Initialization
9A	USB initialization is started
9B	USB Reset
9C	USB Detect
9D	USB Enable
9E – 9F	Reserved for future AMI codes
A0	IDE initialization is started
A1	IDE Reset
A2	IDE Detect
A3	IDE Enable
A4	SCSI initialization is started
A5	SCSI Reset
A6	SCSI Detect
A7	SCSI Enable
A8	Setup Verifying Password
A9	Start of Setup
AA	Reserved for ASL (see ASL Status Codes section below)
AB	Setup Input Wait

(continued on the next page)

Code	Description
AC	Reserved for ASL (see ASL Status Codes section below)
AD	Ready To Boot event
AE	Legacy Boot event
AF	Exit Boot Services event
B0	Runtime Set Virtual Address MAP Begin
B1	Runtime Set Virtual Address MAP End
B2	Legacy Option ROM Initialization
B3	System Reset
B4	USB hot plug
B5	PCI bus hot plug
B6	Clean-up of NVRAM
B7	Configuration Reset (reset of NVRAM settings)
B8– BF	Reserved for future AMI codes
D0	CPU initialization error
D1	System Agent initialization error
D2	PCH initialization error
D3	Some of the Architectural Protocols are not available
D4	PCI resource allocation error. Out of Resources
D5	No Space for Legacy Option ROM
D6	No Console Output Devices are found
D7	No Console Input Devices are found
D8	Invalid password
D9	Error loading Boot Option (LoadImage returned error)
DA	Boot Option is failed (StartImage returned error)
DB	Flash update is failed
DC	Reset protocol is not available

ACPI/ASL Checkpoints (under OS)

Code	Description
03	System is entering S3 sleep state
04	System is entering S4 sleep state
05	System is entering S5 sleep state
30	System is waking up from the S3 sleep state
40	System is waking up from the S4 sleep state
AC	System has transitioned into ACPI mode. Interrupt controller is in PIC mode.
AA	System has transitioned into ACPI mode. Interrupt controller is in APIC mode.

Notices

Federal Communications Commission Statement

This device complies with Part 15 of the FCC Rules. Operation is subject to the following two conditions:

- This device may not cause harmful interference.
- This device must accept any interference received including interference that may cause undesired operation.

This equipment has been tested and found to comply with the limits for a Class B digital device, pursuant to Part 15 of the FCC Rules. These limits are designed to provide reasonable protection against harmful interference in a residential installation. This equipment generates, uses and can radiate radio frequency energy and, if not installed and used in accordance with manufacturer's instructions, may cause harmful interference to radio communications. However, there is no guarantee that interference will not occur in a particular installation. If this equipment does cause harmful interference to radio or television reception, which can be determined by turning the equipment off and on, the user is encouraged to try to correct the interference by one or more of the following measures:

- Reorient or relocate the receiving antenna.
- Increase the separation between the equipment and receiver.
- Connect the equipment to an outlet on a circuit different from that to which the receiver is connected.
- Consult the dealer or an experienced radio/TV technician for help.

The use of shielded cables for connection of the monitor to the graphics card is required to assure compliance with FCC regulations. Changes or modifications to this unit not expressly approved by the party responsible for compliance could void the user's authority to operate this equipment.

Compliance Statement of Innovation, Science and Economic Development Canada (ISED)

This device complies with Innovation, Science and Economic Development Canada licence exempt RSS standard(s). Operation is subject to the following two conditions: (1) this device may not cause interference, and (2) this device must accept any interference, including interference that may cause undesired operation of the device.

CAN ICES-3(B)/NMB-3(B)

Déclaration de conformité de Innovation, Sciences et Développement économique Canada (ISED)

Le présent appareil est conforme aux CNR d'Innovation, Sciences et Développement économique Canada applicables aux appareils radio exempts de licence. L'exploitation est autorisée aux deux conditions suivantes : (1) l'appareil ne doit pas produire de brouillage, et (2) l'utilisateur de l'appareil doit accepter tout brouillage radioélectrique subi, même si le brouillage est susceptible d'en compromettre le fonctionnement.

CAN ICES-3(B)/NMB-3(B)

VCCI: Japan Compliance Statement

Class B ITE

この装置は、クラスB情報技術装置です。この装置は、家庭環境で使用することを目的としていますが、この装置がラジオやテレビジョン受信機に近接して使用されると、受信障害を引き起こすことがあります。

取扱説明書に従って正しい取り扱いをして下さい。

VCCI－B

KC: Korea Warning Statement

B급 기기 (가정용 방송통신기자재)
이 기기는 가정용(B급) 전자파적합기기로서 주로 가정에서 사용하는 것을 목적으로 하며, 모든 지역에서 사용할 수 있습니다.

REACH

Complying with the REACH (Registration, Evaluation, Authorisation, and Restriction of Chemicals) regulatory framework, we published the chemical substances in our products at ASUS REACH website at http://csr.asus.com/english/REACH.htm.

DO NOT throw the motherboard in municipal waste. This product has been designed to enable proper reuse of parts and recycling. This symbol of the crossed out wheeled bin indicates that the product (electrical and electronic equipment) should not be placed in municipal waste. Check local regulations for disposal of electronic products.

DO NOT throw the mercury-containing button cell battery in municipal waste. This symbol of the crossed out wheeled bin indicates that the battery should not be placed in municipal waste.

ASUS Recycling/Takeback Services

ASUS recycling and takeback programs come from our commitment to the highest standards for protecting our environment. We believe in providing solutions for you to be able to responsibly recycle our products, batteries, other components as well as the packaging materials. Please go to http://csr.asus.com/english/Takeback.htm for detailed recycling information in different regions.

Regional notice for California

WARNING

Cancer and Reproductive Harm -
www.P65Warnings.ca.gov

RF exposure warning

This equipment must be installed and operated in accordance with provided instructions and the antenna(s) used for this transmitter must be installed to provide a separation distance of at least 20 cm from all persons and must not be co-located or operating in conjunction with any other antenna or transmitter. End-users and installers must be provided with antenna installation instructions and transmitter operating conditions for satisfying RF exposure compliance.

Google™ License Terms

Copyright© 2019 Google Inc. All Rights Reserved.

Licensed under the Apache License, Version 2.0 (the “License”); you may not use this file except in compliance with the License. You may obtain a copy of the License at:

http://www.apache.org/licenses/LICENSE-2.0

Unless required by applicable law or agreed to in writing, software distributed under the License is distributed on an “AS IS” BASIS, WITHOUT WARRANTIES OR CONDITIONS OF ANY KIND, either express or implied.

See the License for the specific language governing permissions and limitations under the License.

English ASUSTeK Computer Inc. hereby declares that this device is in compliance with the essential requirements and other relevant provisions of related Directives. Full text of EU declaration of conformity is available at: www.asus.com/support

Français AsusTek Computer Inc. déclare par la présente que cet appareil est conforme aux critères essentiels et autres clauses pertinentes des directives concernées. La déclaration de conformité de l'UE peut être téléchargée à partir du site Internet suivant : www.asus.com/support

Deutsch ASUSTeK Computer Inc. erklärt hiermit, dass dieses Gerät mit den wesentlichen Anforderungen und anderen relevanten Bestimmungen der zugehörigen Richtlinien übereinstimmt. Der gesamte Text der EU-Konformitätserklärung ist verfügbar unter: www.asus.com/support

Italiano ASUSTeK Computer Inc. con la presente dichiara che questo dispositivo è conforme ai requisiti essenziali e alle altre disposizioni pertinenti con le direttive correlate. Il testo completo della dichiarazione di conformità UE è disponibile all'indirizzo: www.asus.com/support

Русский Компания ASUS заявляет, что это устройство соответствует основным требованиям и другим соответствующим условиям соответствующих директив. Подробную информацию, пожалуйста, смотрите на www.asus.com/support

Български С настоящото ASUSTeK Computer Inc. декларира, че това устройство е в съответствие със съществените изисквания и другите приложими постановления на свързаните директиви. Пълният текст на декларацията за съответствие на ЕС е достъпна на адрес: www.asus.com/support

Hrvatski ASUSTeK Computer Inc. ovim izjavljuje da je ovaj uređaj sukladan s bitnim zahtjevima i ostalim odgovarajućim odredbama vezanih direktiva. Cijeli tekst EU izjave o sukladnosti dostupan je na: www.asus.com/support

Čeština Společnost ASUSTeK Computer Inc. tímto prohlašuje, že toto zařízení splňuje základní požadavky a další příslušná ustanovení souvisejících směrnic. Plné znění prohlášení o shodě EU je k dispozici na adrese: www.asus.com/support

Dansk ASUSTeK Computer Inc. erklærer hermed, at denne enhed er i overensstemmelse med hovedkravene og andre relevante bestemmelser i de relaterede direktiver. Hele EU-overensstemmelseserklæringen kan findes på: www.asus.com/support

Nederlands ASUSTeK Computer Inc. verklaart hierbij dat dit apparaat voldoet aan de essentiële vereisten en andere relevante bepalingen van de verwante richtlijnen. De volledige tekst van de EU-verklaring van conformiteit is beschikbaar op: www.asus.com/support

Eesti Käesolevaga kinnitab ASUSTeK Computer Inc, et see seade vastab asjakohaste direktiivide oluliste nõuetele ja teistele asjassepuutuvatele sätetele. EL vastavusdeklaratsiooni täielik tekst on saadaval järgmisel aadressil: www.asus.com/support

Suomi ASUSTeK Computer Inc. ilmoittaa täten, että tämä laite on asiaankuuluvien direktiivien olennaisten vaatimusten ja muiden tätä koskevien säädösten mukainen. EU-yhdenmukaisuusilmoituksen koko teksti on luettavissa osoitteessa: www.asus.com/support

Ελληνικά Με το παρόν, η AsusTek Computer Inc. δηλώνει ότι αυτή η συσκευή συμμορφώνεται με τις θεμελιώδεις απαιτήσεις και άλλες σχετικές διατάξεις των Οδηγιών της ΕΕ. Το πλήρες κείμενο της δήλωσης συμβατότητας είναι διαθέσιμο στη διεύθυνση: www.asus.com/support

Magyar Az ASUSTeK Computer Inc. ezennel kijelenti, hogy ez az eszköz megfelel a kapcsolódó Irányelvek lényeges követelményeinek és egyéb vonatkozó rendelkezéseinek. Az EU megfelelőségi nyilatkozat teljes szövege innen letölthető: www.asus.com/support

Latviski ASUSTeK Computer Inc. ar šo paziņo, ka šī ierīce atbilst saistīto Direktīvu būtiskajām prasībām un citiem citiem saistošajiem nosacījumiem. Pilns ES atbilstības paziņojuma teksts pieejams šeit: www.asus.com/support

Lietuvių „ASUSTeK Computer Inc." šiuo tvirtina, kad šis įrenginys atitinka pagrindinius reikalavimus ir kitas svarbias susijusių direktyvų nuostatas. Visą ES atitikties deklaracijos tekstą galima rasti: www.asus.com/support

Norsk ASUSTeK Computer Inc. erklærer herved at denne enheten er i samsvar med hovedsaklige krav og andre relevante forskrifter i relaterte direktiver. Fullstendig tekst for EU-samsvarserklæringen finnes på: www.asus.com/support

Polski Firma ASUSTeK Computer Inc. niniejszym oświadcza, że urządzenie to jest zgodne z zasadniczymi wymogami i innymi właściwymi postanowieniami powiązanych dyrektyw. Pełny tekst deklaracji zgodności UE jest dostępny pod adresem: www.asus.com/support

Português A ASUSTeK Computer Inc. declara que este dispositivo está em conformidade com os requisitos essenciais e outras disposições relevantes das Diretivas relacionadas. Texto integral da declaração da UE disponível em: www.asus.com/support

Română ASUSTeK Computer Inc. declară că acest dispozitiv se conformează cerințelor esențiale și altor prevederi relevante ale directivelor conexe. Textul complet al declarației de conformitate a Uniunii Europene se găsește la: www.asus.com/support

Srpski ASUSTeK Computer Inc. ovim izjavljuje da je ovaj uređaj u saglasnosti sa osnovnim zahtevima i drugim relevantnim odredbama povezanih Direktiva. Pun tekst EU deklaracije o usaglašenosti je dostupan da adresi: www.asus.com/support

Slovensky Spoločnosť ASUSTeK Computer Inc. týmto vyhlasuje, že toto zariadenie vyhovuje základným požiadavkám a ostatým príslušným ustanoveniam príslušných smerníc. Celý text vyhlásenia o zhode pre štáty EÚ je dostupný na adrese: www.asus.com/support

Slovenščina ASUSTeK Computer Inc. izjavlja, da je ta naprava skladna z bistvenimi zahtevami in drugimi ustreznimi določbami povezanih direktiv. Celotno besedilo EU-izjave o skladnosti je na voljo na spletnem mestu: www.asus.com/support

Español Por la presente, ASUSTeK Computer Inc. declara que este dispositivo cumple los requisitos básicos y otras disposiciones pertinentes de las directivas relacionadas. El texto completo de la declaración de la UE de conformidad está disponible en: www.asus.com/support

Svenska ASUSTeK Computer Inc. förklarar härmed att denna enhet överensstämmer med de grundläggande kraven och andra relevanta föreskrifter i relaterade direktiv. Fulltext av EU-försäkran om överensstämmelse finns på: www.asus.com/support

Українська ASUSTeK Computer Inc. заявляє, що цей пристрій відповідає основним вимогам та іншим відповідним положенням відповідних Директив. Повний текст декларації відповідності стандартам ЄС доступний на: www.asus.com/support

Türkçe AsusTek Computer Inc., bu aygıtın temel gereksinimlerle ve ilişkili Yönergelerin diğer ilgili koşullarıyla uyumlu olduğunu beyan eder. AB uygunluk bildiriminin tam metni şu adreste bulunabilir: www.asus.com/support

Bosanski ASUSTeK Computer Inc. ovim izjavljuje da je ovaj uređaj usklađen sa bitnim zahtjevima i ostalim odgovarajućim odredbama vezanih direktiva. Cijeli tekst EU izjave o usklađenosti dostupan je na: www.asus.com/support

ASUS contact information

ASUSTeK COMPUTER INC.

Address	4F, No. 150, Li-Te Road, Peitou, Taipei 112, Taiwan
Telephone	+886-2-2894-3447
Fax	+886-2-2890-7798
Web site	https://www.asus.com

Technical Support

Telephone	+86-21-38429911
Fax	+86-21-5866-8722, ext. 9101#
Online support	https://www.asus.com/support/Product/ContactUs/Services/questionform/?lang=en

ASUS COMPUTER INTERNATIONAL (America)

Address	48720 Kato Rd., Fremont, CA 94538, USA
Telephone	+1-510-739-3777
Fax	+1-510-608-4555
Web site	https://www.asus.com/us/

Technical Support

Support fax	+1-812-284-0883
Telephone	+1-812-282-2787
Online support	https://www.asus.com/support/Product/ContactUs/Services/questionform/?lang=en-us

ASUS COMPUTER GmbH (Germany and Austria)

Address	Harkort Str. 21-23, 40880 Ratingen, Germany
Fax	+49-2102-959931
Web site	https://www.asus.com/de

Technical Support

Telephone	+49-2102-5789555
Support Fax	+49-2102-959911
Online support	https://www.asus.com/support/Product/ContactUs/Services/questionform/?lang=de-de

FCC COMPLIANCE INFORMATION

Per FCC Part 2 Section 2.1077

Responsible Party:	**Asus Computer International**
Address:	**48720 Kato Rd., Fremont, CA 94538, USA**
Phone/Fax No:	**(510)739-3777/(510)608-4555**

hereby declares that the product

Product Name :	**Mother board**
Model Number :	**WS C246 PRO**

compliance statement:

This device complies with part 15 of the FCC Rules. Operation is subject to the following two conditions: (1) This device may not cause harmful interference, and (2) this device must accept any interference received, including interference that may cause undesired operation.

Ver. 180125