UL...X
UK...

(de) Dieses Produkt muss gemäß der geltenden Standards und Normen installiert und angeschlossen werden.
DIN VDE 0603 und DIN EN 61439

(en) This product must be installed, connected and used in compliance with prevailing standards and/or installation regulations.
DIN VDE 0603 and DIN EN 61439

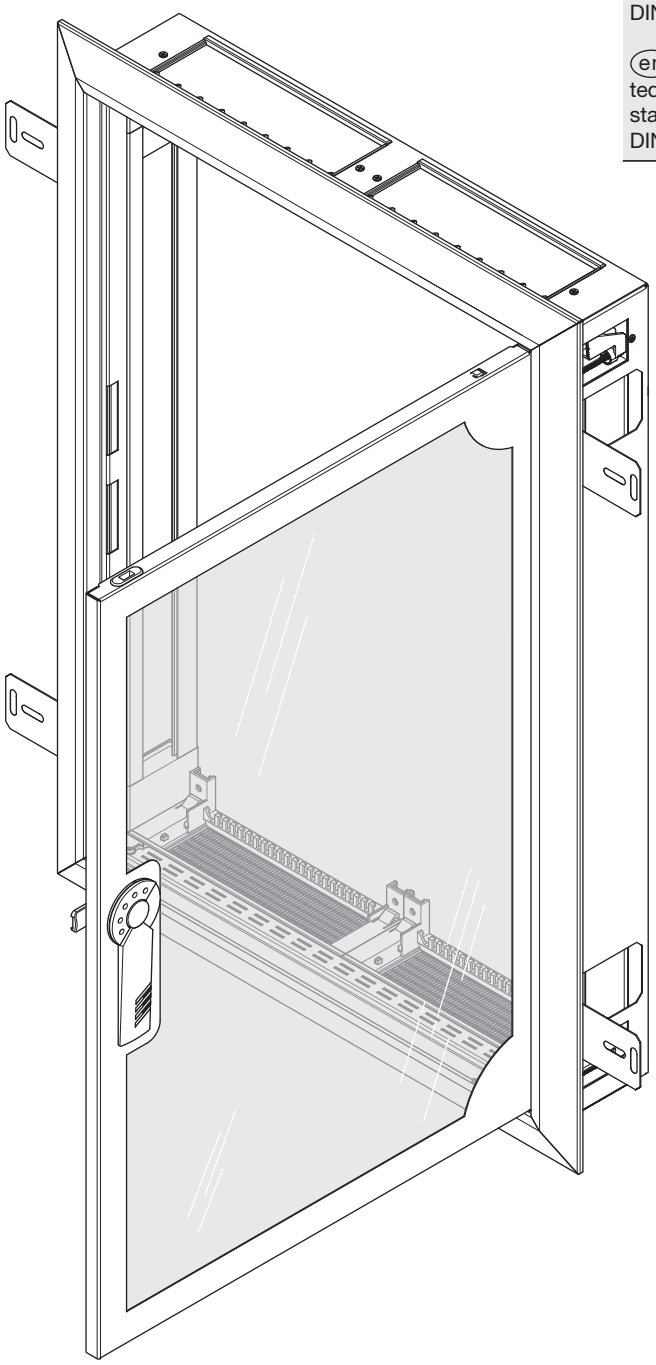

ABN GmbH, Daimlerstraße 10 - 12, D-74196 Neuenstadt,
Fon: +49 (0) 71 39 / 94 - 0, Fax: +49 (0) 71 39 / 94 - 49, E-Mail: de-abn-zentrale@se.com, www.abn-elektro.de

All Rights Reserved
Printed in Germany (04/21) E-MAULX_04

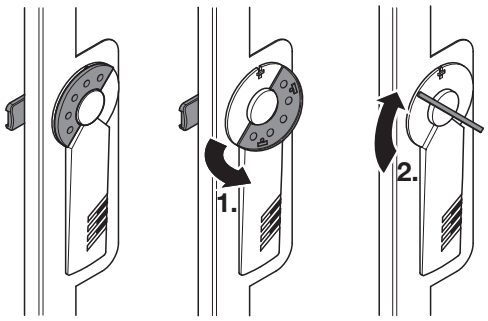

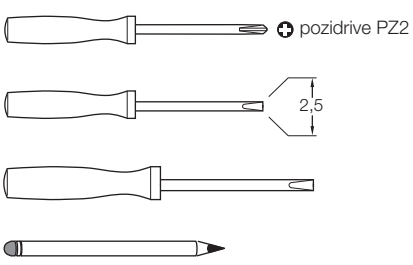

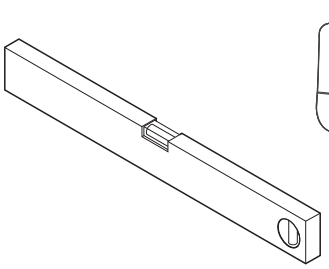

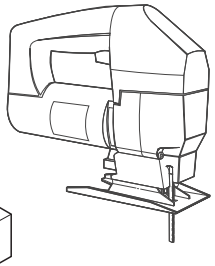

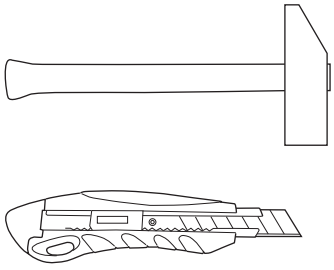

ABN GmbH, Daimlerstraße 10 - 12, D-74196 Neuenstadt,
Fon: +49 (0) 71 39 / 94 - 0, Fax: +49 (0) 71 39 / 94 - 49, E-Mail: de-abn-zentrale@se.com, www.abn-elektro.de

All Rights Reserved

Printed in Germany (04/21) E-MAULX_04

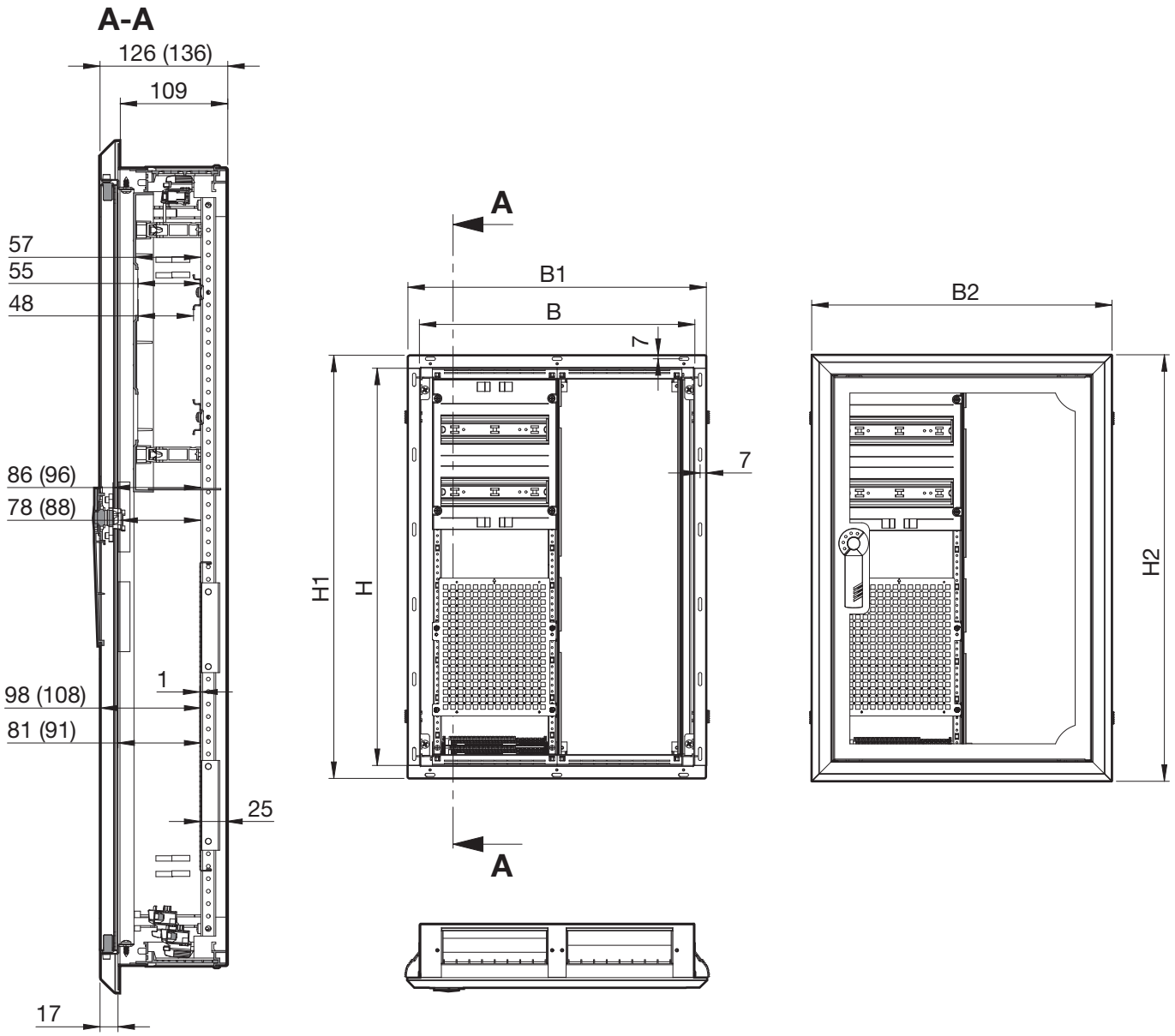

Baubreite *overall width*	**Bauhöhe** *overall height*	**B**	**H**	**B1**	**H1**	**B2**	**H2**
1	3	300	500	350	548	360	563
2	3	550	500	600	548	610	563
3	3	800	500	850	548	860	563
1	4	300	650	350	698	360	713
2	4	550	650	600	698	610	713
3	4	800	650	850	698	860	713
1	5	300	800	350	848	360	863
2	5	550	800	600	848	610	863
3	5	800	800	850	848	860	863
4	5	1050	800	1050	848	1110	863
1	6	300	950	350	998	360	1013
2	6	550	950	600	998	610	1013
3	6	800	950	850	998	860	1013
4	6	1050	950	1050	998	1110	1013
1	7	300	1100	350	1148	360	1163
2	7	550	1100	600	1148	610	1163
3	7	800	1100	850	1148	860	1163

ABN GmbH, Daimlerstraße 10 - 12, D-74196 Neuenstadt,
Fon: +49 (0) 71 39 / 94 - 0, Fax: +49 (0) 71 39 / 94 - 49, E-Mail: de-abn-zentrale@se.com, www.abn-elektro.de
All Rights Reserved
Printed in Germany (04/21)

UP

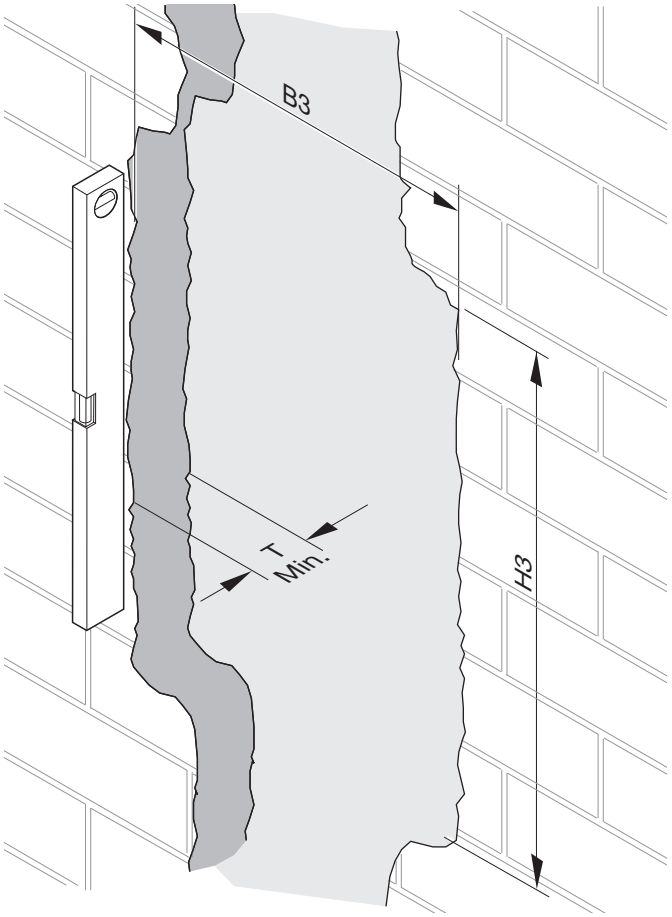

Baubreit *overall width*	**Bauhöhe** *overall height*	**Wandauschnitt** *Wall cut-out* **B3 (B+20)**	**H3 (H+20)**	**T**
1	3	320	520	110
2	3	570	520	110
3	3	820	520	110
1	4	320	670	110
2	4	570	670	110
3	4	820	670	110
1	5	320	820	110
2	5	570	820	110
3	5	820	820	110
4	5	1070	820	110
1	6	320	970	110
2	6	570	970	110
3	6	820	970	110
4	6	1070	970	110
1	7	320	1120	110
2	7	570	1120	110
3	7	820	1120	110

HW

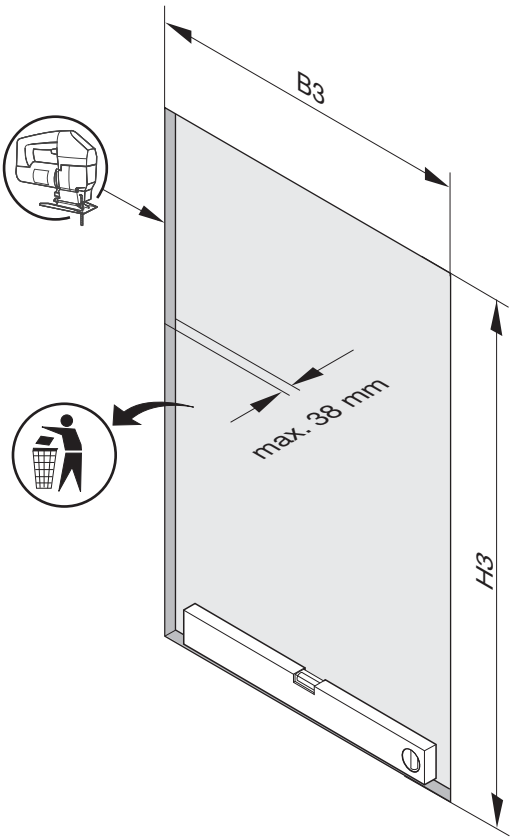

ABN GmbH, Daimlerstraße 10 - 12, D-74196 Neuenstadt,
Fon: +49 (0) 71 39 / 94 - 0, Fax: +49 (0) 71 39 / 94 - 49, E-Mail: de-abn-zentrale@se.com, www.abn-elektro.de

All Rights Reserved
Printed in Germany (04/21) E-MAULX_04

1 UP

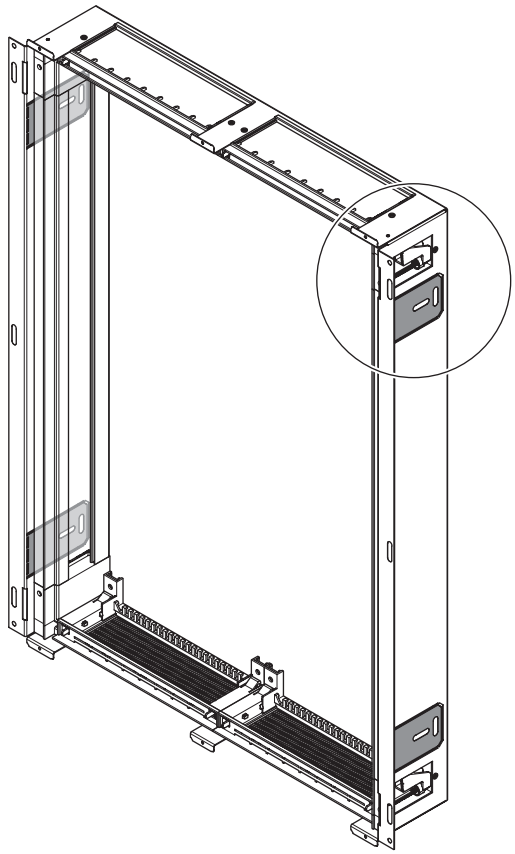

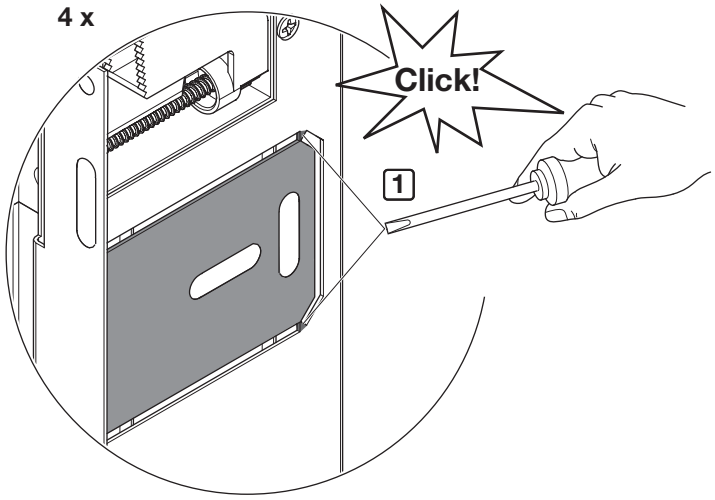

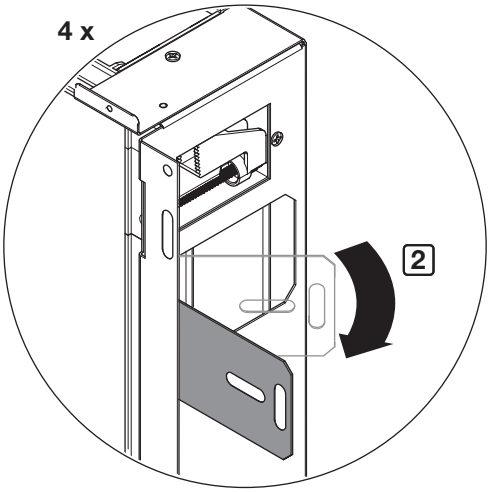

2 UP

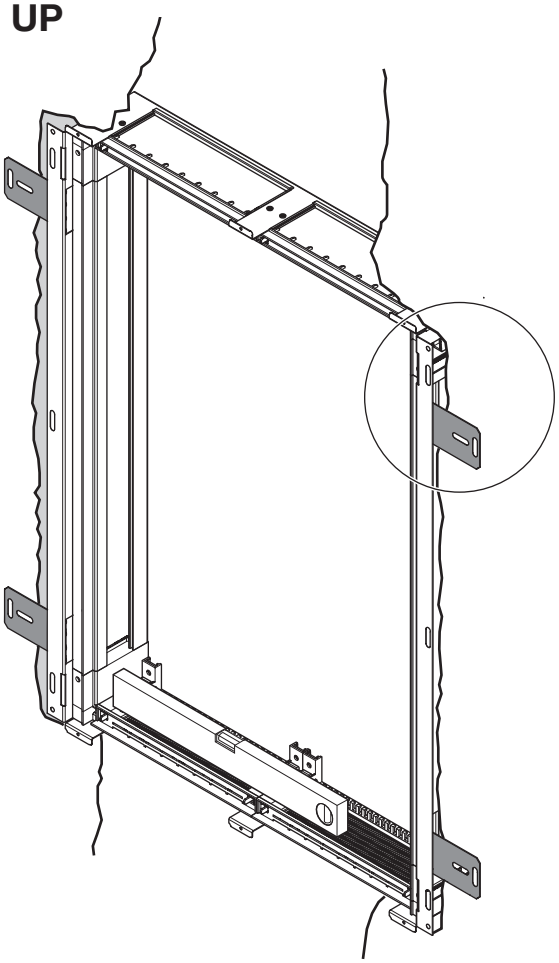

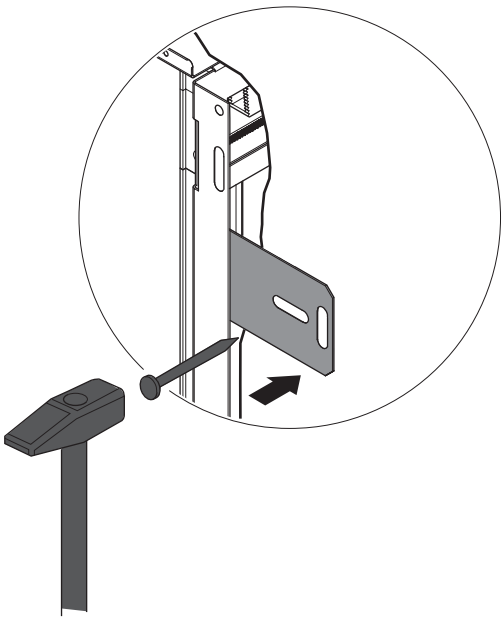

ABN GmbH, Daimlerstraße 10 - 12, D-74196 Neuenstadt,
Fon: +49 (0) 71 39 / 94 - 0, Fax: +49 (0) 71 39 / 94 - 49, E-Mail: de-abn-zentrale@se.com, www.abn-elektro.de

All Rights Reserved
Printed in Germany (04/21) E-MAULX_04

3 HW

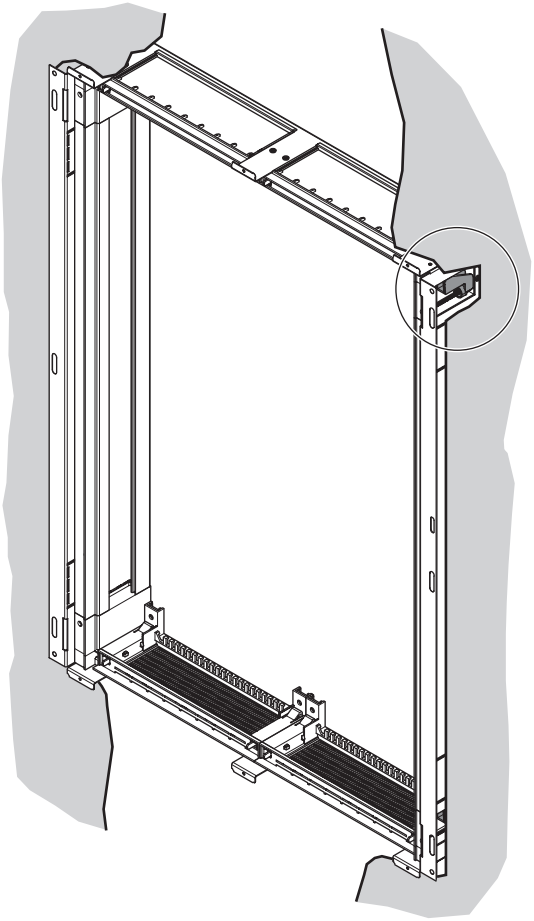

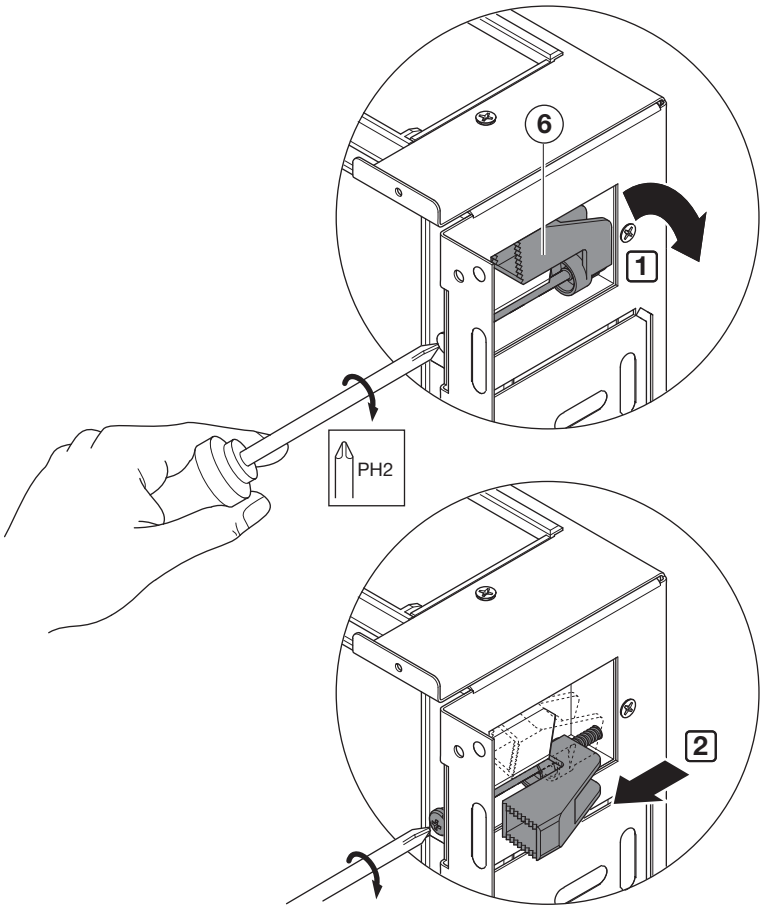

ABN GmbH, Daimlerstraße 10 - 12, D-74196 Neuenstadt,
Fon: +49 (0) 71 39 / 94 - 0, Fax: +49 (0) 71 39 / 94 - 49, E-Mail: de-abn-zentrale@se.com, www.abn-elektro.de

All Rights Reserved
Printed in Germany (04/21) E-MAULX_04

1 UP/HW

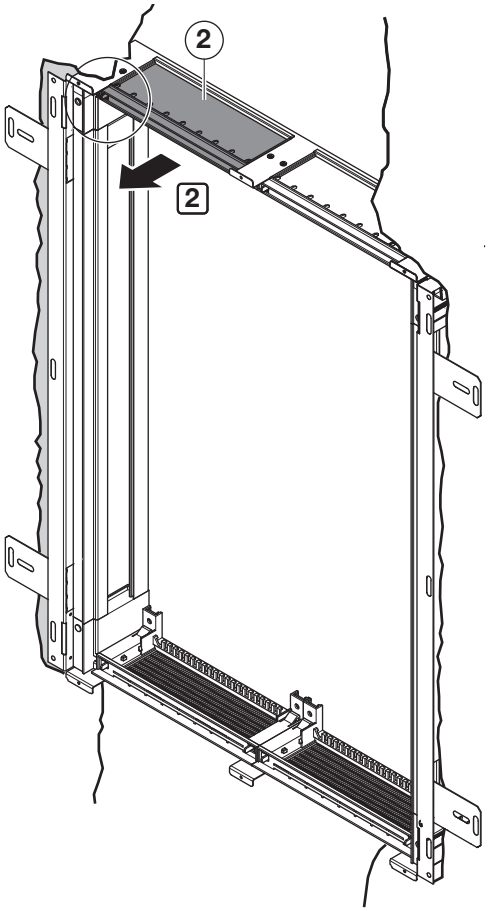

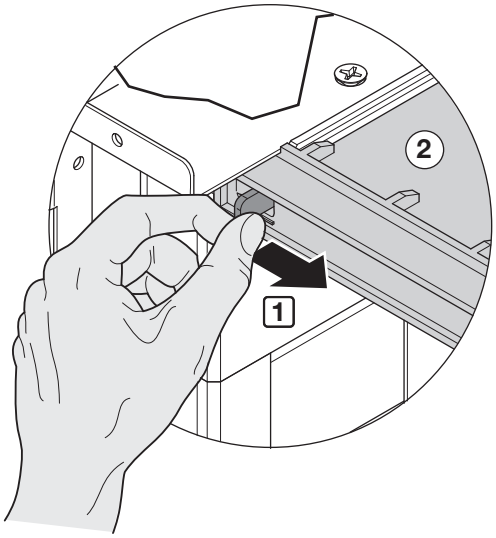

2 UP/HW

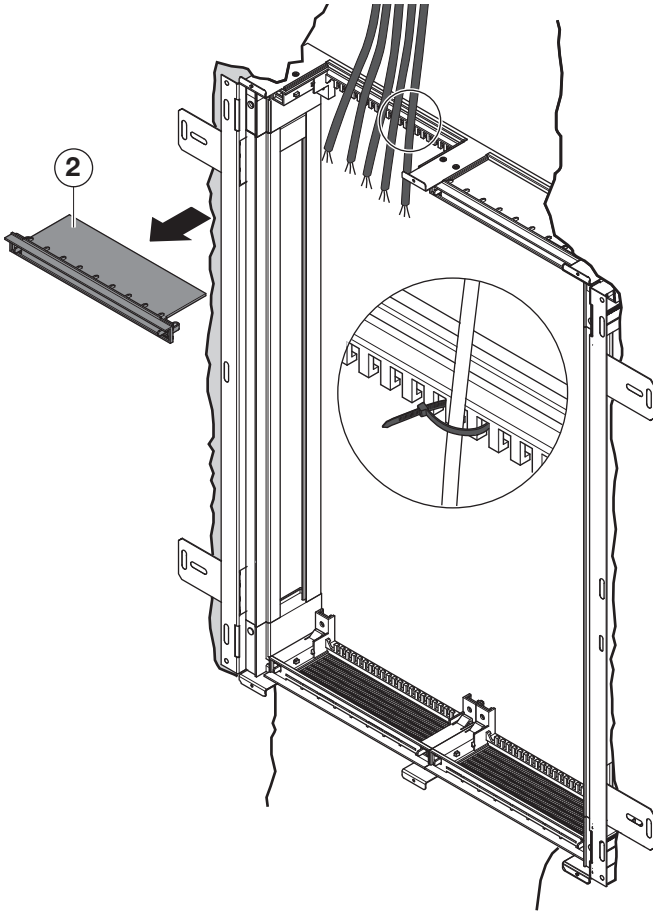

ABN GmbH, Daimlerstraße 10 - 12, D-74196 Neuenstadt,
Fon: +49 (0) 71 39 / 94 - 0, Fax: +49 (0) 71 39 / 94 - 49, E-Mail: de-abn-zentrale@se.com, www.abn-elektro.de

All Rights Reserved
Printed in Germany (04/21) E-MAULX_04

3 UP/HW

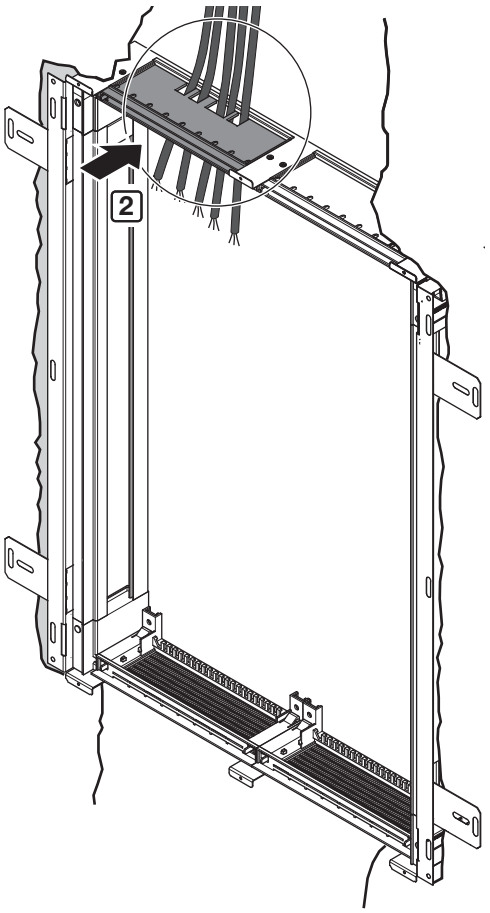

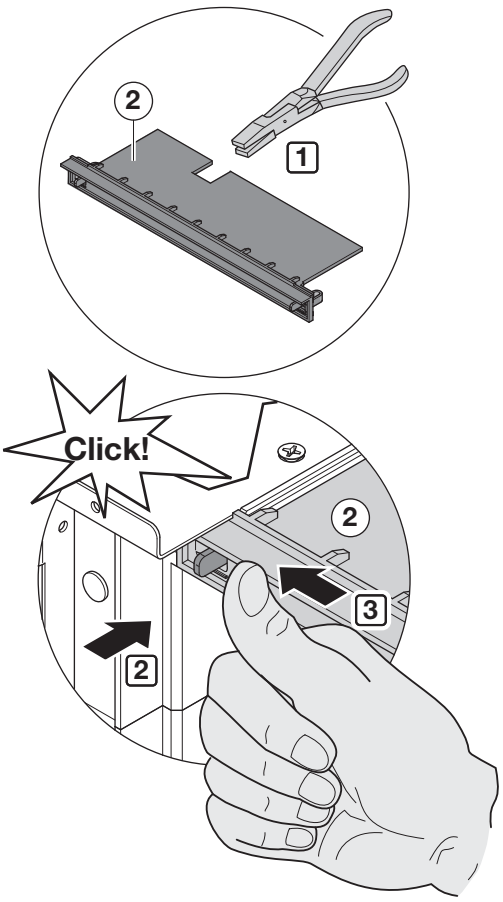

4 UP/HW

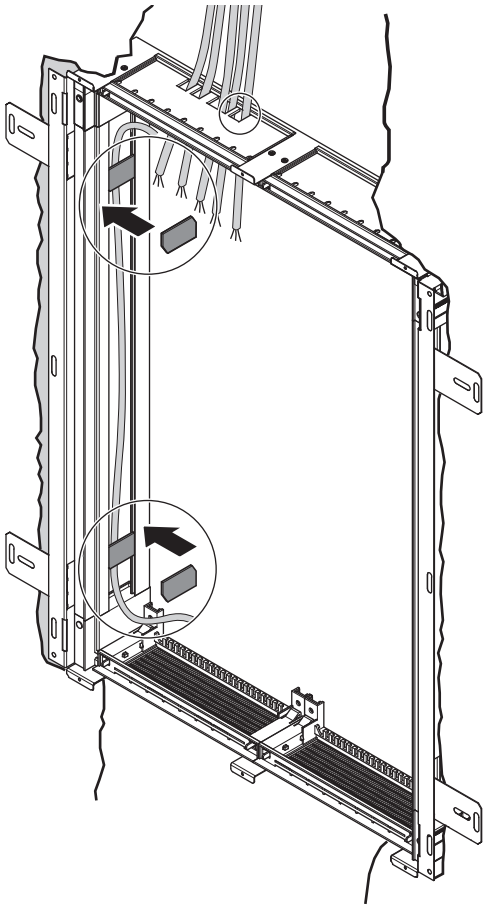

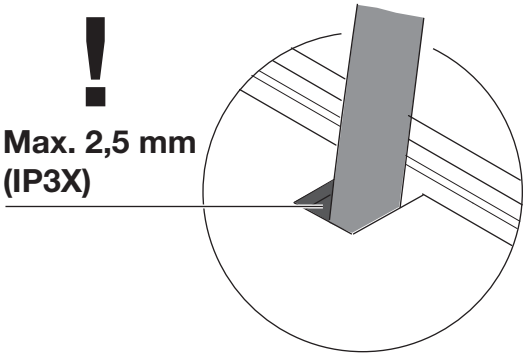

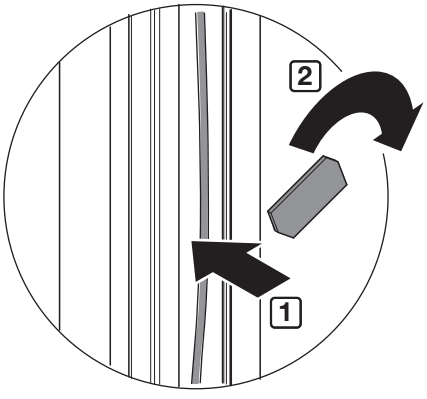

ABN GmbH, Daimlerstraße 10 - 12, D-74196 Neuenstadt,
Fon: +49 (0) 71 39 / 94 - 0, Fax: +49 (0) 71 39 / 94 - 49, E-Mail: de-abn-zentrale@se.com, www.abn-elektro.de

All Rights Reserved
Printed in Germany (04/21) E-MAULX_04

5 UP/HW

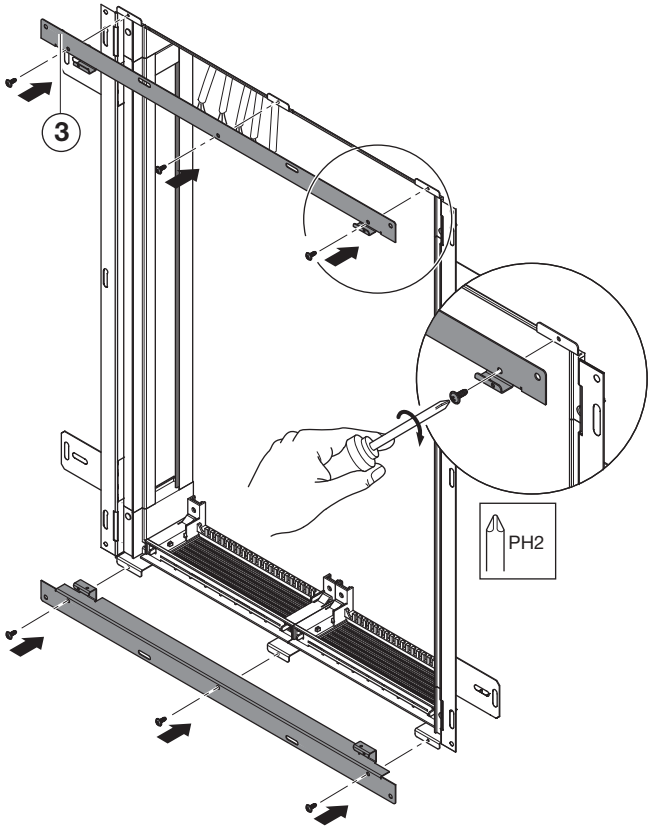

6 UP

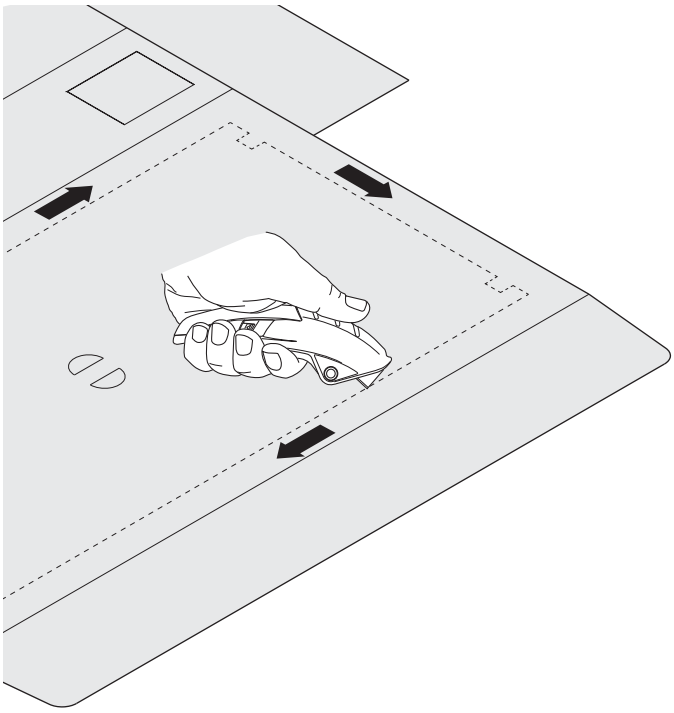

7 UP

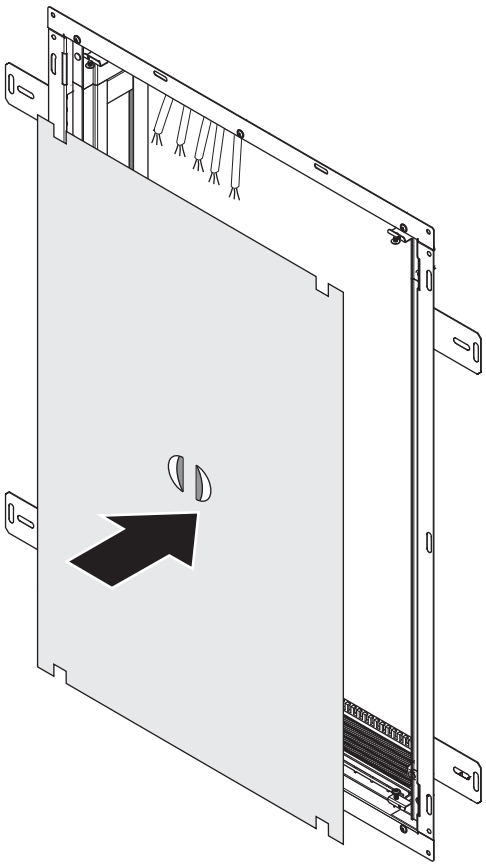

ABN GmbH, Daimlerstraße 10 - 12, D-74196 Neuenstadt,
Fon: +49 (0) 71 39 / 94 - 0, Fax: +49 (0) 71 39 / 94 - 49, E-Mail: de-abn-zentrale@se.com, www.abn-elektro.de

All Rights Reserved
Printed in Germany (04/21) E-MAULX_04

1 UP/HW

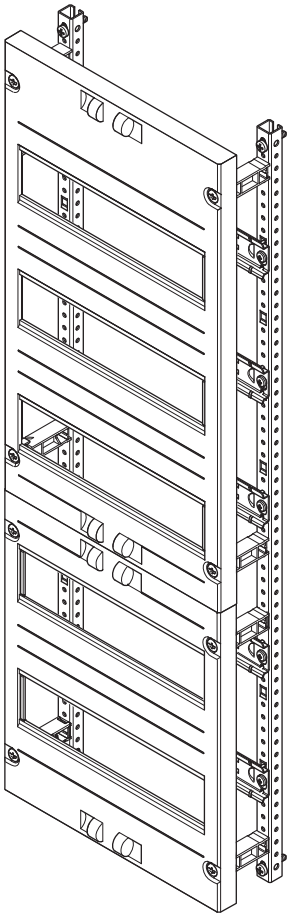

2 UP/HW

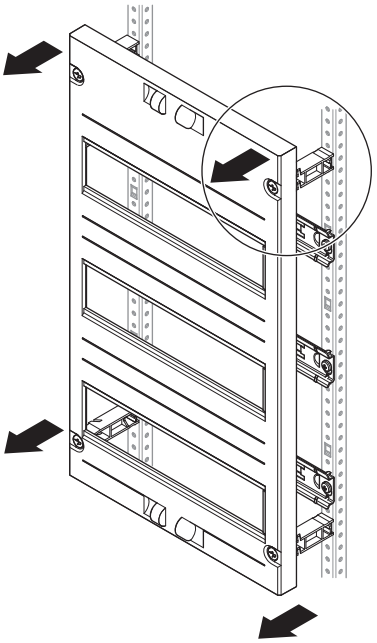

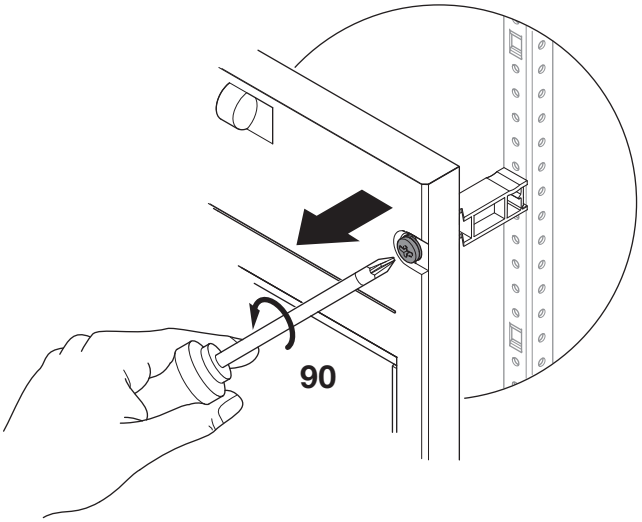

ABN GmbH, Daimlerstraße 10 - 12, D-74196 Neuenstadt,
Fon: +49 (0) 71 39 / 94 - 0, Fax: +49 (0) 71 39 / 94 - 49, E-Mail: de-abn-zentrale@se.com, www.abn-elektro.de

All Rights Reserved
Printed in Germany (04/21) E-MAULX_04

3 UP/HW

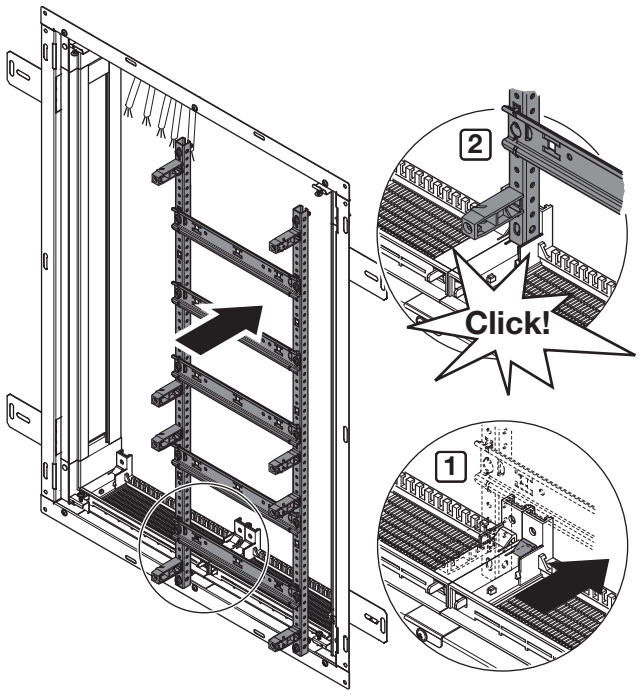

4 UP/HW

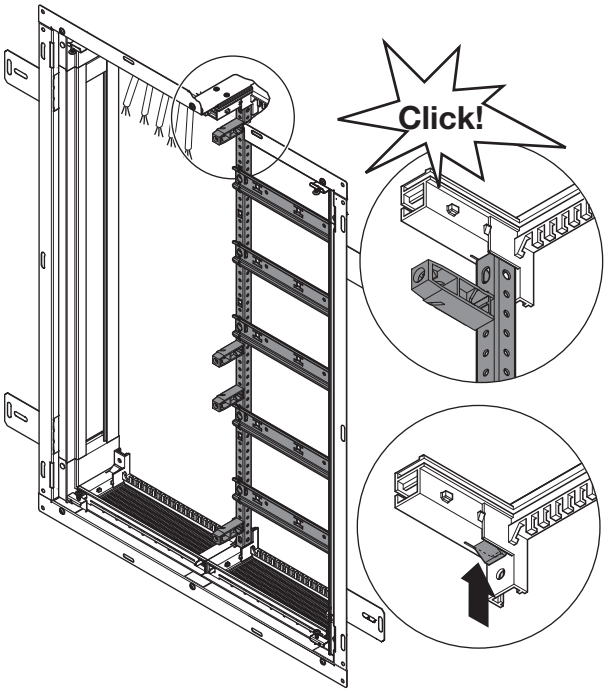

5 UP/HW

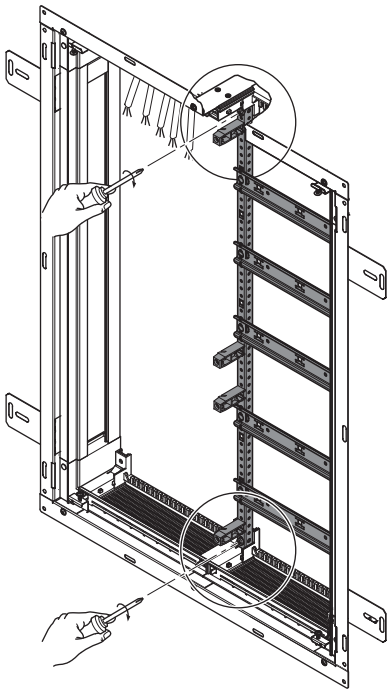

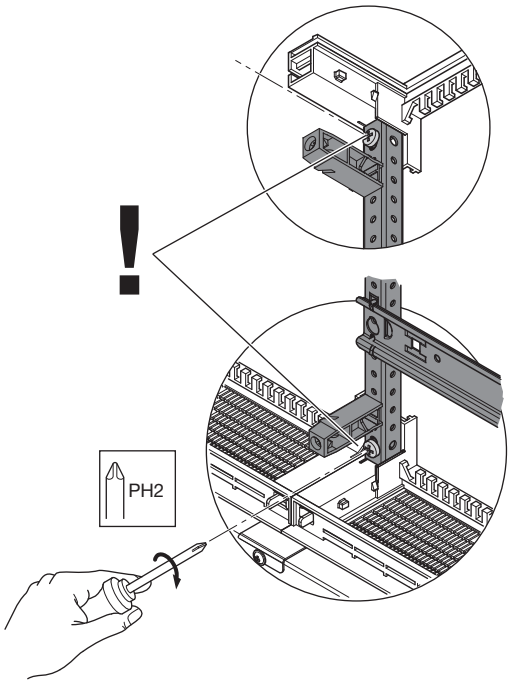

ABN GmbH, Daimlerstraße 10 - 12, D-74196 Neuenstadt,
Fon: +49 (0) 71 39 / 94 - 0, Fax: +49 (0) 71 39 / 94 - 49, E-Mail: de-abn-zentrale@se.com, www.abn-elektro.de

All Rights Reserved
Printed in Germany (04/21) E-MAULX_04

6 UP/HW

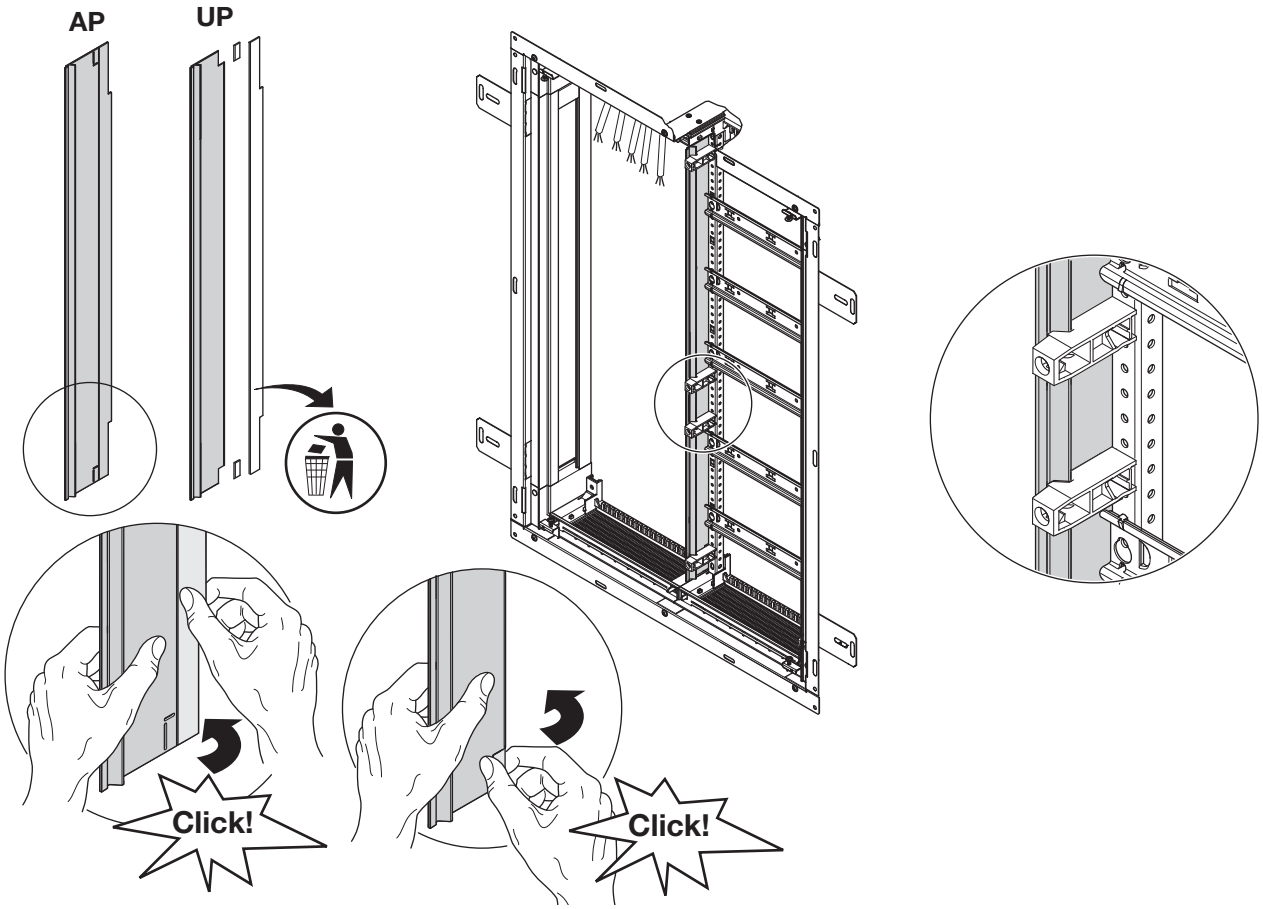

7 UP/HW

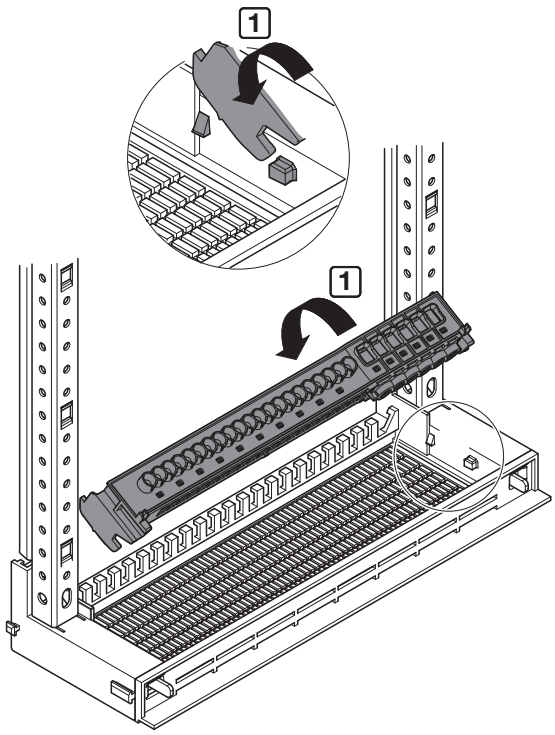

8 UP/HW

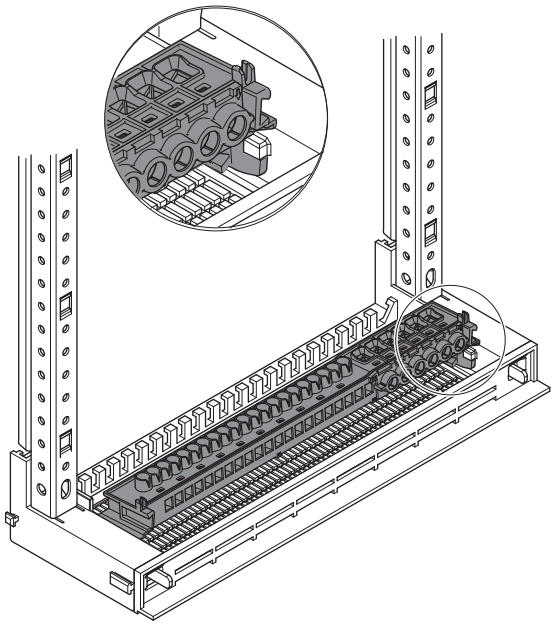

ABN GmbH, Daimlerstraße 10 - 12, D-74196 Neuenstadt,
Fon: +49 (0) 71 39 / 94 - 0, Fax: +49 (0) 71 39 / 94 - 49, E-Mail: de-abn-zentrale@se.com, www.abn-elektro.de

All Rights Reserved

Printed in Germany (04/21) E-MAULX_04

9 UP/HW

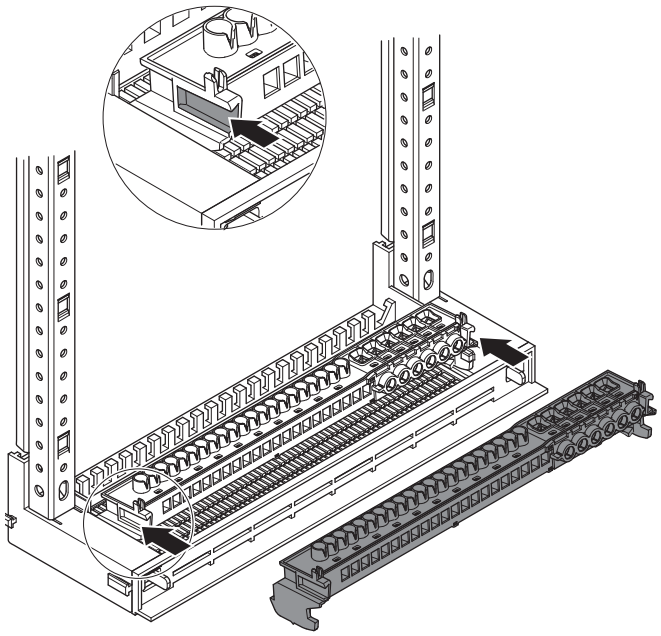

10 UP/HW

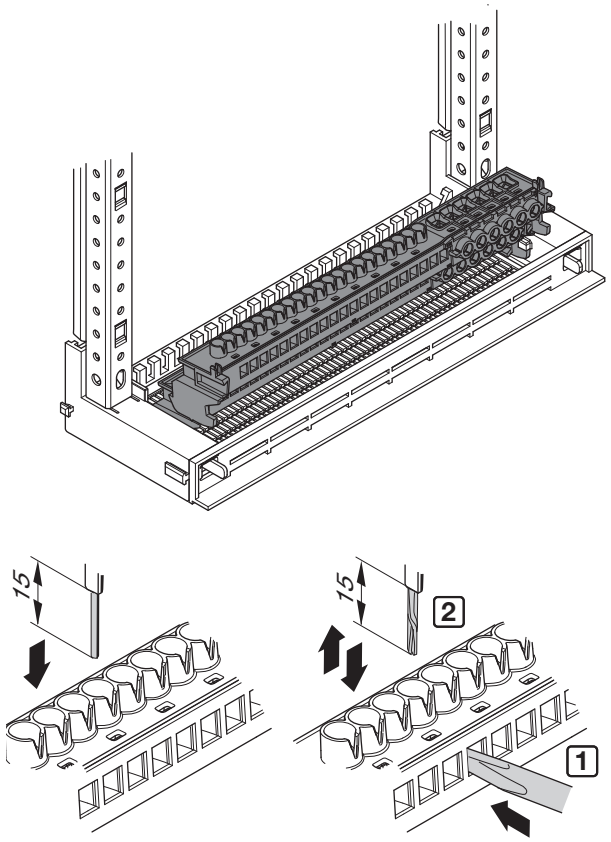

11 UP/HW

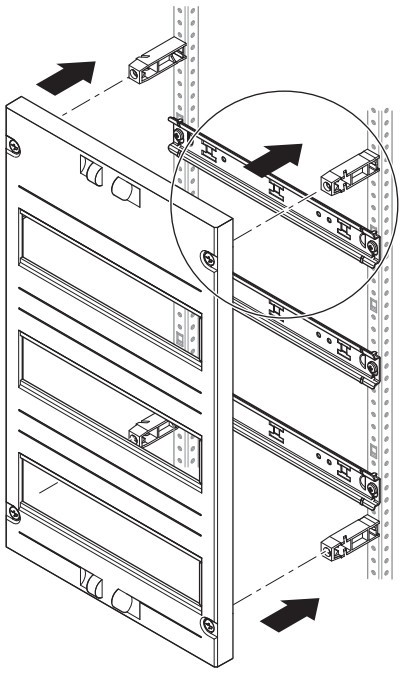

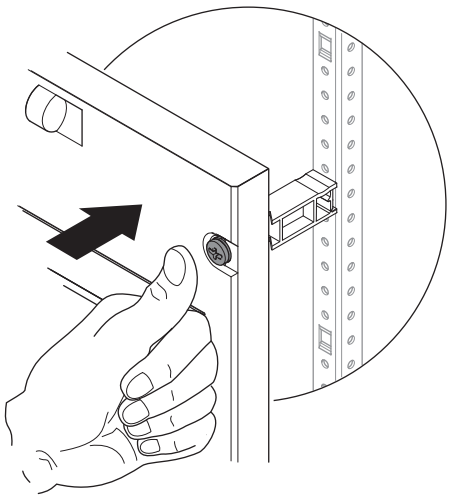

ABN GmbH, Daimlerstraße 10 - 12, D-74196 Neuenstadt,
Fon: +49 (0) 71 39 / 94 - 0, Fax: +49 (0) 71 39 / 94 - 49, E-Mail: de-abn-zentrale@se.com, www.abn-elektro.de

All Rights Reserved
Printed in Germany (04/21) E-MAULX_04

1 UP/HW

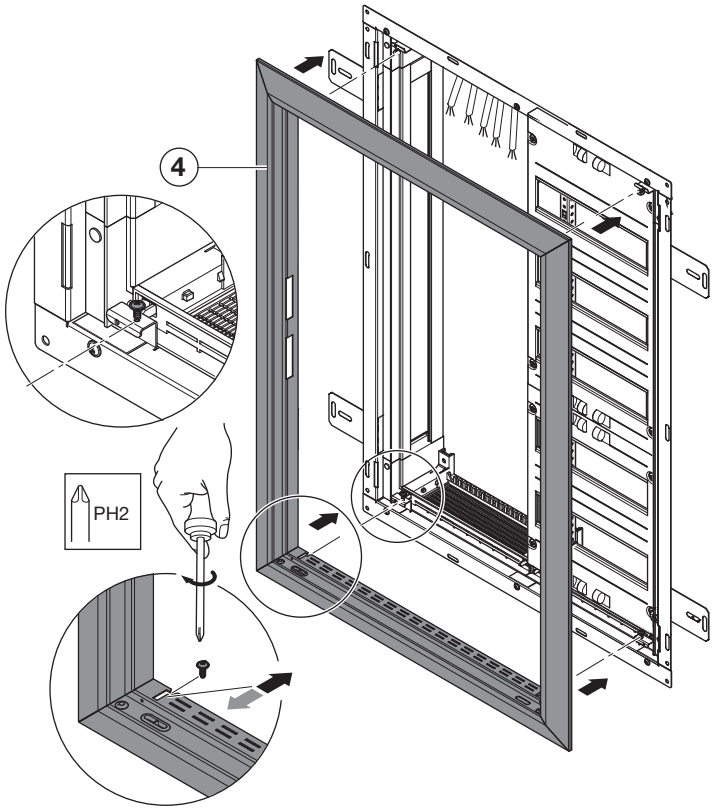

2 HW/UP

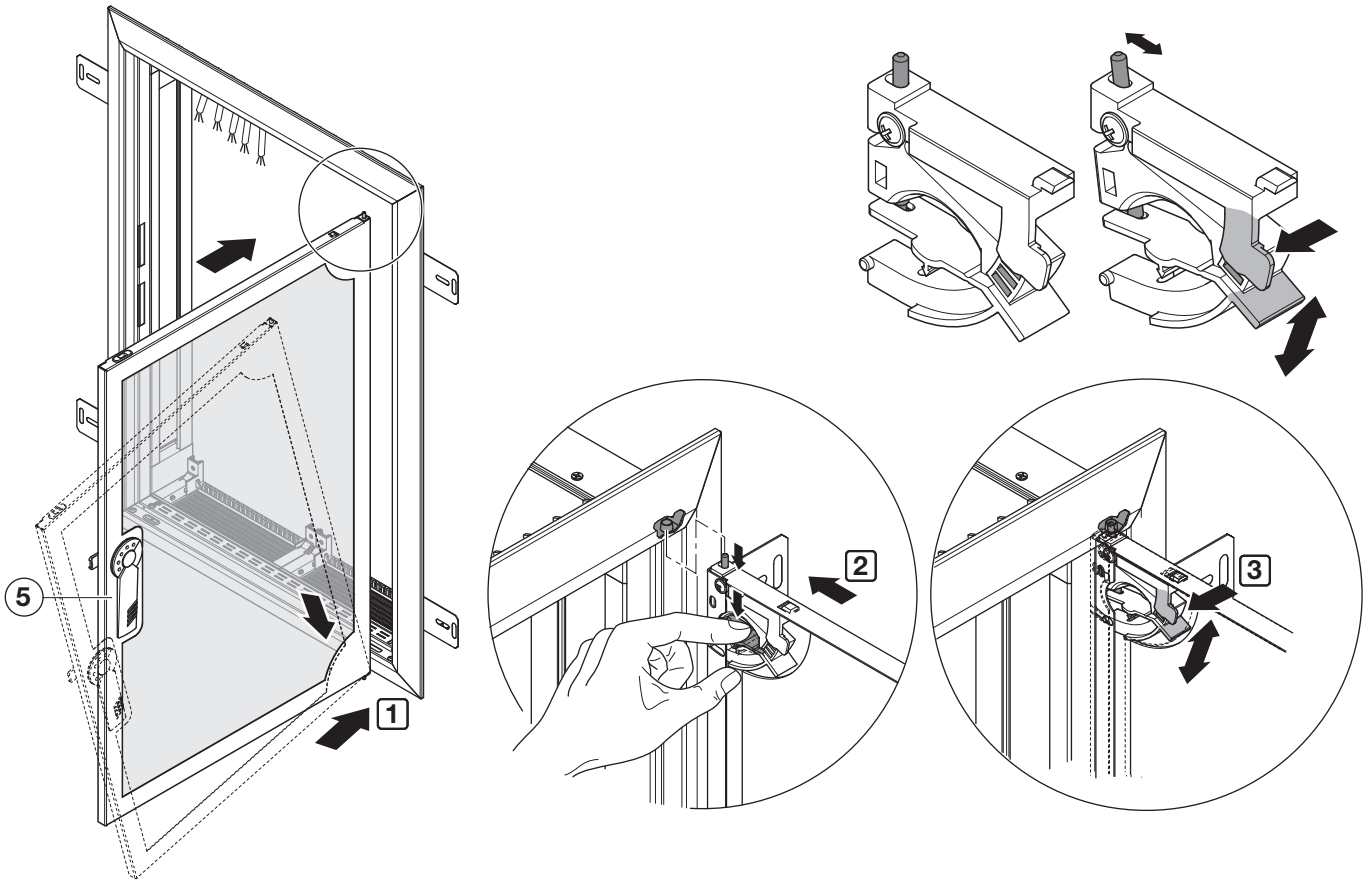

ABN GmbH, Daimlerstraße 10 - 12, D-74196 Neuenstadt,
Fon: +49 (0) 71 39 / 94 - 0, Fax: +49 (0) 71 39 / 94 - 49, E-Mail: de-abn-zentrale@se.com, www.abn-elektro.de

All Rights Reserved

Printed in Germany (04/21) E-MAULX_04

3 UP/HW

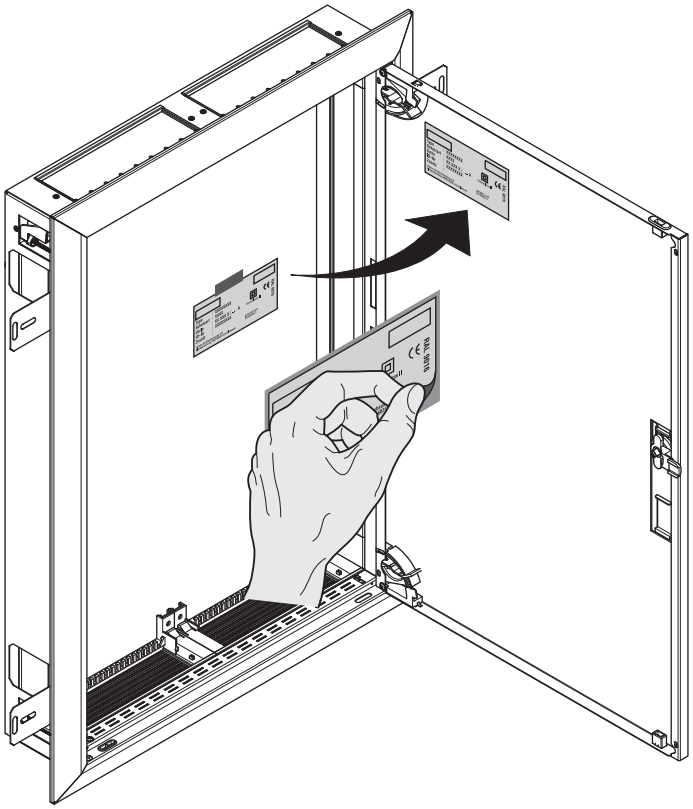

Zubehör
Accessories

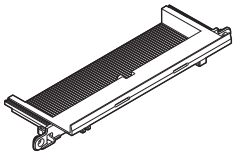

ULP1

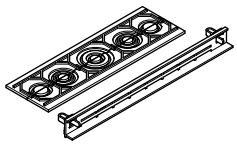

ULP3

ULP5

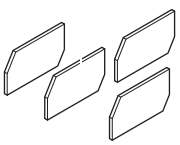

ULKKHN4

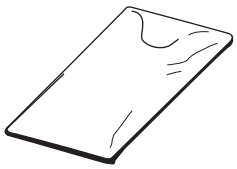

GPT4

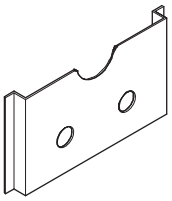

FBS5

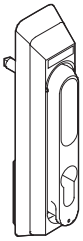

GDV120

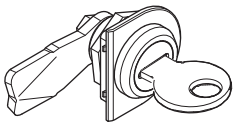

GDV103

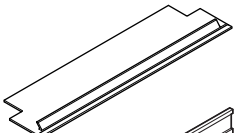

GTWM1

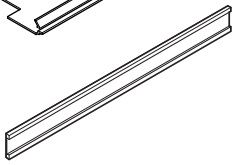

FBS1N9

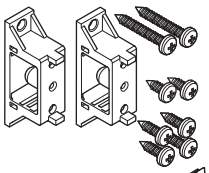

FIP1N2

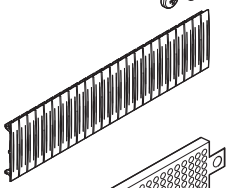

GBS24N10

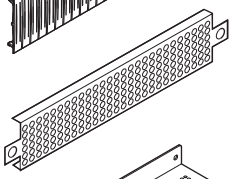

FMSK50N

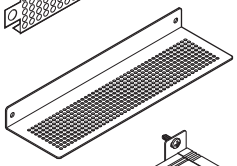

FMSK50B

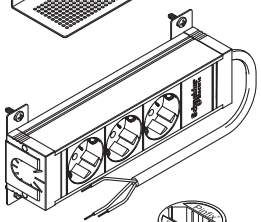

XSD3L

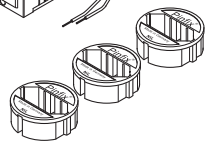

BPSD3

ABN GmbH, Daimlerstraße 10 - 12, D-74196 Neuenstadt,
Fon: +49 (0) 71 39 / 94 - 0, Fax: +49 (0) 71 39 / 94 - 49, E-Mail: de-abn-zentrale@se.com, www.abn-elektro.de

All Rights Reserved
Printed in Germany (04/21) E-MAULX_04

Zubehör
Accessories

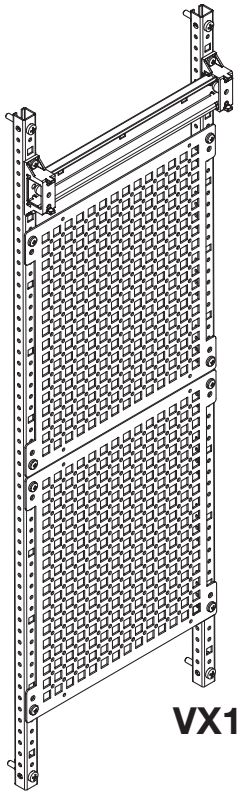

VX15RM7141

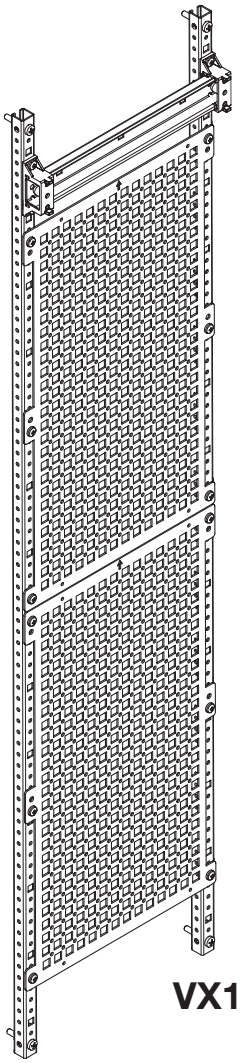

VX17RM7160

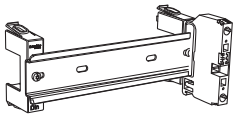

VDIR380001

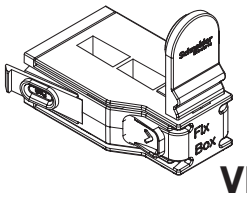

VDIR380002

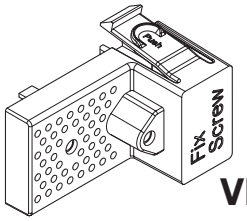

VDIR380003

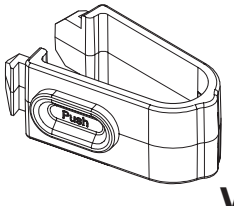

VDIR380004

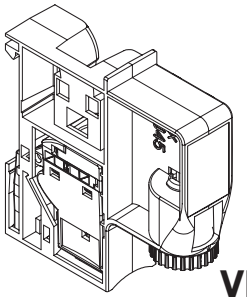

VDIR380005

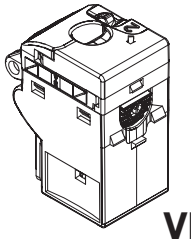

VDIB1772XB01

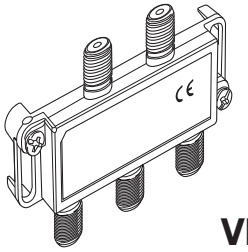

VDIR327004

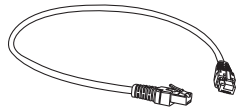

VDIR547402

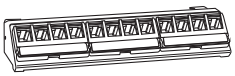

VDIR612021

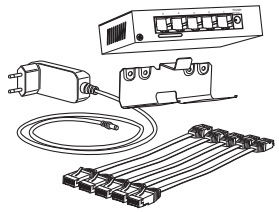

VDIR323005

ABN GmbH, Daimlerstraße 10 - 12, D-74196 Neuenstadt,
Fon: +49 (0) 71 39 / 94 - 0, Fax: +49 (0) 71 39 / 94 - 49, E-Mail: de-abn-zentrale@se.com, www.abn-elektro.de

All Rights Reserved
Printed in Germany (04/21) E-MAULX_04