OPEN
Industry Standard, Flexible Architecture

GREEN
Less Heat, Less Power Consumption

STABLE
Robust Design, Quality Parts

Stable and
Reliable Solution

Server/Workstation
Motherboard

X470D4U2-2T

User Manual

English

Version 1.0
Published January 2019

Copyright Notice:

Disclaimer:

Specifications and information contained in this documentation are furnished for informational use only and subject to change without notice, and should not be constructed as a commitment by ASRock Rack. ASRock Rack assumes no responsibility for any errors or omissions that may appear in this documentation.

With respect to the contents of this documentation, ASRock Rack does not provide warranty of any kind, either expressed or implied, including but not limited to the implied warranties or conditions of merchantability or fitness for a particular purpose.

In no event shall ASRock Rack, its directors, officers, employees, or agents be liable for any indirect, special, incidental, or consequential damages (including damages for loss of profits, loss of business, loss of data, interruption of business and the like), even if ASRock Rack has been advised of the possibility of such damages arising from any defect or error in the documentation or product.

This device complies with Part 15 of the FCC Rules. Operation is subject to the following two conditions:
(1) this device may not cause harmful interference, and
(2) this device must accept any interference received, including interference that may cause undesired operation.

CALIFORNIA, USA ONLY

The Lithium battery adopted on this motherboard contains Perchlorate, a toxic substance controlled in Perchlorate Best Management Practices (BMP) regulations passed by the California Legislature. When you discard the Lithium battery in California, USA, please follow the related regulations in advance.
"Perchlorate Material-special handling may apply, see www.dtsc.ca.gov/hazardouswaste/perchlorate"

ASRock Rack's Website: www.ASRockRack.com

Contact Information

If you need to contact ASRock Rack or want to know more about ASRock Rack, you're welcome to visit ASRock Rack's website at www.ASRockRack.com; or you may contact your dealer for further information.

ASRock Rack Incorporation

6F., No.37, Sec. 2, Jhongyang S. Rd., Beitou District,

Taipei City 112, Taiwan (R.O.C.)

Contents

Chapter 1 Introduction

Thank you for purchasing ASRock Rack ***X470D4U2-2T*** motherboard, a reliable motherboard produced under ASRock Rack's consistently stringent quality control. It delivers excellent performance with robust design conforming to ASRock Rack's commitment to quality and endurance.

In this manual, chapter 1 and 2 contains introduction of the motherboard and step-by-step guide to the hardware installation. Chapter 3 and 4 contains the configuration guide to BIOS setup and information of the Support CD.

Because the motherboard specifications and the BIOS software might be updated, the content of this manual will be subject to change without notice. In case any modifications of this manual occur, the updated version will be available on ASRock Rack website without further notice. You may find the latest memory and CPU support lists on ASRock Rack website as well. ASRock Rack's Website: www.ASRockRack.com

If you require technical support related to this motherboard, please visit our website for specific information about the model you are using.
http://www.asrockrack.com/support/

1.1 Package Contents

- ASRock Rack X470D4U2-2T Motherboard
  (micro-ATX Form Factor: 9.6-in x 9.6-in, 24.4 cm x 24.4 cm)
- Quick Installation Guide
- 1 x I/O Shield
- 1 x SATA3 Cable (60cm)
- 2 x Screws for M.2 Sockets

If any items are missing or appear damaged, contact your authorized dealer.

English

1.2 Specifications

X470D4U2-2T	
MB Physical Status	
Form Factor	micro-ATX
Dimension	9.6" x 9.6" (24.4 cm x 24.4 cm)
Processor System	
CPU	AMD AM4 Socket Ryzen Series CPUs (Raven Ridge and Pinnacle Ridge) and Ryzen 7nm CPUs
Socket	AM4 PGA 1331
Chipset	AMD X470
System Memory	
Capacity	- 4 x 288-pin DDR4 DIMM slots - Support up to 64GB DDR4 ECC/UDIMM - One DIMM: 1R DIMM @2667MT/s; 2R/2DR DIMM @2400MT/s - Two DIMMs: (2) 1R DIMM @2133 MT/s; (2) 2R/2DR DIMM @1866MT/s; 1R and 2R/2DR DIMM each @1866MT/s
Type	- Dual Channel DDR4 memory technology - Support DDR4 ECC/UDIMM
DIMM Size Per DIMM	- ECC/UDIMM: 64GB, 32GB, 16GB, 8GB
DIMM Frequency	- ECC/UDIMM: 2666/2400/2133 MHz
Voltage	1.2V
Expansion Slot	
PCIe 3.0 x 16	PCIE6: Gen3 x16 link (splittable in x4/4/4/4); auto switch to x8 link when PCIE4 is occupied. PCIE4: Gen3 x8 link
PCIe 2.0 x 1	PCIE5: Gen2 x1 link
Storage	
SATA Controller	6 x SATA3 6.0 Gb/s (1x SATA DOM port), support RAID 0, 1, 10
M.2 Slot	2 (2242/2260/2280/22110, supports SATA3 and PCIe 3.0 x2 or supports PCIe 2.0 x4 only)
Ethernet	
Interface	10000/1000 /100 /10 Mbps
LAN Controller	- 2 x RJ45 10G base-T by Intel® X550-AT2 - 1 x RJ45 Dedicated IPMI LAN port by RTL8211E - Supports Wake-On-LAN - Supports Energy Efficient Ethernet 802.3az - Supports Dual LAN with Teaming function - Supports PXE - LAN3 supports NCSI

Management	
BMC Controller	ASPEED AST2500
IPMI Dedicated GLAN	1 x Realtek RTL8211E for dedicated management GLAN
Features	Watch Dog
Graphics	
Controller	ASPEED AST2500
VRAM	DDR4 256MB
Rear Panel I/O	
VGA Port	1 x D-Sub
Serial Port	1 x COM port
USB 3.1 (Gen1) Port	2
LAN Port	- 2 x RJ45 10 Gigabit Ethernet LAN ports - 1 x RJ45 Dedicated IPMI LAN port - LAN Ports with LED (ACT/LINK LED and SPEED LED)
UID	1
Internal Connector	
Auxiliary Panel Header	1 (includes chassis intrusion, location button & LED, front LAN LED, system fault, and BMC alert)
TPM Header	1
IPMB Header	1
Fan Header	6 Fans x 4-pin (FAN1(CPU)/FAN2~FAN6(5Front))
ATX Power	1 x (24-pin) + 1 x (8-pin)
USB 3.1 Gen1 Header	1 (supports 2 USB 3.1 Gen1 ports)
M.2	2(M2_1: 2242/2260/2280/22110, PCIE(X4); M2_2:2242/2260/2280/22110, SATA/PCIE(X2))
SATA DOM	1
BMC_SMB1	1
PSU_SMB1	1
80 debug port LED	1
Buzzer	1
Clear CMOS	1 (short pad)
OH/FanFail LED	6 (only Fan Fail LED)
Front Panel	1 (RST, PWRBTN, HDDLED, PWRLED)
System BIOS	
BIOS Type	16MB AMI UEFI Legal BIOS
BIOS Features	- Plug and Play (PnP) - ACPI 2.0 Compliance Wake Up Events - SMBIOS 2.8 Support - ASRock Rack Instant Flash

Hardware Monitor	
Temperature	- CPU/DDR/LAN Temperature Sensing - MB/Card Side Temperature Sensing
Fan	- Fan Tachometer - Quiet Fan (Allow Chassis Fan Speed Auto-Adjust by CPU Temperature) - Fan Multi-Speed Control
Voltage	Voltage Monitoring: +12V, +5V, +3.3V, CPU Vcore, DRAM, 1.05V_PCH, +BAT, 3VSB, 5VSB
Support OS	
OS	Microsoft® Windows®: Windows 10 (64 bit) Linux®: - UBuntu 16.04.4 (64 bit) - RedHat Enterprise Linux Server 7.3 (64bit) / 7.4 (64bit) ** Please refer to our website for the latest OS support list.* ** The Linux system doesn't support Raid mode.* ** Supports UEFI BOOT only.*
Environment	
Temperature	Operation temperature: 10°C ~ 35°C / Non operation temperature: -40°C ~ 70°C

NOTE: Please refer to our website for the latest specifications.

This motherboard supports Wake from on Board LAN. To use this function, please make sure that the "Wake on Magic Packet from power off state" is enabled in Device Manager > Intel® Ethernet Connection > Power Management. And the "PCI Devices Power On" is enabled in UEFI SETUP UTILITY > Advanced > ACPI Configuration. After that, onboard LAN3&4 can wake up S5 under OS.

If you install Intel® LAN utility or Marvell SATA utility, this motherboard may fail Windows® Hardware Quality Lab (WHQL) certification tests. If you install the drivers only, it will pass the WHQL tests.

1.3 Unique Features

ASRock Rack Instant Flash is a BIOS flash utility embedded in Flash ROM. This convenient BIOS update tool allows you to update system BIOS without entering operating systems first like MS-DOS or Windows®. With this utility, you can press the <F6> key during the POST or the <F2> key to enter into the BIOS setup menu to access ASRock Rack Instant Flash. Just launch this tool and save the new BIOS file to your USB flash drive, floppy disk or hard drive, then you can update your BIOS only in a few clicks without preparing an additional floppy diskette or other complicated flash utility. Please be noted that the USB flash drive or hard drive must use FAT32/16/12 file system.

1.4 Motherboard Layout

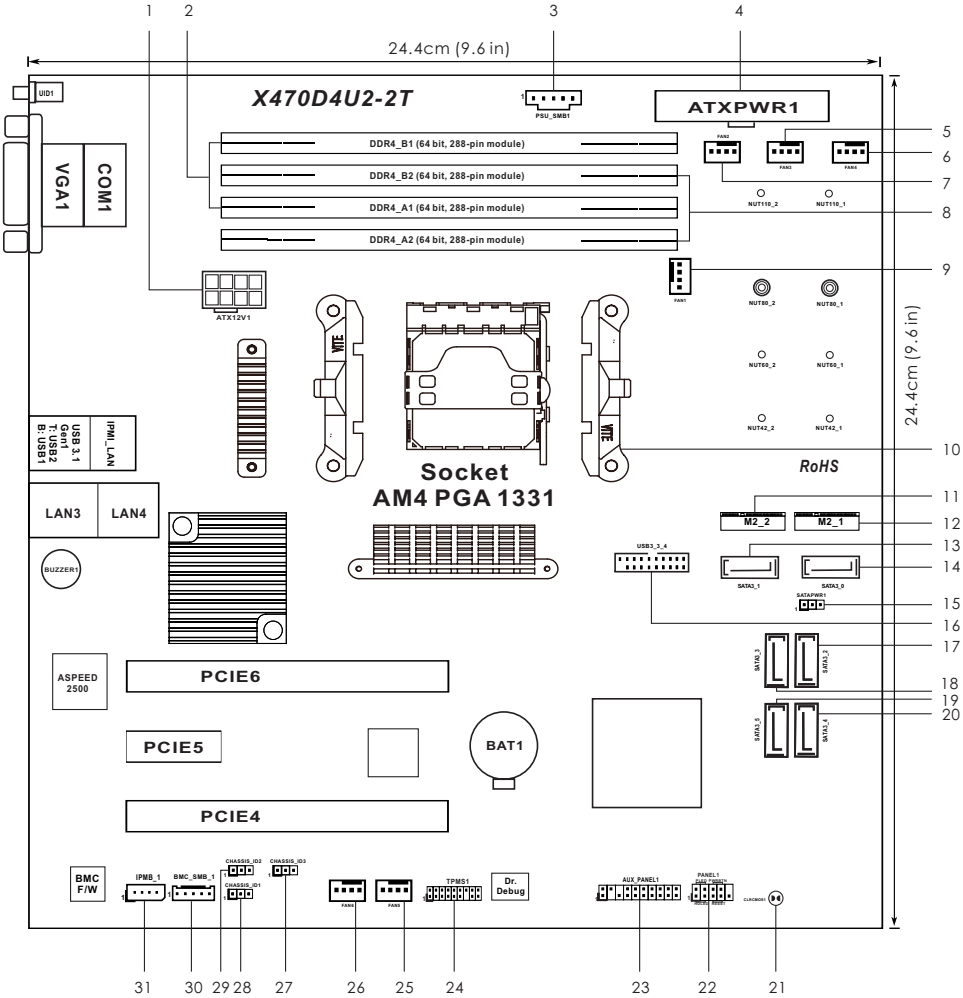

English

No.	Description
1	ATX 12V Power Connector (ATX12V1)
2	2 x 288-pin DDR4 DIMM Slots (DDR4_A1, DDR4_B1, Blue)*
3	PSU SMBus Header (PSU_SMB1)
4	ATX Power Connector (ATXPWR1)
5	Front Fan Connector (FAN3)
6	Front Fan Connector (FAN4)
7	Front Fan Connector (FAN2)
8	2 x 288-pin DDR4 DIMM Slots (DDR4_A2, DDR4_B2, White)*
9	CPU Fan Connector (FAN1)
10	AM4 PGA 1331 Socket
11	M.2 Socket (M2_2) (Type 2242 / 2260 / 2280 / 22110)
12	M.2 Socket (M2_1) (Type 2242 / 2260 / 2280 / 22110)
13	SATA3 Connector (SATA3_1)
14	SATA3 DOM Connector (SATA3_0), Red
15	SATA DOM Power Jumper (SATAPWR1)
16	USB 3.1 Gen1 Header (USB3_3_4)
17	SATA3 Connector (SATA3_2)
18	SATA3 Connector (SATA3_3)
19	SATA3 Connector (SATA3_5)
20	SATA3 Connector (SATA3_4)
21	Clear CMOS Pad (CLRMOS1)
22	System Panel Header (PANEL1)
23	Auxiliary Panel Header (AUX_PANEL1)
24	TPM Header (TPMS1)
25	Front Fan Connector (FAN5)
26	Front Fan Connector (FAN6)
27	Chassis ID3 Jumper (CHASSIS_ID3)
28	Chassis ID1 Jumper (CHASSIS_ID1)
29	Chassis ID2 Jumper (CHASSIS_ID2)
30	BMC SMBus Header (BMC_SMB_1)
31	Intelligent Platform Management Bus header (IPMB1)

**For DIMM installation and configuration instructions, please see p.19 (Installation of Memory Modules (DIMM)) for more details.*

1.5 Onboard LED Indicators

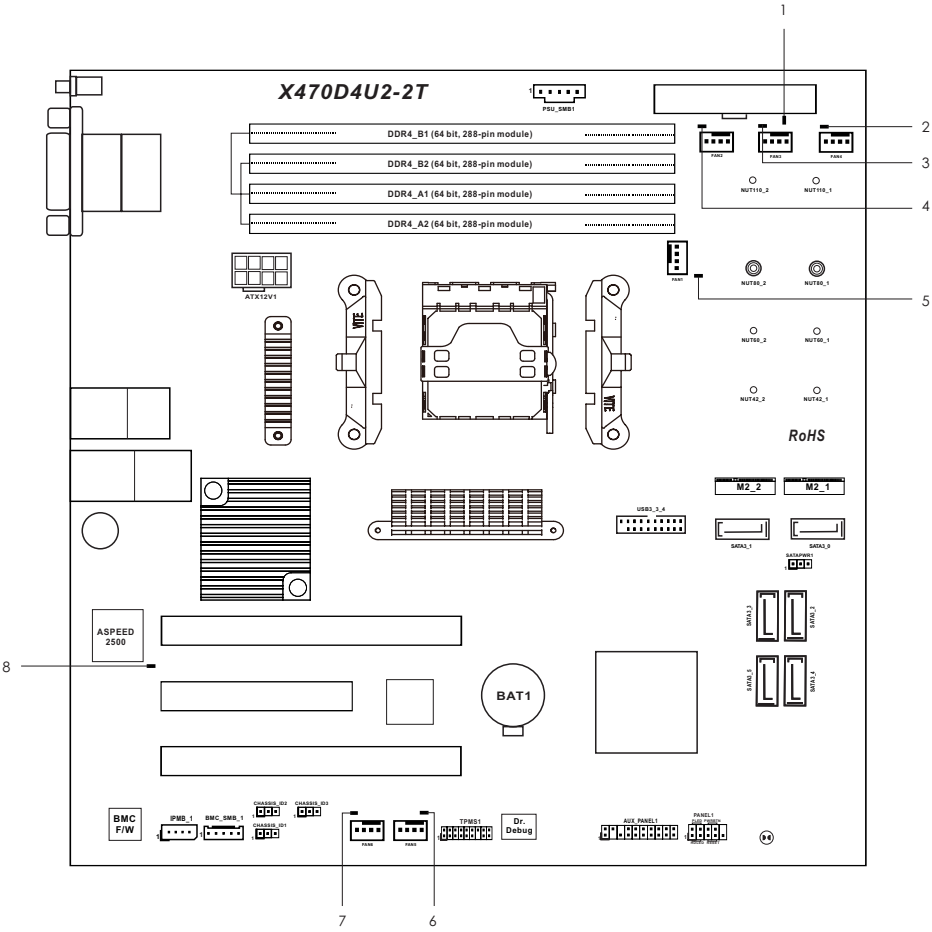

No.	Item	Status	Description
1	SB_PWR1	Green	STB PWR ready
2	FAN_LED4	Amber	FAN4 failed
3	FAN_LED3	Amber	FAN3 failed
4	FAN_LED2	Amber	FAN2 failed
5	FAN_LED1	Amber	FAN1(CPU) failed
6	FAN_LED5	Amber	FAN5 failed
7	FAN_LED6	Amber	FAN6 failed
8	BMC_LED1	Green	BMC heartbeat LED

1.6 I/O Panel

No.	Description	No.	Description
1	UID Switch (UID1)	5	LAN RJ-45 Port (IPMI_LAN1)*
2	VGA Port (VGA1)	6	10G LAN RJ-45 Port (LAN3)**
3	Serial Port (COM1)	7	10G LAN RJ-45 Port (LAN4)**
4	USB 3.1 Gen1 Ports (USB3_1_2)		

*There are two LED next to the LAN port. Please refer to the table below for the LAN port LED indications.

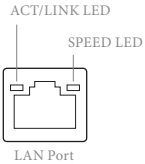

Dedicated IPMI LAN Port LED Indications

Activity / Link LED		Speed LED	
Status	Description	Status	Description
Off	No Link	Off	10M bps connection or no link
Blinking Yellow	Data Activity	Yellow	100M bps connection
On	Link	Green	1Gbps connection

English

**There are two LEDs on each LAN port. Please refer to the table below for the LAN port LED indications.

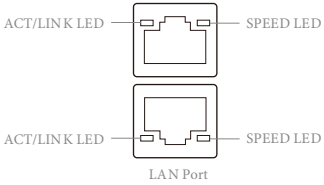

10G LAN Port (LAN3, LAN4) LED Indications

Activity / Link LED		Speed LED	
Status	**Description**	**Status**	**Description**
Off	No Link	Off	10M/100Mbps connection or no link
Blinking Yellow	Data Activity	Orange	1Gbps connection
On	Link	Green	10Gbps connection

1.7 Block Diagram

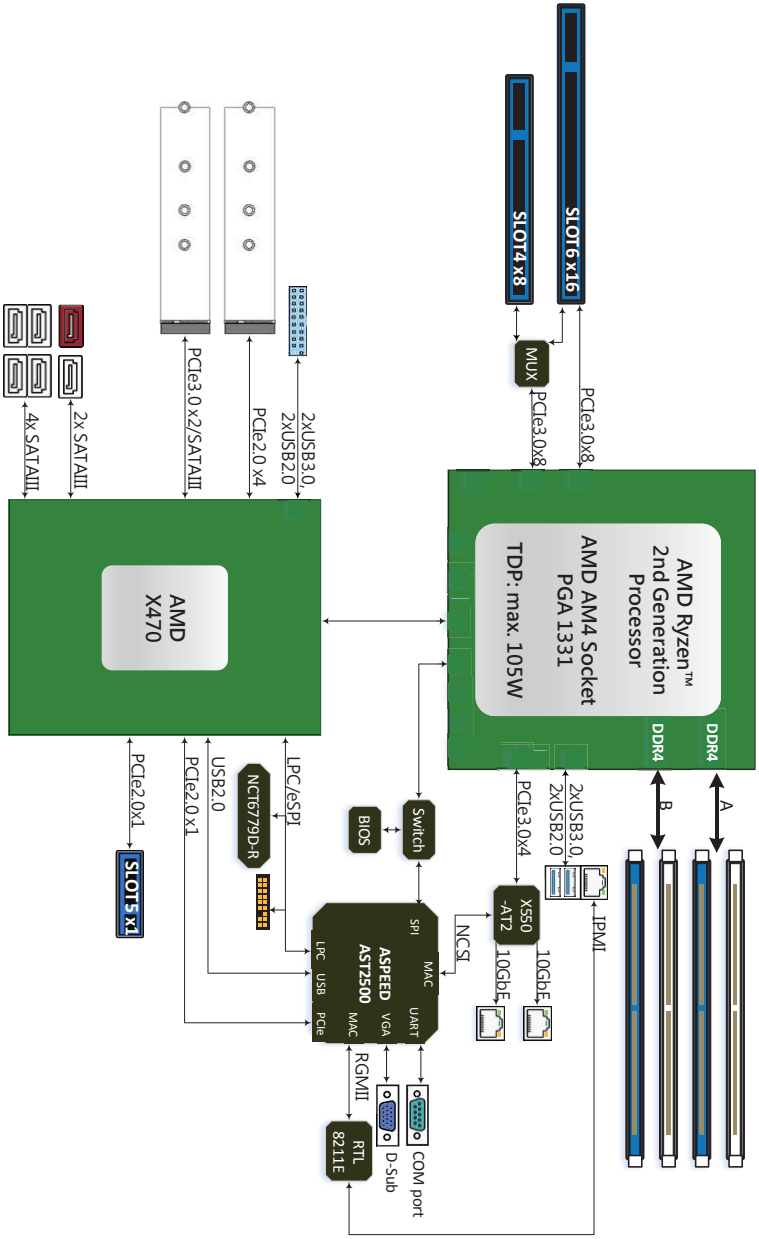

English

Chapter 2 Installation

This is a micro-ATX form factor (9.6” x 9.6”, 24.4 cm x 24.4 cm) motherboard. Before you install the motherboard, study the configuration of your chassis to ensure that the motherboard fits into it.

Make sure to unplug the power cord before installing or removing the motherboard. Failure to do so may cause physical injuries to you and damages to motherboard components.

2.1 Screw Holes

Place screws into the holes indicated by circles to secure the motherboard to the chassis.

Attention! Before installing this motherboard, be sure to unscrew and remove the standoffs at the marked location, under the motherboard, from the chassis, in order to avoid electrical short circuit and damage to your motherboard.

Do not over-tighten the screws! Doing so may damage the motherboard.

2.2 Pre-installation Precautions

Take note of the following precautions before you install motherboard components or change any motherboard settings.

1. Unplug the power cord from the wall socket before touching any components.
2. To avoid damaging the motherboard’s components due to static electricity, NEVER place your motherboard directly on the carpet or the like. Also remember to use a grounded wrist strap or touch a safety grounded object before you handle the components.
3. Hold components by the edges and do not touch the ICs.
4. Whenever you uninstall any component, place it on a grounded anti-static pad or in the bag that comes with the component.
5. When placing screws into the screw holes to secure the motherboard to the chassis, please do not over-tighten the screws! Doing so may damage the motherboard.

Before you install or remove any component, ensure that the power is switched off or the power cord is detached from the power supply. Failure to do so may cause severe damage to the motherboard, peripherals, and/or components.

2.3 Installing the CPU

Unplug all power cables before installing the CPU.

1

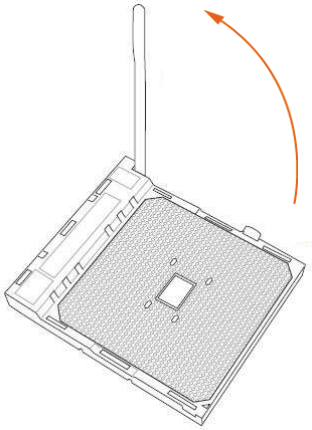

2

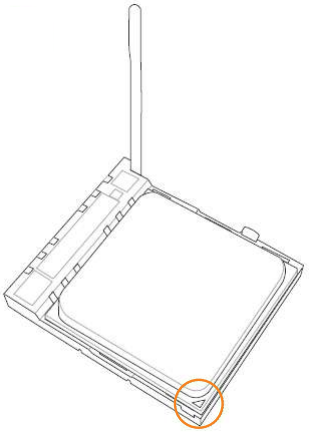

3

2.4 Installing the CPU Fan and Heatsink

After you install the CPU into this motherboard, it is necessary to install a larger heatsink and cooling fan to dissipate heat. You also need to spray thermal grease between the CPU and the heatsink to improve heat dissipation. Make sure that the CPU and the heatsink are securely fastened and in good contact with each other.

*Please be aware of the maximum dimensions of the heatsink to be used is 116 * 83.65mm.*

Please turn off the power or remove the power cord before changing a CPU or heatsink.

Installing the CPU Box Cooler SR1

1

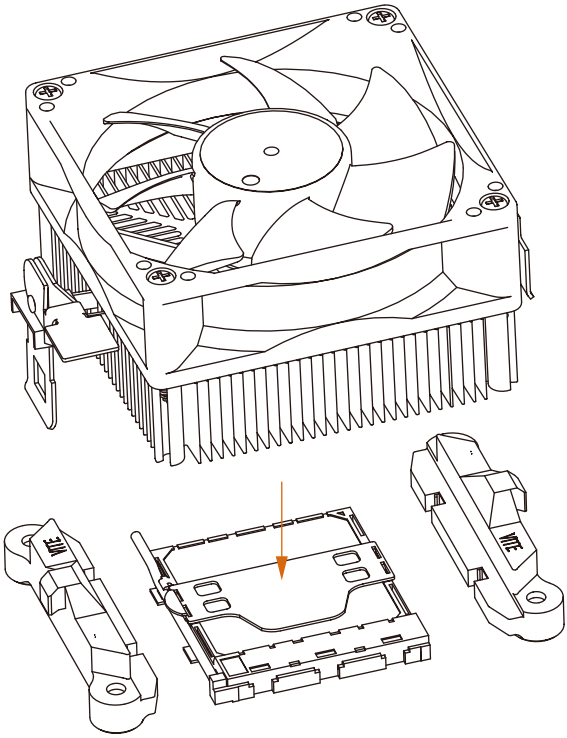

2

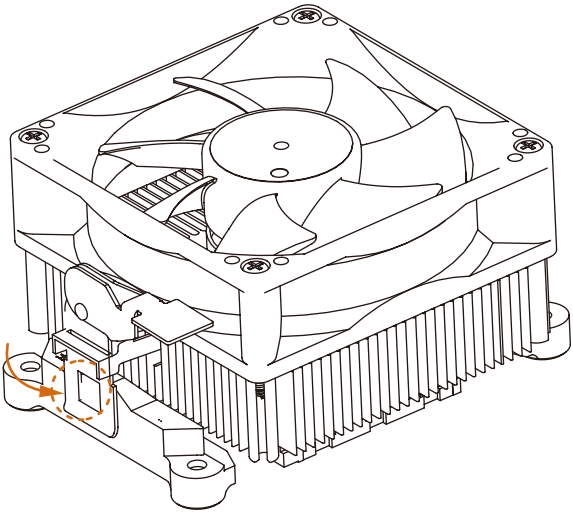

3

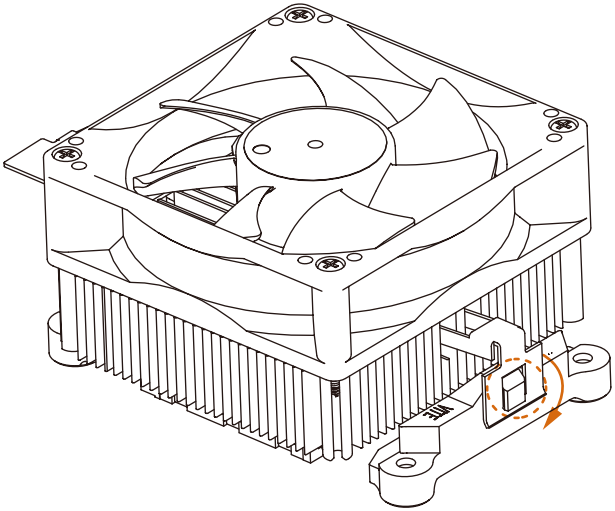

4

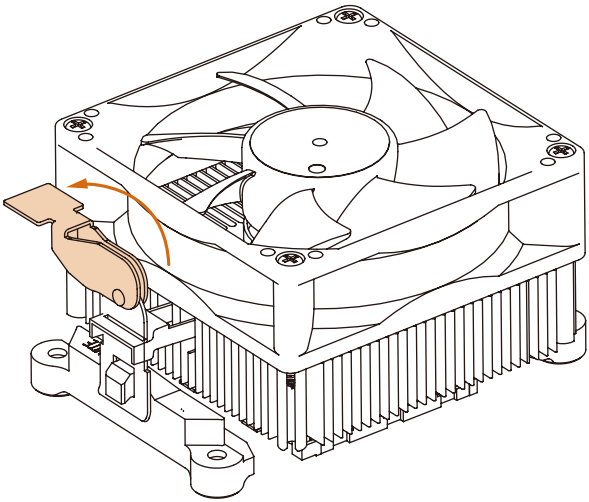

2.5 Installing Memory Modules (DIMM)

This motherboard provides four 288-pin DDR4 (Double Data Rate 4) DIMM slots, and supports Dual Channel Memory Technology.

1. *For dual channel configuration, you always need to install identical (the same brand, speed, size and chip-type) DDR4 DIMM pairs.*
2. *It is unable to activate Dual Channel Memory Technology with only one or three memory module installed.*
3. *It is not allowed to install a DDR, DDR2 or DDR3 memory module into a DDR4 slot; otherwise, this motherboard and DIMM may be damaged.*

DDR4 UDIMM Maximum Frequency Support

Ryzen Series CPUs (Pinnacle Ridge):

UDIMM Memory Slot				Frequency (Mhz)
A2	A1	B2	B1	
-	SR	-	-	2666
-	DR	-	-	2400
-	SR	-	SR	2666
-	DR	-	DR	2400
SR	SR	SR	SR	2133
SR/DR	DR	SR/DR	DR	1866

1

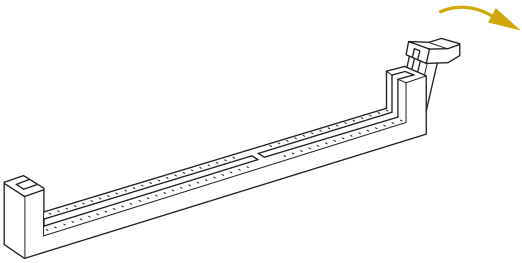

2

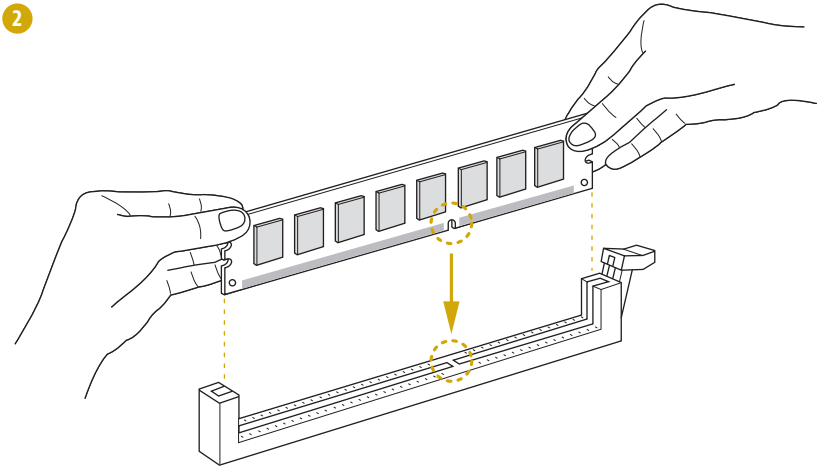

3

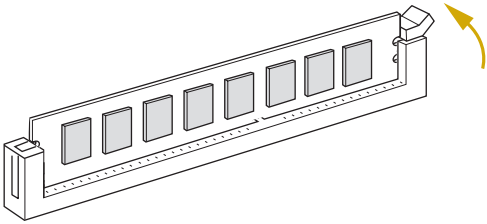

The DIMM only fits in one correct orientation. It will cause permanent damage to the motherboard and the DIMM if you force the DIMM into the slot at incorrect orientation.

2.6 Expansion Slots (PCI Express Slots)

There are 3 PCI Express slots on this motherboard.

PCIE slot:

PCIE4 (PCIE 3.0 x16 slot, from CPU) is used for PCI Express x8 lane width cards.
PCIE5 (PCIE 2.0 x1 slot, from promontory) is used for PCI Express x1 lane width cards.
PCIE6 (PCIE 3.0 x16 slot, from CPU) is used for PCI Express x16 lane width cards.

Slot	Generation	Mechanical	Electrical	Source
PCIE6	3.0	x16	x16	CPU
PCIE5	2.0	x1	x1	Promontory
PCIE4	3.0	x16	x8	CPU

PCIe Slot Configurations

	PCIE4	PCIE6
Single PCIE Card	N/A	x16
Two PCIE Cards	x8	x8

Installing an expansion card

Step 1. Before installing an expansion card, please make sure that the power supply is switched off or the power cord is unplugged. Please read the documentation of the expansion card and make necessary hardware settings for the card before you start the installation.

Step 2. Remove the system unit cover (if your motherboard is already installed in a chassis).

Step 3. Remove the bracket facing the slot that you intend to use. Keep the screws for later use.

Step 4. Align the card connector with the slot and press firmly until the card is completely seated on the slot.

Step 5. Fasten the card to the chassis with screws.

Step 6. Replace the system cover.

2.7 Jumpers Setup

The illustration shows how jumpers are setup. When the jumper cap is placed on the pins, the jumper is "Short". If no jumper cap is placed on the pins, the jumper is "Open". The illustration shows a 3-pin jumper whose pin1 and pin2 are "Short" when a jumper cap is placed on these 2 pins.

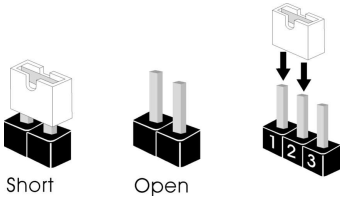

Chassis ID1 Jumper (3-pin CHASSIS_ID1) (see p.7, No. 28) Chassis ID2 Jumper (3-pin CHASSIS_ID2) (see p.7, No. 29) Chassis ID3 Jumper (3-pin CHASSIS_ID3) (see p.7, No. 27)	1_2 1_2 1_2 Board Level SKU (Default)	1_2 1_2 2_3 Reserved for system level use
Chassis ID1 Jumper (3-pin CHASSIS_ID1) (see p.7, No. 28) Chassis ID2 Jumper (3-pin CHASSIS_ID2) (see p.7, No. 29) Chassis ID3 Jumper (3-pin CHASSIS_ID3) (see p.7, No. 27)	1_2 2_3 2_3 Reserved for system level use	1_2 2_3 1_2 Reserved for system level use

English

Chassis ID1 Jumper (3-pin CHASSIS_ID1) (see p.7, No. 28) Chassis ID2 Jumper (3-pin CHASSIS_ID2) (see p.7, No. 29) Chassis ID3 Jumper (3-pin CHASSIS_ID3) (see p.7, No. 27)	2_3 1_2 1_2 Reserved for system level use	2_3 1_2 2_3 Reserved for system level use
Chassis ID1 Jumper (3-pin CHASSIS_ID1) (see p.7, No. 28) Chassis ID2 Jumper (3-pin CHASSIS_ID2) (see p.7, No. 29) Chassis ID3 Jumper (3-pin CHASSIS_ID3) (see p.7, No. 27)	2_3 2_3 1_2 Reserved for system level use	2_3 2_3 2_3 Reserved for system level use
SATA DOM Power Jumper (3-pin SATAPWR1) (see p.7, No. 15)	1_2 SATA DOM (SATA3_0) requires 5V power supply	2_3 SATA DOM (SATA3_0) does NOT require 5V power supply (Default)

Consult the documentation that comes with your SATA DOM and check whether or not Pin 7 requires 5V power supply.

If the connected SATA DOM requires 5V power supply, move the jumper caps placed on the SATA DOM Power Jumper (SATAPWR1) from pins 2-3 (default) to pins 1-2.

If the connected SATA DOM does NOT require 5V power supply, connect the SATA DOM power cable to the SATA DOM power header (SATAPWR1) and there is no need to change the default jumper setting of the SATA DOM Power Jumper (pins 2-3).

Warning! Incorrect setting of the SATA DOM Power Jumper (SATAPWR1) may cause damage to the motherboard or your SATA DOM.

2.8 Onboard Headers and Connectors

Onboard headers and connectors are NOT jumpers. Do NOT place jumper caps over these headers and connectors. Placing jumper caps over the headers and connectors will cause permanent damage to the motherboard.

System Panel Header
(9-pin PANEL1)
(see p.7, No. 22)

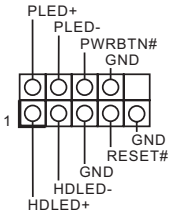

Connect the power switch, reset switch and system status indicator on the chassis to this header according to the pin assignments. Particularly note the positive and negative pins before connecting the cables.

PWRBTN (Power Switch):
Connect to the power switch on the chassis front panel. You may configure the way to turn off your system using the power switch.

RESET (Reset Switch):
Connect to the reset switch on the chassis front panel. Press the reset switch to restart the computer if the computer freezes and fails to perform a normal restart.

PLED (System Power LED):
Connect to the power status indicator on the chassis front panel. The LED is on when the system is operating. The LED is off when the system is in S4 sleep state or powered off (S5).

HDLED (Hard Drive Activity LED):
Connect to the hard drive activity LED on the chassis front panel. The LED is on when the hard drive is reading or writing data.

The front panel design may differ by chassis. A front panel module mainly consists of power switch, reset switch, power LED, hard drive activity LED, speaker and etc. When connecting your chassis front panel module to this header, make sure the wire assignments and the pin assignments are matched correctly.

Auxiliary Panel Header
(18-pin AUX_PANEL1)
(see p.7, No. 23)

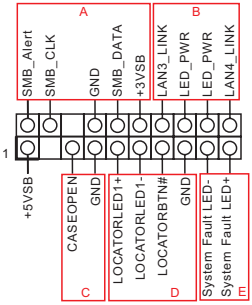

This header supports multiple functions on the front panel, including the front panel SMB, internet status indicator and chassis intrusion pin.

A. Front panel SMBus connecting pin (6-1 pin FPSMB)
This header allows you to connect SMBus (System Management Bus) equipment. It can be used for communication between peripheral equipment in the system, which has slower transmission rates, and power management equipment.

B. Internet status indicator (2-pin LAN3_LED, LAN4_LED)
These two 2-pin headers allow you to use the Gigabit internet indicator cable to connect to the LAN status indicator. When this indicator flickers, it means that the internet is properly connected.

C. Chassis intrusion pin (2-pin CHASSIS)
This header is provided for host computer chassis with chassis intrusion detection designs. In addition, it must also work with external detection equipment, such as a chassis intrusion detection sensor or a microswitch. When this function is activated, if any chassis component movement occurs, the sensor will immediately detect it and send a signal to this header, and the system will then record this chassis intrusion event. The default setting is set to the CASEOPEN and GND pin; this function is off.

D. Locator LED (4-pin LOCATOR)
This header is for the locator switch and LED on the front panel.

E. System Fault LED (2-pin LOCATOR)
This header is for the Fault LED on the system.

Serial ATA3 DOM Connector
(SATA3_0)
(see p.7, No. 14)

The SATA3 DOM connector supports both a SATA DOM (Disk-On-Module) and a SATA data cable for internal storage device.

Serial ATA3 Connectors
(SATA3_1:
see p.7, No. 13)
(SATA3_2:
see p.7, No. 17)
(SATA3_3:
see p.7, No. 18)
(SATA3_4:
see p.7, No. 20)
(SATA3_5:
see p.7, No. 19)

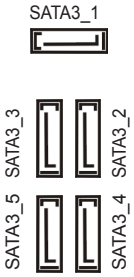

These connectors support SATA data cables for internal storage devices with up to 6.0 Gb/s data transfer rate.

USB 3.1 Gen1 Header
(19-pin USB3_3_4)
(see p.7, No. 16)

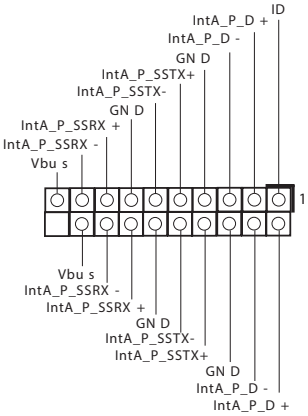

Besides two default USB 3.1 Gen1 ports on the I/O panel, there is one USB 3.1 Gen1 header on this motherboard. This USB 3.1 Gen1 header can support two USB 3.1 Gen1 ports.

Front Fan Connectors
(4-pin FAN2)
(see p.7, No. 7)
(4-pin FAN3)
(see p.7, No. 5)
(4-pin FAN4)
(see p.7, No. 6)
(4-pin FAN5)
(see p.7, No. 25)
(4-pin FAN6)
(see p.7, No. 26)

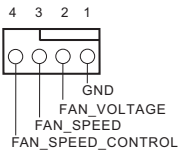

Please connect fan cables to the fan connectors and match the black wire to the ground pin. All fans support Fan Control.

CPU Fan Connector
(4-pin FAN1)
(see p.7, No. 9)

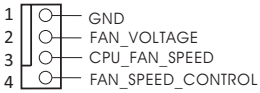

This motherboard provides one 4-Pin CPU fan (Quiet Fan) connectors. If you plan to connect a 3-Pin CPU fan, please connect it to Pin 1-3.

**For more details, please refer to the Cooler QVL list on the ASRock Rack website.*

ATX Power Connector
(24-pin ATXPWR1)
(see p.7, No. 4)

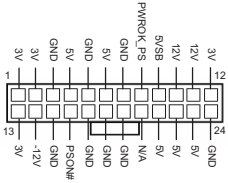

This motherboard provides a 24-pin ATX power connector. To use a 20-pin ATX power supply, please plug it along Pin 1 and Pin 13.

ATX 12V Power Connectors
(8-pin ATX12V1)
(see p.7, No. 1)

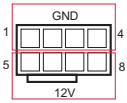

This motherboard provides one 8-pin ATX 12V power connector.

TPM Header
(17-pin TPMS1)
(see p.7, No. 24)

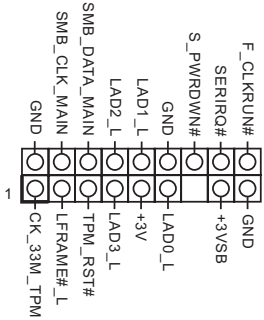

This connector supports Trusted Platform Module (TPM) system, which can securely store keys, digital certificates, passwords, and data. A TPM system also helps enhance network security, protects digital identities, and ensures platform integrity.

PSU SMBus Header
(5-pin PSU_SMB1)
(see p.7, No. 3)

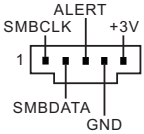

PSU SMBus monitors the status of the power supply, fan and system temperature.

English

Intelligent Platform Management Bus Header (4-pin IPMB_1) (see p.7, No. 31)	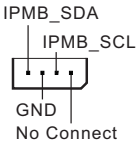	This 4-pin connector is used to provide a cabled base-board or front panel connection for value added features and 3rd-party add-in cards, such as Emergency Management cards, that provide management features using the IPMB.
Baseboard Management Controller SMBus Header (5-pin BMC_SMB_1) (see p.7, No. 30)	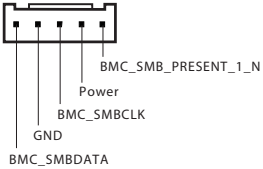	The header is used for the SMBUS devices.
Clear CMOS Pad (CLRMOS1) (see p.7, No. 21)		This allows you to clear the data in CMOS. To clear CMOS, take out the CMOS battery and short the Clear CMOS Pad.

2.9 Dr. Debug

Dr. Debug is used to provide code information, which makes troubleshooting even easier. Please see the diagrams below for reading the Dr. Debug codes.

Code	Description
00	Please check if the CPU is installed correctly and then clear CMOS.
0d	Problem related to memory, VGA card or other devices. Please clear CMOS, re-install the memory and VGA card, and remove other USB, PCI devices.
01 - 54 (except 0d), 5A- 60	Problem related to memory. Please re-install the CPU and memory then clear CMOS. If the problem still exists, please install only one memory module or try using other memory modules.
55	The Memory could not be detected. Please re-install the memory and CPU. If the problem still exists, please install only one memory module or try using other memory modules.
61 - 91	Chipset initialization error. Please press reset or clear CMOS.
92 - 99	Problem related to PCI-E devices. Please re-install PCI-E devices or try installing them in other slots. If the problem still exists, please remove all PCI-E devices or try using another VGA card.
A0 - A7	Problem related to IDE or SATA devices. Please re-install IDE and SATA devices. If the problem still exists, please clear CMOS and try removing all SATA devices.
b0	Problem related to memory. Please re-install the CPU and memory. If the problem still exists, please install only one memory module or try using other memory modules.
b4	Problem related to USB devices. Please try removing all USB devices.
b7	Problem related to memory. Please re-install the CPU and memory then clear CMOS. If the problem still exists, please install only one memory module or try using other memory modules.
d6	The VGA could not be recognized. Please clear CMOS and try re-installing the VGA card. If the problem still exists, please try installing the VGA card in other slots or use other VGA cards.
d7	The Keyboard and mouse could not be recognized. Please try re-installing the keyboard and mouse.
d8	Invalid Password.
FF	Please check if the CPU is installed correctly and then clear CMOS.

2.10 Unit Identification purpose LED/Switch

With the UID button, You are able to locate the server you're working on from behind a rack of servers.

Unit Identification purpose LED/Switch (UID1)		When the UID button on the front or rear panel is pressed, the front/rear UID blue LED indicator will be truned on. Press the UID button again to turn off the indicator.

2.11 Driver Installation Guide

To install the drivers to your system, please insert the support CD to your optical drive first. Then, the drivers compatible to your system can be auto-detected and listed on the support CD driver page. Please follow the order from top to bottom to install those required drivers. Therefore, the drivers you install can work properly.

2.12 M.2_SSD (NGFF) Module Installation Guide

The M.2, also known as the Next Generation Form Factor (NGFF), is a small size and versatile card edge connector that aims to replace mPCIe and mSATA. The M.2_SSD (NGFF) Socket 3 (M2_1) can accommodate either a M.2 PCI Express module up to Gen 2 x4 (20Gb/s). The M.2_SSD (NGFF) Socket 3 (M2_2) can accommodate either a M.2 SATA3 6.0 Gb/s module or a M.2 PCI Express module up to Gen 3 x2 (16Gb/s).

Installingg the M.2_SSD (NGFF) Module

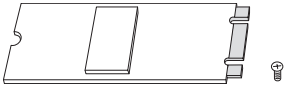

Step 1

Prepare a M.2_SSD (NGFF) module and the screw.

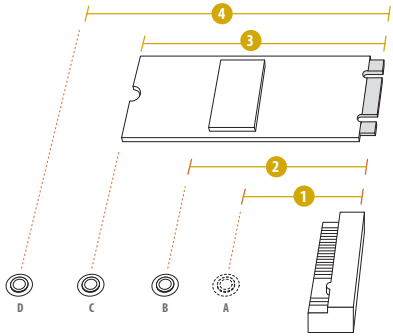

Step 2

Depending on the PCB type and length of your M.2_SSD (NGFF) module, find the corresponding nut location to be used.

No.	1	2	3	4
Nut Location	A	B	C	D
PCB Length	4.2cm	6cm	8cm	10cm
Module Type	Type 2242	Type2260	Type 2280	Type 22110

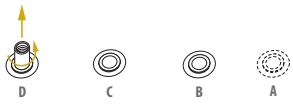

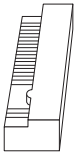

Step 3

Move the standoff based on the module type and length.
The standoff is placed at the nut location D by default. Skip Step 3 and 4 and go straight to Step 5 if you are going to use the default nut. Otherwise, release the standoff by hand.

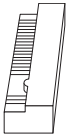

Step 4

Peel off the yellow protective film on the nut to be used. Hand tighten the standoff into the desired nut location on the motherboard.

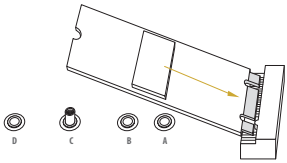

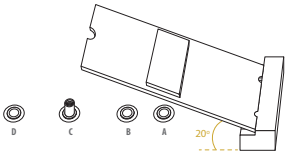

Step 5

Align and gently insert the M.2 (NGFF) SSD module into the M.2 slot. Please be aware that the M.2 (NGFF) SSD module only fits in one orientation.

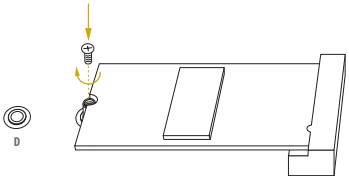

Step 6

Tighten the screw with a screwdriver to secure the module into place. Please do not overtighten the screw as this might damage the module.

For the latest updates of M.2_SSD (NFGG) module support list, please visit our website for details: http://www.asrockrack.com

Chapter 3 UEFI Setup Utility

3.1 Introduction

This section explains how to use the UEFI SETUP UTILITY to configure your system. The UEFI chip on the motherboard stores the UEFI SETUP UTILITY. You may run the UEFI SETUP UTILITY when you start up the computer. Please press <F2> or <Del> during the Power-On-Self-Test (POST) to enter the UEFI SETUP UTILITY; otherwise, POST will continue with its test routines.

If you wish to enter the UEFI SETUP UTILITY after POST, restart the system by pressing <Ctrl> + <Alt> + <Delete>, or by pressing the reset button on the system chassis. You may also restart by turning the system off and then back on.

Because the UEFI software is constantly being updated, the following UEFI setup screens and descriptions are for reference purpose only, and they may not exactly match what you see on your screen.

3.1.1 UEFI Menu Bar

The top of the screen has a menu bar with the following selections:

Item	Description
Main	To set up the system time/date information
Advanced	To set up the advanced UEFI features
Server Mgmt	To manage the server
Security	To set up the security features
Boot	To set up the default system device to locate and load the Operating System
Event Logs	For event log configuration
Exit	To exit the current screen or the UEFI SETUP UTILITY

Use <←> key or <→> key to choose among the selections on the menu bar, and then press <Enter> to get into the sub screen.

English

3.1.2 Navigation Keys

Please check the following table for the function description of each navigation key.

Navigation Key(s)	Function Description
← / →	Moves cursor left or right to select Screens
↑ / ↓	Moves cursor up or down to select items
+ / -	To change option for the selected items
<Tab>	Switch to next function
<Enter>	To bring up the selected screen
<PGUP>	Go to the previous page
<PGDN>	Go to the next page
<HOME>	Go to the top of the screen
<END>	Go to the bottom of the screen
<F1>	To display the General Help Screen
<F7>	Discard changes and exit the UEFI SETUP UTILITY
<F9>	Load optimal default values for all the settings
<F10>	Save changes and exit the UEFI SETUP UTILITY
<F12>	Print screen
<ESC>	Jump to the Exit Screen or exit the current screen

3.2 Main Screen

Once you enter the UEFI SETUP UTILITY, the Main screen will appear and display the system overview. The Main screen provides system overview information and allows you to set the system time and date.

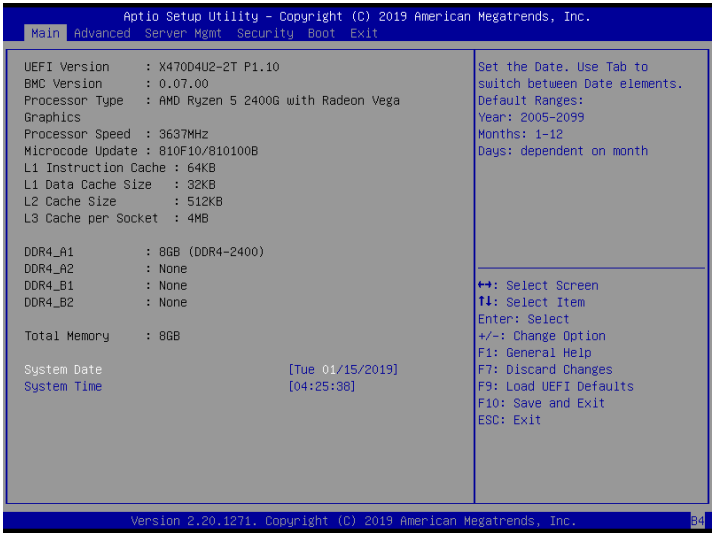

English

3.3 Advanced Screen

In this section, you may set the configurations for the following items: CPU Configuration, Chipset Configuration, Storage Configuration, ACPI Configuration, USB Configuration, Super IO Configuration, Serial Port Console Redirection, H/W Monitor, AMD CBS, AMD PBS and Instant Flash.

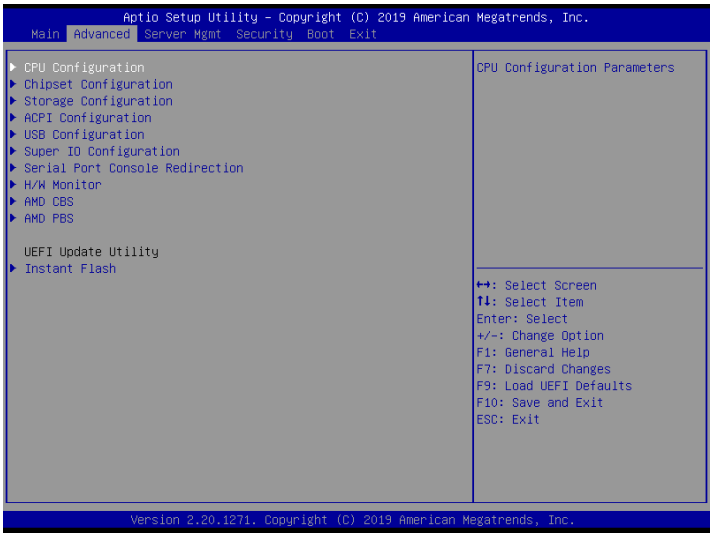

Setting wrong values in this section may cause the system to malfunction.

English

3.3.1 CPU Configuration

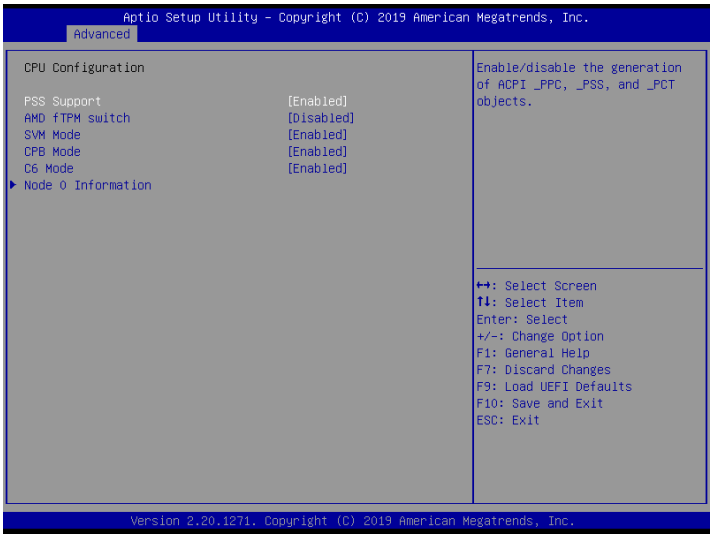

PSS Support

Enable/disable the generation of ACPI _PPC, _PSS, and _PCT objects.

AMD fTPM Switch

To select .0: Auto (Depend on Tcg module). 1: Disabled fTPM. 2: OnBoard SPI TPM2.0

SVM Mode

Enable/disable CPU Virtualization.

CPB Mode

Enable/disable CPB.

C6 Mode

Enable/disable C6.

Node 0 Information

View Memory Information related to Node 0.

3.3.2 Chipset Configuration

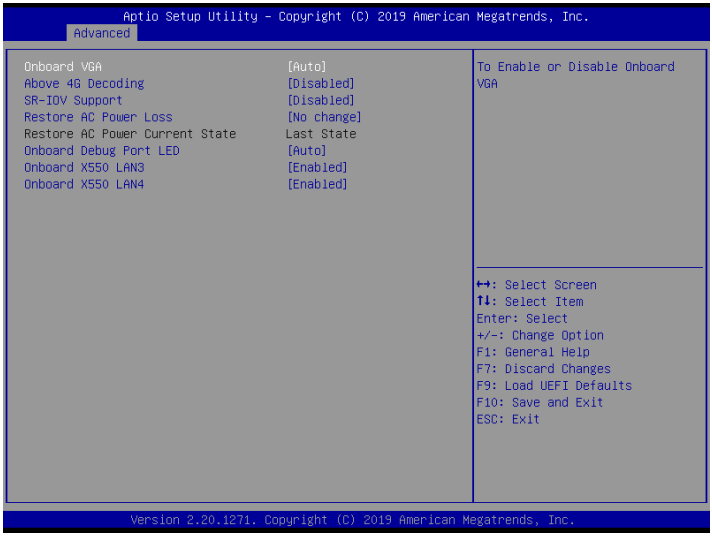

Onboard VGA

To enable or disable Onboard VGA.

Above 4G Decoding

Globally Enables or Disables 64bit capable Devices to be Decoded in Above 4G Address Space (Only if System Supports 64 bit PCI Decoding).

SR-IOV Support

If system has SR-IOV capable PCIe Devices, this option Enables or Disables Single Root IO Virtualization Support.

Restore AC Power Loss

This allows you to set the power state after a power failure. If [Power Off] is selected, the power will remain off when the power recovers. If [Power On] is selected, the system will start to boot up when the power recovers.

Restore AC Power Current State

This allows you to restore AC Power Current State.

Onboard Debug Port LED

Enable or disable the onboard Dr. Debug LED.

Onboard X550 LAN3

To enable or disable Onabord LAN.

Onboard X550 LAN4

To enable or disable Onabord LAN.

3.3.3 Storage Configuration

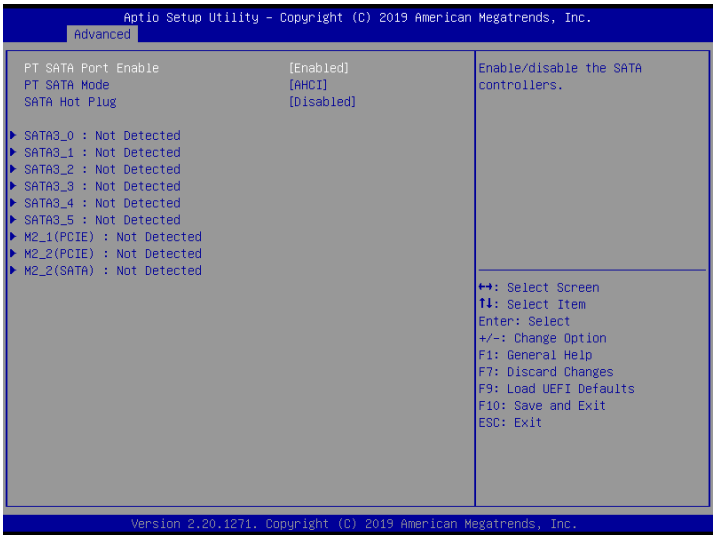

PT SATA Port Enable

Enable/disable the SATA controllers.

PT SATA Mode

Select Promontory SATA Type.

SATA Hot Plug

Enable/disable the SATA Hot Plug Function.

English

3.3.4 ACPI Configuration

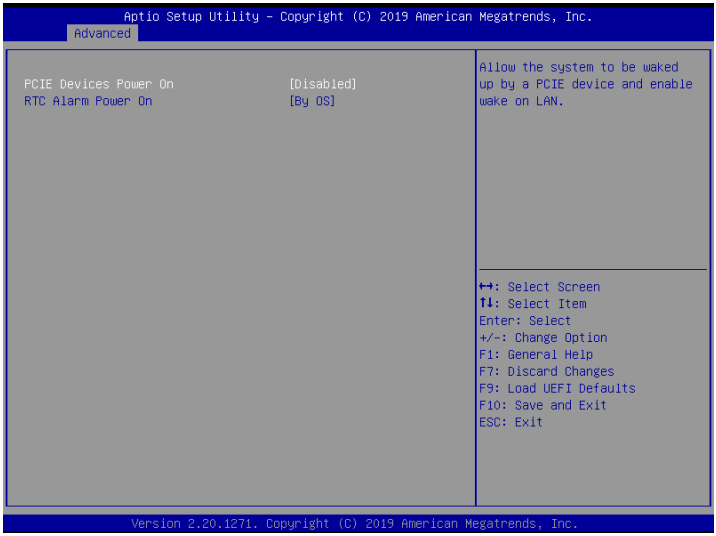

PCIE Devices Power On

Allow the system to be waked up by a PCIE device and enable wake on LAN.

RTC Alarm Power On

Use this item to enable or disable RTC (Real Time Clock) to power on the system.

3.3.5 USB Configuration

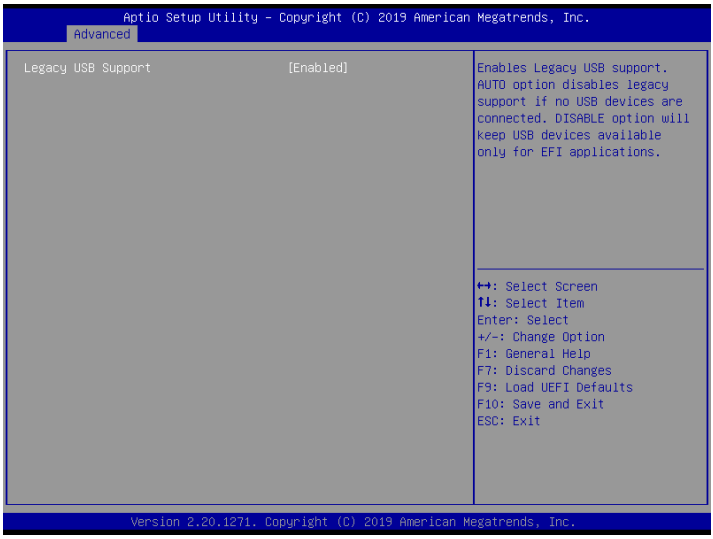

Legacy USB Support

Use this option to enable or disable legacy support for USB devices. The default value is [Enabled].

English

3.3.6 Super IO Configuration

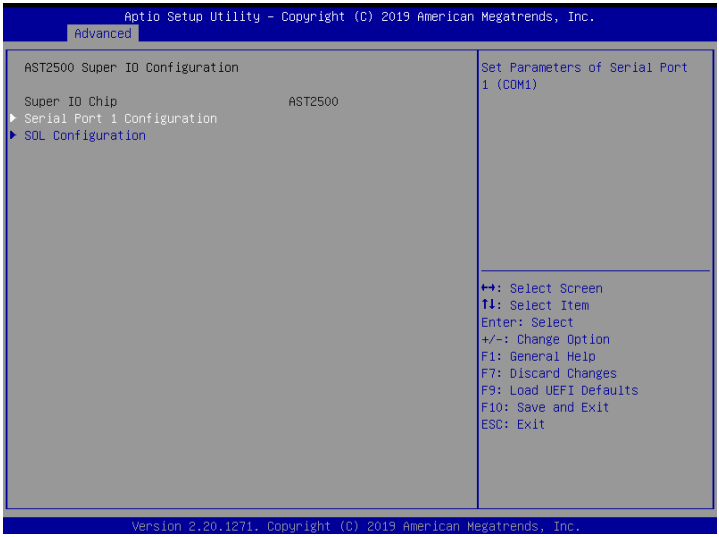

Serial Port 1 Configuration

Use this item to set parameters of Serial Port 1 (COM1).

Serial Port

Use this item to enable or disable the serial port.

Serial Port Address

Use this item to select an optimal setting for Super IO device.

SOL Configuration

Use this item to set parameters of SOL.

SOL Port

Use this item to set parameters of SOL.

Serial Port Address

Use this item to select an optimal setting for Super IO device.

3.3.7 Serial Port Console Redirection

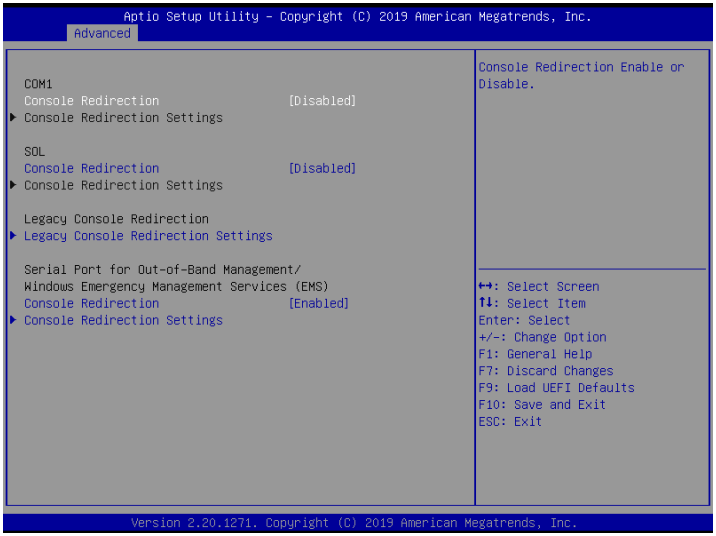

COM1 / SOL

Console Redirection

Use this option to enable or disable Console Redirection. If this item is set to Enabled, you can select a COM Port to be used for Console Redirection.

Console Redirection Settings

Use this option to configure Console Redirection Settings, and specify how your computer and the host computer to which you are connected exchange information.

Terminal Type

Use this item to select the preferred terminal emulation type for out-of-band management. It is recommended to select [VT-UTF8].

Option	Description
VT100	ASCII character set
VT100+	Extended VT100 that supports color and function keys
VT-UTF8	UTF8 encoding is used to map Unicode chars onto 1 or more bytes
ANSI	Extended ASCII character set

English

Bits Per Second

Use this item to select the serial port transmission speed. The speed used in the host computer and the client computer must be the same. Long or noisy lines may require lower transmission speed. The options include [9600], [19200], [57600] and [115200].

Data Bits

Use this item to set the data transmission size. The options include [7] and [8] (Bits).

Parity

Use this item to select the parity bit. The options include [None], [Even], [Odd], [Mark] and [Space].

Stop Bits

The item indicates the end of a serial data packet. The standard setting is [1] Stop Bit. Select [2] Stop Bits for slower devices.

Flow Control

Use this item to set the flow control to prevent data loss from buffer overflow. When sending data, if the receiving buffers are full, a "stop" signal can be sent to stop the data flow. Once the buffers are empty, a "start" signal can be sent to restart the flow. Hardware flow uses two wires to send start/stop signals. The options include [None] and [Hardware RTS/CTS].

VT-UTF8 Combo Key Support

Use this item to enable or disable the VT-UTF8 Combo Key Support for ANSI/VT100 terminals.

Recorder Mode

Use this item to enable or disable Recorder Mode to capture terminal data and send it as text messages.

Resolution 100x31

Use this item to enable or disable extended terminal resolution support.

Legacy OS Redirection Resolution

Use this item to select the number of rows and columns used in legacy OS redirection.

Putty Keypad

Use this item to select Function Key and Keypad on Putty.

Redirection After BIOS POST

If the [LoadBooster] is selected, legacy console redirection is disabled before booting to legacy OS. If [Always Enabled] is selected, legacy console redirection is enabled for legacy OS. The default value is [Always Enabled].

Legacy Console Redirection

Legacy Console Redirection Settings

Use this option to configure Legacy Console Redirection Settings, and specify how your computer and the host computer to which you are connected exchange information.

Redirection COM Port

Select a COM port to display redirection of Legacy OS and Legacy OPROM Messages.

Resolution

On Legacy OS, the Number of Rows and Columns supported redirection.

Redirect After POST

When Bootloader is selected, then Legacy Console Redirection is disabled before booting to legacy OS. When Always Enable is selected, then Legacy Console Redirection is enabled for legacy OS. Default setting for this option is set to Always Enable.

Serial Port for Out-of-Band Management/Windows Emergency Management Services (EMS)

Console Redirection

Use this option to enable or disable Console Redirection. If this item is set to Enabled, you can select a COM Port to be used for Console Redirection.

Console Redirection Settings

Use this option to configure Console Redirection Settings, and specify how your computer and the host computer to which you are connected exchange information.

Terminal Type

Use this item to select the preferred terminal emulation type for out-of-band management. It is recommended to select [VT-UTF8].

Option	Description
VT100	ASCII character set
VT100+	Extended VT100 that supports color and function keys
VT-UTF8	UTF8 encoding is used to map Unicode chars onto 1 or more bytes
ANSI	Extended ASCII character set

Bits Per Second

Use this item to select the serial port transmission speed. The speed used in the host computer and the client computer must be the same. Long or noisy lines may require lower transmission speed. The options include [9600], [19200], [57600] and [115200].

Flow Control

Use this item to set the flow control to prevent data loss from buffer overflow. When sending data, if the receiving buffers are full, a "stop" signal can be sent to stop the data flow. Once the buffers are empty, a "start" signal can be sent to restart the flow. Hardware flow uses two wires to send start/stop signals. The options include [None], [Hardware RTS/CTS], and [Software Xon/Xoff].

Data Bits

Parity

Stop Bits

3.3.8 H/W Monitor

In this section, it allows you to monitor the status of the hardware on your system, including the parameters of the CPU temperature, motherboard temperature, CPU fan speed, chassis fan speed, and the critical voltage.

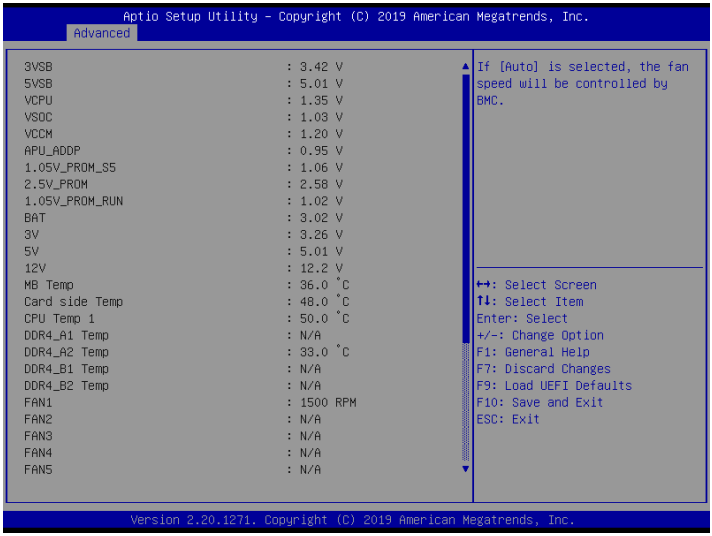

Fan Control

If [Auto] is selected, the fan speed will controlled by BMC.
If [Manual] is selected, configure the items below.

FAN1

This allows you to set the CPU fan1's speed. The default value is [Smart Fan].

FAN 2

This allows you to set the front fan 2's speed. The default value is [Smart Fan].

FAN 3

This allows you to set the front fan 3's speed. The default value is [Smart Fan].

FAN 4

This allows you to set the front fan 4's speed. The default value is [Smart Fan].

FAN 5

This allows you to set the front fan 5's speed. The default value is [Smart Fan].

FAN 6

This allows you to set the front fan 6's speed. The default value is [Smart Fan].

Smart Fan Control

This allows you to set the Smart fan's level speed.

Smart Fan Duty Control

Smart Fan Duty x (x means 1 to 11 stage)

This allows you to set duty cycle for each stage.

Smart Fan Temp Control

Smart Fan Temp x (x means 1 to 11 stage)

This allows you to set temperature for each stage.

3.3.9 AMD CBS

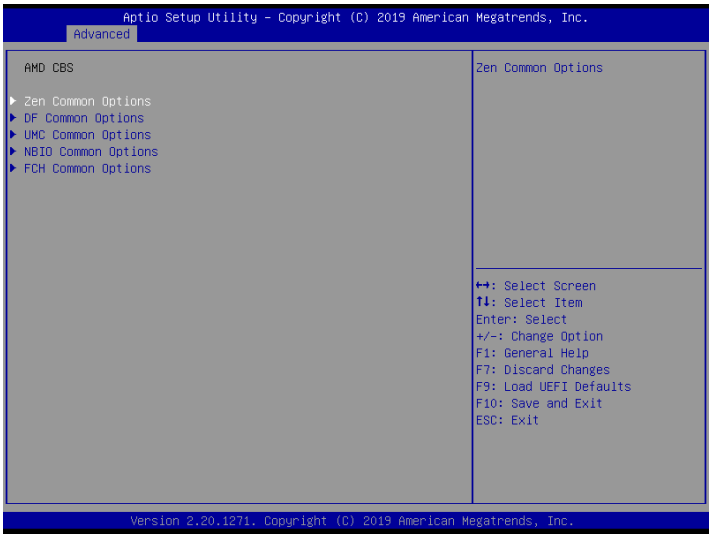

Zen Common Options

Use this item to configure Zen Common options.

DF Common Options

Use this item to configure DF Common options.

UMC Common Options

Use this item to configure UMC Common options.

NBIO Common Options

Use this item to configure NBIO Common options.

FCH Common Options

Use this item to configure FCH Common options.

3.3.10 AMD PBS

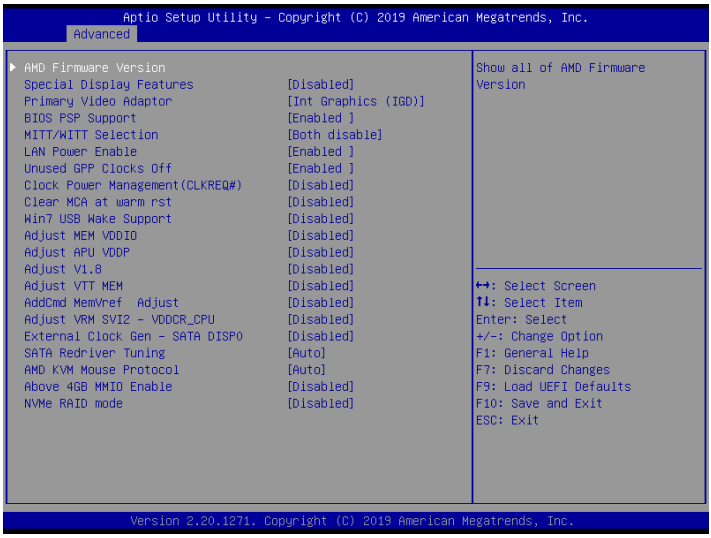

AMD Firmware Version

Show all of AMD Firmware Version.

Special Display Features

Enable/Disable PowerXpress HybridGraphics.

Primary Video Adaptor

Select Internal/External Graphics.

BIOS PSP Support

Enable/Disable BIOS PSP driver execution (including all C2P/P2C mailbox, Secure S3, fTPM Support).

MITT/WITT Selection

Use this item to configure MITT/WITT Selection.

LAN Power Enable

Enable or disable LAN Power.

Unused GPP Clocks Off

Turn Unused GPP Clocks Off.

Clock Power Management (CLKREQ#)

Enable or disable CLKREQ#.

Clear CMA at warm rst

Enable or disable clearing MCA errors at warm reset. If Enabled, just clear MCA status including that MC0: MSR0000_0401, MC1: MSR0000_0405, MC2: MSR0000_0409, MC4: MSR0000_0411 and MC5: MSR0000_0415.

Win7 USB Wake Support

This option enables USB devices to wake up the system (work with Win7 only).

Adjust MEM VDDIO

Adjust MEM VDDIO, stepping is 4mV. VddIo = 1.2V +/- N * 4 mV, input range is 0-31. Tuning range is 13mV on Turpan.

Adjust APU VDDP

Adjust APU VDDP.

Adjust V1.8

Adjust V1.8, stepping is 3mV. V1.8 = 1.8V +/- N * 3 mV, input range is 0-33. Tuning range is +/- 100 mV.

Adjust VTT MEM

Adjust VTT MEM, stepping is VDDIO * (1/256). VTT_MEM = VDDIO * (N / 256), input range is 113-143.

AddCmd MemVref Adjust

AddCmd MemeVref Adjust, stepping is VDDIO * (1/256). MEM_VREF = VDDIO * (N / 256), input range is 114-142.

Adjust VRM SVI2 - VDDCR_CPU

Offset Mode: +/- based on VID; Gamer Mode: Set VID Directly All the value limit is for test; there's no guarantee that these options are safe.

External Clock Gen - SATA DISP0

Enable External Clock Gen - SATA DISP0.

SATA Redriver Tuning

Enable or disable SATA Redriver Tuning.

AMD KVM Mouse Protocol

Switch KVM Mouse Protocol between Absolut/Simple.

Above 4GB MMIO Enable

Enable or disable Above 4GB MMIO.

NVMe RAID mode

Enable or disable NVMe RAID mode.

3.3.11 Instant Flash

Instant Flash is a UEFI flash utility embedded in Flash ROM. This convenient UEFI update tool allows you to update system UEFI without entering operating systems first like MS-DOS or Windows®. Just save the new UEFI file to your USB flash drive, floppy disk or hard drive and launch this tool, then you can update your UEFI only in a few clicks without preparing an additional floppy diskette or other complicated flash utility. Please be noted that the USB flash drive or hard drive must use FAT32/16/12 file system. If you execute Instant Flash utility, the utility will show the UEFI files and their respective information. Select the proper UEFI file to update your UEFI, and reboot your system after the UEFI update process is completed.

3.4 Server Mgmt

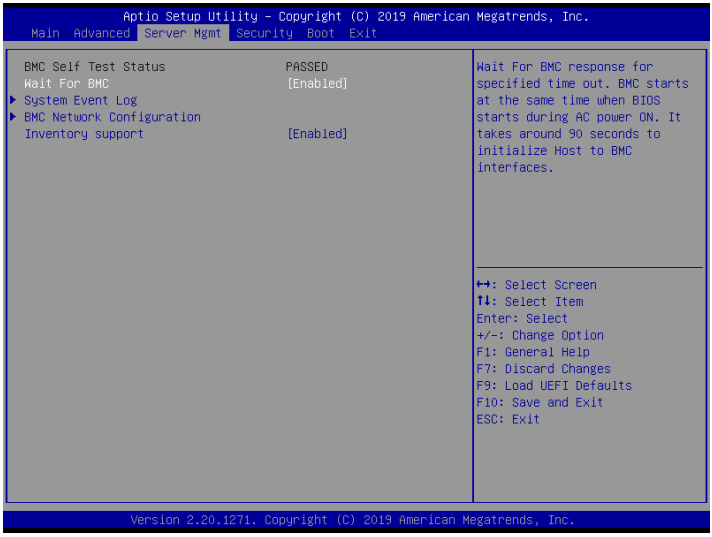

Wait For BMC

Wait For BMC response for specified time out. BMC starts at the same time when BIOS starts during AC power ON. It takes around 90 seconds to initialize Host to BMC interfaces.

3.4.1 System Event Log

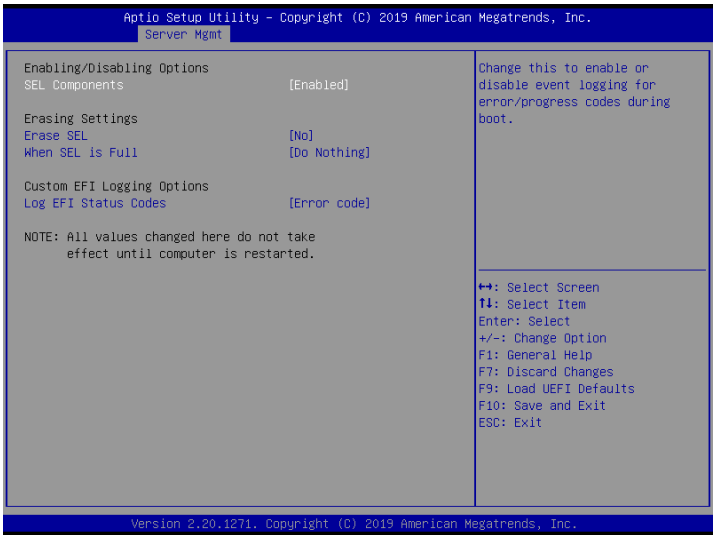

SEL Components

Change this to enable ro disable event logging for error/progress codes during boot.

Erase SEL

Use this to choose options for earsing SEL.

When SEL is Full

Use this to choose options for reactions to a full SEL.

Log EFI Status Codes

Use this item to disable the logging of EFI Status Codes or log only error code or only progress code or both.

3.4.2 BMC Network Configuration

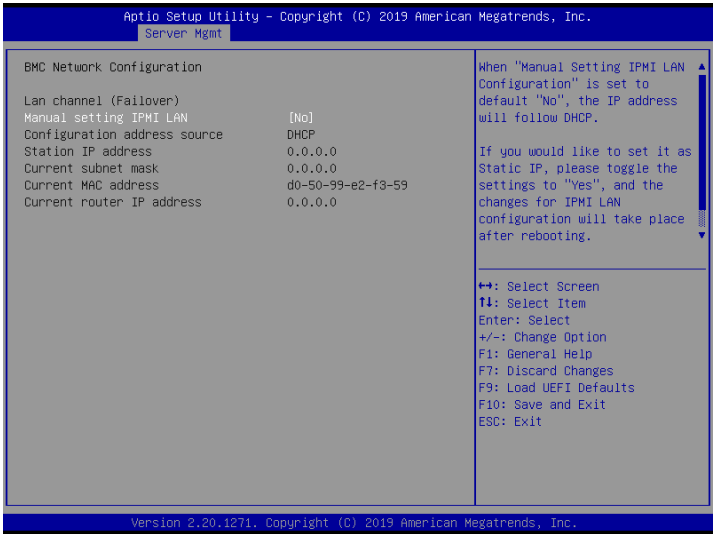

Lan Channel (Failover)

Manual Setting IPMI LAN

If [No] is selected, the IP address is assigned by DHCP. If you prefer using a static IP address, toggle to [Yes], and the changes take effect after the system reboots. The default value is [No].

Configuration Address Source

Select to configure BMC network parameters statically or dynamically(by BIOS or BMC). Configuration options: [Static] and [DHCP].

Static: Manually enter the IP Address, Subnet Mask and Gateway Address in the BIOS for BMC LAN channel configuration.
DHCP: IP address, Subnet Mask and Gateway Address are automatically assigned by the network's DHCP server.

When [DHCP] or [Static] is selected, do NOT modify the BMC network settings on the IPMI web page.

English

The default login information for the IPMI web interface is:
Username: admin
Password: admin

For more instructions on how to set up remote control environment and use the IPMI management platform, please refer to the IPMI Configuration User Guide or go to the Support website at: http://www.asrockrack.com/support/faq.asp

Inventory Support

This will execute inventory function for system. Enabling this item will take some time at system boot.

3.5 Security

In this section, you may set or change the supervisor/user password for the system. For the user password, you may also clear it.

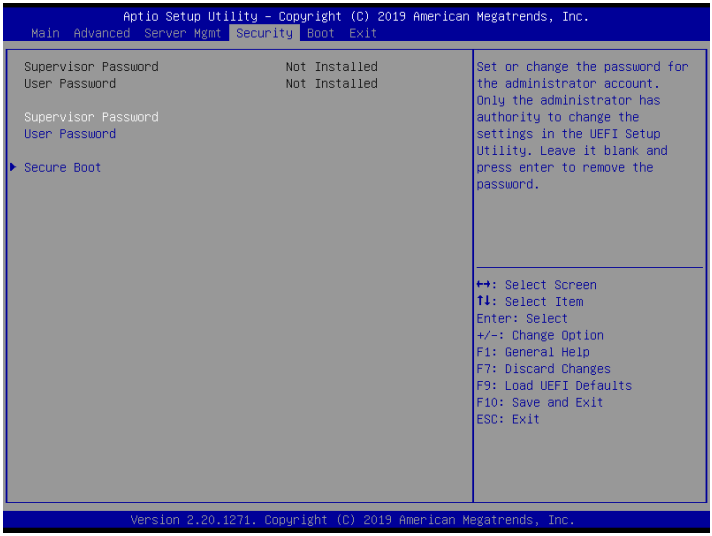

Supervisor Password

Set or change the password for the administrator account. Only the administrator has authority to change the settings in the UEFI Setup Utility. Leave it blank and press enter to remove the password.

User Password

Set or change the password for the user account. Users are unable to change the settings in the UEFI Setup Utility. Leave it blank and press enter to remove the password.

Secure Boot

Use this to enable or disable Secure Boot Control. The default value is [Disabled]. Enable to support Windows Server 2012 R2 or later versions Secure Boot.

Secure Boot Mode

Secure Boot mode selector: Standard/Custom. In Custom mode Secure Boot Variables can be configured without authentication.

3.5.1 Key Management

In this section, expert users can modify Secure Boot Policy variables without full authentication.

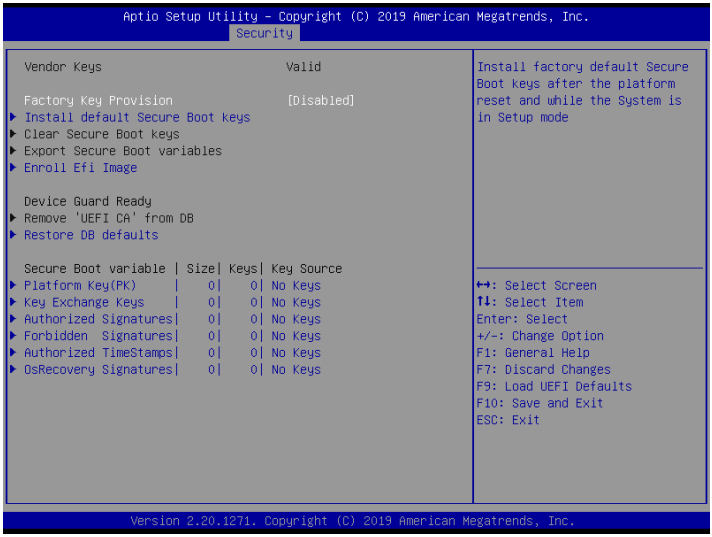

Factory Key Provision

Allow to provision factory default Secure Boot keys when System is in Setup Mode.

Install Default Secure Boot Keys

Please install default secure boot keys if it's the first time you use secure boot.

Enroll Efi Image

Allow the image to run in Secure Boot mode. Enroll SHA256 hash of the binary into Authorized Signature Database (db).

Restore DB Defaults

Restore DB variable to factory defaults.

Platform Key(PK)

Enroll Factory Defaults or load certificates from a file:

1. Public Key Certificate in:

a) EFI_SIGNATURE_LIST

b) EFI_CERT_X509 (DER encoded)

c) EFI_CERT_RSA2048 (bin)

d) EFI_CERT_SHA256, 384, 512

2. Authenticated UEFI Variable

3. EFI PE/COFF Image(SHA256)

Key Source: Default, External, Mixed, Test

Key Exchange Keys

Enroll Factory Defaults or load certificates from a file:

1. Public Key Certificate in:

a) EFI_SIGNATURE_LIST

b) EFI_CERT_X509 (DER encoded)

c) EFI_CERT_RSA2048 (bin)

d) EFI_CERT_SHA256, 384, 512

2. Authenticated UEFI Variable

3. EFI PE/COFF Image(SHA256)

Key Source: Default, External, Mixed, Test

Authorized Signatures

Enroll Factory Defaults or load certificates from a file:

1. Public Key Certificate in:

a) EFI_SIGNATURE_LIST

b) EFI_CERT_X509 (DER encoded)

c) EFI_CERT_RSA2048 (bin)

d) EFI_CERT_SHA256, 384, 512

2. Authenticated UEFI Variable

3. EFI PE/COFF Image(SHA256)

Key Source: Default, External, Mixed, Test

Forbidden Signatures

Enroll Factory Defaults or load certificates from a file:

1. Public Key Certificate in:

a) EFI_SIGNATURE_LIST

b) EFI_CERT_X509 (DER encoded)

c) EFI_CERT_RSA2048 (bin)

d) EFI_CERT_SHA256, 384, 512

2. Authenticated UEFI Variable

3. EFI PE/COFF Image(SHA256)

Key Source: Default, External, Mixed, Test

Authorized TimeStamps

Enroll Factory Defaults or load certificates from a file:

1. Public Key Certificate in:

a) EFI_SIGNATURE_LIST

b) EFI_CERT_X509 (DER encoded)

c) EFI_CERT_RSA2048 (bin)

d) EFI_CERT_SHA256, 384, 512

2. Authenticated UEFI Variable

3. EFI PE/COFF Image(SHA256)

Key Source: Default, External, Mixed, Test

OsRecovery Signatures

Enroll Factory Defaults or load certificates from a file:

1. Public Key Certificate in:

a) EFI_SIGNATURE_LIST

b) EFI_CERT_X509 (DER encoded)

c) EFI_CERT_RSA2048 (bin)

d) EFI_CERT_SHA256, 384, 512

2. Authenticated UEFI Variable

3. EFI PE/COFF Image(SHA256)

Key Source: Default, External, Mixed, Test

3.6 Boot Screen

In this section, it will display the available devices on your system for you to configure the boot settings and the boot priority.

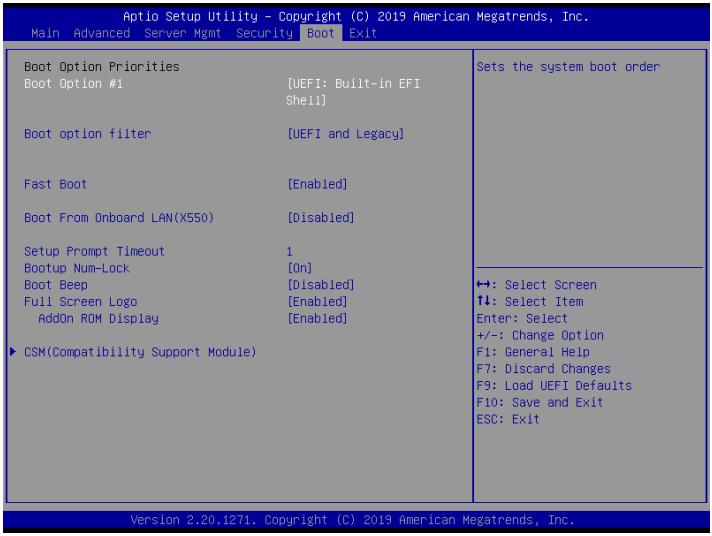

Boot Option #1

Use this item to set the system boot order.

Boot Option Filter

This option controls Legacy/UEFI ROMs priority.

Fast Boot

Enables/Disables fast boot which skips memory training and attempts to boot using last known good configuration.

Boot From Onboard LAN

Use this item to enable or disable the Boot From Onboard LAN feature.

Setup Prompt Timeout

Configure the number of seconds to wait for the UEFI setup utility.

Bootup Num-Lock

If this item is set to [On], it will automatically activate the Numeric Lock function after boot-up.

Boot Beep

Select whether the Boot Beep should be turned on or off when the system boots up. Please note that a buzzer is needed.

Full Screen Logo

Use this item to enable or disable OEM Logo. The default value is [Enabled].

AddOn ROM Display

Use this option to adjust AddOn ROM Display. If you enable the option “Full Screen Logo” but you want to see the AddOn ROM information when the system boots, please select [Enabled]. Configuration options: [Enabled] and [Disabled]. The default value is [Enabled].

3.6.1 CSM Parameters

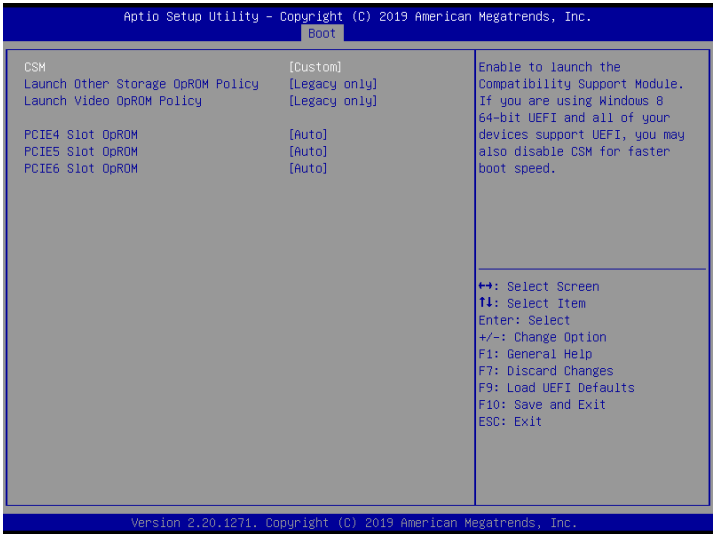

CSM

Enable to launch the Compatibility Support Module. Please do not disable unless you're running a WHCK test. If you are using Windows Server 2012 R2 or later versions 64-bit UEFI and all of your devices support UEFI, you may also disable CSM for faster boot speed.

Launch Other Storage OpROM Policy

Select UEFI only to run those that support UEFI option ROM only. Select Legacy only to run those that support legacy option ROM only. Select Do not launch to not execute both legacy and UEFI option ROM.

Launch Video OpROM Policy

Select UEFI only to run those that support UEFI option ROM only. Select Legacy only to run those that support legacy option ROM only. Select Do not launch to not execute both legacy and UEFI option ROM.

PCIE4 Slot OpROM

Use this item to select slot storage and Network Option ROM policy. In Auto option, the default is Disabled with NVMe device, but it is Legacy with other devices. (This item can't select Video Option ROM policy.)

PCIE5 Slot OpROM

Use this item to select slot storage and Network Option ROM policy. In Auto option, the default is Disabled with NVMe device, but it is Legacy with other devices. (This item can't select Video Option ROM policy.)

PCIE6 Slot OpROM

Use this item to select slot storage and Network Option ROM policy. In Auto option, the default is Disabled with NVMe device, but it is Legacy with other devices. (This item can't select Video Option ROM policy.)

3.7 Exit Screen

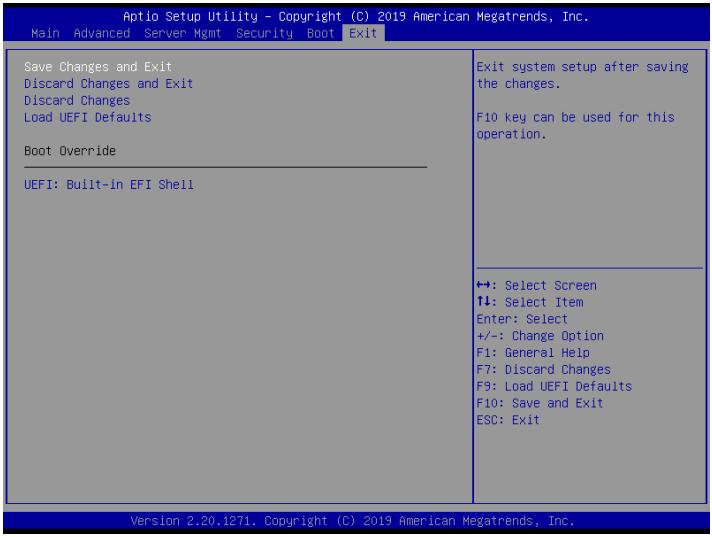

Save Changes and Exit

When you select this option, the following message “Save configuration changes and exit setup?” will pop-out. Press <F10> key or select [Yes] to save the changes and exit the UEFI SETUP UTILITY.

Discard Changes and Exit

When you select this option, the following message “Discard changes and exit setup?” will pop-out. Press <ESC> key or select [Yes] to exit the UEFI SETUP UTILITY without saving any changes.

Discard Changes

When you select this option, the following message “Discard changes?” will pop-out. Press <F7> key or select [Yes] to discard all changes.

Load UEFI Defaults

Load UEFI default values for all the setup questions. F9 key can be used for this operation.

Boot Override

These items displays the available devices. Select an item to start booting from the selected device.

Chapter 4 Software Support

4.1 Install Operating System

This motherboard supports various Microsoft® Windows® / Linux compliant. Because motherboard settings and hardware options vary, use the setup procedures in this chapter for general reference only. Refer to your OS documentation for more information.

**Please download the Intel® SATA Floppy Image driver from the ASRock Rack's website (www.asrockrack.com) to your USB drive or simply install the SATA driver from the Support CD while installing OS in SATA RAID mode.*

4.2 Support CD Information

The Support CD that came with the motherboard contains necessary drivers and useful utilities that enhance the motherboard's features.

4.2.1 Running The Support CD

To begin using the support CD, insert the CD into your CD-ROM drive. The CD automatically displays the Main Menu if "AUTORUN" is enabled in your computer. If the Main Menu does not appear automatically, locate and double click on the file "ASRSetup.exe" from the root folder in the Support CD to display the menu.

4.2.2 Drivers Menu

The Drivers Menu shows the available device's drivers if the system detects installed devices. Please install the necessary drivers to activate the devices.

4.2.3 Utilities Menu

The Utilities Menu shows the application softwares that the motherboard supports. Click on a specific item then follow the installation wizard to install it.

4.2.4 Contact Information

If you need to contact ASRock Rack or want to know more about ASRock Rack, welcome to visit ASRock Rack's website at http://www.ASRockRack.com; or you may contact your dealer for further information.

Chapter 5 Troubleshooting

5.1 Troubleshooting Procedures

Follow the procedures below to troubleshoot your system.

Always unplug the power cord before adding, removing or changing any hardware components. Failure to do so may cause physical injuries to you and damages to motherboard components.

1. Disconnect the power cable and check whether the PWR LED is off.
2. Unplug all cables, connectors and remove all add-on cards from the motherboard. Make sure that the jumpers are set to default settings.
3. Confirm that there are no short circuits between the motherboard and the chassis.
4. Install a CPU and fan on the motherboard, then connect the chassis speaker and power LED.

If there is no power...

1. Confirm that there are no short circuits between the motherboard and the chassis.
2. Make sure that the jumpers are set to default settings.
3. Check the settings of the 115V/230V switch on the power supply.
4. Verify if the battery on the motherboard provides ~3VDC. Install a new battery if it does not.

If there is no video...

1. Try replugging the monitor cables and power cord.
2. Check for memory errors.

If there are memory errors...

1. Verify that the DIMM modules are properly seated in the slots.
2. Use recommended DDR4 ECC/UDIMMs.
3. If you have installed more than one DIMM modules, they should be identical with the same brand, speed, size and chip-type.
4. Try inserting different DIMM modules into different slots to identify faulty ones.
5. Check the settings of the 115V/230V switch on the power supply.

Unable to save system setup configurations...

1. Verify if the battery on the motherboard provides ~3VDC. Install a new battery if it does not.
2. Confirm whether your power supply provides adaquate and stable power.

Other problems...

1. Try searching keywords related to your problem on ASRock Rack's FAQ page: http://www.asrockrack.com/support

5.2 Technical Support Procedures

If you have tried the troubleshooting procedures mentioned above and the problems are still unsolved, please contact ASRock Rack's technical support with the following information:

1. Your contact information
2. Model name, BIOS version and problem type.
3. System configuration.
4. Problem description.

You may contact ASRock Rack's technical support at:
http://www.asrockrack.com/support/tsd.asp

5.3 Returning Merchandise for Service

For warranty service, the receipt or a copy of your invoice marked with the date of purchase is required. By calling your vendor or going to our RMA website (http://event.asrockrack.com/tsd.asp) you may obtain a Returned Merchandise Authorization (RMA) number.
The RMA number should be displayed on the outside of the shipping carton which is mailed prepaid or hand-carried when you return the motherboard to the manufacturer. Shipping and handling charges will be applied for all orders that must be mailed when service is complete.

This warranty does not cover damages incurred in shipping or from failure due to alteration, misuse, abuse or improper maintenance of products.

Contact your distributor first for any product related problems during the warranty period.