PFW 6851

Display Wall Mount, Turn & Tilt 80 kg

INSTALLATION INSTRUCTIONS

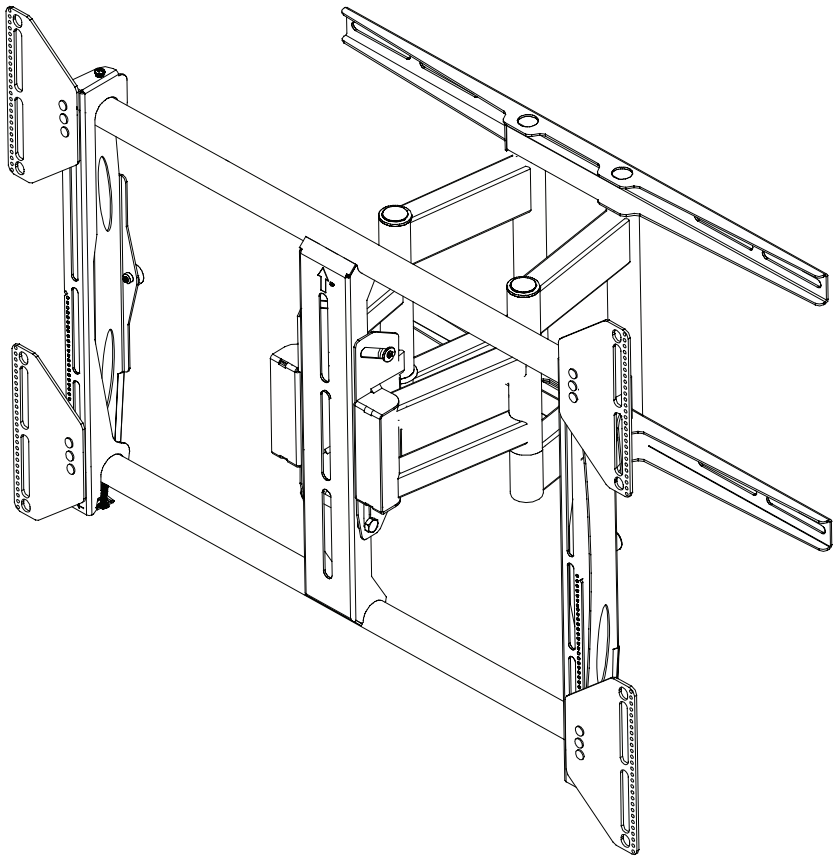

9531-007-Z00-01

Table of Contents

Warning Statements 2
Parts List 3
Installation Tools 3
Wood Stud Installation 5
Concrete Surface Installation 7
Determining the Mounting Hardware 8
Universal Spacer Installation 9
Griplate™ Installation 9
Mounting Bracket Installation 10
Adapter Plate Installation (optional) 11
Attaching the Flat Panel to the Wall 12
Securing and Leveling the Flat Panel 12
Adjusting the Flat Panel Tilt 13
Plastic Channel Cover Installation 13
Technical Specifications 14
Warranty 15

Warning Statements

PRIOR TO THE INSTALLATION OF THIS PRODUCT, THE INSTALLATION INSTRUCTIONS SHOULD BE READ AND COMPLETELY UNDERSTOOD. THE INSTALLATION INSTRUCTIONS MUST BE READ TO PREVENT PERSONAL INJURY AND PROPERTY DAMAGE. KEEP THESE INSTALLATION INSTRUCTIONS IN AN EASILY ACCESSIBLE LOCATION FOR FUTURE REFERENCE.

STOP VOGEL'S DOES NOT WARRANT AGAINST DAMAGE CAUSED BY THE USE OF ANY VOGEL'S PRODUCT FOR PURPOSES OTHER THAN THOSE FOR WHICH IT WAS DESIGNED OR DAMAGE CAUSED BY UNAUTHORIZED ATTACHMENTS OR MODIFICATIONS, AND IS NOT RESPONSIBLE FOR ANY DAMAGES, CLAIMS, DEMANDS, SUITS, ACTIONS OR CAUSES OF ACTION OF WHATEVER KIND RESULTING FROM, ARISING OUT OF OR IN ANY MANNER RELATING TO ANY SUCH USE, ATTACHMENTS OR MODIFICATIONS.

STOP THE SURFACE MUST BE CAPABLE OF SUPPORTING AT LEAST FIVE TIMES THE WEIGHT OF THE FLAT PANEL. IF NOT, THE STRUCTURE MUST BE REINFORCED. THE MAXIMUM WEIGHT THAT CAN BE USED WITH THIS PRODUCT IS 79 KG. PROPER INSTALLATION PROCEDURE BY A QUALIFIED SERVICE TECHNICIAN, AS OUTLINED IN THE INSTALLATION INSTRUCTIONS, MUST BE ADHERED TO. FAILURE TO DO SO COULD RESULT IN SERIOUS PERSONAL INJURY, OR EVEN DEATH.

STOP SAFETY MEASURES MUST BE PRACTICED AT ALL TIMES DURING THE ASSEMBLY OF THIS PRODUCT. USE PROPER SAFETY GEAR AND TOOLS FOR THE ASSEMBLY PROCEDURE TO PREVENT PERSONAL INJURY.

At least two qualified people should perform the assembly procedure. Injury and/or damage can result from dropping or mishandling the flat panel.

If mounting to studs, make sure that the mounting screws are anchored into the center of the studs. Use of an edge-to-edge stud finder is recommended.

Be aware of the mounting environment. If drilling and/or cutting into the mounting surface, always make sure that there are no electrical wires in wall. Cutting/drilling into an electrical line may cause serious injury.

Make sure there are no water lines inside the wall where the mount is to be located. Cutting/drilling into a water line may cause severe water damage to the mounting surface.

This product is intended for indoor use only. Use of this product outdoors could lead to product failure and personal injury.

Do not install near sources of high heat. Do not install on a structure that is prone to vibration, movement or chance of impact

Parts List

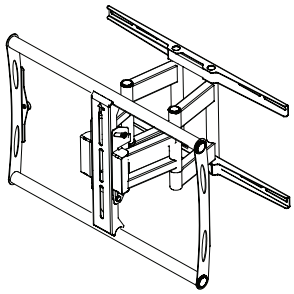

Swingout Arm (Qty 1)

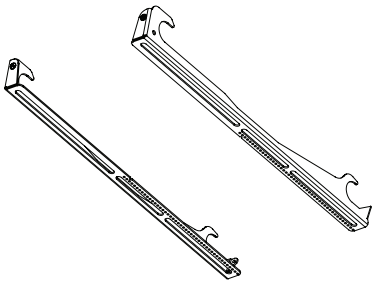

Universal Mounting Brackets (Qty 2)

Extension Adapter Hardware Pack

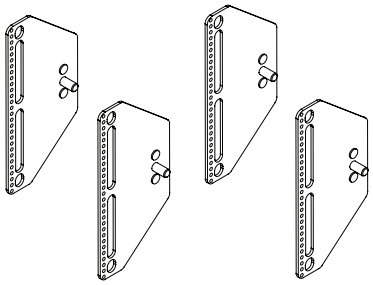

Extension Adapters (Qty 4)

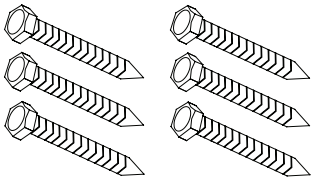

5/16” x 3” Lag Bolts (Qty 6)

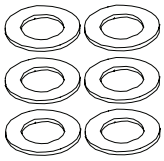

5/16” Flat Washers (Qty 6)

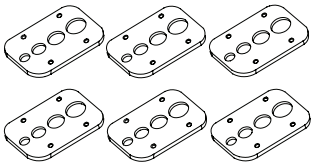

Griplate™ (Qty 6)

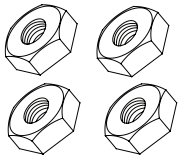

M8 Nylon Nut (Qty 4)

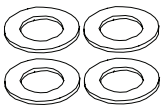

5/16” Flat Washers (Qty 4)

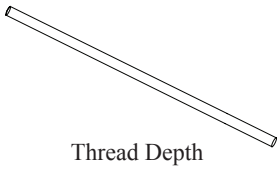

Thread Depth Indicator (Qty 1)

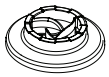

Universal Spacers (Qty 24)

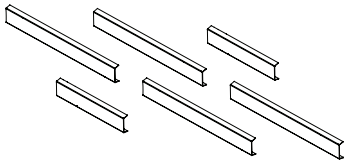

Channel Covers (Qty 6)

Installation Tools (not supplied)

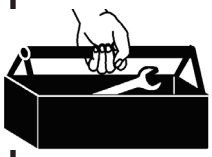

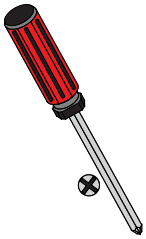

Phillips Screwdriver

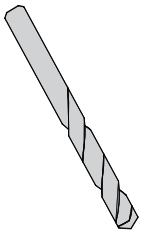

1/4” Drill Bit

Electronic Stud Finder

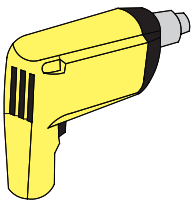

Drill

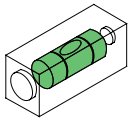

Level

1/2” Socket and Socket Wrench

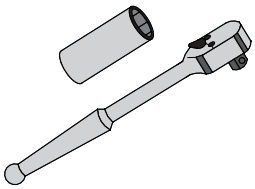

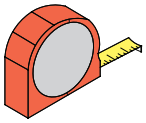

Tape Measure

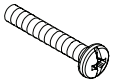
M4 x 30mm (Qty 6)

M4 x 25mm (Qty 6)

M4 x 16mm (Qty 6)

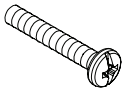
M5 x 30mm (Qty 6)

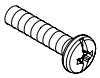
M5 x 25mm (Qty 6)

M5 x 16mm (Qty 6)

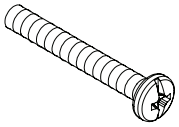
M6 x 45mm (Qty 6)

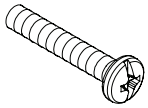
M6 x 30mm (Qty 6)

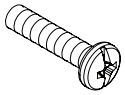
M6 x 25mm (Qty 6)

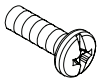
M6 x 16mm (Qty 6)

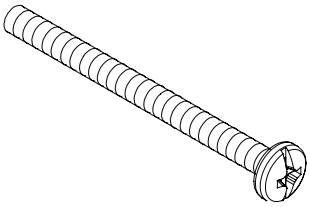
M8 x 70mm (Qty 4)

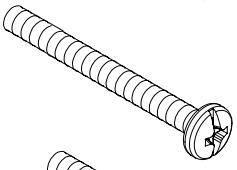
M8 x 45mm (Qty 6)

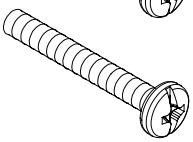
M8 x 30mm (Qty 6)

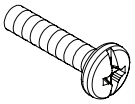
M8 x 25mm (Qty 6)

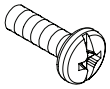
M8 x 16mm (Qty 6)

Wood Stud Installation

WARNING THE FOLLOWING STEPS MUST BE PERFORMED BY TWO PEOPLE.

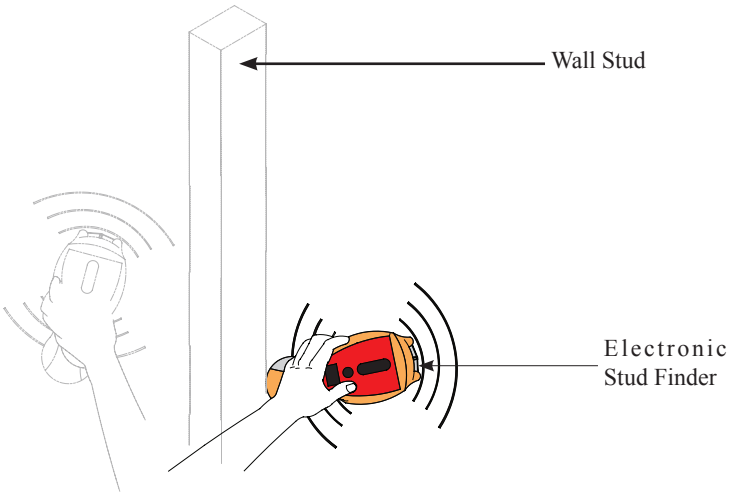

Step 1. Determine the desired viewing location. Use a stud finder to locate two studs closest to the viewing location.

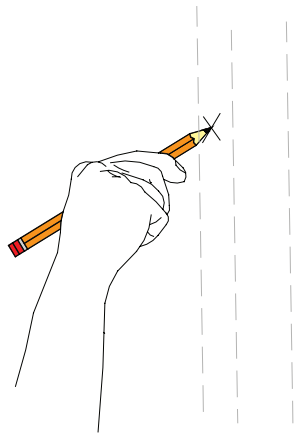

Step 2. Once the studs have been located, use a pencil to mark the center of each stud.

NOTE A minimum of two (2) wall studs must be used in the installation of this product.

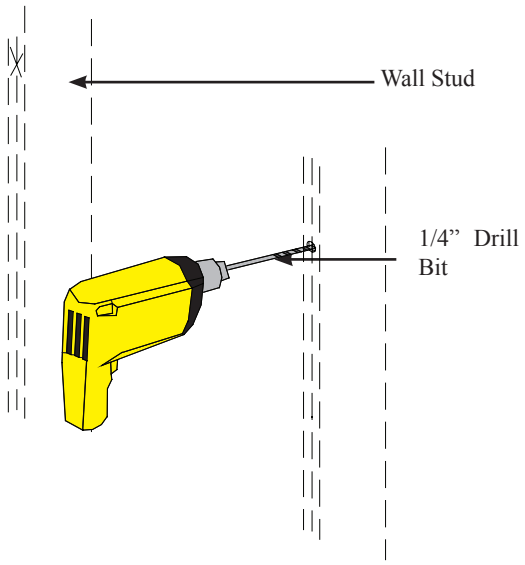

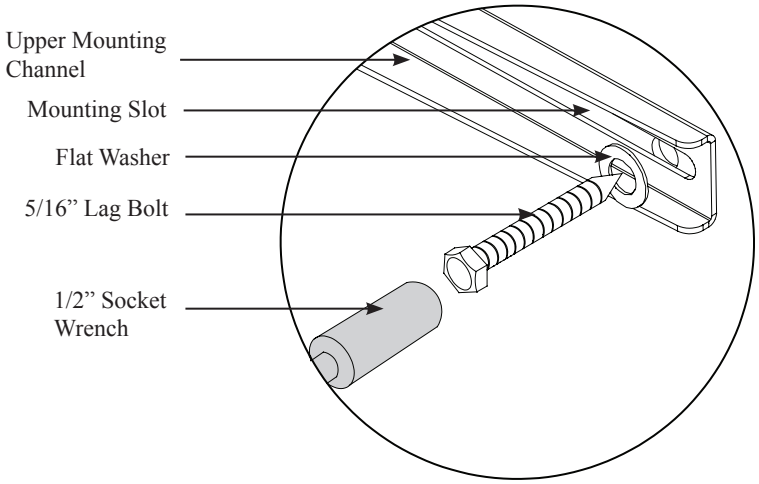

NOTE When determining viewing height, the center of the TV should be at eye level while sitting in an upright position. When using the flat panel as room decoration, raise it to the point where the bottom of the screen is at eye level while sitting and the top is eye level when standing.

Step 3. Drill a pilot hole at the marked location using a power drill and a 1/4" drill bit.

WARNING Only use 1/4" drill bit when drilling the pilot holes.

NOTE Two people must perform the installation. One person must hold the mount while the other person levels the mount. The mount must remain in place while the mounting hardware is tightened.

Step 4. Level the mount.
Step 5. Align the mounting slot with the drilled hole.
Step 6. Insert and tighten one (1) 5/16" x 3" lag bolt and flat washer. Tighten using a 1/2" socket wrench. Do not completely tighten the lag bolt at this time.

WARNING Do NOT over-tighten lag bolts when attaching the mount to the wall. Improper installation may result in personal injury or damage to property.

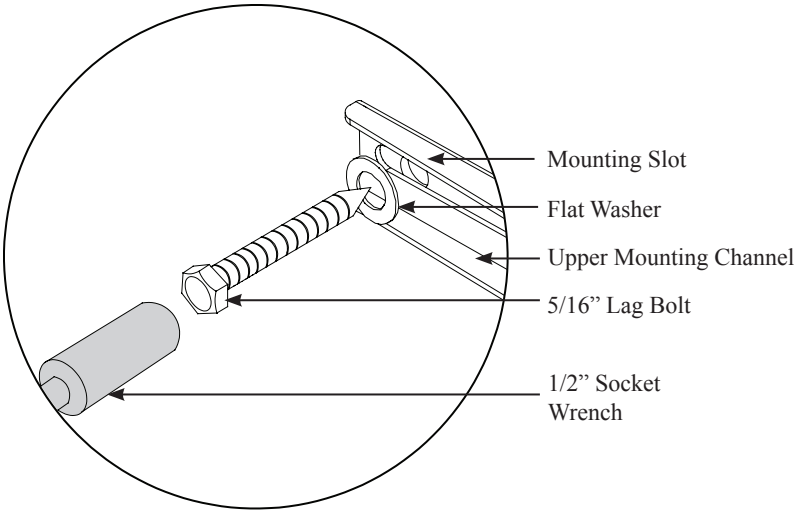

NOTE Before drilling the second mounting hole, re-level the mount.

Step 7. Drill a pilot hole at the marked location using a power drill and a 1/4” drill bit.

Step 8. Align the mounting slot with the drilled hole.

Step 9. Insert and tighten one (1) 5/16” x 3” lag bolt and flat washer. Tighten using a 1/2” socket wrench. Do not completely tighten the lag bolt at this time.

Step 10. Re-level the PFW 6851.

Step 11. Using a 1/2” socket wrench, completely tighten the two (2) upper lag bolts.

WARNING Do NOT over-tighten lag bolts when attaching the mount to the wall. Improper installation may result in personal injury or damage to property.

NOTE A minimum of two (2) wall studs must be used in the installation of this product.

Repeat these steps to secure the lower mounting channel to the wall.

NOTE There will be a total of four (4) mounting points (2 for the upper mounting channel and 2 for the lower mounting channel).

NOTE If the studs are 12” (304.8mm) apart, use three 3” (76.2mm) lag bolts for the upper mounting channel and three 3” (76.2mm) lag bolts for the lower mounting channel. If the studs are 16”(406.4mm), 18” (457.2mm) or 24”(609.6mm) apart, use two 3” lag bolts for the upper mounting channel and two 3” lag bolts for the lower mounting channel.

Concrete Surface Installation

WARNING THE FOLLOWING STEPS MUST BE PERFORMED BY TWO PEOPLE.

NOTE If concrete wedge anchors are not used (as described in these installation instructions) and you decide on other mounting hardware, please follow the installation instructions as provided with that hardware.

Step 1. Determine the desired viewing location.
Step 2. Place the mount into position against the wall and level the mount.
Step 3. Mark off four holes to be used for securing the mount.

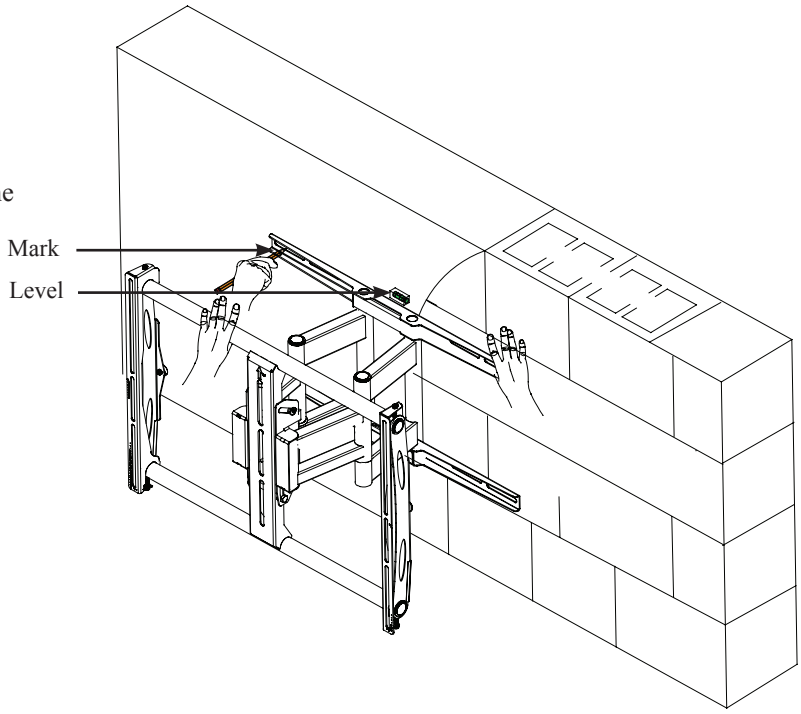

NOTE When determining viewing height, the center of the TV should be at eye level while sitting in an upright position. When using the flat panel as room decoration, raise it to the point where the bottom of the screen is at eye level while sitting and the top is eye level when standing.

Step 4. Next, drill holes using a masonry bit (commercially available) for your anchors.
Step 5. Insert a commercially available concrete anchor into each hole.
Step 6. Use a hammer and lightly tap each anchor into place so that only the threaded shaft of the concrete wedge anchor is protruding from the wall.

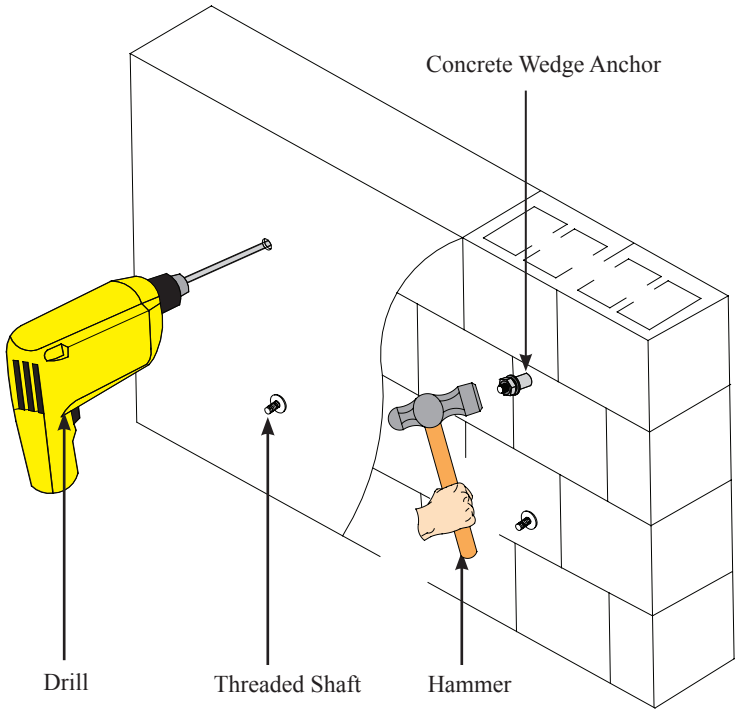

Step 7. Once all of the anchors are in place, move the wall bracket into position.

Step 8. Attach the nut onto the threaded shaft that is protruding from the wall.

Step 9. Re-level the wall plate and tighten all concrete wedge anchor nuts at this time.

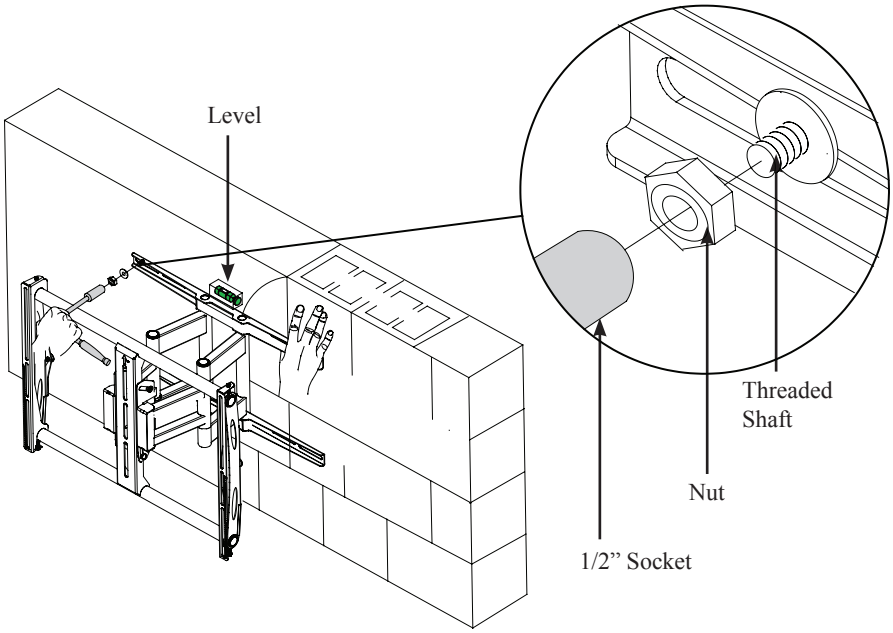

NOTE If concrete wedge anchors are not used (as described in these installation instructions) and you decide on other mounting hardware, please follow the installation instructions as provided with that hardware.

WARNING Do NOT over-tighten the concrete wedge anchors.

Determining the Mounting Hardware

1. Insert a small straw or toothpick into the threaded inserts found on the back of the flat panel.
2. Use a pencil to mark the depth of the threaded insert on the small straw or toothpick.
3. Mark the straw or toothpick 1/8" above the depth of the threaded insert, as shown in Figure 1.
4. Insert the small straw or toothpick into the remaining threaded inserts to compare and verify their depth using the straw or toothpick's 1/8" allowance mark.
5. Locate the correct diameter screw for the threaded insert.

   If the screw you selected is longer than the 1/8" allowance mark on the small straw or toothpick, as shown in Figure 2 and Figure 3, do not use this screw. The screw length must not bypass the mark.

6. Test each size of the screws provided.

   The correct screws should thread easily into the mounting point and not pull out when tension is applied.

You must account for the bracket, spacers and Griplate™ depths when using the Thread Depth Indicator to measure the thread depth of your flat panel.

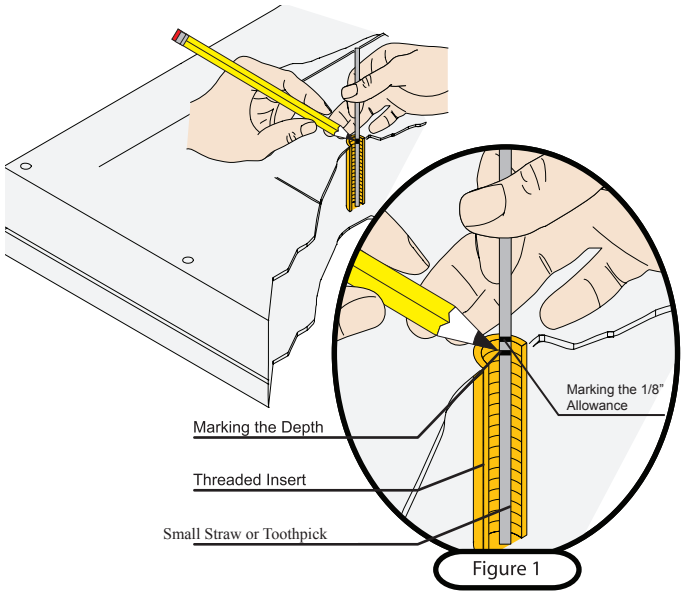

Figure 1

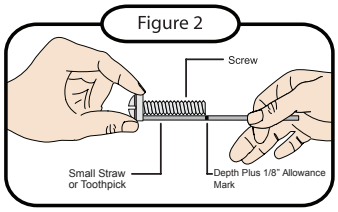

Figure 2

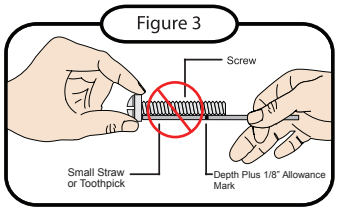

Figure 3

Universal Spacers Installation (optional)

NOTE If your flat panel has uneven mounting points, or recessed mounting points, please use the provided universal spacers.

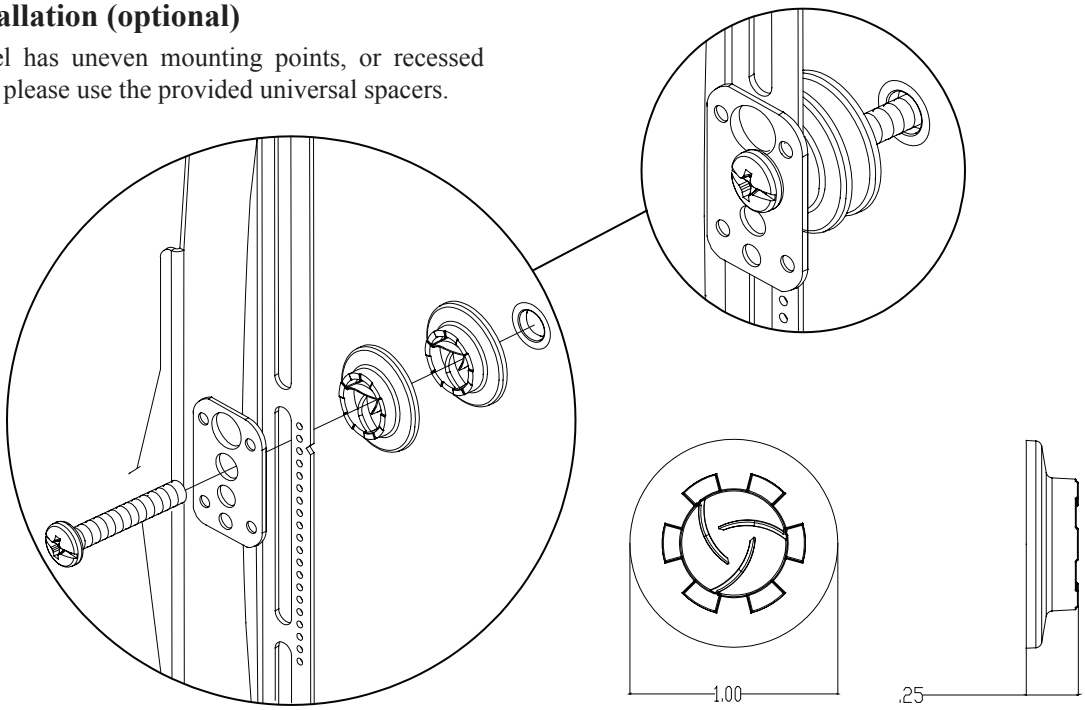

The universal spacer may be stacked six (6) high, for a total stacking height of 1-1/2”. The universal spacers must be stacked in the direction shown above. The universal spacers must be placed between the mounting bracket and the flat panel.
The universal spacer will fit M4, M5, M6 and M8 screws sizes.

Griplate™ Installation

The Griplates™ have M4, M5, M6 and M8 hole patterns to fit the hardware that your flat panel requires.

EXAMPLE: If your flat panel uses M8 screws, use the M8 mounting points.

Pre-install the mounting screws, universal spacers and Griplates™. Once mounted, push down to eliminate movement from the bracket, then tighten the rest of the hardware. Repeat this process for the installation of the remaining mounting bracket.

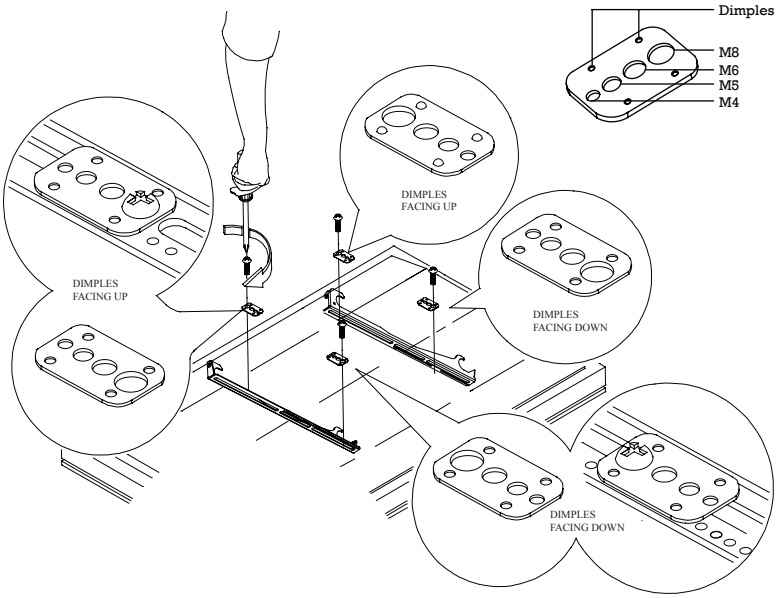

Mounting Bracket Installation

This kit provides a variety of screws with different lengths and diameters to accommodate most flat panels.

NOTE The number and location of mounting points will vary between manufacturers.

WARNING Do NOT over-tighten the screws.

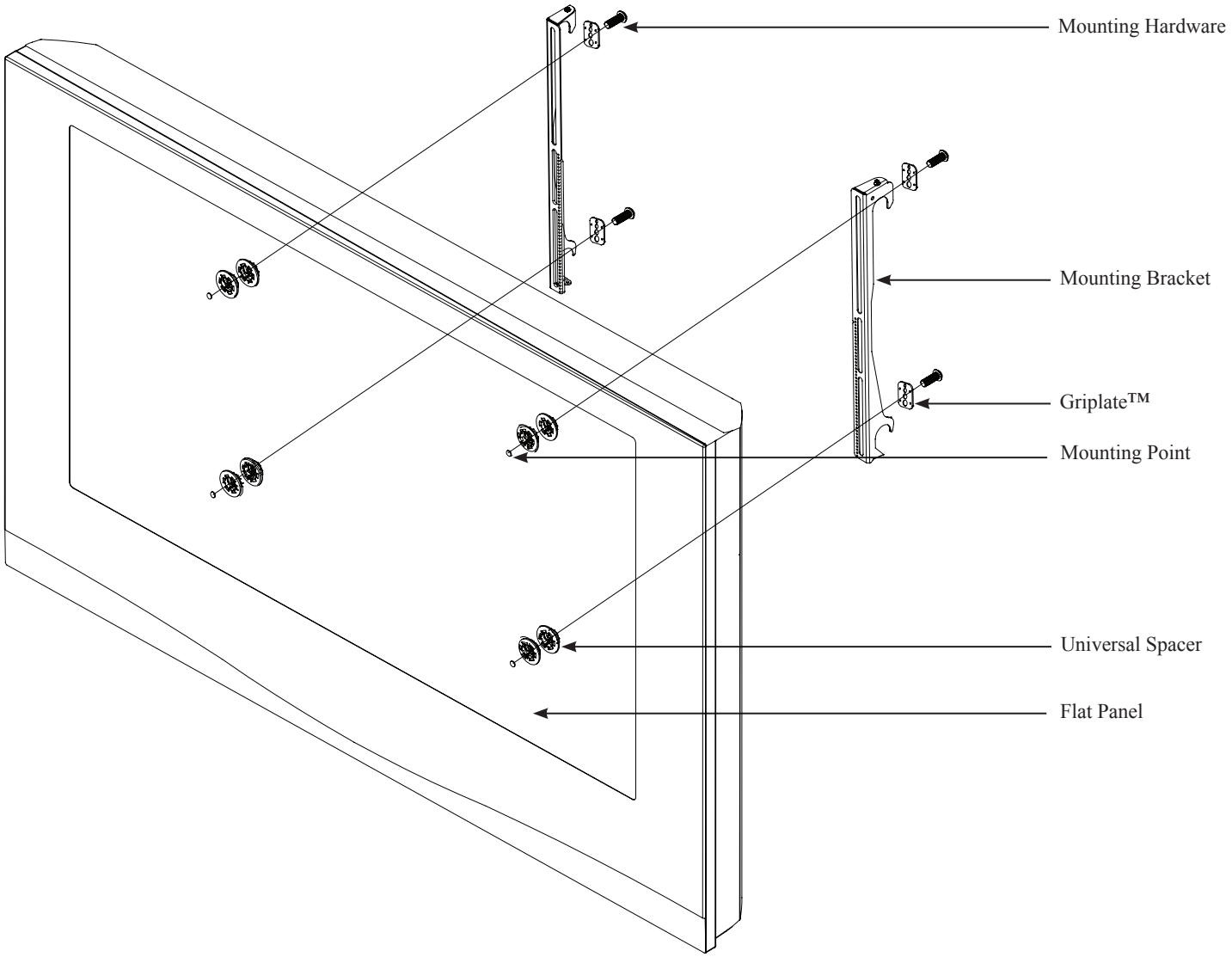

Step 1. Place your flat panel screen down on a soft, flat surface and locate the threaded mounting points that are located on the back of the flat panel.

Step 2. Determine which screw is the correct length (please see “Determining the Mounting Hardware” section).

Step 3. Attach each bracket to the flat panel by aligning the holes on each bracket with the threaded inserts on the back of your flat panel, insert the screws through both and turn clockwise until they are fully inserted.

Adapter Plate Installation (optional)

NOTE The adapter plates can be used with mounting patterns from 200mm x 200mm to 650mm x 840mm.

NOTE In the event that your flat panel has recessed or an uneven mounting surface, universal spacers may be stacked to achieve proper spacing. Select the amount of universal spacer (s) that is closest in depth to keep your adapter plate as close to the flat panel as possible. The universal spacer must be secured between the flat panel and the adapter plates.

WARNING Do NOT over-tighten the screws.

Step 1. Determine if your flat panel will need the adapter plates.

Step 2. Locate the mounting points on the back of the flat panel.

Step 3. Using a screwdriver, insert and tighten the mounting hardware and adapter plates to the back of the flat panel. Do not over-tighten the screws.

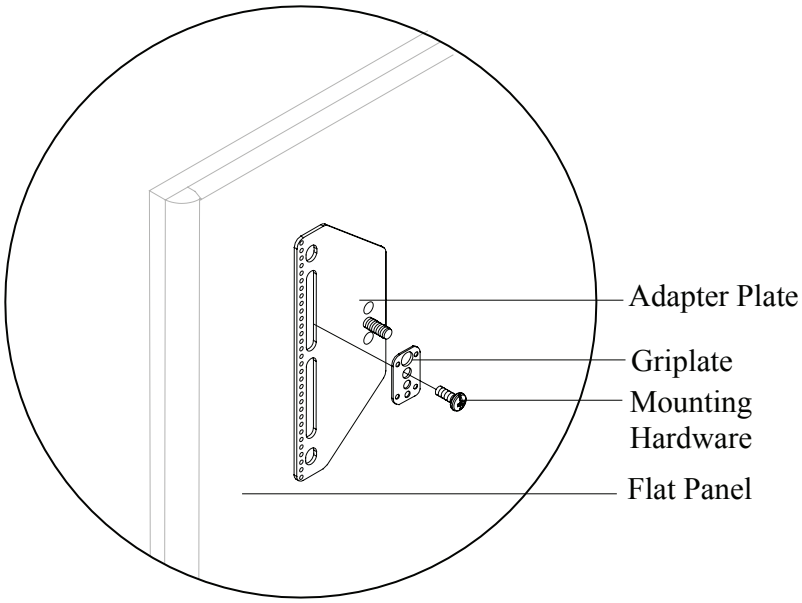

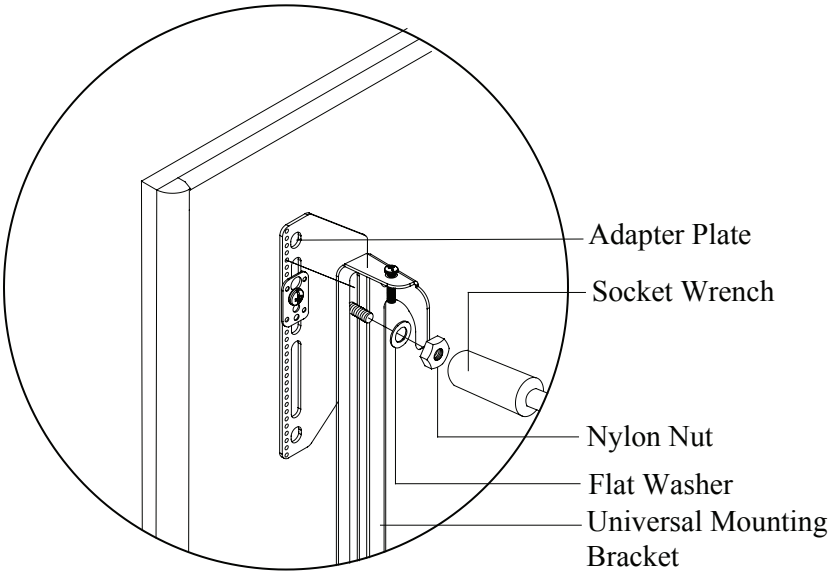

Step 4. Place the universal mounting brackets over the threaded mounting studs that are on the adapter plate.

Step 5. Place one (1) 5/16” flat washer onto each threaded mounting stud.

Step 6. Thread one (1) M8 nylon nut onto each threaded mounting stud.

NOTE Before tightening the nylon nut, be sure that both universal mounting brackets are level and aligned with each other. If they are not aligned and level, the flat panel will not sit properly when mounted to the PFW 6851.

Step 7. Once the universal mounting brackets are level, use a 1/2” socket and socket wrench to tighten the M8 nylon nuts. Do not over-tighten the screws.

Attaching the Flat Panel to the Wall Plate

CAUTION Two people are required for this step.

WARNING Do not release the flat panel until verifying the connection between the universal mounting brackets and the upper and lower mounting bars.

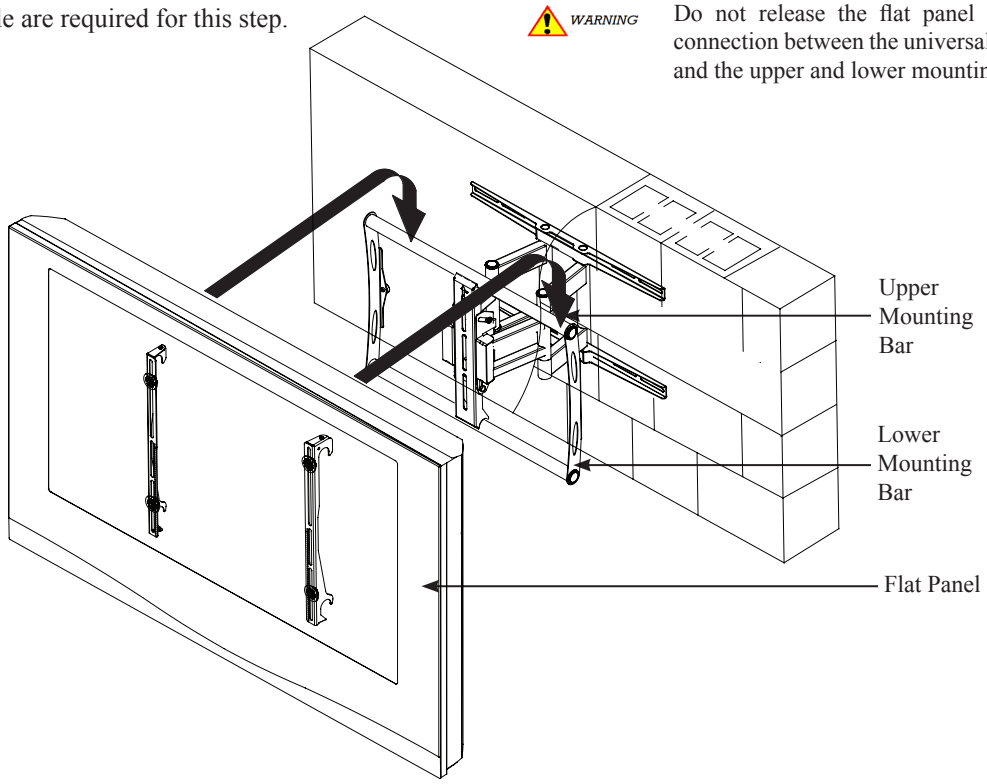

Step 1. Place the universal brackets and the flat panel over and onto the upper and lower mounting bars of the PFW 6851 and lower it down. Do not release the flat panel until the flat panel is resting securely on the upper and lower mounting bars.

Securing and Leveling the Flat Panel

NOTE In the event that the flat panel is tilted too far to one side, the leveling screws will allow you to compensate for this tilt by simply adjusting the screws with a screwdriver (see illustration to the right for a clearer view).

Step 1. Use a screwdriver to adjust the two (2) M6 x 30 leveling screws, located on the top of the mounting brackets.

Step 2. Once the flat panel is level, use a screwdriver to tighten the two (2) M6 x 30 locking screws, located on the bottom of the mounting brackets. Do not over-tighten these screws.

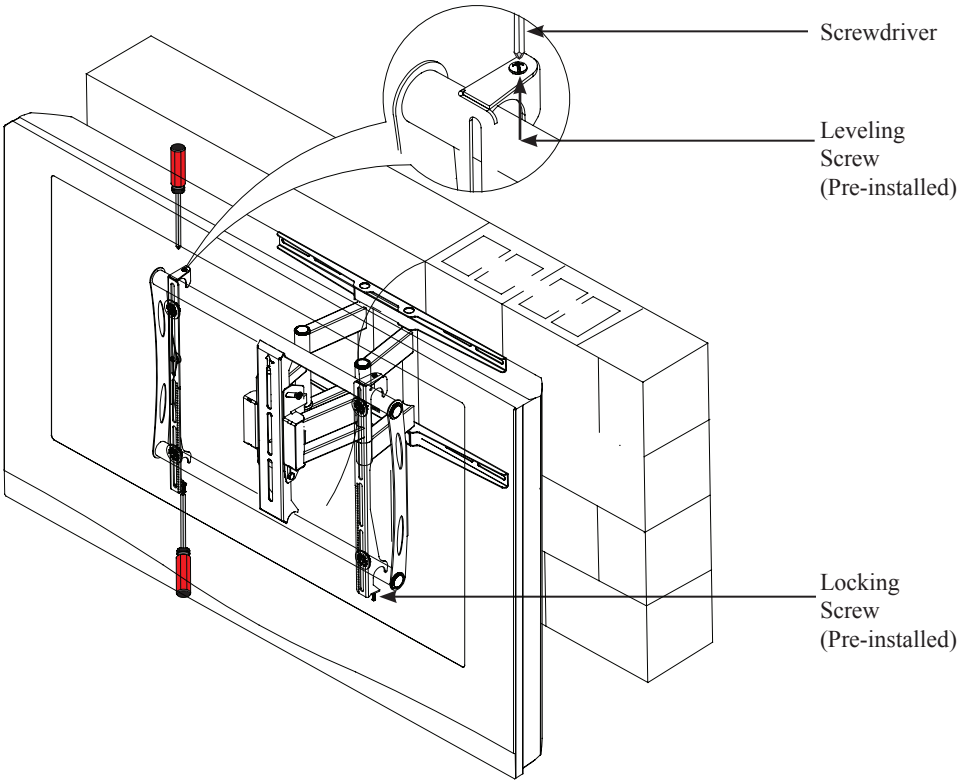

Adjusting the Flat Panel Tilt

NOTE TO ADJUST THE TILT TENSION OF THE PFW 6851, LOOSEN THE TENSION BOLTS LOCATED ON THE BOTTOM RIGHT AND LEFT SIDE OF THE MAIN ARM ASSEMBLY. RE-TIGHTEN THESE BOLTS TO ACHIEVE YOUR DESIRED TENSION.

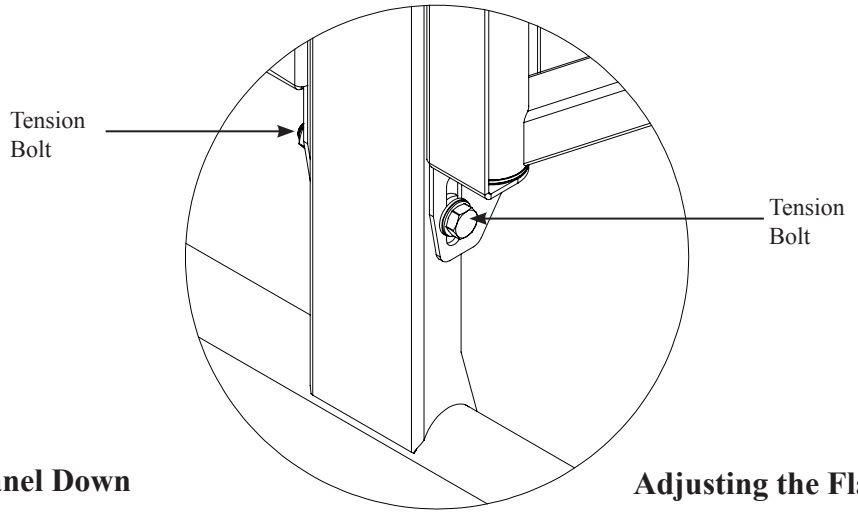

Adjusting the Flat Panel Down

Step 1. Place one hand at the center top edge of the flat panel.

Step 2. Place the other hand on the center bottom edge of the flat panel.

Step 3. Using the upper hand, gently pull the top of the flat panel away from the wall while the lower hand gently pushes the bottom of the flat panel towards the wall.

Adjusting the Flat Panel Up

Step 1. Place one hand at the center top edge of the flat panel.

Step 2. Place the other hand on the center bottom edge of the flat panel.

Step 3. Using the upper hand, gently push the top of the flat panel towards the wall while the lower hand gently pulls the bottom of the flat panel away from the wall.

Plastic Channel Cover Installation

Step 1. Place the plastic channel covers over the mounting plate (2 side covers and 1 center cover).

Step 2. Gently push each cover into place, covering the mounting slots of the mounting plate.

NOTE Repeat steps 1 and 2 for the installation of the lower plastic channel covers.

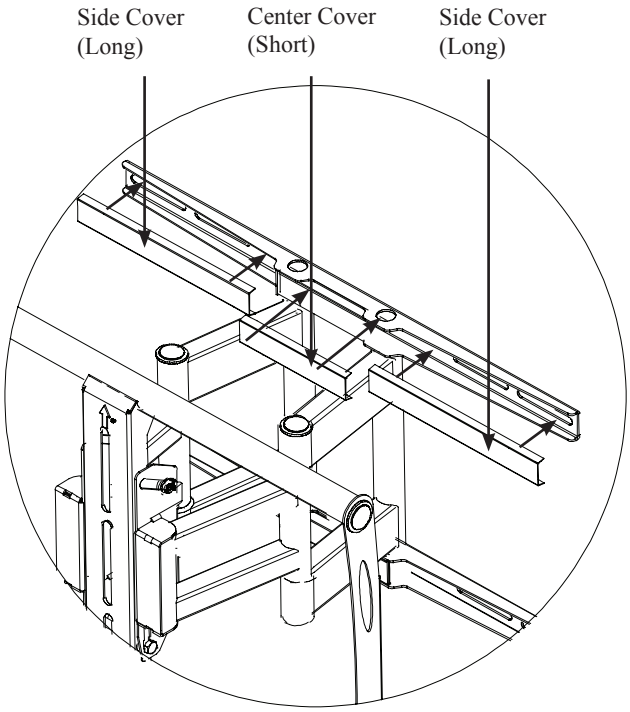

Technical Specification
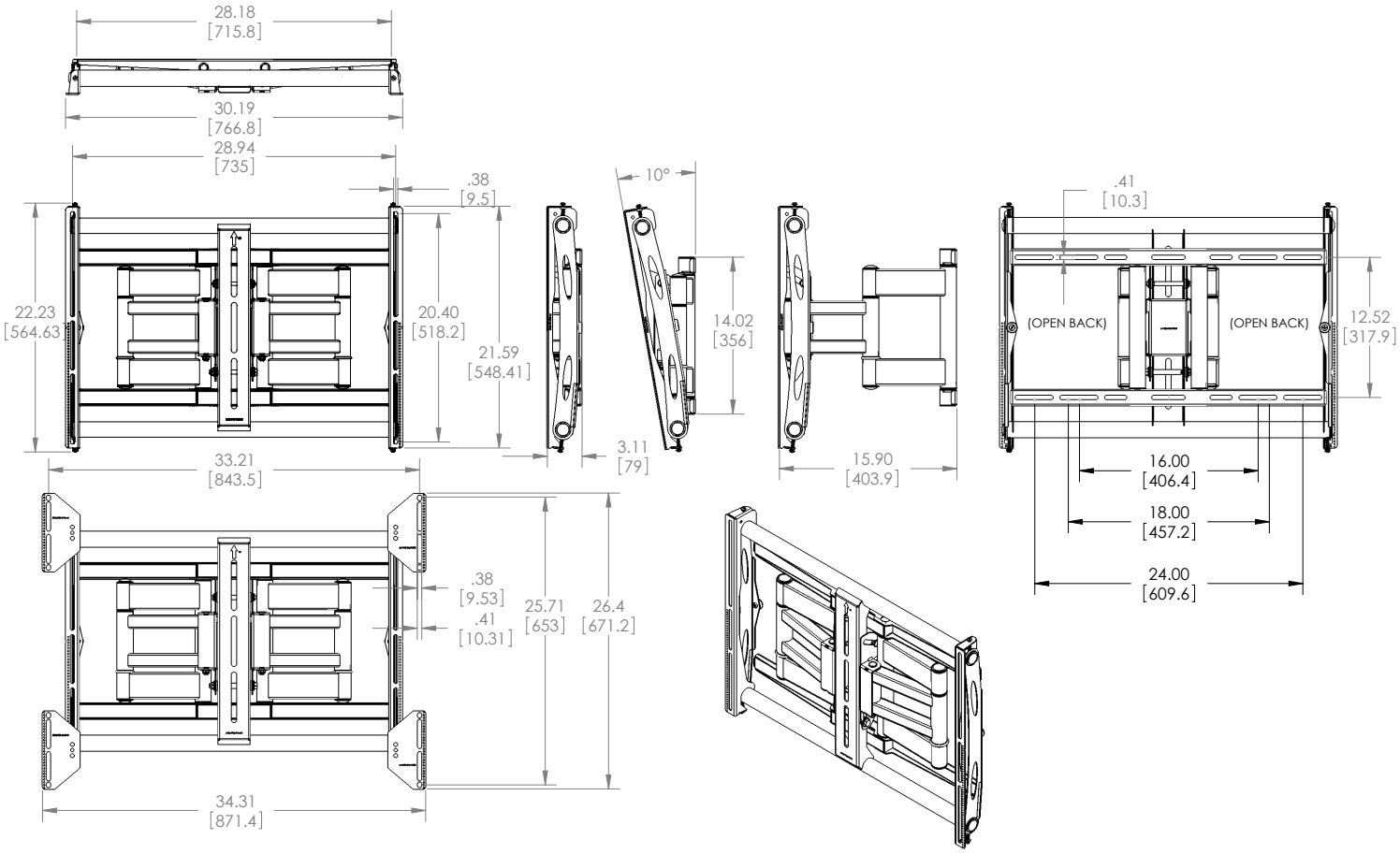
All measurements are in inches(mm).