OPEN Industry Standard, Flexible Architecture

GREEN Less Heat, Less Power Consumption

STABLE Robust Design, Quality Parts

Stable and
Reliable Solution

Server/Workstation
Motherboard

B550D4-4L

User Manual

English

Version 1.0
Published March 2021
Copyright©2021 ASRock Rack Inc. All rights reserved.

Copyright Notice:

No part of this documentation may be reproduced, transcribed, transmitted, or translated in any language, in any form or by any means, except duplication of documentation by the purchaser for backup purpose, without written consent of ASRock Rack Inc.

Products and corporate names appearing in this documentation may or may not be registered trademarks or copyrights of their respective companies, and are used only for identification or explanation and to the owners' benefit, without intent to infringe.

Disclaimer:

Specifications and information contained in this documentation are furnished for informational use only and subject to change without notice, and should not be constructed as a commitment by ASRock Rack. ASRock Rack assumes no responsibility for any errors or omissions that may appear in this documentation.

With respect to the contents of this documentation, ASRock Rack does not provide warranty of any kind, either expressed or implied, including but not limited to the implied warranties or conditions of merchantability or fitness for a particular purpose.

In no event shall ASRock Rack, its directors, officers, employees, or agents be liable for any indirect, special, incidental, or consequential damages (including damages for loss of profits, loss of business, loss of data, interruption of business and the like), even if ASRock Rack has been advised of the possibility of such damages arising from any defect or error in the documentation or product.

This device complies with Part 15 of the FCC Rules. Operation is subject to the following two conditions:
(1) this device may not cause harmful interference, and
(2) this device must accept any interference received, including interference that may cause undesired operation.

CALIFORNIA, USA ONLY

The Lithium battery adopted on this motherboard contains Perchlorate, a toxic substance controlled in Perchlorate Best Management Practices (BMP) regulations passed by the California Legislature. When you discard the Lithium battery in California, USA, please follow the related regulations in advance.
"Perchlorate Material-special handling may apply, see www.dtsc.ca.gov/hazardouswaste/perchlorate"

ASRock Rack's Website: www.ASRockRack.com

Contact Information

If you need to contact ASRock Rack or want to know more about ASRock Rack, you're welcome to visit ASRock Rack's website at www.ASRockRack.com; or you may contact your dealer for further information.

ASRock Rack Incorporation

6F., No.37, Sec. 2, Jhongyang S. Rd., Beitou District,

Taipei City 112, Taiwan (R.O.C.)

The terms HDMI™ and HDMI High-Definition Multimedia Interface, and the HDMI logo are trademarks or registered trademarks of HDMI Licensing LLC in the United States and other countries.

HIGH-DEFINITION MULTIMEDIA INTERFACE

Contents

Chapter 1 Introduction **1**

1.1 Package Contents 1

1.2 Specifications 2

1.3 Unique Features 5

1.4 Motherboard Layout 6

1.5 Onboard LED Indicators 9

1.6 I/O Panel 11

1.7 Block Diagram 13

Chapter 2 Installation **14**

2.1 Screw Holes 14

2.2 Pre-installation Precautions 14

2.3 Installing the CPU 15

2.4 Installing the CPU Fan and Heatsink 17

2.5 Installing Memory Modules (DIMM) 20

2.6 Expansion Slots (PCI Express Slots) 22

2.7 Onboard Headers and Connectors 23

2.8 Dr. Debug 29

2.9 Unit Identification purpose LED/Switch 35

2.10 Driver Installation Guide 35

2.11 M.2_SSD (NGFF) Module Installation Guide 36

Chapter 3 UEFI Setup Utility **38**

3.1 Introduction 38

3.1.1 UEFI Menu Bar 38

3.1.2 Navigation Keys 39
3.2 Main Screen 40
3.3 Advanced Screen 41
3.3.1 CPU Configuration 42
3.3.2 Chipset Configuration 43
3.3.3 Storage Configuration 44
3.3.4 ACPI Configuration 45
3.3.5 USB Configuration 46
3.3.6 Super IO Configuration 47
3.3.7 Serial Port Console Redirection 49
3.3.8 H/W Monitor 52
3.3.9 RAM Disk Configuration 53
3.3.10 Tls Auth Configuration 54
3.3.11 AMD PBS 55
3.3.12 AMD Overclocking 58
3.3.13 AMD CBS 59
3.3.14 Instant Flash 60
3.4 Server Mgmt 61
3.4.1 System Event Log 62
3.4.2 BMC Network Configuration 63
3.4.3 BMC Tools 65
3.4 Security 66
3.4.1 Key Management 67
3.5 Boot Screen 70

3.5.1 CSM Parameters 72

3.6 Exit Screen 73

Chapter 4 Software Support 74

4.1 Install Operating System 74

4.2 Support CD Information 74

4.2.1 Running The Support CD 74

4.2.2 Drivers Menu 74

4.2.3 Utilities Menu 74

4.2.4 Contact Information 74

Chapter 5 Troubleshooting 75

5.1 Troubleshooting Procedures 75

5.2 Technical Support Procedures 77

5.3 Returning Merchandise for Service 77

Chapter 1 Introduction

Thank you for purchasing ASRock Rack ***B550D4-4L*** motherboard, a reliable motherboard produced under ASRock Rack's consistently stringent quality control. It delivers excellent performance with robust design conforming to ASRock Rack's commitment to quality and endurance.

In this manual, chapter 1 and 2 contains introduction of the motherboard and step-by-step guide to the hardware installation. Chapter 3 and 4 contains the configuration guide to BIOS setup and information of the Support CD.

Because the motherboard specifications and the BIOS software might be updated, the content of this manual will be subject to change without notice. In case any modifications of this manual occur, the updated version will be available on ASRock Rack website without further notice. You may find the latest memory and CPU support lists on ASRock Rack website as well. ASRock Rack's Website: www.ASRockRack.com

If you require technical support related to this motherboard, please visit our website for specific information about the model you are using.
http://www.asrockrack.com/support/

1.1 Package Contents

- ASRock Rack B550D4-4L Motherboard
  (ATX Form Factor: 9.6-in x 12-in, 24.4 cm x 30.5 cm)
- Quick Installation Guide
- 1 x I/O Shield
- 1 x Screw for M.2 Socket

If any items are missing or appear damaged, contact your authorized dealer.

1.2 Specifications

B550D4-4L	
MB Physical Status	
Form Factor	ATX
Dimension	12"x9.6" (30.5 cm x 24.4 cm)
Processor System	
CPU	AMD Ryzen™ 5000 Series Desktop Processors AMD Ryzen™ 4000 G-Series Desktop Processors with Radeon™ Graphics AMD Ryzen™ PRO 4000 and 3000 Series Desktop Processors 3rd Gen AMD Ryzen™ Desktop Processors **Not compatible with AMD Ryzen™ 5 3400G and Ryzen™ 3 3200G.*
Socket	AM4 PGA 1331
Chipset	AMD B550
Thermal Design Power	105W
System Memory	
Capacity	- 4 x 288-pin DDR4 DIMM slots - Support up to 128GB DDR4 ECC/Non-ECC UDIMM
Type	- Dual Channel DDR4 memory technology - Support DDR4 ECC/Non-ECC UDIMM
DIMM Size Per DIMM	- ECC/Non-ECC UDIMM: 32GB, 16GB, 8GB
DIMM Frequency	- ECC/Non-ECC UDIMM: 3200/2933/2666/2400/2133 MHz
Voltage	1.2V
Expansion Slot	
PCIe 4.0 x 16	**Vermeer/Matisse:** PCIE6: Gen4 x16 link **Renoir:** PCIE6: Gen3 x16 link
PCIe 4.0 x 8	**Vermeer/Matisse:** PCIE4: Gen4 x4 link **Renoir:** PCIE4: Gen3 x4 link
Storage	
SATA Controller	6 x SATA3 6.0 Gb/s
RAID Support	0, 1, 10 **Not supported for SATA5 and SATA6*
M.2	1 (PCIE 3.0 x4/SATA3 (Type 2242/2280/22110)
Ethernet	
Interface	1000 /100 /10 Mbps by Intel I210-AT

English

LAN Controller	- 4 x RJ45 GLAN by Intel® I210-AT - 1 x RJ45 Dedicated IPMI LAN port - Supports Wake-On-LAN - Supports Energy Efficient Ethernet 802.3az - Supports PXE
Management	
BMC Controller	ASPEED AST2500
Graphics	
Controller	ASPEED AST2500
VRAM	DDR4 16MB
Rear Panel I/O	
VGA Port	1 x D-Sub **If the FRNT_VGA1 header is in use, there will be no signal on the rear VGA port.*
Serial port	1 x COM port
USB 3.2 Gen1 Port	2
USB 3.2 Gen2 Port	2
LAN Port	- 4 + 1 x RJ45 Gigabit Ethernet LAN port - LAN Ports with LED (ACT/LINK LED and SPEED LED)
HDMI 1.4	1 *(only supported with APU (Renoir))*
Internal Connector	
Auxiliary Panel Header	1 (includes chassis intrusion, and front LAN LED)
TPM Header	1
TPM-SPI Header	1
Fan Header	6 Fans x 6-pin
ATX Power	1 x (24-pin) + 1 x (8-pin) + 1 x (4-pin)
USB 3.2 Gen1 Header	1 (supports 2 USB 3.2 Gen1 ports)
Type A USB 3.2 Gen1 Port	1
USB 2.0 Header	1 (supports 2 USB 2.0 ports)
Thermal Sensor Header	1
Speaker(4pin)	1
Front VGA Header	1
COM Header	1
PSU SMB	1
Front LAN LED Header	1
IPMB Header	1
Smbus from BMC	1
80 debug port LED	1
Buzzer	1
OH/FanFail LED	6 (only Fan Fail LED)

System BIOS	
BIOS Type	32MB AMI UEFI Legal BIOS
BIOS Features	- Plug and Play (PnP) - ACPI 2.0 Compliance Wake Up Events - SMBIOS 2.8 Support - ASRock Rack Instant Flash
Hardware Monitor	
Temperature	- CPU/DDR temperature sensing - MB/Card side temperature sensing
Fan	- Fan Tachometer - Quiet Fan (Allow Chassis Fan Speed Auto-Adjust by CPU Temperature) - Fan Multi-Speed Control
Voltage	Voltage Monitoring: 3VSB, 5VSB, VCPU, VSOC, VCCM, APU VDDP, 1.05, PM VDDCR S5, PM VDDCR, BAT, 3V, 5V, 12V
Support OS	
OS	Microsoft® Windows®: - Windows 10 (64 bit) Linux®: - RedHat Enterprise Linux Server 8.3 (64 bit) / 7.9 (64 bit) - CentOs 8.3 (64 bit) / 7.9 (64 bit) - UBuntu 20.04.1 (64 bit) / 18.04.5 (64 bit) Hypervisor: - VMWare ESXi 7.0 U1c - vSphere 7.0 U1c ** On Windows 10, Raid mode supports UEFI Boot only.* ** Linux system does not support Raid mode.* ** Please refer to our website for the latest OS support list.*
Environment	
Temperature	Operation temperature: 10°C ~ 35°C / Non operation temperature: -40°C ~ 70°C

NOTE: Please refer to our website for the latest specifications.

This motherboard supports Wake from on Board LAN. To use this function, please make sure that the "Wake on Magic Packet from power off state" is enabled in Device Manager > Intel® Ethernet Connection > Power Management. And the "PCI Devices Power On" is enabled in UEFI SETUP UTILITY > Advanced > ACPI Configuration. After that, onboard LAN can wake up S5 under OS.

If you install Intel® LAN utility or Marvell SATA utility, this motherboard may fail Windows® Hardware Quality Lab (WHQL) certification tests. If you install the drivers only, it will pass the WHQL tests.

English

1.3 Unique Features

ASRock Rack Instant Flash is a BIOS flash utility embedded in Flash ROM. This convenient BIOS update tool allows you to update system BIOS without entering operating systems first like MS-DOS or Windows®. With this utility, you can press the <F6> key during the POST or the <F2> key to enter into the BIOS setup menu to access ASRock Rack Instant Flash. Just launch this tool and save the new BIOS file to your USB flash drive, floppy disk or hard drive, then you can update your BIOS only in a few clicks without preparing an additional floppy diskette or other complicated flash utility. Please be noted that the USB flash drive or hard drive must use FAT32/16/12 file system.

1.4 Motherboard Layout

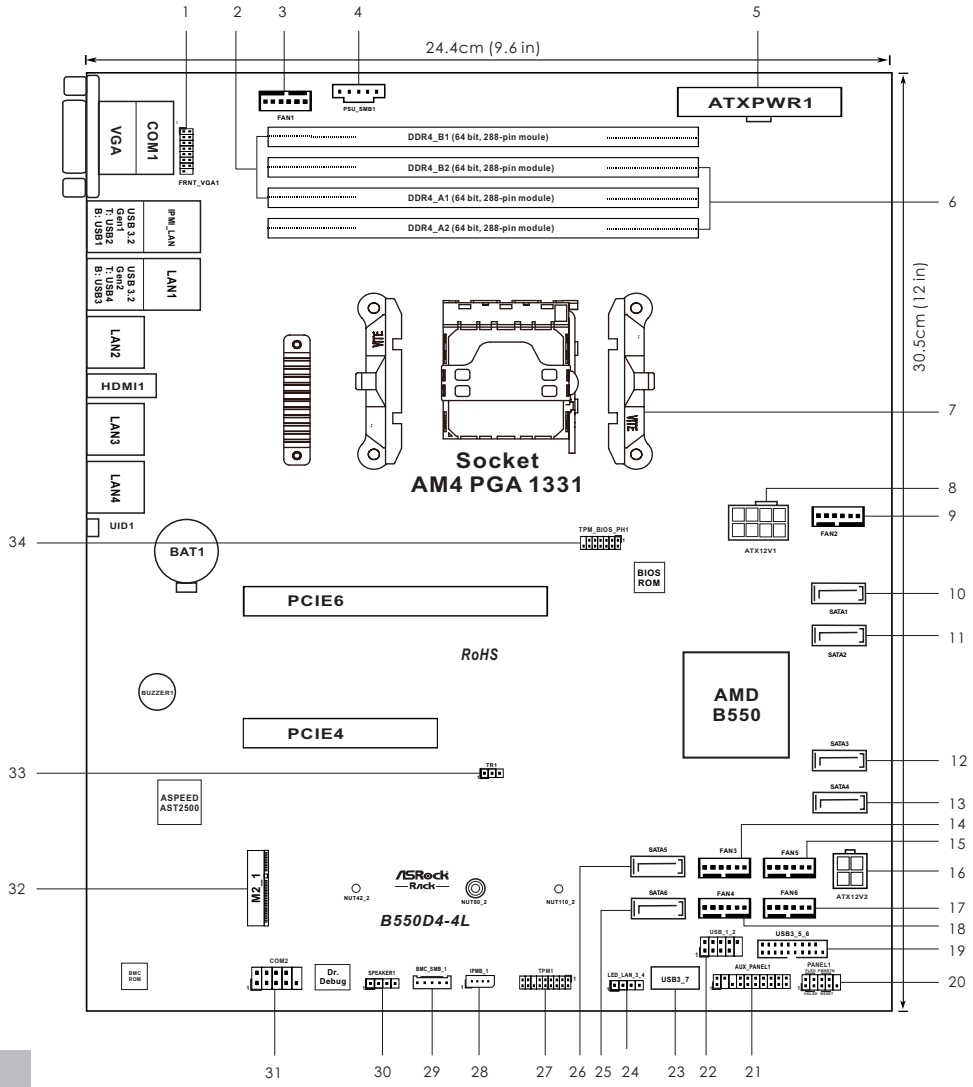

English

No.	Description
1	Front VGA Header (FRNT_VGA1)*
2	2 x 288-pin DDR4 DIMM Slots (DDR4_A1, DDR4_B1, Blue)**
3	System Fan Connector (FAN1)
4	PSU SMBus (PSU_SMB1)
5	ATX Power Connector (ATXPWR1)
6	2 x 288-pin DDR4 DIMM Slots (DDR4_A2, DDR4_B2, White)**
7	AM4 PGA 1331 Socket
8	ATX 12V Power Connector (ATX12V1)
9	System Fan Connector (FAN2)
10	SATA3 Connector (SATA1)
11	SATA3 Connector (SATA2)
12	SATA3 Connector (SATA3)
13	SATA3 Connector (SATA4)
14	System Fan Connector (FAN3)
15	System Fan Connector (FAN5)
16	ATX 4-Pin Power Connector (ATX12V2)
17	System Fan Connector (FAN6)
18	System Fan Connector (FAN4)
19	USB 3.2 Gen1 Header (USB3_5_6)
20	System Panel Header (PANEL1)
21	Auxiliary Panel Header (AUX_PANEL1)
22	USB 2.0 Header (USB_1_2)
23	Vertical Type A USB 3.2 Gen1 (USB3_7)
24	Front LAN LED Connector (LED_LAN_3_4)
25	SATA3 Connector (SATA6)
26	SATA3 Connector (SATA5)
27	TPM Header (TPM1)
28	Intelligent Platform Management Bus Header (IPMB_1)
29	Speaker Header (SPEAKER1)
30	BMC SMBus Header (BMC_SMB_1)
31	COM Port Header (COM2)
32	M.2 Socket (M2_1) (Type 2242 / 2280 / 22110)

No.	Description
33	Thermal Sensor Header (TR1)
34	TPM-SPI Header (TPM_BIOS_PH1)

**If the FRNT_VGA1 header is in use, there will be no signal on the rear VGA port.*
***For DIMM installation and configuration instructions, please see p.20 (Installation of Memory Modules (DIMM)) for more details.*

1.5 Onboard LED Indicators

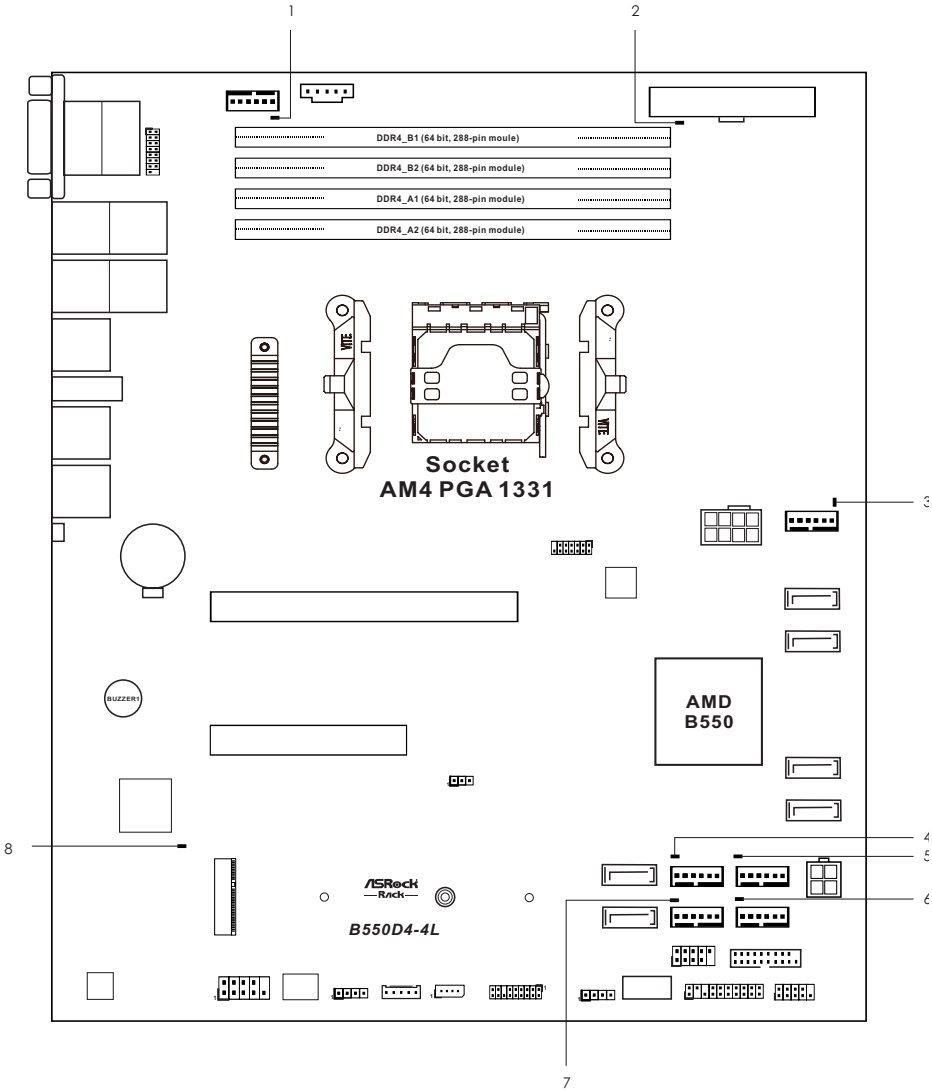

English

No.	Item	Status	Description
1	FAN_LED1	Amber	FAN1 failed
2	SB_PWR1	Green	STB PWR ready
3	FAN_LED2	Amber	FAN2 failed
4	FAN_LED3	Amber	FAN3 failed
5	FAN_LED5	Amber	FAN5 failed
6	FAN_LED6	Amber	FAN6 failed
7	FAN_LED4	Amber	FAN4 failed
8	BMC_LED1	Green	BMC heartbeat LED

1.6 I/O Panel

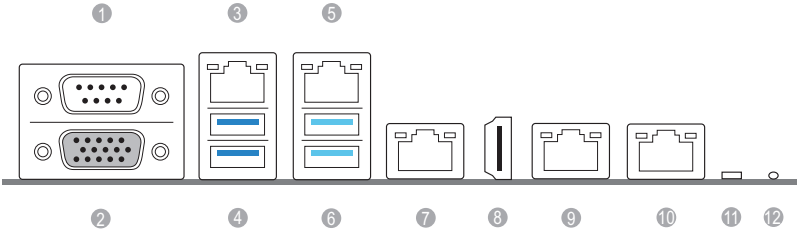

No.	Description	No.	Description
1	Serial Port (COM1)	7	LAN RJ-45 Port (LAN2)****
2	VGA Port (VGA1)*	8	HDMI 1.4 Port (HDMI1)**
3	LAN RJ-45 Port (IPMI_LAN)***	9	LAN RJ-45 Port (LAN3)****
4	USB 3.2 Gen1 Ports (USB3_1_2)	10	LAN RJ-45 Port (LAN4)****
5	LAN RJ-45 Port (LAN1)****	11	UID Switch (UID1)
6	USB 3.2 Gen2 Ports (USB3_3_4)	12	UID LED (UID_LED1)

*If the FRNT_VGA1 header is in use, there will be no signal on the rear VGA port.
**The HDMI1 port is only supported with APU (Renoir) is installed.

LAN Port LED Indications

***There are two LED next to the LAN port. Please refer to the table below for the LAN port LED indications.

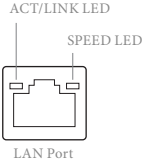

Dedicated IPMI LAN Port LED Indications

Activity / Link LED		Speed LED	
Status	**Description**	**Status**	**Description**
Off	No Link	Off	10M bps connection or no link
Blinking Yellow	Data Activity	Yellow	100M bps connection
On	Link	Green	1G bps connection

English

LAN Port LED Indications

****There are two LED next to the LAN port. Please refer to the table below for the LAN port LED indications.

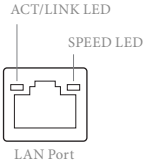

LAN Port LED Indications

Activity / Link LED		Speed LED	
Status	**Description**	**Status**	**Description**
Off	No Link	Off	10Mbps connection or no link
Blinking Orange	Data Activity	Yellow	100Mbps connection
On	Link	Green	1Gbps connection

1.7 Block Diagram

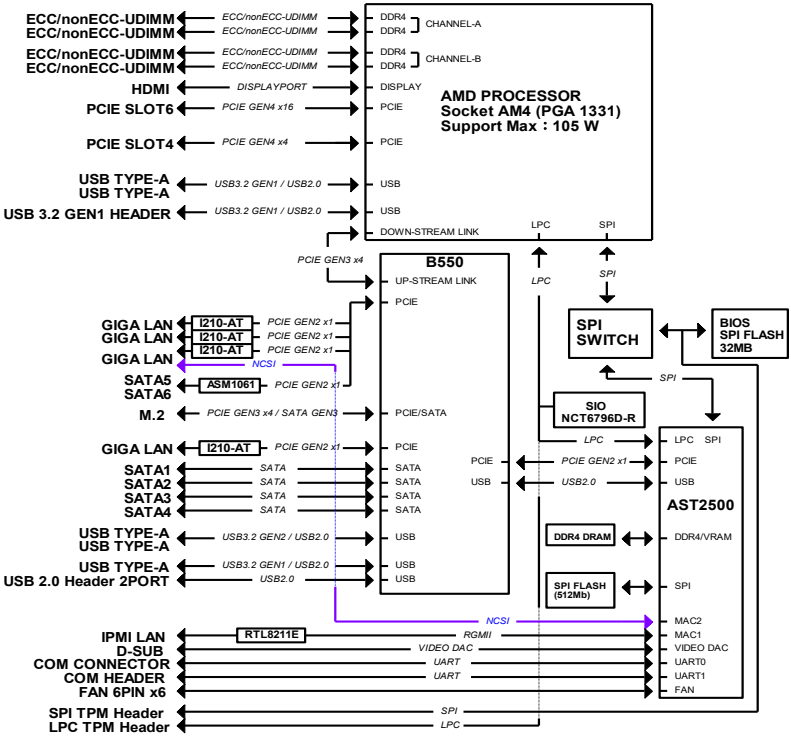

English

Chapter 2 Installation

This is a ATX form factor (9.6” x 12”, 24.4 cm x 30.5 cm) motherboard. Before you install the motherboard, study the configuration of your chassis to ensure that the motherboard fits into it.

Make sure to unplug the power cord before installing or removing the motherboard. Failure to do so may cause physical injuries to you and damages to motherboard components.

2.1 Screw Holes

Place screws into the holes indicated by circles to secure the motherboard to the chassis.

Attention! Before installing this motherboard, be sure to unscrew and remove the standoffs at the marked location, under the motherboard, from the chassis, in order to avoid electrical short circuit and damage to your motherboard.

Do not over-tighten the screws! Doing so may damage the motherboard.

2.2 Pre-installation Precautions

Take note of the following precautions before you install motherboard components or change any motherboard settings.

1. Unplug the power cord from the wall socket before touching any components.
2. To avoid damaging the motherboard’s components due to static electricity, NEVER place your motherboard directly on the carpet or the like. Also remember to use a grounded wrist strap or touch a safety grounded object before you handle the components.
3. Hold components by the edges and do not touch the ICs.
4. Whenever you uninstall any component, place it on a grounded anti-static pad or in the bag that comes with the component.
5. When placing screws into the screw holes to secure the motherboard to the chassis, please do not over-tighten the screws! Doing so may damage the motherboard.

Before you install or remove any component, ensure that the power is switched off or the power cord is detached from the power supply. Failure to do so may cause severe damage to the motherboard, peripherals, and/or components.

2.3 Installing the CPU

Unplug all power cables before installing the CPU.

1

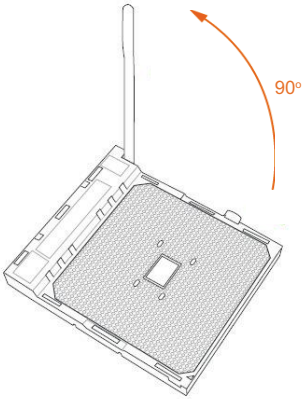

2

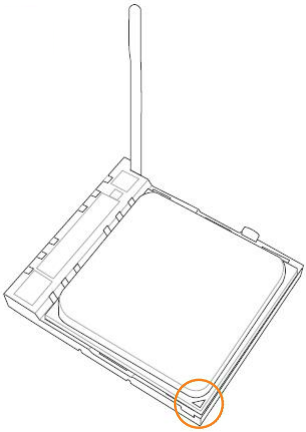

3

2.4 Installing the CPU Fan and Heatsink

After you install the CPU into this motherboard, it is necessary to install a larger heatsink and cooling fan to dissipate heat. You also need to spray thermal grease between the CPU and the heatsink to improve heat dissipation. Make sure that the CPU and the heatsink are securely fastened and in good contact with each other.

*Please be aware of the maximum dimensions of the heatsink to be used is 116 * 83.65mm.*

Please turn off the power or remove the power cord before changing a CPU or heatsink.

Installing the CPU Box Cooler SR1

1

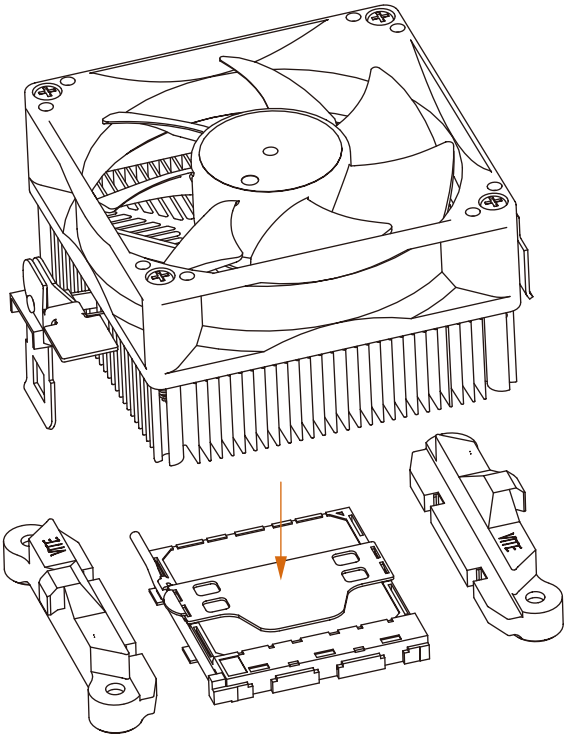

2

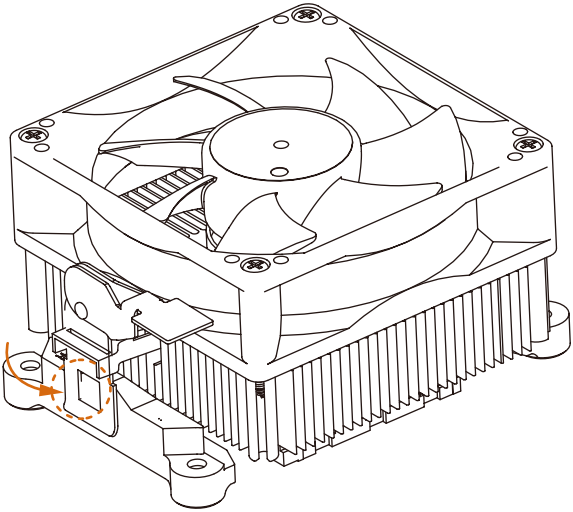

3

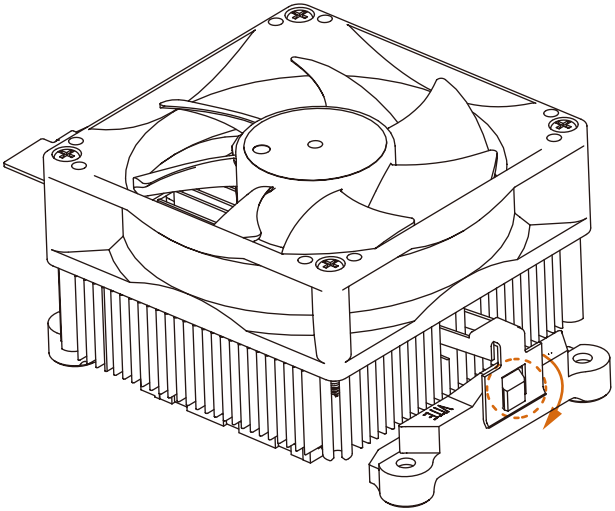

4

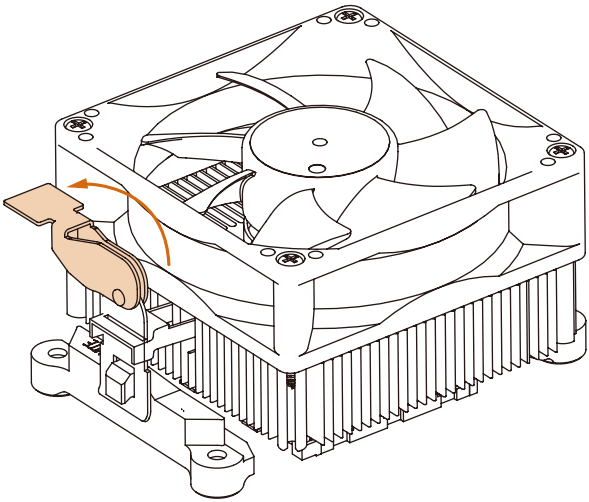

2.5 Installing Memory Modules (DIMM)

This motherboard provides four 288-pin DDR4 (Double Data Rate 4) DIMM slots, and supports Dual Channel Memory Technology.

1. *For dual channel configuration, you always need to install identical (the same brand, speed, size and chip-type) DDR4 DIMM pairs.*
2. *It is unable to activate Dual Channel Memory Technology with only one or three memory module installed.*
3. *It is not allowed to install a DDR, DDR2 or DDR3 memory module into a DDR4 slot; otherwise, this motherboard and DIMM may be damaged.*

DDR4 UDIMM Maximum Frequency Support

UDIMM Memory Slot				Matisse	Renoir	Vermeer
A2	A1	B2	B1	Freq(Mhz)	Freq (Mhz)	Freq (Mhz)
-	SR	-	-	3200	3200	3200
-	DR	-	-	3200	3200	3200
-	SR	-	SR	3200	3200	3200
-	DR	-	DR	3200	3200	3200
SR	SR	SR	SR	2666	2666	2666
DR	DR	DR	DR	2400	2400	2400

1

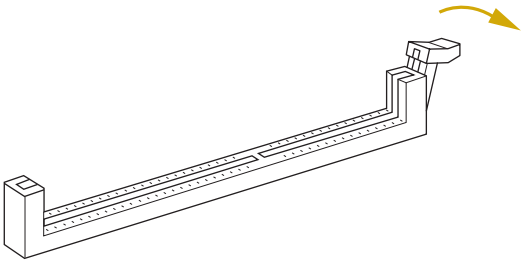

2

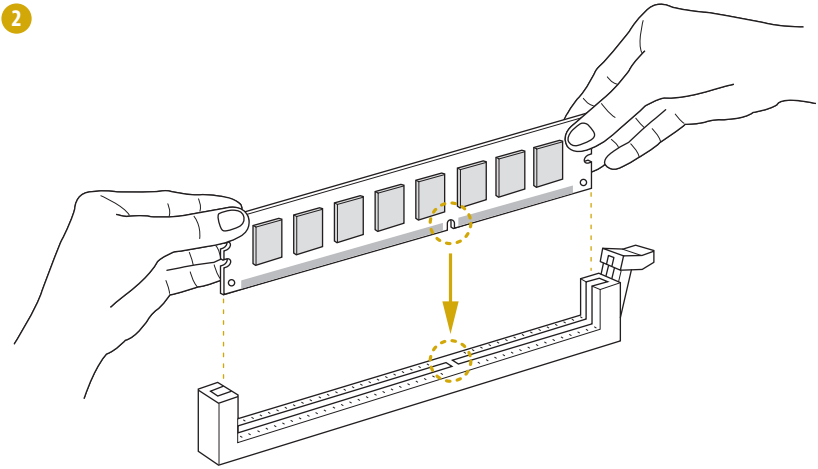

3

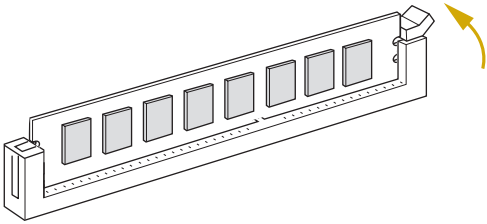

The DIMM only fits in one correct orientation. It will cause permanent damage to the motherboard and the DIMM if you force the DIMM into the slot at incorrect orientation.

2.6 Expansion Slots (PCI Express Slots)

There are 2 PCI Express slots on this motherboard.

PCIE slot:

Vermeer/Matisse:
PCIE4 (PCIE 4.0 x8 slot, from CPU) is used for PCI Express x4 lane width cards.
PCIE6 (PCIE 4.0 x16 slot, from CPU) is used for PCI Express x16 lane width cards.

Slot	Generation	Mechanical	Electrical	Source
PCIE6	4.0	x16	x16	CPU
PCIE4	4.0	x8	x4	CPU

Renoir:
PCIE4 (PCIE 3.0 x8 slot, from CPU) is used for PCI Express x4 lane width cards.
PCIE6 (PCIE 3.0 x16 slot, from CPU) is used for PCI Express x16 lane width cards.

Slot	Generation	Mechanical	Electrical	Source
PCIE6	3.0	x16	x16	CPU
PCIE4	3.0	x8	x4	CPU

Installing an expansion card

Step 1. Before installing an expansion card, please make sure that the power supply is switched off or the power cord is unplugged. Please read the documentation of the expansion card and make necessary hardware settings for the card before you start the installation.

Step 2. Remove the system unit cover (if your motherboard is already installed in a chassis).

Step 3. Remove the bracket facing the slot that you intend to use. Keep the screws for later use.

Step 4. Align the card connector with the slot and press firmly until the card is completely seated on the slot.

Step 5. Fasten the card to the chassis with screws.

Step 6. Replace the system cover.

2.7 Onboard Headers and Connectors

Onboard headers and connectors are NOT jumpers. Do NOT place jumper caps over these headers and connectors. Placing jumper caps over the headers and connectors will cause permanent damage to the motherboard.

System Panel Header
(9-pin PANEL1)
(see p.6, No. 20)

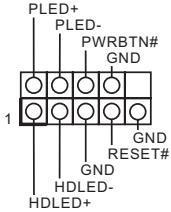

Connect the power switch, reset switch and system status indicator on the chassis to this header according to the pin assignments. Particularly note the positive and negative pins before connecting the cables.

PWRBTN (Power Switch):
Connect to the power switch on the chassis front panel. You may configure the way to turn off your system using the power switch.

RESET (Reset Switch):
Connect to the reset switch on the chassis front panel. Press the reset switch to restart the computer if the computer freezes and fails to perform a normal restart.

PLED (System Power LED):
Connect to the power status indicator on the chassis front panel. The LED is on when the system is operating. The LED is off when the system is in S4 sleep state or powered off (S5).

HDLED (Hard Drive Activity LED):
Connect to the hard drive activity LED on the chassis front panel. The LED is on when the hard drive is reading or writing data.

The front panel design may differ by chassis. A front panel module mainly consists of power switch, reset switch, power LED, hard drive activity LED, speaker and etc. When connecting your chassis front panel module to this header, make sure the wire assignments and the pin assignments are matched correctly.

Auxiliary Panel Header
(18-pin AUX PANEL1)
(see p.6, No. 21)

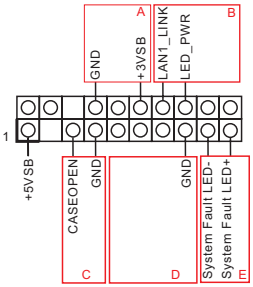

This header supports multiple functions on the front panel, including the front panel SMB, internet status indicator and chassis intrusion pin.

A. Front panel SMBus connecting pin (6-1 pin FPSMB)
This header allows you to connect SMBus (System Management Bus) equipment. It can be used for communication between peripheral equipment in the system, which has slower transmission rates, and power management equipment.

B. Internet status indicator (2-pin LAN1_LED, LAN2_LED)
These two 2-pin headers allow you to use the Gigabit internet indicator cable to connect to the LAN status indicator. When this indicator flickers, it means that the internet is properly connected.

C. Chassis intrusion pin (2-pin CHASSIS)
This header is provided for host computer chassis with chassis intrusion detection designs. In addition, it must also work with external detection equipment, such as a chassis intrusion detection sensor or a microswitch. When this function is activated, if any chassis component movement occurs, the sensor will immediately detect it and send a signal to this header, and the system will then record this chassis intrusion event. The default setting is set to the CASEOPEN and GND pin; this function is off.

D. Locator LED (4-pin LOCATOR)
This header is for the locator switch and LED on the front panel.

E. System Fault LED (2-pin LOCATOR)
This header is for the Fault LED on the system.

Serial ATA3 Connectors
(SATA1:
see p.6, No. 10)
(SATA2:
see p.6, No. 11)
(SATA3:
see p.6, No. 12)
(SATA4:
see p.6, No. 13)
(SATA5:
see p.6, No. 26)
(SATA6:
see p.6, No. 25)

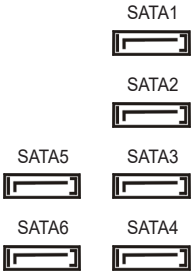

These connectors support SATA data cables for internal storage devices with up to 6.0 Gb/s data transfer rate.

USB 3.2 Gen1 Header
(19-pin USB3_5_6)
(see p.6, No. 19)

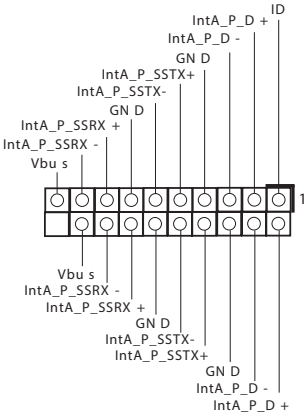

Besides two default USB 3.2 Gen1 ports on the I/O panel, there is one USB 3.2 Gen1 header on this motherboard. This USB 3.2 Gen1 header can support two USB 3.2 Gen1 ports.

USB 3.2 Gen1 Connector
(USB3_7)
(see p.6, No. 23)

USB 2.0 Header
(9-pin USB_1_2)
(see p.6, No. 22)

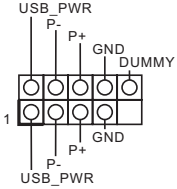

There is one USB 2.0 header on this motherboard. Each USB 2.0 header can support two ports.

English

System Fan Connectors
(6-pin FAN1)
(see p.6, No. 3)
(6-pin FAN2)
(see p.6, No. 9)
(6-pin FAN3)
(see p.6, No. 14)
(6-pin FAN4)
(see p.6, No. 18)
(6-pin FAN5)
(see p.6, No. 15)
(6-pin FAN6)
(see p.6, No. 17)

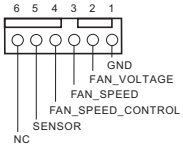

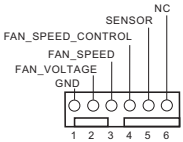

Please connect fan cables to the fan connectors and match the black wire to the ground pin. All fans support Fan Control.

ATX Power Connector
(24-pin ATXPWR1)
(see p.6, No. 5)

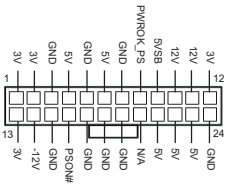

This motherboard provides a 24-pin ATX power connector. To use a 20-pin ATX power supply, please plug it along Pin 1 and Pin 13.

ATX 12V Power Connectors
(8-pin ATX12V1)
(see p.6, No. 8)
(4-pin ATX12V2)
(see p.6, No. 16)

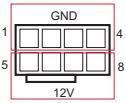

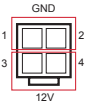

This motherboard provides one 8-pin and one 4-pin ATX 12V power connectors.

TPM Header
(17-pin TPM1)
(see p.6, No. 27)

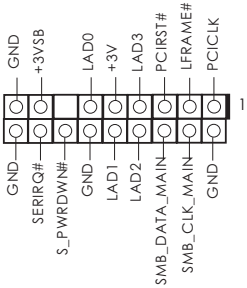

This connector supports Trusted Platform Module (TPM) system, which can securely store keys, digital certificates, passwords, and data. A TPM system also helps enhance network security, protects digital identities, and ensures platform integrity.

English

Thermal Sensor Header (3-pin TR1) (see p.6, No. 33)	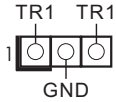	Please connect the thermal sensor cable to either pin 1-2 or pin 2-3 and the other end to the device which you wish to monitor its temperature.
Chassis Speaker Header (4-pin SPEAKER1) (see p.6, No. 30)	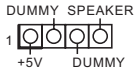	Please connect the chassis speaker to this header.
Serial Port Header (9-pin COM2) (see p.6, No. 31)	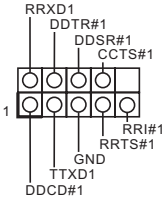	This COM header supports a serial port module.
TPM-SPI Header (13-pin TPM_BIOS_PH1) (see p.6, No. 34)	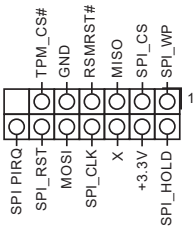	This connector supports Trusted Platform Module (TPM) system for SPI interface, which can securely store keys, digital certificates, passwords, and data. A TPM system also helps enhance network security, protects digital identities, and ensures platform integrity.
Front VGA Header (15-pin FRNT_VGA1) (see p.6, No. 1)	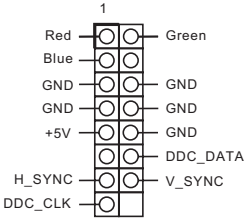	Please connect either end of VGA_2X8 cable to VGA header.

Front LAN LED Connector (LED_LAN_3_4) (see p.6, No. 24)	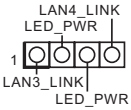	This 4-pin connector is used for the front LAN status indicator.
Intelligent Platform Management Bus Header (4-pin IPMB_1) (see p.6, No. 28)	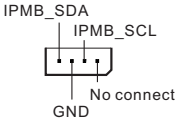	This 4-pin connector is used to provide a cabled base-board or front panel connection for value added features and 3rd-party add-in cards, such as Emergency Management cards, that provide management features using the IPMB.
Baseboard Management Controller SMBus Header (5-pin BMC_SMB_1) (see p.6, No. 29)	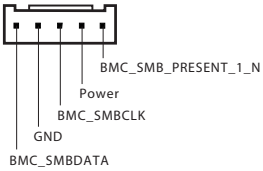	The header is used for the SM BUS devices.
PSU SMBus Header (PSU_SMB1) (see p.2, No. 4)	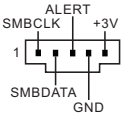	PSU SMBus monitors the status of the power supply, fan and system temperature.

2.8 Dr. Debug

Dr. Debug is used to provide code information, which makes troubleshooting even easier. Please see the diagrams below for reading the Dr. Debug codes.

Code	Description
0x10	PEI_CORE_STARTED
0x11	PEI_CAR_CPU_INIT
0x15	PEI_CAR_NB_INIT
0x19	PEI_CAR_SB_INIT
0x31	PEI_MEMORY_INSTALLED
0x32	PEI_CPU_INIT
0x33	PEI_CPU_CACHE_INIT
0x34	PEI_CPU_AP_INIT
0x35	PEI_CPU_BSP_SELECT
0x36	PEI_CPU_SMM_INIT
0x37	PEI_MEM_NB_INIT
0x3B	PEI_MEM_SB_INIT
0x4F	PEI_DXE_IPL_STARTED
0x60	DXE_CORE_STARTED
0x61	DXE_NVRAM_INIT
0x62	DXE_SBRUN_INIT

0x63	DXE_CPU_INIT
0x68	DXE_NB_HB_INIT
0x69	DXE_NB_INIT
0x6A	DXE_NB_SMM_INIT
0x70	DXE_SB_INIT
0x71	DXE_SB_SMM_INIT
0x72	DXE_SB_DEVICES_INIT
0x78	DXE_ACPI_INIT
0x79	DXE_CSM_INIT
0x90	DXE_BDS_STARTED
0x91	DXE_BDS_CONNECT_DRIVERS
0x92	DXE_PCI_BUS_BEGIN
0x93	DXE_PCI_BUS_HPC_INIT
0x94	DXE_PCI_BUS_ENUM
0x95	DXE_PCI_BUS_REQUEST_RESOURCES
0x96	DXE_PCI_BUS_ASSIGN_RESOURCES
0x97	DXE_CON_OUT_CONNECT
0x98	DXE_CON_IN_CONNECT

0x99	DXE_SIO_INIT
0x9A	DXE_USB_BEGIN
0x9B	DXE_USB_RESET
0x9C	DXE_USB_DETECT
0x9D	DXE_USB_ENABLE
0xA0	DXE_IDE_BEGIN
0xA1	DXE_IDE_RESET
0xA2	DXE_IDE_DETECT
0xA3	DXE_IDE_ENABLE
0xA4	DXE_SCSI_BEGIN
0xA5	DXE_SCSI_RESET
0xA6	DXE_SCSI_DETECT
0xA7	DXE_SCSI_ENABLE
0xA8	DXE_SETUP_VERIFYING_PASSWORD
0xA9	DXE_SETUP_START
0xAB	DXE_SETUP_INPUT_WAIT
0xAD	DXE_READY_TO_BOOT
0xAE	DXE_LEGACY_BOOT

0xAF	DXE_EXIT_BOOT_SERVICES
0xB0	RT_SET_VIRTUAL_ADDRESS_MAP_BEGIN
0xB1	RT_SET_VIRTUAL_ADDRESS_MAP_END
0xB2	DXE_LEGACY_OPROM_INIT
0xB3	DXE_RESET_SYSTEM
0xB4	DXE_USB_HOTPLUG
0xB5	DXE_PCI_BUS_HOTPLUG
0xB6	DXE_NVRAM_CLEANUP
0xB7	DXE_CONFIGURATION_RESET
0xF0	PEI_RECOVERY_AUTO
0xF1	PEI_RECOVERY_USER
0xF2	PEI_RECOVERY_STARTED
0xF3	PEI_RECOVERY_CAPSULE_FOUND
0xF4	PEI_RECOVERY_CAPSULE_LOADED
0xE0	PEI_S3_STARTED
0xE1	PEI_S3_BOOT_SCRIPT
0xE2	PEI_S3_VIDEO_REPOST

0xE3	PEI_S3_OS_WAKE
0x50	PEI_MEMORY_INVALID_TYPE
0x53	PEI_MEMORY_NOT_DETECTED
0x55	PEI_MEMORY_NOT_INSTALLED
0x57	PEI_CPU_MISMATCH
0x58	PEI_CPU_SELF_TEST_FAILED
0x59	PEI_CPU_NO_MICROCODE
0x5A	PEI_CPU_ERROR
0x5B	PEI_RESET_NOT_AVAILABLE
0xD0	DXE_CPU_ERROR
0xD1	DXE_NB_ERROR
0xD2	DXE_SB_ERROR
0xD3	DXE_ARCH_PROTOCOL_NOT_AVAILABLE
0xD4	DXE_PCI_BUS_OUT_OF_RESOURCES
0xD5	DXE_LEGACY_OPROM_NO_SPACE
0xD6	DXE_NO_CON_OUT
0xD7	DXE_NO_CON_IN

0xD8	DXE_INVALID_PASSWORD
0xD9	DXE_BOOT_OPTION_LOAD_ERROR
0xDA	DXE_BOOT_OPTION_FAILED
0xDB	DXE_FLASH_UPDATE_FAILED
0xDC	DXE_RESET_NOT_AVAILABLE
0xE8	PEI_MEMORY_S3_RESUME_FAILED
0xE9	PEI_S3_RESUME_PPI_NOT_FOUND
0xEA	PEI_S3_BOOT_SCRIPT_ERROR
0xEB	PEI_S3_OS_WAKE_ERROR

2.9 Unit Identification purpose LED/Switch

With the UID button, You are able to locate the server you're working on from behind a rack of servers.

Unit Identification purpose LED (UID_LED1)/Switch (UID1)

When the UID button on the front or rear panel is pressed, the front/rear UID blue LED indicator will be turned on. Press the UID button again to turn off the indicator.

2.10 Driver Installation Guide

To install the drivers to your system, please insert the support CD to your optical drive first. Then, the drivers compatible to your system can be auto-detected and listed on the support CD driver page. Please follow the order from top to bottom to install those required drivers. Therefore, the drivers you install can work properly.

2.11 M.2_SSD (NGFF) Module Installation Guide

The M.2, also known as the Next Generation Form Factor (NGFF), is a small size and versatile card edge connector that aims to replace mPCIe and mSATA. The Ultra M.2 Socket (M2_1) supports a M.2 SATA3 6.0 Gb/s module or a M.2 PCI Express module up to Gen3 x4(32Gb/s).

Installing the M.2_SSD (NGFF) Module

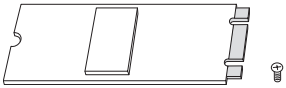

Step 1

Prepare a M.2_SSD (NGFF) module and the screw.

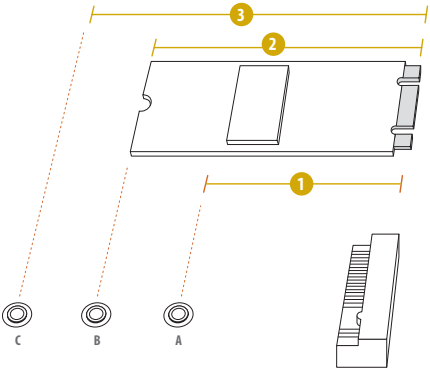

Step 2

Depending on the PCB type and length of your M.2_SSD (NGFF) module, find the corresponding nut location to be used.

No.	1	2	3
Nut Location	NUT42	NUT80	NUT110
PCB Length	4.2cm	8cm	11cm
Module Type	Type2242	Type 2280	Type 22110

English

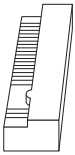

Step 3

Move the standoff based on the module type and length.
Skip Step 3 and 4 and go straight to Step 5 if you are going to use the default nut.
Otherwise, release the standoff by hand.

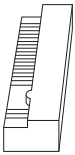

Step 4

Peel off the yellow protective film on the nut to be used. Hand tighten the standoff into the desired nut location on the motherboard.

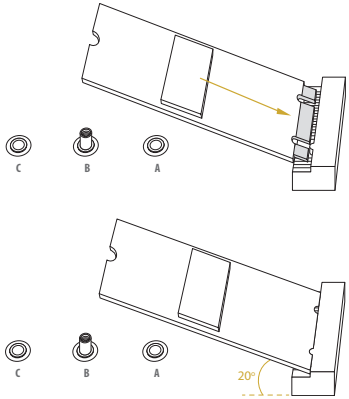

Step 5

Align and gently insert the M.2 (NGFF) SSD module into the M.2 slot. Please be aware that the M.2 (NGFF) SSD module only fits in one orientation.

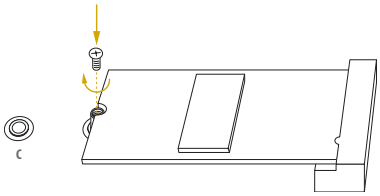

Step 6

Tighten the screw with a screwdriver to secure the module into place.
Please do not overtighten the screw as this might damage the module.

For the latest updates of M.2_SSD (NFGG) module support list, please visit our website for details: http://www.asrockrack.com

Chapter 3 UEFI Setup Utility

3.1 Introduction

This section explains how to use the UEFI SETUP UTILITY to configure your system. The UEFI chip on the motherboard stores the UEFI SETUP UTILITY. You may run the UEFI SETUP UTILITY when you start up the computer. Please press <F2> or <Del> during the Power-On-Self-Test (POST) to enter the UEFI SETUP UTILITY; otherwise, POST will continue with its test routines.

If you wish to enter the UEFI SETUP UTILITY after POST, restart the system by pressing <Ctrl> + <Alt> + <Delete>, or by pressing the reset button on the system chassis. You may also restart by turning the system off and then back on.

Because the UEFI software is constantly being updated, the following UEFI setup screens and descriptions are for reference purpose only, and they may not exactly match what you see on your screen.

3.1.1 UEFI Menu Bar

The top of the screen has a menu bar with the following selections:

Item	Description
Main	To set up the system time/date information
Advanced	To set up the advanced UEFI features
Server Mgmt	To manage the server
Security	To set up the security features
Boot	To set up the default system device to locate and load the Operating System
Exit	To exit the current screen or the UEFI SETUP UTILITY

Use <←> key or <→> key to choose among the selections on the menu bar, and then press <Enter> to get into the sub screen.

English

3.1.2 Navigation Keys

Please check the following table for the function description of each navigation key.

Navigation Key(s)	Function Description
← / →	Moves cursor left or right to select Screens
↑ / ↓	Moves cursor up or down to select items
+ / -	To change option for the selected items
<Tab>	Switch to next function
<Enter>	To bring up the selected screen
<PGUP>	Go to the previous page
<PGDN>	Go to the next page
<HOME>	Go to the top of the screen
<END>	Go to the bottom of the screen
<F1>	To display the General Help Screen
<F7>	Discard changes and exit the UEFI SETUP UTILITY
<F9>	Load optimal default values for all the settings
<F10>	Save changes and exit the UEFI SETUP UTILITY
<F12>	Print screen
<ESC>	Jump to the Exit Screen or exit the current screen

3.2 Main Screen

Once you enter the UEFI SETUP UTILITY, the Main screen will appear and display the system overview. The Main screen provides system overview information and allows you to set the system time and date.

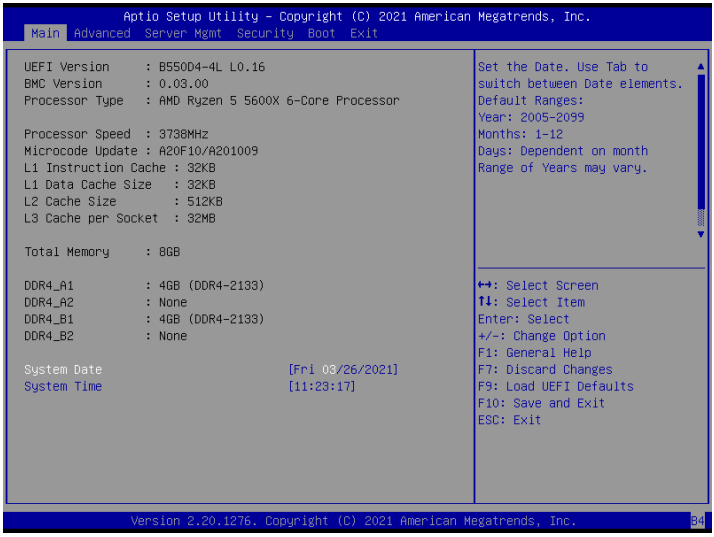

English

3.3 Advanced Screen

In this section, you may set the configurations for the following items: CPU Configuration, Chipset Configuration, Storage Configuration, ACPI Configuration, USB Configuration, Super IO Configuration, Serial Port Console Redirection, H/W Monitor, RAM Disk Configuration, Tls Auth Configuration, AMD PBS, AMD Overclocking, AMD CBS and Instant Flash.

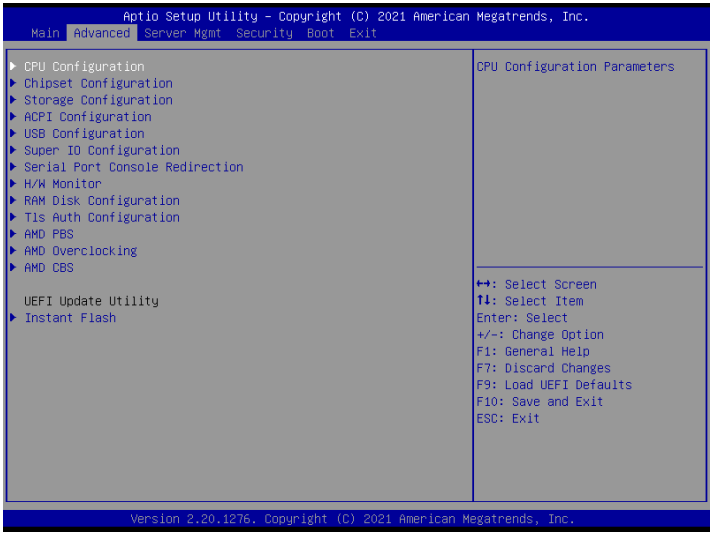

Setting wrong values in this section may cause the system to malfunction.

English

3.3.1 CPU Configuration

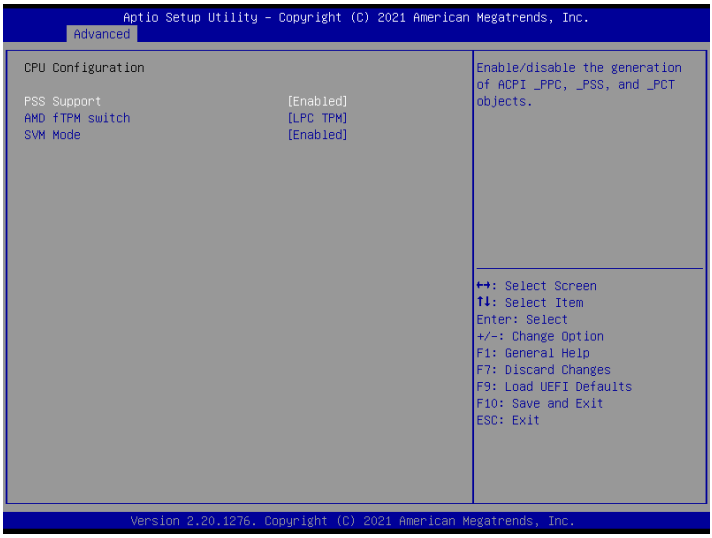

PSS Support

Enable/disable the generation of ACPI _PPC, _PSS, and _PCT objects.

AMD fTPM switch

To select. 0: AMD CPU fTPM. 1 - LPC TPM. 2 - SPI TPM

SVM Mode

Enable/disable CPU Virtualization.

3.3.2 Chipset Configuration

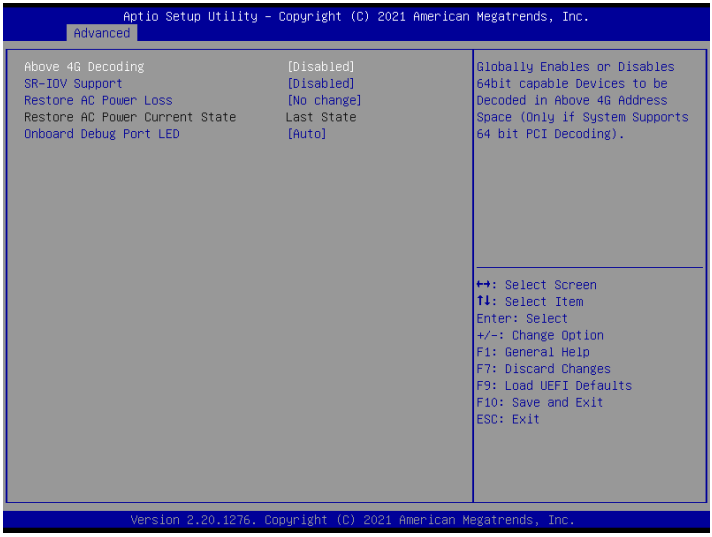

Above 4G Decoding

Globally Enables or Disables 64bit capable Devices to be Decoded in Above 4G Address Space (Only if System Supports 64 bit PCI Decoding).

SR-IOV Support

If system has SR-IOV capable PCIe Devices, this option Enables or Disables Single Root IO Virtualization Support.

Restore AC Power Loss

Select the power state after a power failure. If [Power Off] is selected, the power will remain off when the power recovers. If [Power On] is selected, the system will start to boot up when the power recovers.

Restore AC Power Current State

This allows you to restore AC Power Current State.

Onboard Debug Port LED

Enable or disable the onboard Dr. Debug LED.

3.3.3 Storage Configuration

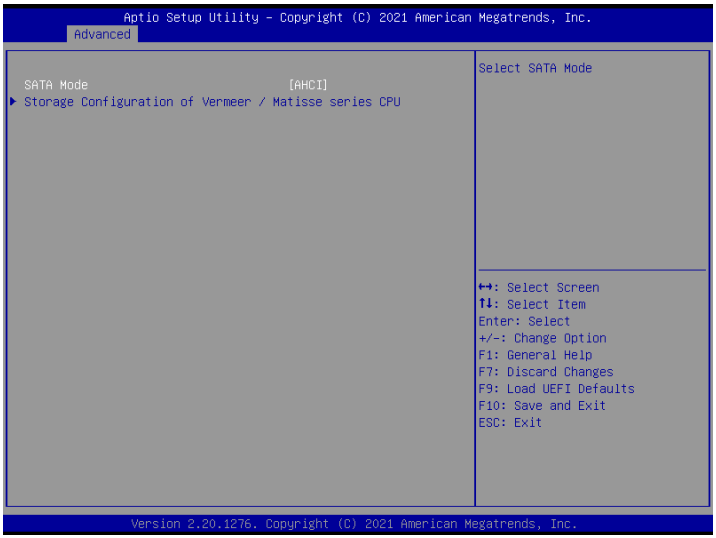

SATA Mode

Select SATA Mode.

Storage Configuration of Vermeer / Matisse series CPU

Configure storage devices of Vermeer / Matisse series CPU.

3.3.4 ACPI Configuration

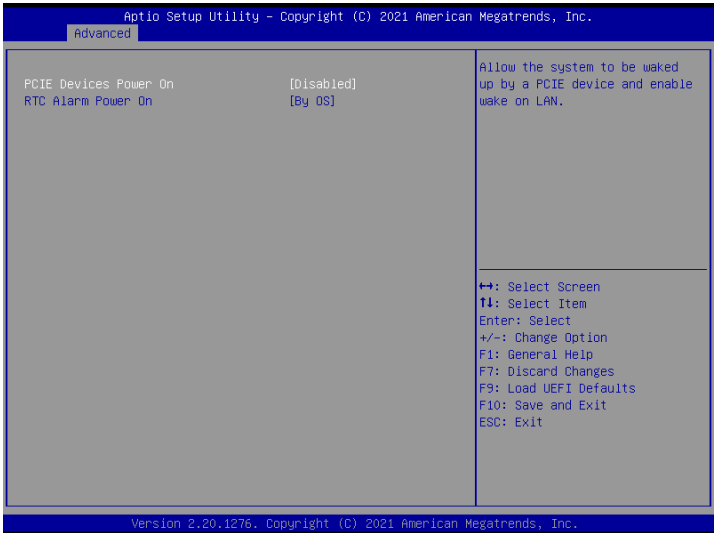

PCIE Devices Power On

Allow the system to be waked up by a PCIE device and enable wake on LAN.

RTC Alarm Power On

Allow the system to be waked up by the real time clock alarm. Set it to By OS to let it be handled by your operating system.

3.3.5 USB Configuration

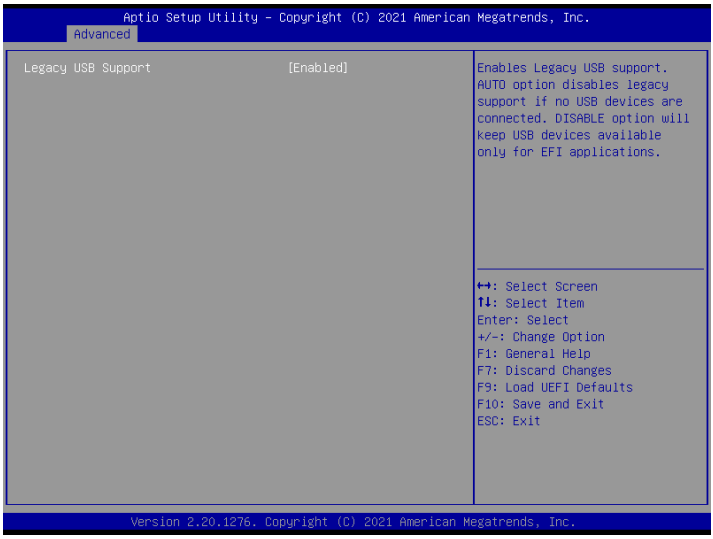

Legacy USB Support

Enables Legacy USB support. AUTO option disables legacy support if no USB devices are connected. DISABLE option will keep USB devices available only for EFI applications.

3.3.6 Super IO Configuration

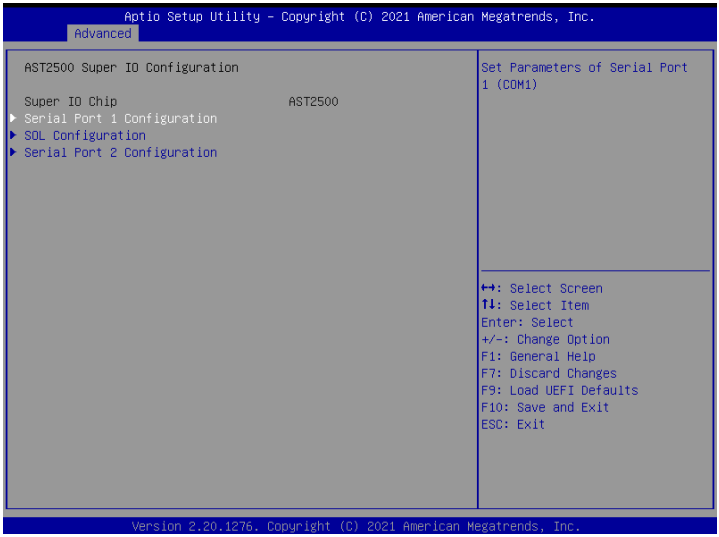

Serial Port 1 Configuration

Use this item to set parameters of Serial Port 1 (COM1).

Serial Port

Use this item to enable or disable the serial port.

Serial Port Address

Use this item to select an optimal setting for Super IO device.

SOL Configuration

Use this item to set parameters of SOL.

SOL Port

Use this item to enable or disable SOL Port.

Serial Port Address

Use this item to select an optimal setting for Super IO device.

Serial Port 2 Configuration

Use this item to set parameters of Serial Port 1 (COM1).

Serial Port

Use this item to enable or disable the serial port.

Change Settings

Use this item to select an optimal setting for Super IO device.

3.3.7 Serial Port Console Redirection

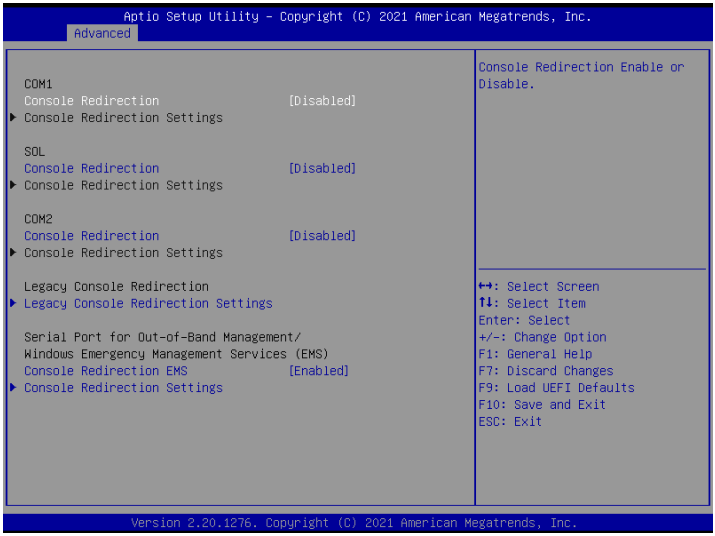

COM1 / SOL / COM2

Console Redirection

Use this option to enable or disable Console Redirection. If this item is set to Enabled, you can select a COM Port to be used for Console Redirection.

Console Redirection Settings

Use this option to configure Console Redirection Settings, and specify how your computer and the host computer to which you are connected exchange information.

Terminal Type

Use this item to select the preferred terminal emulation type for out-of-band management. It is recommended to select [VT-UTF8].

Option	Description
VT100	ASCII character set
VT100+	Extended VT100 that supports color and function keys
VT-UTF8	UTF8 encoding is used to map Unicode chars onto 1 or more bytes
ANSI	Extended ASCII character set

Bits Per Second

Use this item to select the serial port transmission speed. The speed used in the host computer and the client computer must be the same. Long or noisy lines may require lower transmission speed. The options include [9600], [19200], [57600] and [115200].

Data Bits

Use this item to set the data transmission size. The options include [7] and [8] (Bits).

Parity

Use this item to select the parity bit. The options include [None], [Even], [Odd], [Mark] and [Space].

Stop Bits

The item indicates the end of a serial data packet. The standard setting is [1] Stop Bit. Select [2] Stop Bits for slower devices.

Flow Control

Use this item to set the flow control to prevent data loss from buffer overflow. When sending data, if the receiving buffers are full, a "stop" signal can be sent to stop the data flow. Once the buffers are empty, a "start" signal can be sent to restart the flow. Hardware flow uses two wires to send start/stop signals. The options include [None] and [Hardware RTS/CTS].

VT-UTF8 Combo Key Support

Use this item to enable or disable the VT-UTF8 Combo Key Support for ANSI/VT100 terminals.

Recorder Mode

Use this item to enable or disable Recorder Mode to capture terminal data and send it as text messages.

Resolution 100x31

Use this item to enable or disable extended terminal resolution support.

Putty Keypad

Use this item to select Function Key and Keypad on Putty.

Legacy Console Redirection

Legacy Console Redirection Settings

Use this option to configure Legacy Console Redirection Settings, and specify how your computer and the host computer to which you are connected exchange information.

Redirection COM Port

Select a COM port to display redirection of Legacy OS and Legacy OPROM Messages.

Resolution

On Legacy OS, the Number of Rows and Columns supported redirection.

Redirect After POST

When Bootloader is selected, then Legacy Console Redirection is disabled before booting to legacy OS. When Always Enable is selected, then Legacy Console Redirection is enabled for legacy OS. Default setting for this option is set to Always Enable.

Serial Port for Out-of-Band Management/Windows Emergency Management Services (EMS)

Console Redirection

Use this option to enable or disable Console Redirection. If this item is set to Enabled, you can select a COM Port to be used for Console Redirection.

Console Redirection Settings

Use this option to configure Console Redirection Settings, and specify how your computer and the host computer to which you are connected exchange information.

Out-of-Band Mgmt Port

Microsoft Windows Emergency Management Services (EMS) allows for remote management of a Windows Server OS through a serial port.

Terminal Type EMS

Use this item to select the preferred terminal emulation type for out-of-band management. It is recommended to select [VT-UTF8].

Option	Description
VT100	ASCII character set
VT100+	Extended VT100 that supports color and function keys
VT-UTF8	UTF8 encoding is used to map Unicode chars onto 1 or more bytes
ANSI	Extended ASCII character set

Bits Per Second EMS

Use this item to select the serial port transmission speed. The speed used in the host computer and the client computer must be the same. Long or noisy lines may require lower transmission speed. The options include [9600], [19200], [57600] and [115200].

Flow Control EMS

Use this item to set the flow control to prevent data loss from buffer overflow. When sending data, if the receiving buffers are full, a "stop" signal can be sent to stop the data flow. Once the buffers are empty, a "start" signal can be sent to restart the flow. Hardware flow uses two wires to send start/stop signals. The options include [None], [Hardware RTS/CTS], and [Software Xon/Xoff].

Data Bits

Parity

Stop Bits

3.3.8 H/W Monitor

In this section, it allows you to monitor the status of the hardware on your system, including the parameters of the CPU temperature, motherboard temperature, CPU fan speed, chassis fan speed, and the critical voltage.

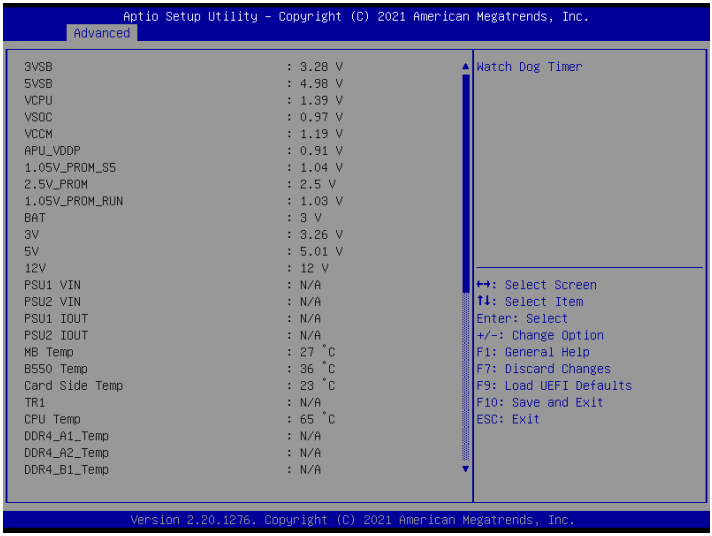

Watch Dog Timer

This allows you to enable or disable the Watch Dog Timer. The default value is [Disabled].

3.3.9 RAM Disk Configuration

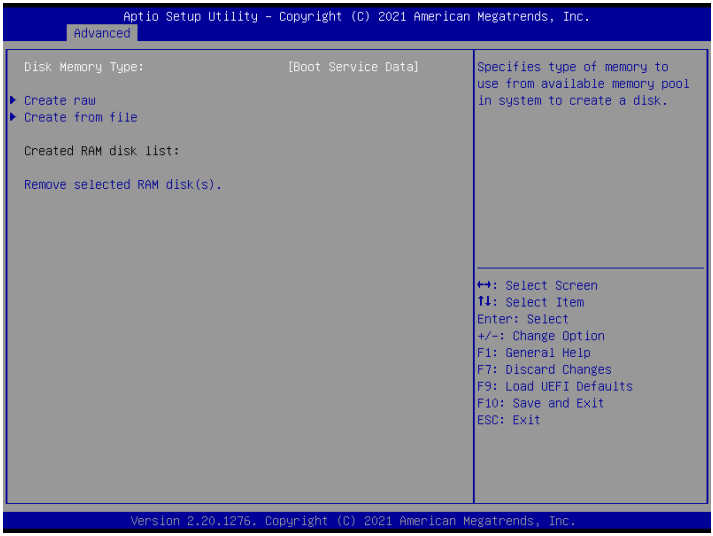

Disk Memery Type

Specifies type of memory to use from available memory pool in system to create a disk.

Create raw

Create a raw RAM disk.

Create from file

Create a RAM disk from a given file.

Remove selected RAM disk(s)

Remove selected RAM disk(s).

3.3.10 Tls Auth Configuration

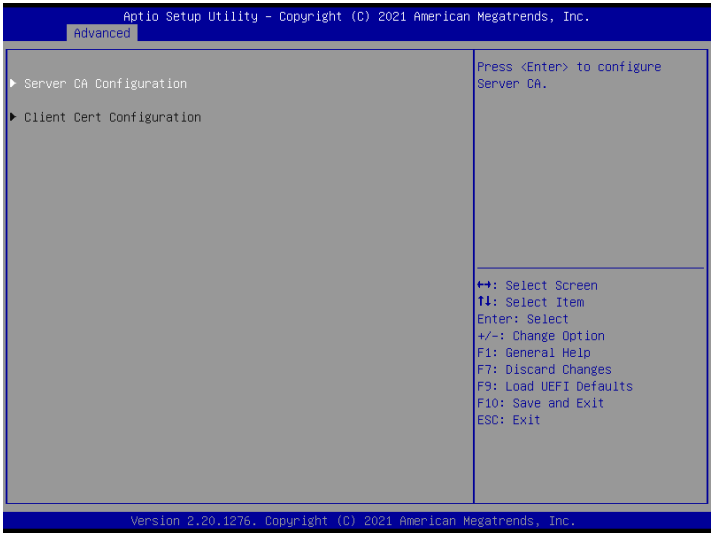

Server CA Configuration

Press <Enter> to configure Server CA.

Client Cert Configuration

Enroll Cert

Press <Enter> to enroll cert.

Delete Cert

Press <Enter> to delete cert.

3.3.11 AMD PBS

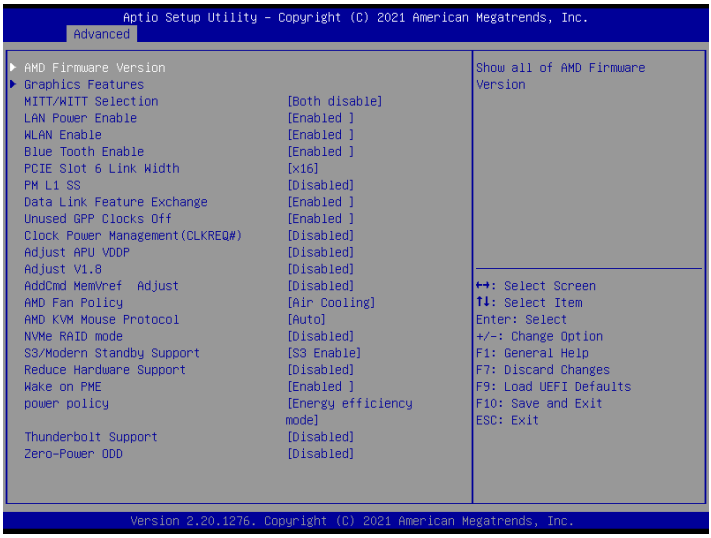

AMD Firmware Version

Show all of AMD Firmware Version.

Graphics Features

Show all of AMD Firmware Version.

MITT/WITT Selection

Use this item to configure MITT/WITT Selection.

LAN Power Enable

Use this item to enable or disable LAN power.

WLAN Enable

Use this item to enable or disable WLAN.

Blue Tooth Enable

Use this item to enable or disable Bluetooth.

PCIE Slot 6 Link Width

Configure Slot 6 Slot PCIe Lanes.

PM L1 SS

Enable for PM L1 SS and ASPM L1 SS.

Data Link Feature Exchange

Enable or Disable Data Link Feature Exchange, try to disable it if any Legacy Endpoint can not boot.

Unused GPP Clocks Off

Turn Unused GPP Clocks Off.

Clock Power Management (CLKREQ#)

Enable or disable CLKREQ#.

Adjust APU VDDP

Adjust APU VDDP, stepping is 2.5mV. Vddp = 1.05V +/- N * 2.5 mV, input rang is 0-127.

Adjust V1.8

Adjust V1.8, stepping is 1mV. V1.8 = 1.8V +/- N * 1 mV, input rang is 0-127.

AddCmd MemVref Adjust

AddCmd MemVref Adjust, stepping is VDDIO * (1/256). MEM_VREF = VDDIO * (N / 256), input range is 1-255.

AMD Fan Policy

[Air Cooling] to follow platform defined policy
[Water Cooling] to force PWM 100%
Select [Fan Control] to [Manual] in CBS will override this option.

AMD KVM Mouse Protocol

Switch KVM Mouse Protocol between Absolute/Simple.

NVMe RAID mode

Enable or disable NVMe RAID mode. Please setting the 'PCIe/GFX Lanes Configuration' item according to the RAID configuration.

S3 Modern Standby Support

Switch S3/Modern Standby. It may be disabled in OS by Down Core or Disable SMT when S3 is enabled.

Reduce Hardware Support

Enable/Disable Reduce Hardware Support. Please disable PME wakeup when Reduce Hardware enabled.

Wake on PME

Determines the action taken when the system power is off and a PCI Power Management

Enable wake up event occurs.

Power Policy

Use this item to configure the power policy.

Thunderbolt Support

Use this item to enable Thunderbolt Support.

Zero-Power ODD

To Enable or Disable Zero-Power ODD Feature.

3.3.12 AMD Overclocking

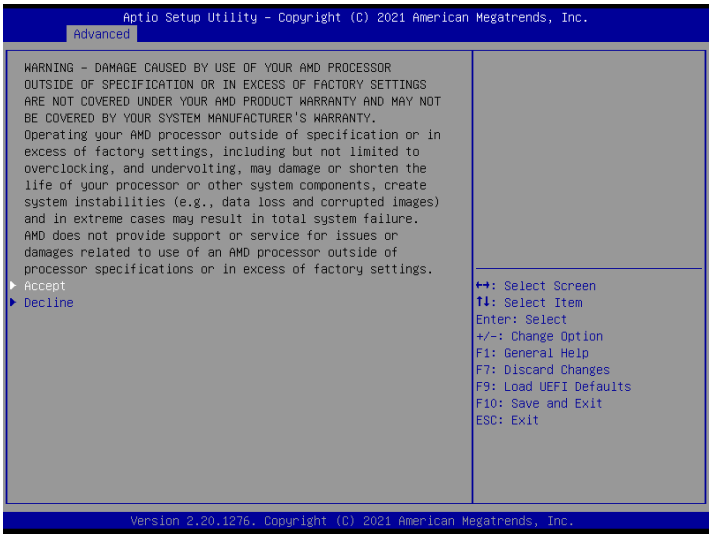

The AMD Overclocking menu accesses options for configuring CPU frequency and voltage.

3.3.13 AMD CBS

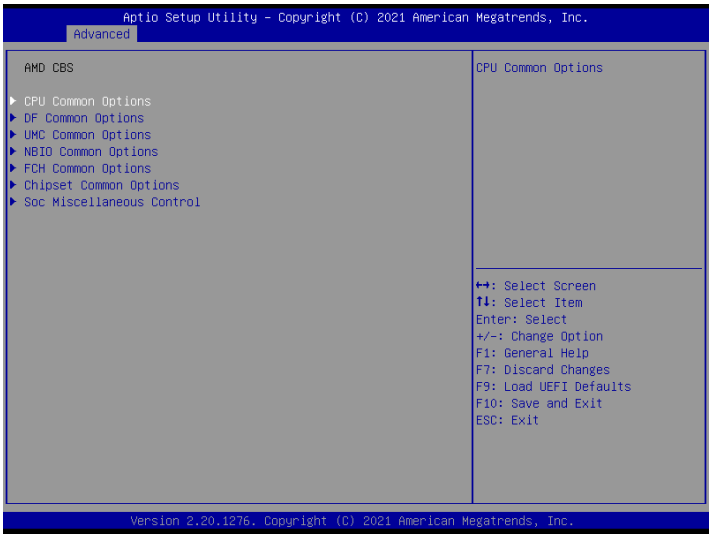

CPU Common Options

Use this item to configure CPU Common options.

DF Common Options

Use this item to configure DF Common options.

UMC Common Options

Use this item to configure UMC Common options.

NBIO Common Options

Use this item to configure NBIO Common options.

FCH Common Options

Use this item to configure FCH Common options.

Chipset Common Options

Use this item to configure Chipset Common options.

Soc Miscellaneous Control

Use this item to configure Soc Miscellaneous Control.

3.3.14 Instant Flash

Instant Flash is a UEFI flash utility embedded in Flash ROM. This convenient UEFI update tool allows you to update system UEFI without entering operating systems first like MS-DOS or Windows®. Just save the new UEFI file to your USB flash drive, floppy disk or hard drive and launch this tool, then you can update your UEFI only in a few clicks without preparing an additional floppy diskette or other complicated flash utility. Please be noted that the USB flash drive or hard drive must use FAT32/16/12 file system. If you execute Instant Flash utility, the utility will show the UEFI files and their respective information. Select the proper UEFI file to update your UEFI, and reboot your system after the UEFI update process is completed.

3.4 Server Mgmt

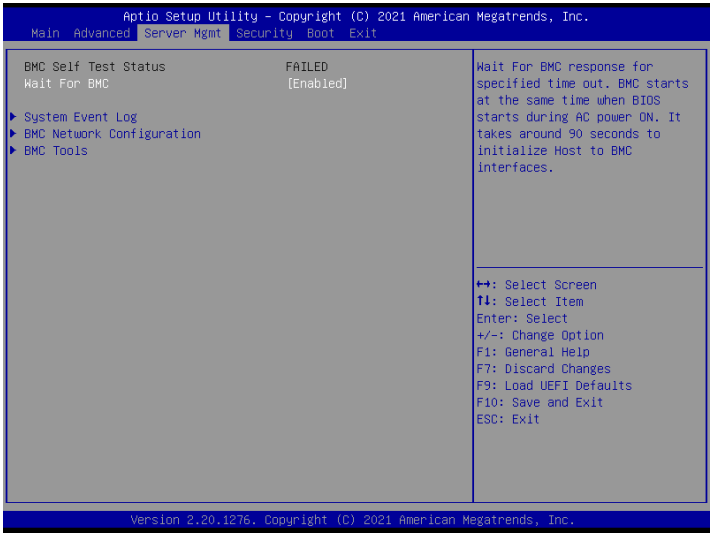

Wait For BMC

Wait For BMC response for specified time out. BMC starts at the same time when BIOS starts during AC power ON. It takes around 90 seconds to initialize Host to BMC interfaces.

3.4.1 System Event Log

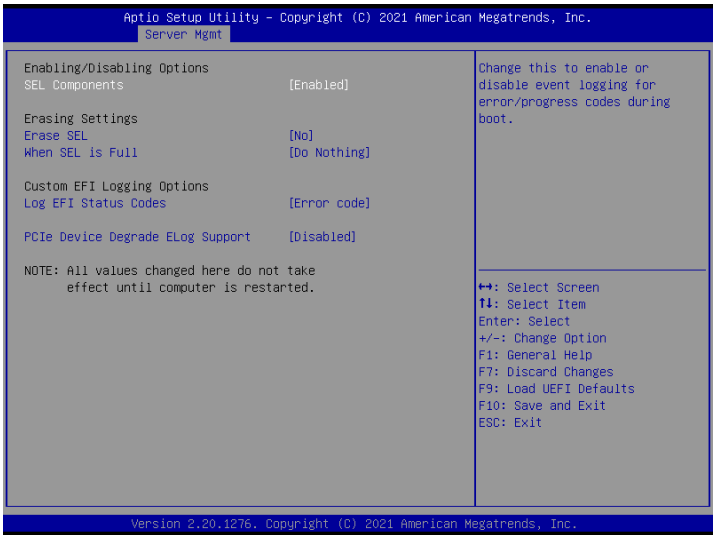

SEL Components

Change this to enable ro disable event logging for error/progress codes during boot.

Erase SEL

Use this to choose options for earsing SEL.

When SEL is Full

Use this to choose options for reactions to a full SEL.

Log EFI Status Codes

Use this item to disable the logging of EFI Status Codes or log only error code or only progress code or both.

PCIe Device Degrade Elog Support

Use this item to enable or disable PCIe Device Degrade Error Logging Support.

3.4.2 BMC Network Configuration

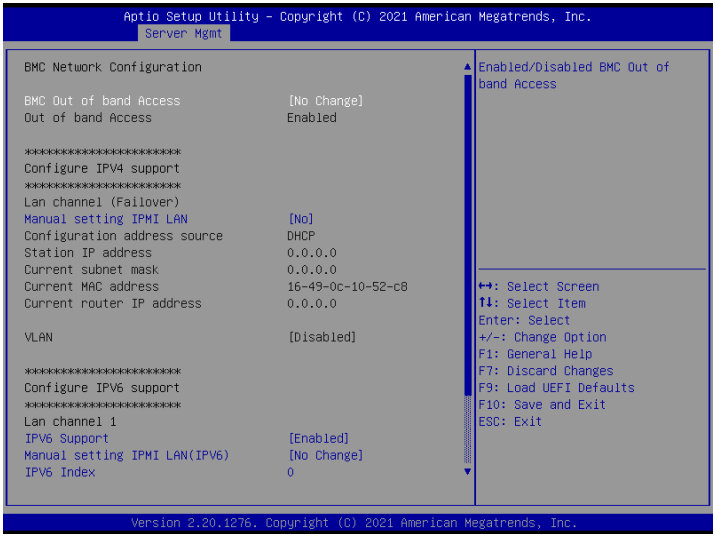

BMC Out of Band Access

Enabled/Disabled BMC Out of band Access.

Manual Setting IPMI LAN

If [No] is selected, the IP address is assigned by DHCP. If you prefer using a static IP address, toggle to [Yes], and the changes take effect after the system reboots. The default value is [No].

Configuration Address Source

Select to configure BMC network parameters statically or dynamically(by BIOS or BMC). Configuration options: [Static] and [DHCP].

Static: Manually enter the IP Address, Subnet Mask and Gateway Address in the BIOS for BMC LAN channel configuration.
DHCP: IP address, Subnet Mask and Gateway Address are automatically assigned by the network's DHCP server.

The default login information for the IPMI web interface is:
Username: admin
Password: admin

For more instructions on how to set up remote control environment and use the IPMI management platform, please refer to the IPMI Configuration User Guide or go to the Support website at: http://www.asrockrack.com/support/faq.asp

VLAN

Enabled/Disabled Virtual Local Area Network.
If [Enabled] is selected, configure the items below.

IPV6 Support

Enable or Disable LAN1 IPV6 Support.

Manual Setting IPMI LAN (IPV6)

If [No] is selected, the IP address is assigned by DHCP. If you prefer using a static IP address, toggle to [Yes], and the changes take effect after the system reboots. The default value is [No].

IPV6 Index

IPV6 Index - Set Selector for Static IP, range: 0 to 15.

VLAN ID

Use this item to configure VLAN ID setting.

VLAN Priority

Use this item to configure VLAN Priority setting.

3.4.3 BMC Tools

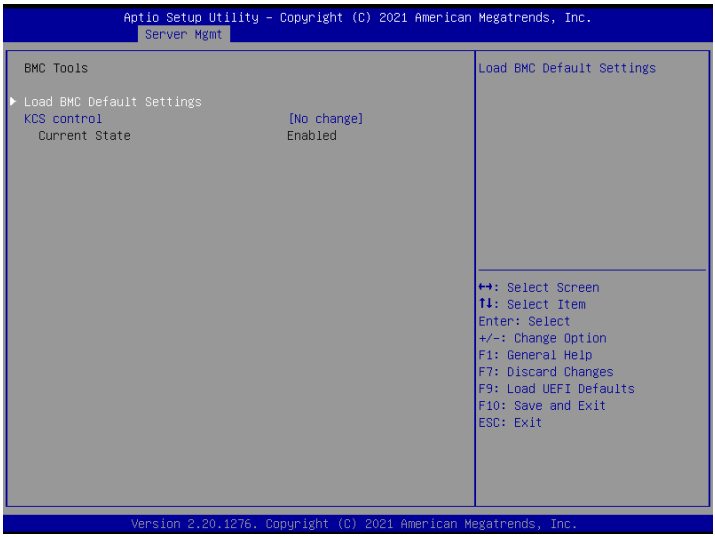

Load BMC Default Settings

Use this item to Load BMC Default Settings

KCS Control

Select this KCS interface state after POST end. If [Enabled] us selected, the BMC will remain KCS interface after POST stage. If [Disabled] is selected, the BMC will disable KCS interface after POST stage

3.4 Security

In this section, you may set or change the supervisor/user password for the system. For the user password, you may also clear it.

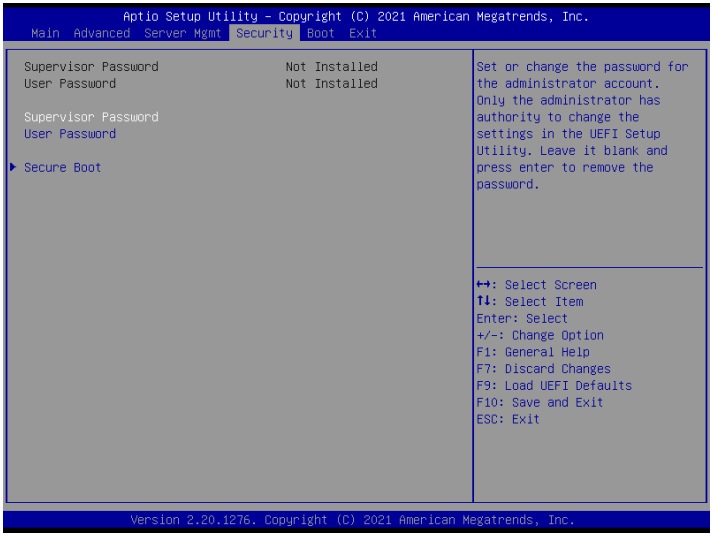

Supervisor Password

Set or change the password for the administrator account. Only the administrator has authority to change the settings in the UEFI Setup Utility. Leave it blank and press enter to remove the password.

User Password

Set or change the password for the user account. Users are unable to change the settings in the UEFI Setup Utility. Leave it blank and press enter to remove the password.

Secure Boot

Use this to enable or disable Secure Boot Control. The default value is [Disabled]. Enable to support Windows 8 or later versions Secure Boot.

Secure Boot Mode

Secure Boot mode selector: Standard/Custom. In Custom mode Secure Boot Variables can be configured without authentication.

3.4.1 Key Management

In this section, expert users can modify Secure Boot Policy variables without full authentication.

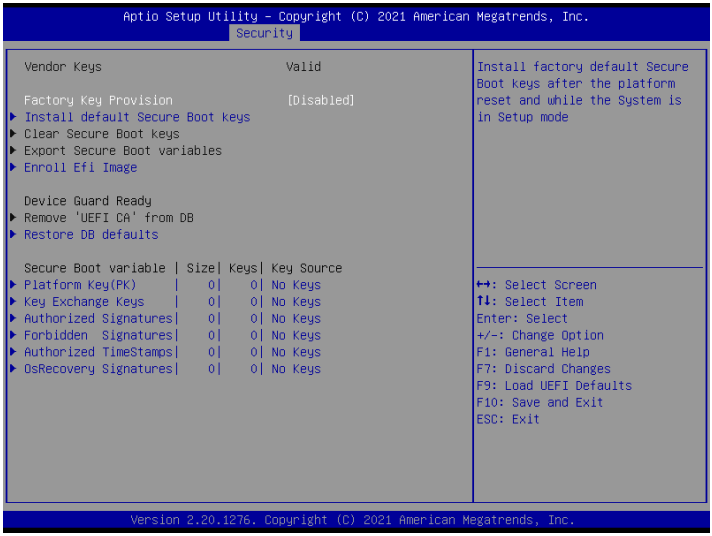

Factory Key Provision

Allow to provision factory default Secure Boot keys when System is in Setup Mode.

Install Default Secure Boot Keys

Please install default secure boot keys if it's the first time you use secure boot.

Enroll Efi Image

Allow the image to run in Secure Boot mode. Enroll SHA256 hash of the binary into Authorized Signature Database (db).

Restore DB Defaults

Restore DB variable to factory defaults.

Platform Key(PK)

Enroll Factory Defaults or load certificates from a file:

1. Public Key Certificate:

a) EFI_SIGNATURE_LIST

b) EFI_CERT_X509 (DER)

c) EFI_CERT_RSA2048 (bin)

d) EFI_CERT_SHAXXX

2. Authenticated UEFI Variable

3. EFI PE/COFF Image(SHA256)

Key Source: Default, External, Mixed

Key Exchange Keys

Enroll Factory Defaults or load certificates from a file:

1. Public Key Certificate:

a) EFI_SIGNATURE_LIST

b) EFI_CERT_X509 (DER)

c) EFI_CERT_RSA2048 (bin)

d) EFI_CERT_SHAXXX

2. Authenticated UEFI Variable

3. EFI PE/COFF Image(SHA256)

Key Source: Default, External, Mixed

Authorized Signatures

Enroll Factory Defaults or load certificates from a file:

1. Public Key Certificate:

a) EFI_SIGNATURE_LIST

b) EFI_CERT_X509 (DER)

c) EFI_CERT_RSA2048 (bin)

d) EFI_CERT_SHAXXX

2. Authenticated UEFI Variable

3. EFI PE/COFF Image(SHA256)

Key Source: Default, External, Mixed

Forbidden Signatures

Enroll Factory Defaults or load certificates from a file:

1. Public Key Certificate:

a) EFI_SIGNATURE_LIST

b) EFI_CERT_X509 (DER)

c) EFI_CERT_RSA2048 (bin)

d) EFI_CERT_SHAXXX

2. Authenticated UEFI Variable

3. EFI PE/COFF Image(SHA256)

Key Source: Default, External, Mixed

Authorized TimeStamps

Enroll Factory Defaults or load certificates from a file:

1. Public Key Certificate:

a) EFI_SIGNATURE_LIST

b) EFI_CERT_X509 (DER)

c) EFI_CERT_RSA2048 (bin)

d) EFI_CERT_SHAXXX

2. Authenticated UEFI Variable

3. EFI PE/COFF Image(SHA256)

Key Source: Default, External, Mixed

OsRecovery Signatures

Enroll Factory Defaults or load certificates from a file:

1. Public Key Certificate:

a) EFI_SIGNATURE_LIST

b) EFI_CERT_X509 (DER)

c) EFI_CERT_RSA2048 (bin)

d) EFI_CERT_SHAXXX

2. Authenticated UEFI Variable

3. EFI PE/COFF Image(SHA256)

Key Source: Default, External, Mixed

3.5 Boot Screen

In this section, it will display the available devices on your system for you to configure the boot settings and the boot priority.

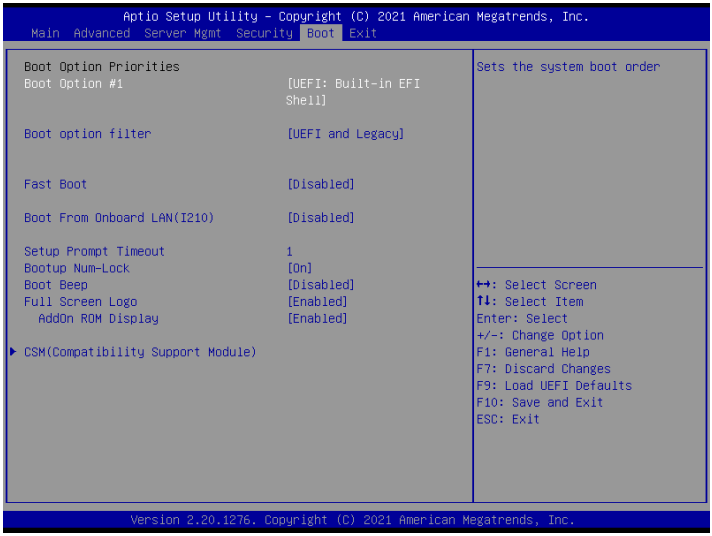

Boot Option #1

Use this item to set the system boot order.

Boot Option Filter

This option controls Legacy/UEFI ROMs priority.

Fast Boot

Enables/Disables fast boot which skips memory training and attempts to boot using last known good configuration.

Boot From Onboard LAN(I210)

Use this item to enable or disable the Boot From Onboard LAN feature.

Setup Prompt Timeout

Configure the number of seconds to wait for the UEFI setup utility.

Bootup Num-Lock

If this item is set to [On], it will automatically activate the Numeric Lock function after boot-up.

Boot Beep

Select whether the Boot Beep should be turned on or off when the system boots up. Please note that a buzzer is needed.

Full Screen Logo

Use this item to enable or disable OEM Logo. The default value is [Enabled].

AddOn ROM Display

Use this option to adjust AddOn ROM Display. If you enable the option “Full Screen Logo” but you want to see the AddOn ROM information when the system boots, please select [Enabled]. Configuration options: [Enabled] and [Disabled]. The default value is [Enabled].

3.5.1 CSM Parameters

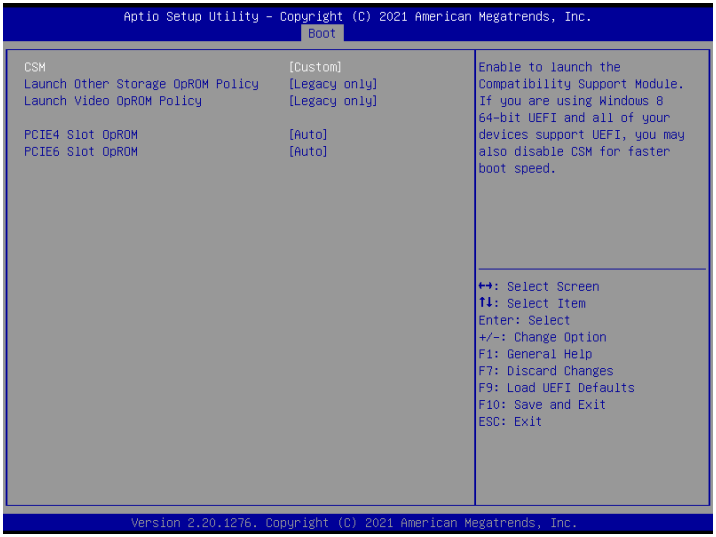

CSM

Enable to launch the Compatibility Support Module. Please do not disable unless you're running a WHCK test. If you are using Windows Server 2012 R2 or later versions 64-bit UEFI and all of your devices support UEFI, you may also disable CSM for faster boot speed.

Launch Other Storage OpROM Policy

Select UEFI only to run those that support UEFI option ROM only. Select Legacy only to run those that support legacy option ROM only. Select Do not launch to not execute both legacy and UEFI option ROM.

Launch Video OpROM Policy

Select UEFI only to run those that support UEFI option ROM only. Select Legacy only to run those that support legacy option ROM only. Select Do not launch to not execute both legacy and UEFI option ROM.

PCIE4 Slot OpROM

This option controls Legacy/UEFI ROMs priority.

PCIE6 Slot OpROM

This option controls Legacy/UEFI ROMs priority.

3.6 Exit Screen

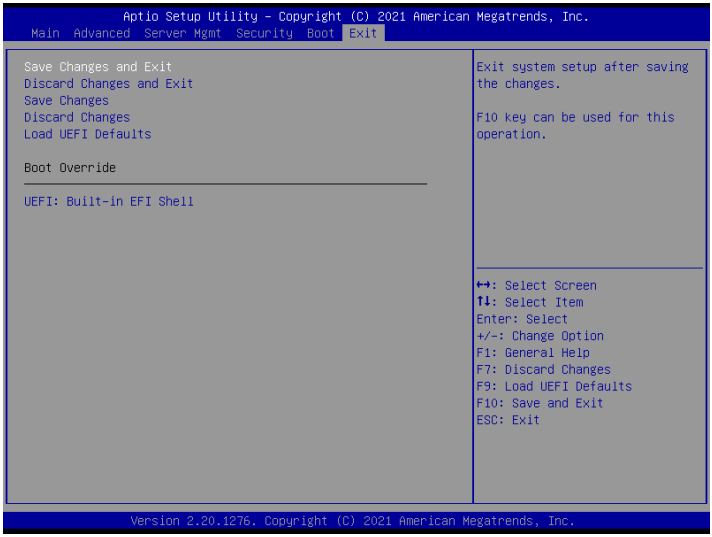

Save Changes and Exit

When you select this option, the following message “Save configuration changes and exit setup?” will pop-out. Press <F10> key or select [Yes] to save the changes and exit the UEFI SETUP UTILITY.

Discard Changes and Exit

When you select this option, the following message “Discard changes and exit setup?” will pop-out. Press <ESC> key or select [Yes] to exit the UEFI SETUP UTILITY without saving any changes.

Discard Changes

When you select this option, the following message “Discard changes?” will pop-out. Press <F7> key or select [Yes] to discard all changes.

Load UEFI Defaults

Load UEFI default values for all the setup questions. F9 key can be used for this operation.

Boot Override

These items displays the available devices. Select an item to start booting from the selected device.

Chapter 4 Software Support

4.1 Install Operating System

This motherboard supports various Microsoft® Windows® / Linux compliant. Because motherboard settings and hardware options vary, use the setup procedures in this chapter for general reference only. Refer to your OS documentation for more information.

**Please download the Intel® SATA Floppy Image driver from the ASRock Rack's website (www.asrockrack.com) to your USB drive or simply install the SATA driver from the Support CD while installing OS in SATA RAID mode.*

4.2 Support CD Information

The Support CD that came with the motherboard contains necessary drivers and useful utilities that enhance the motherboard's features.

4.2.1 Running The Support CD

To begin using the support CD, insert the CD into your CD-ROM drive. The CD automatically displays the Main Menu if "AUTORUN" is enabled in your computer. If the Main Menu does not appear automatically, locate and double click on the file "ASRSetup.exe" from the root folder in the Support CD to display the menu.

4.2.2 Drivers Menu

The Drivers Menu shows the available device's drivers if the system detects installed devices. Please install the necessary drivers to activate the devices.

4.2.3 Utilities Menu

The Utilities Menu shows the application softwares that the motherboard supports. Click on a specific item then follow the installation wizard to install it.

4.2.4 Contact Information

If you need to contact ASRock Rack or want to know more about ASRock Rack, welcome to visit ASRock Rack's website at http://www.ASRockRack.com; or you may contact your dealer for further information.

Chapter 5 Troubleshooting

5.1 Troubleshooting Procedures

Follow the procedures below to troubleshoot your system.

Always unplug the power cord before adding, removing or changing any hardware components. Failure to do so may cause physical injuries to you and damages to motherboard components.

1. Disconnect the power cable and check whether the PWR LED is off.
2. Unplug all cables, connectors and remove all add-on cards from the motherboard. Make sure that the jumpers are set to default settings.
3. Confirm that there are no short circuits between the motherboard and the chassis.
4. Install a CPU and fan on the motherboard, then connect the chassis speaker and power LED.

If there is no power...

1. Confirm that there are no short circuits between the motherboard and the chassis.
2. Make sure that the jumpers are set to default settings.
3. Check the settings of the 115V/230V switch on the power supply.
4. Verify if the battery on the motherboard provides ~3VDC. Install a new battery if it does not.

If there is no video...

1. Try replugging the monitor cables and power cord.
2. Check for memory errors.

If there are memory errors...

1. Verify that the DIMM modules are properly seated in the slots.
2. Use recommended DDR4 ECC/UDIMMs.
3. If you have installed more than one DIMM modules, they should be identical with the same brand, speed, size and chip-type.
4. Try inserting different DIMM modules into different slots to identify faulty ones.
5. Check the settings of the 115V/230V switch on the power supply.

Unable to save system setup configurations...

1. Verify if the battery on the motherboard provides ~3VDC. Install a new battery if it does not.
2. Confirm whether your power supply provides adaquate and stable power.

Other problems...

1. Try searching keywords related to your problem on ASRock Rack's FAQ page: http://www.asrockrack.com/support

5.2 Technical Support Procedures

If you have tried the troubleshooting procedures mentioned above and the problems are still unsolved, please contact ASRock Rack's technical support with the following information:

1. Your contact information
2. Model name, BIOS version and problem type.
3. System configuration.
4. Problem description.

You may contact ASRock Rack's technical support at:
http://www.asrockrack.com/support/tsd.asp

5.3 Returning Merchandise for Service

For warranty service, the receipt or a copy of your invoice marked with the date of purchase is required. By calling your vendor or going to our RMA website (http://event.asrockrack.com/tsd.asp) you may obtain a Returned Merchandise Authorization (RMA) number.
The RMA number should be displayed on the outside of the shipping carton which is mailed prepaid or hand-carried when you return the motherboard to the manufacturer. Shipping and handling charges will be applied for all orders that must be mailed when service is complete.

This warranty does not cover damages incurred in shipping or from failure due to alteration, misuse, abuse or improper maintenance of products.

Contact your distributor first for any product related problems during the warranty period.