BLANCO

BLANCO TIVO ND



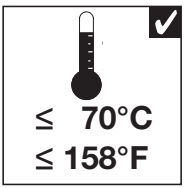

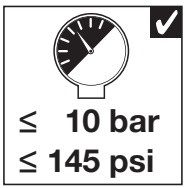

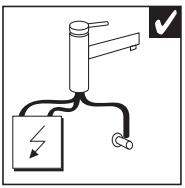



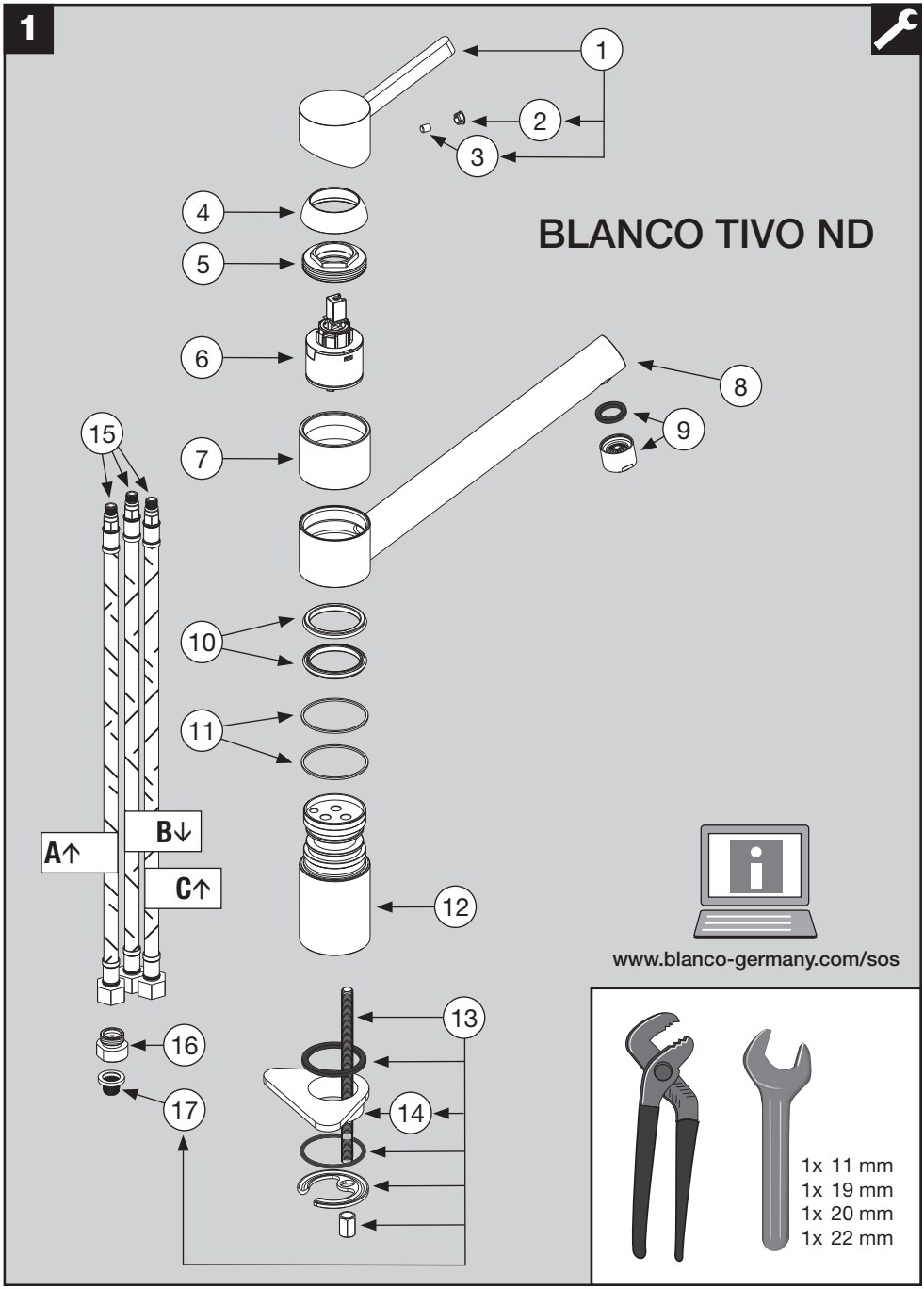
1
BLANCO TIVO ND
1
2
3
4
5
6
7
8
9
10
11
12
13
14
15
16
17
A↑
B↓
C↑
www.blanco-germany.com/sos
1x 11 mm
1x 19 mm
1x 20 mm
1x 22 mm

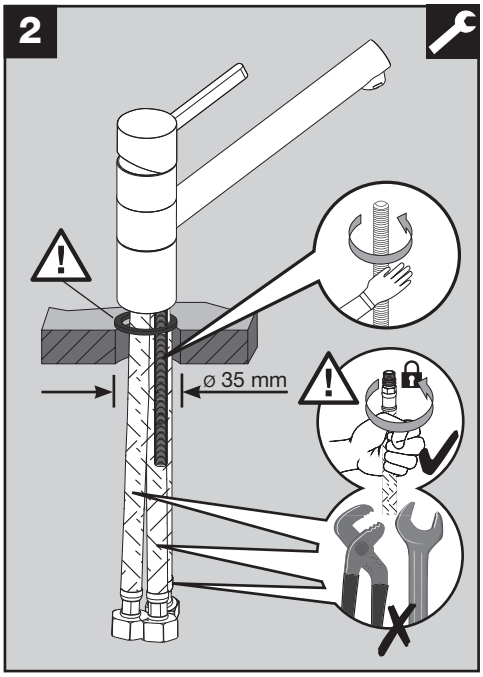
2
ø 35 mm

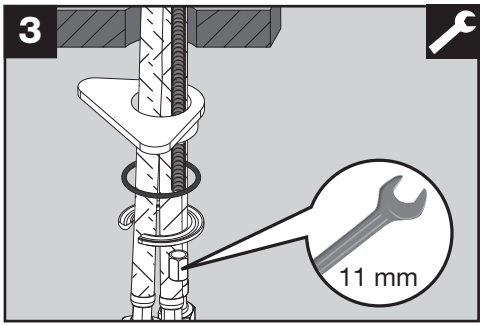
3
11 mm

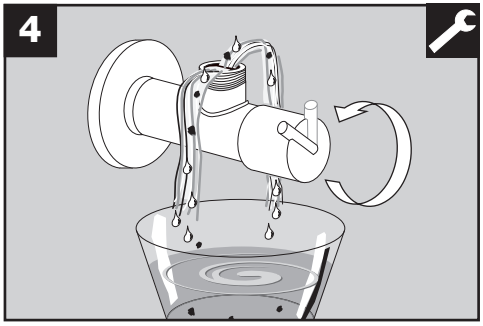
4

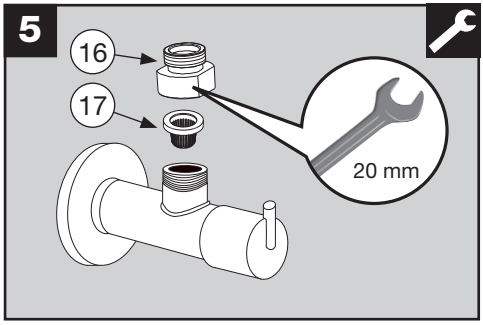
5
16
17
20 mm

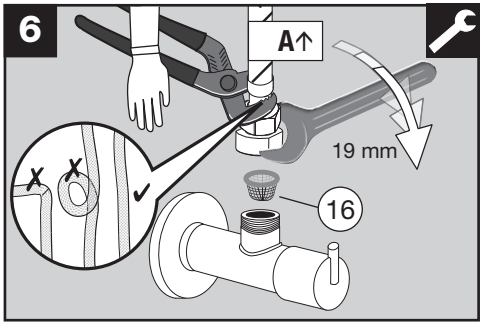
6
A↑
19 mm
16

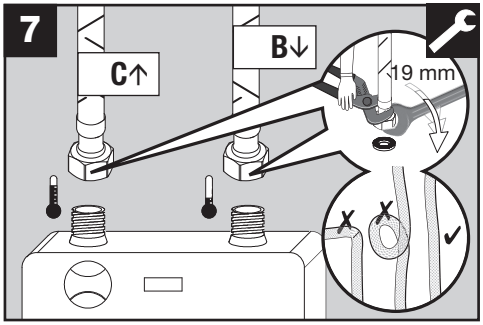
7
C↑
B↓
19 mm

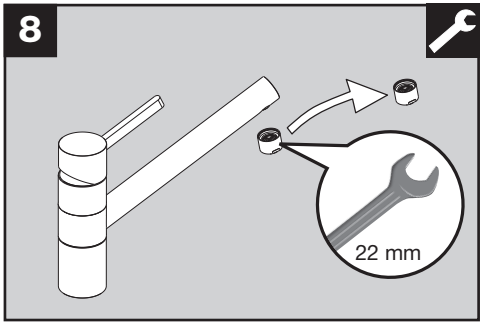
8
22 mm

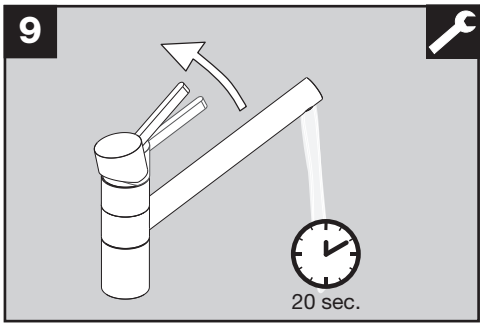

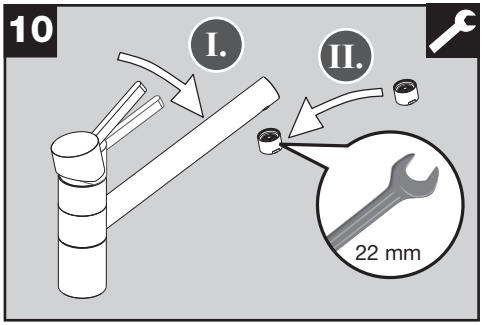

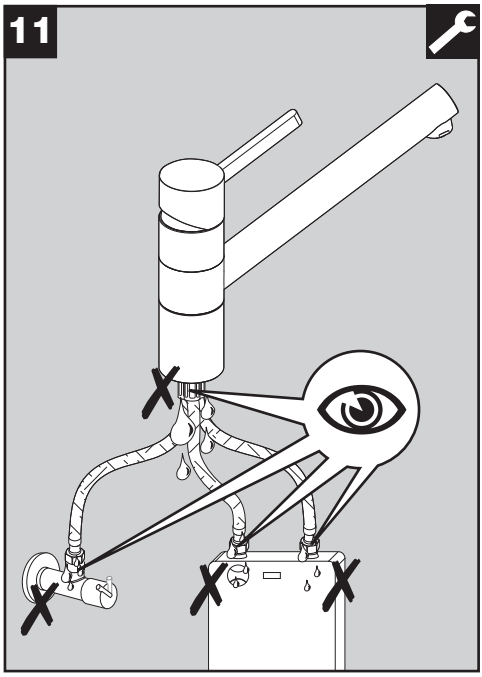



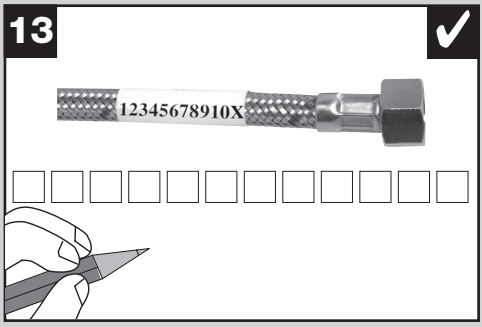

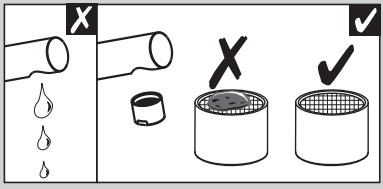

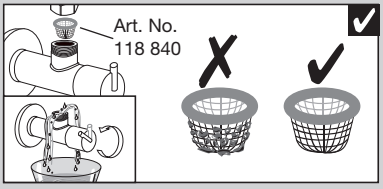

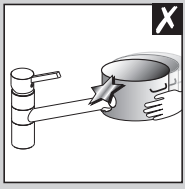

BLANCO GmbH + Co KG · Service · Tel.: +49 800 4 48 10 02
info@blanco-germany.com · www.blanco-germany.com