MAG Series

LCD Monitor

MAG 274QPF E20 (3CF6)
MAG 274QRFW E20 (3CF9)

User Guide

Contents

Getting Started 3
- Package Contents 3
- Installing the Monitor Stand 4
- Adjusting the Monitor 5
- Monitor Overview 6
- Connecting the Monitor to PC 8

OSD Setup 9
- Navi Key 9
- Hot Key 9

OSD Menus 10
- Gaming 11
- Professional 14
- Image 15
- Input Source 15
- PIP/PBP 16
- Navi Key 17
- Settings 17

Specifications 19

Preset Display Modes 21

Troubleshooting 27

Safety Instructions 28

TÜV Rheinland Certification 30

Regulatory Notices 31

Revision

V1.0, 2025/08

Getting Started

This chapter provides you with the information on hardware setup procedures. While connecting devices, be careful in holding the devices and use a grounded wrist strap to avoid static electricity.

Package Contents

Monitor	**MAG 274QPF E20** **MAG 274QRFW E20**
Documentation	Quick Start Guide
Accessories	Stand with Screws
	Stand Base with Screw
	Power Cord
Cable	DisplayPort Cable

Important

- *Contact your place of purchase or local distributor if any of the items is damaged or missing.*
- *Package contents may vary by country and model.*
- *The included power cord is exclusively for this monitor and should not be used with other products.*

Installing the Monitor Stand

1. Leave the monitor in its protective packaging. Position the stand bracket on the monitor, ensuring the screw holes are aligned.
2. Tighten the stand bracket with screws.
3. Connect the base to the stand and tighten the base screw to secure the base.
4. Make sure the stand assembly is properly installed before setting the monitor upright.

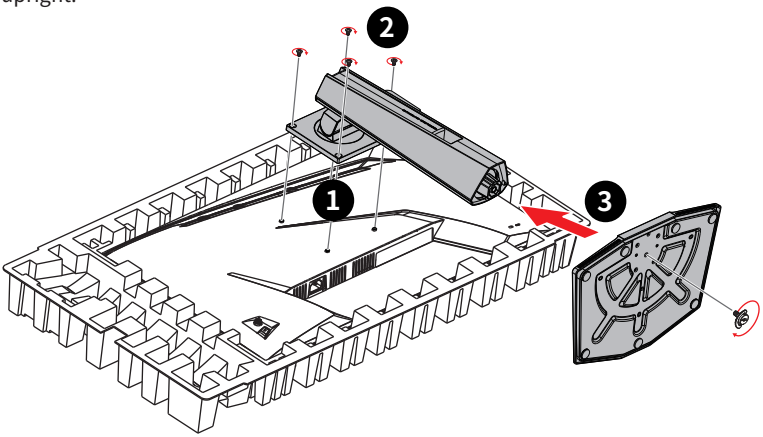

Important

- *Place the monitor on a soft, protected surface to avoid scratching the display panel.*
- *Do not use any sharp objects on the panel.*
- *This product comes with NO protective film to be removed by the user! Any mechanical damages to the product including removal of the polarizing film may affect the warranty!*

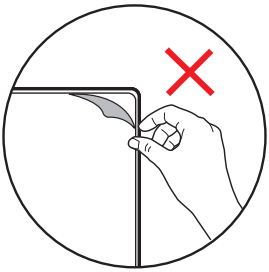

Adjusting the Monitor

This monitor is designed to maximize your viewing comfort with its adjustment capabilities.

Important

- *Avoid touching the display panel when adjusting the monitor.*
- *Please slightly tilt the monitor backwards before pivoting it.*

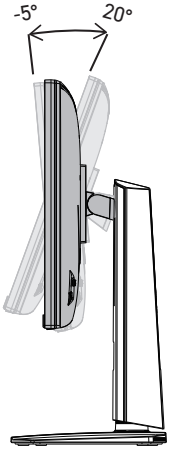

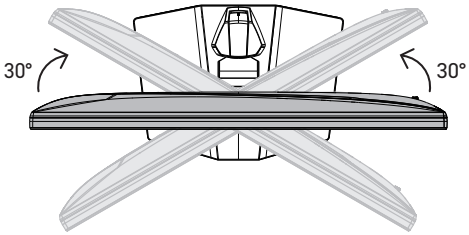

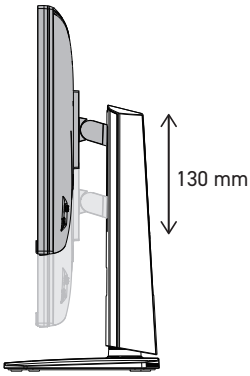

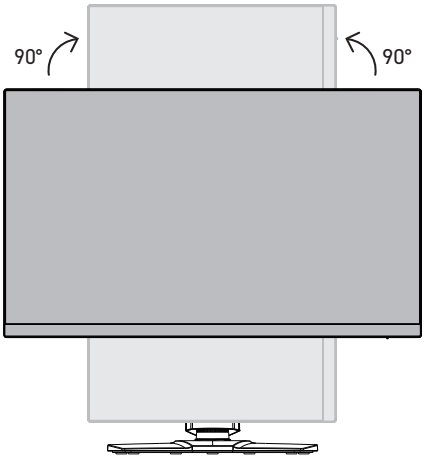

Monitor Overview

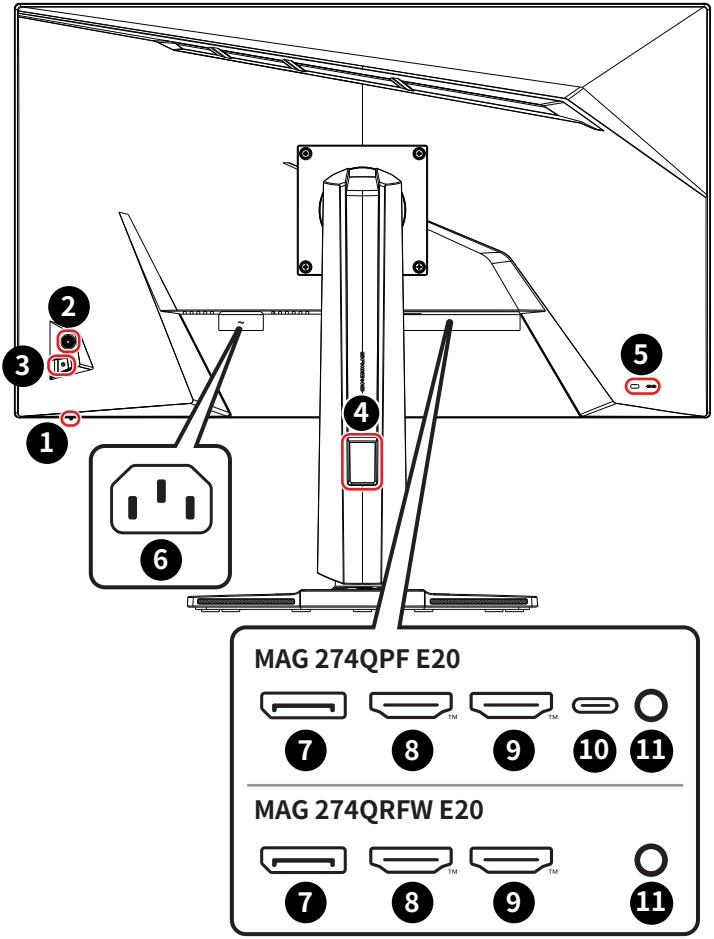

1	**Power LED** Lit in white after the monitor is turned on. If no signal input, the LED will turn into orange. Lit in orange when the monitor is in Stand-by mode.
2	**Navi Key**
3	**Power Button**

4	**Cable Routing Hole**
5	**Kensington Lock**
6	**Power Jack**
7	**DisplayPort** Supports 2560x1440@200Hz as specified in DisplayPort 1.4a (HBR3).
8	**HDMI™ Connector** Supports HDMI™ CEC, 2560x1440@144Hz as specified in HDMI™ 2.0b. ***Important*** *To ensure optimal performance and compatibility, please use only HDMI™ cables certified with the official HDMI™ logo when connecting this monitor. For more information, please visit https://www.hdmi.org/resource/cables.*
9	**HDMI™ Connector** Supports 2560x1440@144Hz as specified in HDMI™ 2.0b. ***Important*** *To ensure optimal performance and compatibility, please use only HDMI™ cables certified with the official HDMI™ logo when connecting this monitor. For more information, please visit https://www.hdmi.org/resource/cables.*
10	**USB Type-C Port** This port supports DisplayPort Alternate (DP Alt) Mode and up to 5V/3A (15W) power delivery. ***Important*** *Your USB-C signal source and cable must support DisplayPort Alternate Mode to enable video output to the monitor.*
11	**Headphone Jack**

Connecting the Monitor to PC

1. Turn off your computer.
2. Connect the video cable from the monitor to your computer.
3. Connect the power cord to the monitor power jack. (Figure A)
4. Plug the power cord into the electrical outlet. (Figure B)
5. Turn on the monitor. (Figure C)
6. Power on the computer and the monitor will auto detect the signal source.

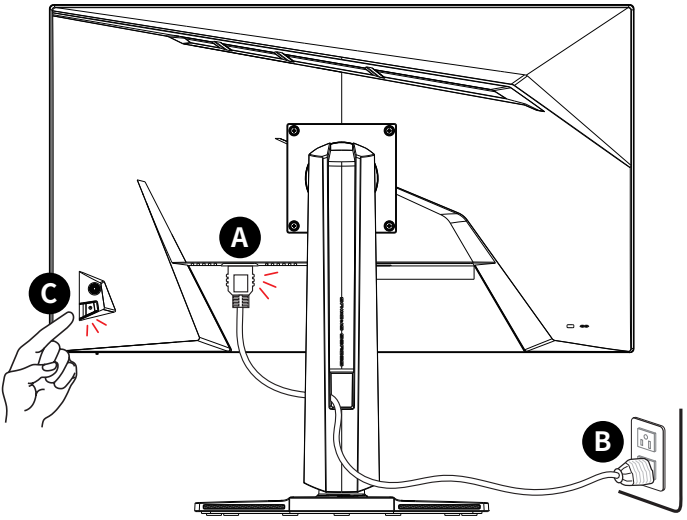

OSD Setup

This chapter provides you with essential information on OSD Setup.

Important

All information is subject to change without prior notice.

Navi Key

The monitor comes with a Navi Key, a multi-directional control that helps navigate the On-Screen Display (OSD) menu.

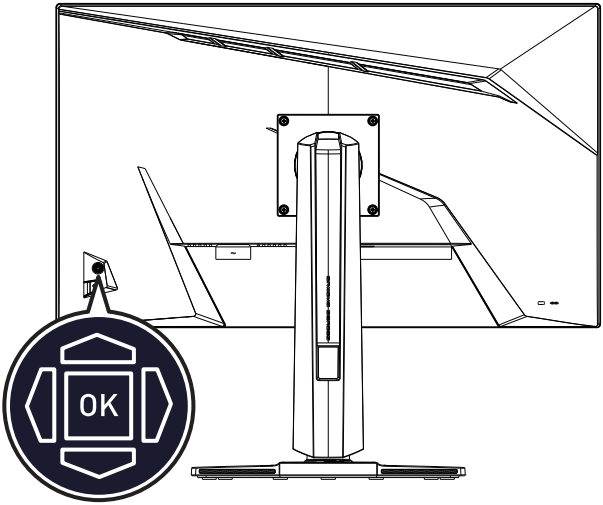

Up/Down/Left/Right:

- selecting function menus and items
- adjusting function values
- entering into/exiting from function menus

Press (OK):

- launching the On-Screen Display (OSD)
- entering submenus
- confirming a selection or setting

Hot Key

- Users may enter into preset function menus by moving the Navi Key up, down, left or right when the OSD menu is inactive.
- Users may customize their own Hot Keys to enter into different function menus.

OSD Menus

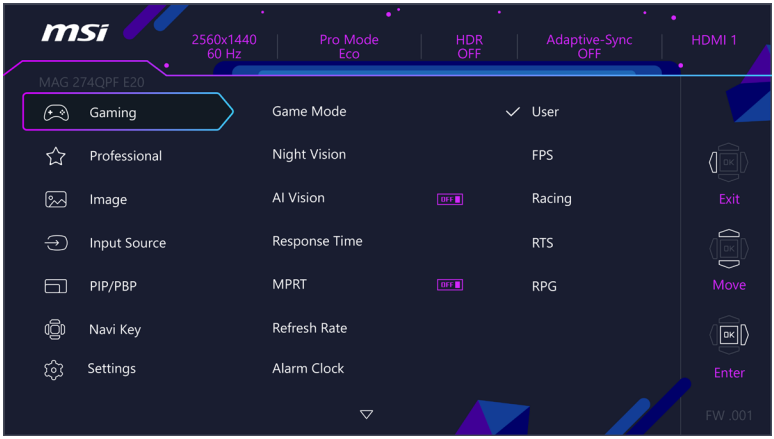

Important

The following settings will be grayed out when HDR signals are received:

- *Night Vision*
- *AI Vision*
- *MPRT*
- *Low Blue Light*
- *HDCR*
- *Brightness*
- *Contrast*
- *Color Temperature*
- *PIP/PBP*
- *sRGB, Display P3*

Gaming

<table>
<tr><th>1st Level Menu</th><th>2nd/3rd Level Menu</th><th>Description</th></tr>
<tr><td rowspan="5">Game Mode</td><td>User</td><td rowspan="5">• Use Up or Down Button to select and preview mode effects.
• Press the OK Button to confirm and apply your mode type.</td></tr>
<tr><td>FPS</td></tr>
<tr><td>Racing</td></tr>
<tr><td>RTS</td></tr>
<tr><td>RPG</td></tr>
<tr><td rowspan="5">Night Vision</td><td>OFF</td><td rowspan="5">• This function optimizes background brightness and is recommended for FPS games.</td></tr>
<tr><td>Normal</td></tr>
<tr><td>Strong</td></tr>
<tr><td>Strongest</td></tr>
<tr><td>A.I.</td></tr>
<tr><td rowspan="2">AI Vision</td><td>OFF</td><td rowspan="2">• AI Vision enhances image quality by optimizing the contrast of images and background brightness.
• Activating AI Vision will affect:
<table>
<tr><th>Affected Function</th><th>Function Status</th></tr>
<tr><td>» Night Vision
» Brightness
» HDCR</td><td>Unable to select</td></tr>
<tr><td>» MPRT</td><td>Set to OFF</td></tr>
</table></td></tr>
<tr><td>ON</td></tr>
<tr><td rowspan="3">Response Time</td><td>Normal</td><td rowspan="3">• Setting to Fastest will reach the shortest response time and help improve blurred images when playing very fast games.</td></tr>
<tr><td>Fast</td></tr>
<tr><td>Fastest</td></tr>
<tr><td rowspan="2">MPRT</td><td>OFF</td><td rowspan="2">• MPRT is available when the refresh rate is over 85Hz.
• Activating MPRT will affect:
<table>
<tr><th>Affected Function</th><th>Function Status</th></tr>
<tr><td>» Response Time
» Brightness</td><td>Unable to select</td></tr>
<tr><td>» Adaptive-Sync
» HDCR
» PIP/PBP
» AI Vision</td><td>Set to OFF</td></tr>
<tr><td>» Screen Size 1:1</td><td>Set to Auto</td></tr>
</table></td></tr>
<tr><td>ON</td></tr>
</table>

1st Level Menu	2nd/3rd Level Menu		Description
Refresh Rate	Location	Left Top	• Location is adjustable in OSD Menu. Press the OK Button to confirm and apply your Refresh Rate Location. • This monitor follows and works at the Operating System' s preset Screen Refresh Rate.
		Right Top	
		Left Bottom	
		Right Bottom	
		Customize	
	OFF		
	ON		
Alarm Clock	Location	Left Top	• After setting the time, press the OK Button to activate the timer. • Users have to manually restore their preset Alarm Clock after any AC power loss and reconnection.
		Right Top	
		Left Bottom	
		Right Bottom	
		Customize	
	OFF		
	15:00	00:01 ~ 99:59	
	30:00		
	45:00		
	60:00		
Smart Crosshair	Icon	None	• Through AI algorithm, this function enhances the visibility of in-game crosshair. • Users can select the color and position of the crosshair.
	Color	White	
		Red	
		Auto	
	Position		
	Reset		

<table>
<tr><th>1st Level Menu</th><th>2nd/3rd Level Menu</th><th>Description</th></tr>
<tr><td rowspan="2">Adaptive-Sync</td><td>OFF</td><td rowspan="2">• Adaptive-Sync prevents screen tearing.
• When Adaptive-Sync is set to ON, it is mandatory to enable HDMI™ VRR.
• Activating Adaptive-Sync will affect:
<table><tr><th>Affected Function</th><th>Function Status</th></tr><tr><td>» PIP/PBP
» MPRT</td><td>Set to OFF</td></tr><tr><td>» Screen Size 1:1</td><td>Set to Auto</td></tr></table></td></tr>
<tr><td>ON</td></tr>
<tr><td rowspan="2">HDMI™ Console Mode</td><td>OFF</td><td rowspan="2">• The Console mode offers broader compatibility with more console devices.
• The 2160P video resolution will be enabled when HDMI™ Console Mode is turned ON.
• Activating HDMI™ Console Mode will affect:
<table><tr><th>Affected Function</th><th>Function Status</th></tr><tr><td>» PIP/PBP</td><td>Unable to select</td></tr></table></td></tr>
<tr><td>ON</td></tr>
</table>

Professional

<table>
<tr><th>1st Level Menu</th><th>2nd Level Menu</th><th>Description</th></tr>
<tr><td rowspan="7">Pro Mode</td><td>Eco</td><td rowspan="7">• Use Up or Down Button to select and preview mode effects.
• Press the OK Button to confirm and apply your mode type.
• Activating sRGB and Display P3 will affect:
<table><tr><th>Affected Function</th><th>Function Status</th></tr><tr><td>» Color Temperature
» Low Blue Light
» Contrast</td><td>Unable to select</td></tr></table></td></tr>
<tr><td>User</td></tr>
<tr><td>Anti-Blue</td></tr>
<tr><td>Movie</td></tr>
<tr><td>Office</td></tr>
<tr><td>sRGB</td></tr>
<tr><td>Display P3</td></tr>
<tr><td rowspan="2">Low Blue Light</td><td>OFF</td><td rowspan="2">• Low Blue Light protects your eyes against blue light. When enabled, Low Blue Light adjusts the screen color temperature to a more yellow glow.
• When Pro Mode is set to Anti-Blue, it is mandatory to enable Low Blue Light.</td></tr>
<tr><td>ON</td></tr>
<tr><td rowspan="2">HDCR</td><td>OFF</td><td rowspan="2">• HDCR enhances image quality by increasing the contrast of images.
• Activating HDCR will affect:
<table><tr><th>Affected Function</th><th>Function Status</th></tr><tr><td>» Brightness</td><td>Unable to select</td></tr><tr><td>» MPRT</td><td>Set to OFF</td></tr></table></td></tr>
<tr><td>ON</td></tr>
<tr><td rowspan="2">MPRT</td><td>OFF</td><td rowspan="2">• MPRT is available when the refresh rate is over 85Hz.
• Activating MPRT will affect:
<table><tr><th>Affected Function</th><th>Function Status</th></tr><tr><td>» Response Time
» Brightness</td><td>Unable to select</td></tr><tr><td>» Adaptive-Sync
» HDCR
» PIP/PBP
» AI Vision</td><td>Set to OFF</td></tr><tr><td>» Screen Size 1:1</td><td>Set to Auto</td></tr></table></td></tr>
<tr><td>ON</td></tr>
<tr><td rowspan="5">Image Enhancement</td><td>OFF</td><td rowspan="5">• Image Enhancement enhances image edges to improve their acutance.</td></tr>
<tr><td>Weak</td></tr>
<tr><td>Medium</td></tr>
<tr><td>Strong</td></tr>
<tr><td>Strongest</td></tr>
</table>

Image

<table>
<tr><th>1st Level Menu</th><th colspan="2">2nd/3rd Level Menu</th><th>Description</th></tr>
<tr><td>Brightness</td><td colspan="2">0-100</td><td>• Properly adjust Brightness according to the surrounding lighting.</td></tr>
<tr><td>Contrast</td><td colspan="2">0-100</td><td>• Properly adjust Contrast to relax your eyes.</td></tr>
<tr><td>Sharpness</td><td colspan="2">0-5</td><td>• Sharpness improves clarity and details of images.</td></tr>
<tr><td rowspan="6">Color Temperature</td><td colspan="2">Cool</td><td rowspan="6">• Use Up or Down Button to select and preview mode effects.
• Press the OK Button to confirm and apply your mode type.
• Users can adjust Color Temperature in Customization mode.</td></tr>
<tr><td colspan="2">Normal</td></tr>
<tr><td colspan="2">Warm</td></tr>
<tr><td rowspan="3">Customization</td><td>R (0-100)</td></tr>
<tr><td>G (0-100)</td></tr>
<tr><td>B (0-100)</td></tr>
<tr><td rowspan="4">Screen Size</td><td colspan="2">Auto</td><td rowspan="4">• Users can adjust Screen Size in any mode, any resolution and any screen refresh rate.
• Activating Screen Size 1:1 will affect:
<table><tr><th>Affected Function</th><th>Function Status</th></tr><tr><td>» PIP/PBP</td><td>Set to OFF</td></tr></table>
Important
Screen Size 1:1 refers to displaying content at its original resolution. This option is disabled when the monitor is set to its native resolution.</td></tr>
<tr><td colspan="2">4:3</td></tr>
<tr><td colspan="2">16:9</td></tr>
<tr><td colspan="2">1:1</td></tr>
<tr><td rowspan="2">Local Dimming</td><td colspan="2">OFF</td><td rowspan="2">• This setting helps enhance the overall picture quality of dark scenes by dimming backlight zones to improve the contrast ratio in dark scenes.
• Enabling Local Dimming will affect visibility of mini OSD, such as Info. On Screen, Refresh Rate, Alarm Clock, Smart Crosshair, etc.</td></tr>
<tr><td colspan="2">ON</td></tr>
</table>

Input Source

<table>
<tr><th>1st Level Menu</th><th>2nd Level Menu</th><th>Description</th></tr>
<tr><td colspan="2">HDMI™ 1</td><td rowspan="4">• Users can adjust Input Source in any mode.</td></tr>
<tr><td colspan="2">HDMI™ 2</td></tr>
<tr><td colspan="2">DP</td></tr>
<tr><td colspan="2">Type C (MAG 274QPF E20)</td></tr>
<tr><td rowspan="2">Auto Scan</td><td>OFF</td><td rowspan="2">• Users can use the Navi Key to select Input Source at below status:
• While “Auto Scan” is set to “OFF” with the monitor at power saving mode;
• While “No Signal” message box is shown on the monitor.</td></tr>
<tr><td>ON</td></tr>
</table>

PIP/PBP

<table>
<tr><th>1st Level Menu</th><th colspan="2">2nd/3rd Level Menu</th><th>Description</th></tr>
<tr><td colspan="3">OFF</td><td rowspan="19">• PIP (Picture in Picture) allows users to simultaneously display multiple video sources on one screen. One program is displayed on the full screen at the same time as one or more other programs are displayed in inset windows.
• PBP (Picture by Picture) is a similar feature that displays two input sources side-by-side on the screen.
• Display Switch allows users to switch between primary and secondary input sources.
• If there is only one signal input, the Display Switch and Audio Switch will be grayed out.
• Activating PIP/PBP will affect:
<table>
<tr><th>Affected Function</th><th>Function Status</th></tr>
<tr><td>» Response Time</td><td>Unable to select</td></tr>
<tr><td>» Adaptive-Sync</td><td>Set to OFF</td></tr>
<tr><td>» MPRT
» HDMI™ CEC
» HDMI™ Console Mode</td><td>Set to OFF & unable to select</td></tr>
<tr><td>» PIP: Screen Size 1:1
» PBP: Screen Size</td><td>Set to Auto & unable to select</td></tr>
</table></td></tr>
<tr><td rowspan="9">PIP</td><td rowspan="4">Source</td><td>HDMI™ 1</td></tr>
<tr><td>HDMI™ 2</td></tr>
<tr><td>DP</td></tr>
<tr><td>Type C (MAG 274QPF E20)</td></tr>
<tr><td rowspan="3">PIP Size</td><td>Small</td></tr>
<tr><td>Medium</td></tr>
<tr><td>Large</td></tr>
<tr><td rowspan="5">Location</td><td>Left Top</td></tr>
<tr><td>Right Top</td></tr>
<tr><td>Left Bottom</td></tr>
<tr><td>Right Bottom</td></tr>
<tr><td>Customize</td></tr>
<tr><td colspan="2">Display Switch</td></tr>
<tr><td colspan="2">Audio Switch</td></tr>
<tr><td rowspan="10">PBP</td><td colspan="2">Customize</td></tr>
<tr><td rowspan="4">Source 1</td><td>HDMI™ 1</td></tr>
<tr><td>HDMI™ 2</td></tr>
<tr><td>DP</td></tr>
<tr><td>Type C (MAG 274QPF E20)</td></tr>
<tr><td rowspan="4">Source 2</td><td>HDMI™ 1</td></tr>
<tr><td>HDMI™ 2</td></tr>
<tr><td>DP</td></tr>
<tr><td>Type C (MAG 274QPF E20)</td></tr>
<tr><td colspan="2">Display Switch</td></tr>
<tr><td colspan="2">Audio Switch</td></tr>
</table>

Navi Key

1st Level Menu	2nd Level Menu	Description
Up Down Left Right	OFF	• All Navi Key items can be adjusted via OSD Menus.
	Brightness	
	Game Mode	
	Smart Crosshair	
	Alarm Clock	
	Input Source	
	PIP/PBP Mode	
	Refresh Rate	
	Info. On Screen	
	Night Vision	

Settings

1st Level Menu	2nd Level Menu	Description
Language	繁體中文	• Users have to press the OK Button to confirm and apply the Language setting. • Language is an independent setting. Users' own language setting will override the factory default. When users set Reset to Yes, Language will not be changed.
	English	
	Français	
	Deutsch	
	Italiano	
	Español	
	한국어	
	日本語	
	Русский	
	Português	
	简体中文	
	Bahasa Indonesia	
	Türkçe	
	(More languages coming soon)	
Transparency	0~5	• Users can adjust Transparency in any mode.
OSD Time Out	5~30s	• Users can adjust OSD Time Out in any mode.
RGB LED (MAG 274QRFW E20)	OFF	• Users can turn the RGB LED on or off.
	ON	

1st Level Menu	2nd Level Menu	Description
Power Button	OFF	• When set to OFF, users can press the power button to turn off the monitor.
	Standby	• When set to Standby, users can press the power button to turn off the panel and backlight.
Info. On Screen	OFF	• The information of the monitor status will be shown on the right side of the screen.
	ON	

HDMI™ CEC	OFF	• HDMI™ CEC (Consumer Electronics Control) supports Sony PlayStation®, Nintendo® Switch™, Xbox Series X|S consoles and various audio-visual devices that are CEC-capable.
		• If HDMI™ CEC is set to ON:
		  • The monitor will automatically power on when the CEC device is turned on.
		  • The CEC device will enter power saving mode when the monitor is turned off.
		  • When Sony PlayStation®, Nintendo® Switch™, or Xbox Series X|S console is connected, Game Mode and Pro Mode will be automatically set to default modes and can be adjusted to users' preferred modes later.

	ON	
Type C PD Charge (MAG 274QPF E20)	OFF	• This function enables users to charge their devices through a USB Type-C connector.
	ON	
Reset	YES	• Users can Reset and restore settings to original OSD Default in any mode.
	NO	

Specifications*

Monitor	MAG 274QPF E20	MAG 274QRFW E20
Size	27 inch	
Curvature	Flat	
Panel Type	Rapid IPS	
Resolution	2560 x 1440 (WQHD)	
Aspect Ratio	16:9	
SDR Brightness (nits)	300	
Contrast Ratio	1000：1	
Refresh Rate (Maximum)	200Hz	
Response Time	• GTG: 0.5ms (Min.)	
I/O	• 1 x DisplayPort • 2 x HDMI™ Connector • 1 x USB Type-C Port • 1 x Headphone Jack	• 1 x DisplayPort • 2 x HDMI™ Connector • 1 x Headphone Jack
View Angles	178°(H) , 178°(V)	
DCI-P3** / sRGB	95% / 124%	
Surface Treatment	Anti-glare	
Display Colors	1.07B, 10 bits (8 bits + FRC)	
Monitor Power Options	100-240V~, 50/60Hz, 1.5A (Max)	
Power Consumption (Typical)	• Power On < 65W • Standby < 0.5W • Power Off < 0.3W	
Adjustment (Height)	0 ~ 130 mm	
Adjustment (Tilt)	-5° ~ 20°	
Adjustment (Swivel)	-30° ~ 30°	
Adjustment (Pivot)	-90° ~ 90°	
Kensington Lock	Yes	

Monitor		MAG 274QPF E20	MAG 274QRFW E20

VESA Mounting		• Plate Type: 100 x 100 mm
		• Screw Type: M4 x 10 mm
		  • Thread Diameter: 4 mm
		  • Thread Pitch: 0.7 mm
		  • Thread Length: 10 mm	

Dimension (W x H x D)		613.3 x 406.3 x 227.9 mm	
Weight	Net	6.8 kg	6.9 kg
	Gross	9.2 kg	9.3 kg
Operating Environment		• Temperature: 0°C to 40°C • Humidity: 20% to 90%, non-condensing • Altitude: 0 ~ 5000m	
Storage Environment		• Temperature: -20°C to 60°C • Humidity: 10% to 90%, non-condensing	

* Some technical specifications of the device may be subject to change by the manufacturer. Please verify the specifications with the seller or the manufacturer' s representative.

** Based on CIE1976 test standards.

Preset Display Modes

Important

- *All information is subject to change without prior notice.*
- *HDMI™ VRR (Variable Refresh Rate) synchronizes with Adaptive-Sync (ON/ OFF). For VRR ON/OFF status, please check Adaptive-Sync.*
- *The 2160P video resolution will be enabled when HDMI™ Console Mode is turned ON.*

MAG 274QPF E20

Standard Mode (HDMI™ Console Mode OFF)

Standard	Resolution		HDMI™	DP	USB-C
VGA	640x480	@60Hz	V	V	V
		@67Hz	V	V	V
		@72Hz	V	V	V
		@75Hz	V	V	V
SVGA	800x600	@56Hz	V	V	V
		@60Hz	V	V	V
		@72Hz	V	V	V
		@75Hz	V	V	V
XGA	1024x768	@60Hz	V	V	V
		@70Hz	V	V	V
		@75Hz	V	V	V
SXGA	1280x1024	@60Hz	V	V	V
		@75Hz	V	V	V
WXGA+	1440x900	@60Hz	V	V	V
WSXGA+	1680x1050	@60Hz	V	V	V
QHD	2560x1440	@60Hz	V	V	V
		@120Hz	V	V	V
		@144Hz	V	V	V
		@165Hz		V	V
		@200Hz		V	V
Video Timing Resolution	480P		V	V	V
	576P		V	V	V
	720P		V	V	V
	1080P	@60Hz	V	V	V
		@120Hz	V	V	V
HDMI™ VRR			V		

HDMI™ Console Mode ON

Standard	Resolution		HDMI™	DP	USB-C
VGA	640x480	@60Hz	V	V	V
		@67Hz	V	V	V
		@72Hz	V	V	V
		@75Hz	V	V	V
SVGA	800x600	@56Hz	V	V	V
		@60Hz	V	V	V
		@72Hz	V	V	V
		@75Hz	V	V	V
XGA	1024x768	@60Hz	V	V	V
		@70Hz	V	V	V
		@75Hz	V	V	V
SXGA	1280x1024	@60Hz	V	V	V
		@75Hz	V	V	V
WXGA+	1440x900	@60Hz	V	V	V
WSXGA+	1680x1050	@60Hz	V	V	V
QHD	2560x1440	@60Hz	V	V	V
		@120Hz	V	V	V
		@144Hz	V	V	V
		@165Hz		V	V
		@200Hz		V	V
Video Timing Resolution	480P		V	V	V
	576P		V	V	V
	720P		V	V	V
	1080P	@60Hz	V	V	V
		@120Hz	V	V	V
	2160P	@50Hz	V		
		@60Hz	V		
HDMI™ VRR			V		

PIP Mode (Not Support HDR)

Standard	Resolution		HDMI™	DP	USB-C
Full HD	1920x1080	@60Hz		V	V
QHD	2560x1440	@60Hz	V	V	V
Video Timing Resolution	720P		V		
	1080P	@60Hz	V		

PBP Mode (Not Support HDR)

Standard	Resolution		HDMI™	DP	USB-C
Video Timing Resolution	720P		V	V	V
	1080P	@60Hz	V	V	V
Used for PBP Full Screen	1280x1440	@60Hz	V	V	V

MAG 274QRFW E20

Standard Mode (HDMI™ Console Mode OFF)

Standard	Resolution		HDMI™	DP
VGA	640x480	@60Hz	V	V
		@67Hz	V	V
		@72Hz	V	V
		@75Hz	V	V
SVGA	800x600	@56Hz	V	V
		@60Hz	V	V
		@72Hz	V	V
		@75Hz	V	V
XGA	1024x768	@60Hz	V	V
		@70Hz	V	V
		@75Hz	V	V
SXGA	1280x1024	@60Hz	V	V
		@75Hz	V	V
WXGA+	1440x900	@60Hz	V	V
WSXGA+	1680x1050	@60Hz	V	V
QHD	2560x1440	@60Hz	V	V
		@120Hz	V	V
		@144Hz	V	V
		@165Hz		V
		@200Hz		V
Video Timing Resolution	480P		V	V
	576P		V	V
	720P		V	V
	1080P	@60Hz	V	V
		@120Hz	V	V
HDMI™ VRR			V	

HDMI™ Console Mode ON

Standard	Resolution		HDMI™	DP
VGA	640x480	@60Hz	V	V
		@67Hz	V	V
		@72Hz	V	V
		@75Hz	V	V
SVGA	800x600	@56Hz	V	V
		@60Hz	V	V
		@72Hz	V	V
		@75Hz	V	V
XGA	1024x768	@60Hz	V	V
		@70Hz	V	V
		@75Hz	V	V
SXGA	1280x1024	@60Hz	V	V
		@75Hz	V	V
WXGA+	1440x900	@60Hz	V	V
WSXGA+	1680x1050	@60Hz	V	V
QHD	2560x1440	@60Hz	V	V
		@120Hz	V	V
		@144Hz	V	V
		@165Hz		V
		@200Hz		V
Video Timing Resolution	480P		V	V
	576P		V	V
	720P		V	V
	1080P	@60Hz	V	V
		@120Hz	V	V
	2160P	@50Hz	V	
		@60Hz	V	
HDMI™ VRR			V	

PIP Mode (Not Support HDR)

Standard	Resolution		HDMI™	DP
Full HD	1920x1080	@60Hz		V
QHD	2560x1440	@60Hz	V	V
Video Timing Resolution	720P		V	
	1080P	@60Hz	V	

PBP Mode (Not Support HDR)

Standard	Resolution		HDMI™	DP
Video Timing Resolution	720P		V	V
	1080P	@60Hz	V	V
Used for PBP Full Screen	1280x1440	@60Hz	V	V

Troubleshooting

The power LED is off.

- Press the monitor power button again.
- Check if the monitor power cable is properly connected.

No image.

- Check if the computer graphics card is properly installed.
- Check if the computer and monitor are connected to electrical outlets and are turned on.
- Check if the monitor signal cable is properly connected.
- The computer may be in Standby mode. Press any key to activate the monitor.

The screen image is not properly sized or centered.

- Refer to Preset Display Modes to set the computer to a setting suitable for the monitor to display.

No Plug & Play.

- Check if the monitor power cable is properly connected.
- Check if the monitor signal cable is properly connected.
- Check if the computer and graphics card are Plug & Play compatible.

The icons, font or screen are fuzzy, blurry or have color problems.

- Avoid using any video extension cables.
- Adjust brightness and contrast.
- Adjust RGB color or tune color temperature.
- Check if the monitor signal cable is properly connected.
- Check for bent pins on the signal cable connector.

The monitor starts flickering or shows waves.

- Change the refresh rate to match the capabilities of your monitor.
- Update your graphics card drivers.
- Keep the monitor away from electrical devices that may cause electromagnetic interference (EMI).

Safety Instructions

- Read the safety instructions carefully and thoroughly.
- All cautions and warnings on the device or User Guide should be noted.
- Refer servicing to qualified personnel only.

Power

- Make sure that the power voltage is within its safety range and has been adjusted properly to the value of 100~240V before connecting the device to the power outlet.
- If the power cord comes with a 3-pin plug, do not disable the protective earth pin from the plug. The device must be connected to an earthed mains socket-outlet.
- Please confirm the power distribution system in the installation site shall provide the circuit breaker rated 120/240V, 20A (maximum).
- Always disconnect the power cord or switch the wall socket off if the device would be left unused for a certain time to achieve zero energy consumption.
- Place the power cord in a way that people are unlikely to step on it. Do not place anything on the power cord.
- If this device comes with an adapter, use only the MSI provided AC adapter approved for use with this device.

Environment

- To reduce the possibility of heat-related injuries or of overheating the device, do not place the device on a soft, unsteady surface or obstruct its air ventilators.
- Use this device only on a hard, flat and steady surface.
- To prevent the device from tipping over, secure the device to a desk, wall or fixed object with an anti-tip fastener that helps to properly support the device and keep it safe in place.
- To prevent fire or shock hazard, keep this device away from humidity and high temperature.
- Do not leave the device in an unconditioned environment with a storage temperature above 60°C or below -20°C, which may damage the device.
- The maximum operating temperature is around 40°C.
- When cleaning the device, be sure to remove the power plug. Use a piece of soft cloth rather than industrial chemical to clean the device. Never pour any liquid into the opening; that could damage the device or cause electric shock.
- Always keep strong magnetic or electrical objects away from the device.

- If any of the following situations arises, get the device checked by service personnel:
  - The power cord or plug is damaged.
  - Liquid has penetrated into the device.
  - The device has been exposed to moisture.
  - The device does not work well or you can not get it working according to the User Guide.
  - The device has dropped and damaged.
  - The device has obvious sign of breakage.

TÜV Rheinland Certification

TÜV Rheinland Low Blue Light Certification

Blue light has been shown to cause eye fatigue and discomfort. MSI now offers monitors with TÜV Rheinland Low Blue Light certification to ensure users' eye comfort and well-being. Please follow the instructions below to reduce the symptoms from extended exposure to the screen and blue light.

- Place the screen 20 – 28 inches (50 – 70 cm) away from your eyes and a little below eye level.
- Consciously blinking the eyes every now and then will help to reduce eye strain after extended screen time.
- Take breaks for 20 minutes every 2 hours.
- Look away from the screen and gaze at a distant object for at least 20 seconds during breaks.
- Make stretches to relieve body fatigue or pain during breaks.
- Turn on the optional Low Blue Light function.

TÜV Rheinland Flicker Free Certification

- TÜV Rheinland has tested this product to ascertain whether the display produces visible and invisible flicker for the human eye and therefore strains the eyes of users.
- TÜV Rheinland has defined a catalogue of tests, which sets out minimum standards at various frequency ranges. The test catalogue is based on internationally applicable standards or standards common within the industry and exceeds these requirements.
- The product has been tested in the laboratory according to these criteria.
- The keyword "Flicker Free" confirms that the device has no visible and invisible flicker defined in this standard within the range of 0 - 3000 Hz under various brightness settings.
- The display will not support Flicker Free when Anti Motion Blur/MPRT is enabled. (The availability of Anti Motion Blur/MPRT varies by products.)

Regulatory Notices

CE Conformity

This product has been tested and found to comply with the harmonized standards for Information Technology Equipment published under Directives of Official Journal of the European Union.

FCC-B Radio Frequency Interference Statement

This equipment has been tested and found to comply with the limits for a Class B digital device, pursuant to Part 15 of the FCC Rules. These limits are designed to provide reasonable protection against harmful interference in a residential installation. This equipment generates, uses and can radiate radio frequency energy and, if not installed and used in accordance with the instruction manual, may cause harmful interference to radio communications. However, there is no guarantee that interference will not occur in a particular installation. If this equipment does cause harmful interference to radio or television reception, which can be determined by turning the equipment off and on, the user is encouraged to try to correct the interference by one or more of the measures listed below:

- Reorient or relocate the receiving antenna.
- Increase the separation between the equipment and receiver.
- Connect the equipment into an outlet on a circuit different from that to which the receiver is connected.
- Consult the dealer or an experienced radio/television technician for help.

Notice 1

The changes or modifications not expressly approved by the party responsible for compliance could void the user' s authority to operate the equipment.

Notice 2

Shielded interface cables and AC power cord, if any, must be used in order to comply with the emission limits.

This device complies with Part 15 of the FCC Rules. Operation is subject to the following two conditions:

1. This device may not cause harmful interference, and
2. This device must accept any interference received, including interference that may cause undesired operation.

MSI Computer Corp.

901 Canada Court, City of Industry, CA 91748, USA

(626) 913-0828

www.msi.com

WEEE Statements

European Union: This symbol on the product indicates that this product cannot be discarded as municipal waste. Instead, it is your responsibility to dispose of your waste electrical and electronic equipment by handing it over to a designated collection point for recycling. For more information about where you can drop off your waste equipment for recycling, please contact your local city office, your household waste disposal service or the shop where you purchased the product.

Chemical Substances Information

In compliance with chemical substances regulations, such as the EU REACH Regulation (Regulation EC No. 1907/2006 of the European Parliament and the Council), MSI provides the information of chemical substances in products at:
https://csr.msi.com/global/index

RoHS Statement

Japan JIS C 0950 Material Declaration

A Japanese regulatory requirement, defined by specification JIS C 0950, mandates that manufacturers provide material declarations for certain categories of electronic products offered for sale after July 1, 2006.
https://csr.msi.com/global/Japan-JIS-C-0950-Material-Declarations

India RoHS

This product complies with the “India E-waste (Management and Handling) Rule 2016” and prohibits use of lead, mercury, hexavalent chromium, polybrominated biphenyls or polybrominated diphenyl ethers in concentrations exceeding 0.1 weight % and 0.01 weight % for cadmium, except for the exemptions set in Schedule 2 of the Rule.

Turkey EEE Regulation

Conforms to the EEE Regulations of the Republic Of Turkey

Ukraine Restriction of Hazardous Substances

The equipment complies with requirements of the Technical Regulation, approved by the Resolution of Cabinet of Ministry of Ukraine as of 10 March 2017, № 139, in terms of restrictions for the use of certain dangerous substances in electrical and electronic equipment.

Vietnam RoHS

As from December 1, 2012, all products manufactured by MSI comply with Circular 30/2011/TT-BCT temporarily regulating the permitted limits for a number of hazardous substances in electronic and electric products.

Green Product Features

- Reduced energy consumption during use and stand-by
- Limited use of substances harmful to the environment and health
- Easily dismantled and recycled
- Reduced use of natural resources by encouraging recycling
- Extended product lifetime through easy upgrades
- Reduced solid waste production through take-back policy

Environmental Policy

- The product has been designed to enable proper reuse of parts and recycling and should not be thrown away at its end of life.
- Users should contact the local authorized point of collection for recycling and disposing of their end-of-life products.
- Visit the MSI website <https://csr.msi.com/global/pevn_ewaste> and locate a nearby distributor for further recycling information.
- Please visit <https://us.msi.com/page/recycling> for information regarding the recycling of your product in the US.

Warning!

Overuse of screens is likely to affect eyesight.

Recommendations:

1. Take a 10-minute break for every 30 minutes of screen time.
2. Children under 2 years of age should have no screen time. For children aged 2 years and over, screen time should be limited to less than one hour per day.

Copyright and Trademarks Notice

Copyright © Micro-Star Int' l Co., Ltd. All rights reserved. The MSI logo used is a registered trademark of Micro-Star Int' l Co., Ltd. All other marks and names mentioned may be trademarks of their respective owners. No warranty as to accuracy or completeness is expressed or implied. MSI reserves the right to make changes to this document without prior notice.

The terms HDMI™, HDMI™ High-Definition Multimedia Interface, HDMI™ Trade dress and the HDMI™ Logos are trademarks or registered trademarks of HDMI™ Licensing Administrator, Inc.

Technical Support

If a problem arises with your product and no solution can be obtained from the user' s manual, please contact your place of purchase or local distributor. Alternatively, please visit https://www.msi.com/support/ for further guidance.