ASRock

Z590 TAICHI

User Manual

Version 1.0
Published January 2021
Copyright©2021 ASRock INC. All rights reserved.

Copyright Notice:

No part of this documentation may be reproduced, transcribed, transmitted, or translated in any language, in any form or by any means, except duplication of documentation by the purchaser for backup purpose, without written consent of ASRock Inc.

Products and corporate names appearing in this documentation may or may not be registered trademarks or copyrights of their respective companies, and are used only for identification or explanation and to the owners' benefit, without intent to infringe.

Disclaimer:

Specifications and information contained in this documentation are furnished for informational use only and subject to change without notice, and should not be constructed as a commitment by ASRock. ASRock assumes no responsibility for any errors or omissions that may appear in this documentation.

With respect to the contents of this documentation, ASRock does not provide warranty of any kind, either expressed or implied, including but not limited to the implied warranties or conditions of merchantability or fitness for a particular purpose.

In no event shall ASRock, its directors, officers, employees, or agents be liable for any indirect, special, incidental, or consequential damages (including damages for loss of profits, loss of business, loss of data, interruption of business and the like), even if ASRock has been advised of the possibility of such damages arising from any defect or error in the documentation or product.

This device complies with Part 15 of the FCC Rules. Operation is subject to the following two conditions:
(1) this device may not cause harmful interference, and
(2) this device must accept any interference received, including interference that may cause undesired operation.

CALIFORNIA, USA ONLY

The Lithium battery adopted on this motherboard contains Perchlorate, a toxic substance controlled in Perchlorate Best Management Practices (BMP) regulations passed by the California Legislature. When you discard the Lithium battery in California, USA, please follow the related regulations in advance.
"Perchlorate Material-special handling may apply, see www.dtsc.ca.gov/hazardouswaste/perchlorate"

ASRock Website: http://www.asrock.com

AUSTRALIA ONLY

Our goods come with guarantees that cannot be excluded under the Australian Consumer Law. You are entitled to a replacement or refund for a major failure and compensation for any other reasonably foreseeable loss or damage caused by our goods. You are also entitled to have the goods repaired or replaced if the goods fail to be of acceptable quality and the failure does not amount to a major failure. If you require assistance please call ASRock Tel : +886-2-28965588 ext.123 (Standard International call charges apply)

The terms HDMI® and HDMI High-Definition Multimedia Interface, and the HDMI logo are trademarks or registered trademarks of HDMI Licensing LLC in the United States and other countries.

HIGH-DEFINITION MULTIMEDIA INTERFACE

INTEL END USER SOFTWARE LICENSE AGREEMENT
IMPORTANT - READ BEFORE COPYING, INSTALLING OR USING.

LICENSE. Licensee has a license under Intel's copyrights to reproduce Intel's Software only in its unmodified and binary form, (with the accompanying documentation, the "Software") for Licensee's personal use only, and not commercial use, in connection with Intel-based products for which the Software has been provided, subject to the following conditions:

(a) Licensee may not disclose, distribute or transfer any part of the Software, and You agree to prevent unauthorized copying of the Software.

(b) Licensee may not reverse engineer, decompile, or disassemble the Software.

(c) Licensee may not sublicense the Software.

(d) The Software may contain the software and other intellectual property of third party suppliers, some of which may be identified in, and licensed in accordance with, an enclosed license.txt file or other text or file.

(e) Intel has no obligation to provide any support, technical assistance or updates for the Software.

OWNERSHIP OF SOFTWARE AND COPYRIGHTS. Title to all copies of the Software remains with Intel or its licensors or suppliers. The Software is copyrighted and protected by the laws of the United States and other countries, and international treaty provisions. Licensee may not remove any copyright notices from the Software. Except as otherwise expressly provided above, Intel grants no express or implied right under Intel patents, copyrights, trademarks, or other intellectual property rights. Transfer of the license terminates Licensee's right to use the Software.

DISCLAIMER OF WARRANTY. The Software is provided "AS IS" without warranty of any kind, EITHER EXPRESS OR IMPLIED, INCLUDING WITHOUT LIMITATION, WARRANTIES OF MERCHANTABILITY OR FITNESS FOR ANY PARTICULAR PURPOSE.

LIMITATION OF LIABILITY. NEITHER INTEL NOR ITS LICENSORS OR SUPPLIERS WILL BE LIABLE FOR ANY LOSS OF PROFITS, LOSS OF USE, INTERRUPTION OF BUSINESS, OR INDIRECT, SPECIAL, INCIDENTAL, OR CONSEQUENTIAL DAMAG-

ES OF ANY KIND WHETHER UNDER THIS AGREEMENT OR OTHERWISE, EVEN IF INTEL HAS BEEN ADVISED OF THE POSSIBILITY OF SUCH DAMAGES.

LICENSE TO USE COMMENTS AND SUGGESTIONS. This Agreement does NOT obligate Licensee to provide Intel with comments or suggestions regarding the Software. However, if Licensee provides Intel with comments or suggestions for the modification, correction, improvement or enhancement of (a) the Software or (b) Intel products or processes that work with the Software, Licensee grants to Intel a non-exclusive, worldwide, perpetual, irrevocable, transferable, royalty-free license, with the right to sublicense, under Licensee's intellectual property rights, to incorporate or otherwise utilize those comments and suggestions.

TERMINATION OF THIS LICENSE. Intel or the sublicensor may terminate this license at any time if Licensee is in breach of any of its terms or conditions. Upon termination, Licensee will immediately destroy or return to Intel all copies of the Software.

THIRD PARTY BENEFICIARY. Intel is an intended beneficiary of the End User License Agreement and has the right to enforce all of its terms.

U.S. GOVERNMENT RESTRICTED RIGHTS. The Software is a commercial item (as defined in 48 C.F.R. 2.101) consisting of commercial computer software and commercial computer software documentation (as those terms are used in 48 C.F.R. 12.212), consistent with 48 C.F.R. 12.212 and 48 C.F.R 227.7202-1 through 227.7202-4. You will not provide the Software to the U.S. Government. Contractor or Manufacturer is Intel Corporation, 2200 Mission College Blvd., Santa Clara, CA 95054.

EXPORT LAWS. Licensee agrees that neither Licensee nor Licensee's subsidiaries will export/re-export the Software, directly or indirectly, to any country for which the U.S. Department of Commerce or any other agency or department of the U.S. Government or the foreign government from where it is shipping requires an export license, or other governmental approval, without first obtaining any such required license or approval. In the event the Software is exported from the U.S.A. or re-exported from a foreign destination by Licensee, Licensee will ensure that the distribution and export/re-export or import of the Software complies with all laws, regulations, orders, or other restrictions of the U.S. Export Administration Regulations and the appropriate foreign government.

APPLICABLE LAWS. This Agreement and any dispute arising out of or relating to it will be governed by the laws of the U.S.A. and Delaware, without regard to conflict of laws principles. The Parties to this Agreement exclude the application of the United Nations Convention on Contracts for the International Sale of Goods (1980). The state and federal courts sitting in Delaware, U.S.A. will have exclusive jurisdiction over any dispute arising out of or relating to this Agreement. The Parties consent to personal jurisdiction and venue in those courts. A Party that obtains a judgment against the other Party in the courts identified in this section may enforce that judgment in any court that has jurisdiction over the Parties.

Licensee's specific rights may vary from country to country.

CE Warning

This device complies with directive 2014/53/EU issued by the Commision of the European Community.

This equipment complies with EU radiation exposure limits set forth for an uncontrolled environment.
This equipment should be installed and operated with minimum distance 20cm between the radiator & your body.

Operations in the 5.15-5.35GHz band are restricted to indoor usage only.

	AT	BE	BG	CH	CY	CZ	DE
	DK	EE	EL	ES	FI	FR	HR
	HU	IE	IS	IT	LI	LT	LU
	LV	MT	NL	NO	PL	PT	RO
	SE	SI	SK	TR	UK		

Radio transmit power per transceiver type

Function	Frequency	Maximum Output Power (EIRP)
WiFi	2400-2483.5 MHz	18.5 + / -1.5 dbm
	5150-5250 MHz	21.5 + / -1.5 dbm
	5250-5350 MHz	18.5 + / -1.5 dbm (no TPC) 21.5 + / -1.5 dbm (TPC)
	5470-5725 MHz	25.5 + / -1.5 dbm (no TPC) 28.5 + / -1.5 dbm (TPC)
Bluetooth	2400-2483.5 MHz	8.5 + / -1.5 dbm

Contents

Chapter 1 Introduction **1**

1.1 Package Contents 1

1.2 Specifications 2

1.3 Motherboard Layout 9

1.4 I/O Panel 11

1.5 802.11ax Wi-Fi 6E Module and ASRock WiFi 2.4/5/6 GHz Antennas 13

1.6 Graphics Card Holder 15

1.7 3010 Cooling Fan with Bracket 16

1.8 4010 Cooling Fan Bracket 17

1.9 Wireless Dongle USB Bracket 18

Chapter 2 Installation **19**

2.1 Installing the CPU 20

2.2 Installing the CPU Fan and Heatsink 23

2.3 Installing Memory Modules (DIMM) 24

2.4 Expansion Slots (PCI Express Slots) 26

2.5 Jumpers Setup 28

2.6 Onboard Headers and Connectors 29

2.7 Smart Switches 35

2.8 Dr. Debug 37

2.9 CrossFireX™ , 3-Way CrossFireX™ and Quad CrossFireX™ Operation Guide 43

2.9.2 Installing Three CrossFireX™-Ready Graphics Cards 45
2.10 M.2_SSD (NGFF) Module Installation Guide (M2_1) 47
2.11 M.2_SSD (NGFF) Module Installation Guide (M2_2) 51
2.12 M.2_SSD (NGFF) Module Installation Guide (M2_3) 56

Chapter 3 Software and Utilities Operation 61

3.1 Installing Drivers 61
3.2 ASRock Motherboard Utility (A-Tuning) 62
3.2.1 Installing ASRock Motherboard Utility (A-Tuning) 62
3.2.2 Using ASRock Motherboard Utility (A-Tuning) 62
3.3 ASRock Live Update & APP Shop 65
3.3.1 UI Overview 65
3.3.2 Apps 66
3.3.3 BIOS & Drivers 69
3.3.4 Setting 70
3.4 Nahimic Audio 71
3.5 ASRock Polychrome SYNC 72

Chapter 4 UEFI SETUP UTILITY 75

4.1 Introduction 75
4.2 EZ Mode 76
4.3 Advanced Mode 77
4.3.1 UEFI Menu Bar 77
4.3.2 Navigation Keys 78
4.4 Main Screen 79
4.5 OC Tweaker Screen 80

4.6 Advanced Screen 92
4.6.1 CPU Configuration 93
4.6.2 Chipset Configuration 95
4.6.3 Storage Configuration 99
4.6.4 NVMe Configuration 101
4.6.5 Intel(R) Thunderbolt 102
4.6.6 ACPI Configuration 103
4.6.7 USB Configuration 104
4.6.8 Trusted Computing 105
4.7 Tools 106
4.8 Hardware Health Event Monitoring Screen 108
4.9 Security Screen 112
4.10 Boot Screen 113
4.11 Exit Screen 116

Chapter 1 Introduction

Thank you for purchasing ASRock Z590 Taichi motherboard, a reliable motherboard produced under ASRock's consistently stringent quality control. It delivers excellent performance with robust design conforming to ASRock's commitment to quality and endurance.

In this documentation, Chapter 1 and 2 contains the introduction of the motherboard and step-by-step installation guides. Chapter 3 contains the operation guide of the software and utilities. Chapter 4 contains the configuration guide of the BIOS setup.

Because the motherboard specifications and the BIOS software might be updated, the content of this documentation will be subject to change without notice. In case any modifications of this documentation occur, the updated version will be available on ASRock's website without further notice. If you require technical support related to this motherboard, please visit our website for specific information about the model you are using. You may find the latest VGA cards and CPU support list on ASRock's website as well. ASRock website http://www.asrock.com.

1.1 Package Contents

- ASRock Z590 Taichi Motherboard (ATX Form Factor)
- ASRock Z590 Taichi Quick Installation Guide
- ASRock Z590 Taichi Support CD
- 4 x Serial ATA (SATA) Data Cables (Optional)
- 1 x Graphics Card Holder (Optional)
- 1 x Wireless Dongle USB Bracket (Optional)
- 1 x 3010 Cooling Fan with Bracket and Screw Package (Optional)
- 1 x 4010 Cooling Fan Bracket and Screw Package (Optional)
- 2 x ASRock WiFi 2.4/5/6 GHz Antennas (Optional)
- 1 x ASRock Screwdriver (Optional)
- 3 x Screws for M.2 Sockets (Optional)
- 2 x Standoffs for M.2 Sockets (Optional)

1.2 Specifications

Platform	• ATX Form Factor • 8 Layer PCB • 2oz Copper PCB
CPU	• Supports 10th Gen Intel® Core™ Processors and 11th Gen Intel® Core™ Processors (LGA1200) • Digi Power design • 14 Power Phase design • Supports Intel® Turbo Boost Max 3.0 Technology • Supports Intel® K-Series unlocked CPUs • Supports ASRock Hyper BCLK Engine III
Chipset	• Intel® Z590
Memory	• Dual Channel DDR4 Memory Technology • 4 x DDR4 DIMM Slots • 11th Gen Intel® Core™ Processors support DDR4 non-ECC, un-buffered memory up to 5000+(OC)* • 10th Gen Intel® Core™ Processors support DDR4 non-ECC, un-buffered memory up to 4800+(OC)* * 11th Gen Intel® Core™ (i9/i7/i5) support DDR4 up to 3200; Core™ (i3), Pentium® and Celeron® support DDR4 up to 2666. * 10th Gen Intel® Core™ (i9/i7) support DDR4 up to 2933; Core™ (i5/i3), Pentium® and Celeron® support DDR4 up to 2666. * Please refer to Memory Support List on ASRock's website for more information. (http://www.asrock.com/) • Supports ECC UDIMM memory modules (operate in non-ECC mode) • Max. capacity of system memory: 128GB • Supports Intel® Extreme Memory Profile (XMP) 2.0 • 15μ Gold Contact in DIMM Slots

English

Expansion Slot

11th Gen Intel® Core™ Processors

- 3 x PCI Express x16 Slots (PCIE1/PCIE2/PCIE4: single at Gen4x16 (PCIE1); dual at Gen4x8 (PCIE1) / Gen4x8 (PCIE2); triple at Gen4x8 (PCIE1) / Gen4x8 (PCIE2) / Gen3x4 (PCIE4))*

10th Gen Intel® Core™ Processors

- 3 x PCI Express x16 Slots (PCIE1/PCIE2/PCIE4: single at Gen3x16 (PCIE1); dual at Gen3x8 (PCIE1) / Gen3x8 (PCIE2); triple at Gen3x8 (PCIE1) / Gen3x8 (PCIE2) / Gen3x4 (PCIE4))*

* Supports NVMe SSD as boot disks

- 1 x PCI Express 3.0 x1 Slot
- Supports AMD Quad CrossFireX™, 3-Way CrossFireX™ and CrossFireX™
- 1 x Vertical M.2 Socket (Key E) with the bundled WiFi-802.11ax module (on the rear I/O)
- 15μ Gold Contact in VGA PCIe Slot (PCIE1)

Graphics

- Intel® UHD Graphics Built-in Visuals and the VGA outputs can be supported only with processors which are GPU integrated.
- 11th Gen Intel® Core™ Processors support Intel® Xe Graphics Architecture (Gen 12). 10th Gen Intel® Core™ Processors support Gen 9 Graphics
- Graphics, Media & Compute: Microsoft DirectX 12, OpenGL 4.5, Intel® Built In Visuals, Intel® Quick Sync Video, Hybrid / Switchable Graphics, OpenCL 2.1
- Display & Content Security: Rec. 2020 (Wide Color Gamut), Microsoft PlayReady 3.0, UHD/HDR Blu-ray Disc
- Three graphics output options: 1 x HDMI and 2 x Intel® Thunderbolt™ 4
- Supports Triple Monitor
- Supports Intel® Thunderbolt™ 4 with max. resolution up to 4K x 2K (4096x2160) @ 60Hz
- Supports HDMI 2.0 with max. resolution up to 4K x 2K (4096x2160) @ 30Hz

- Supports Auto Lip Sync, Deep Color (12bpc), xvYCC and HBR (High Bit Rate Audio) with HDMI 2.0 Port (Compliant HDMI monitor is required)
- Supports HDCP 2.3 with HDMI 2.0 and Intel® Thunderbolt™ 4 Ports
- Supports 4K Ultra HD (UHD) playback with HDMI 2.0 and Intel® Thunderbolt™ 4 Ports

* 11th Gen Intel® Core™ Processors support HDMI 2.0. 10th Gen Intel® Core™ Processors support HDMI 1.4.

Audio

- 7.1 CH HD Audio with Content Protection (Realtek ALC1220 Audio Codec)
- Premium Blu-ray Audio support
- Supports Surge Protection
- WIMA Audio Capacitors (For Front Outputs)
- ESS SABRE9218 DAC for Front Panel Audio (130dB SNR)
- Pure Power-In
- Direct Drive Technology
- PCB Isolate Shielding
- Impedance Sensing on Rear Out port
- Individual PCB Layers for R/L Audio Channel
- Gold Audio Jacks
- 15μ Gold Audio Connector
- Nahimic Audio

LAN

1 x 2.5 Gigabit LAN 10/100/1000/2500 Mb/s (Killer® E3100G)

- Supports Killer LAN Software
- Supports Killer DoubleShot™ Pro
- Supports Wake-On-LAN
- Supports Lightning/ESD Protection
- Supports Energy Efficient Ethernet 802.3az
- Supports PXE

1 x Gigabit LAN 10/100/1000 Mb/s (Intel® I219V)

- Supports Wake-On-LAN
- Supports Lightning/ESD Protection
- Supports Energy Efficient Ethernet 802.3az
- Supports PXE

Wireless LAN	• Killer AX1675x 802.11ax Wi-Fi 6E Module • Supports IEEE 802.11a/b/g/n/ax • Supports Dual-Band 2x2 160MHz with extended 6GHz band* support * Wi-Fi 6E (6GHz band) is not currently enabled by default due to the different regulation status of each country. It will be activated (for supported countries) through Windows Update and software update once available. The update is expected to be in the middle of 2021. • 2 antennas to support 2 (Transmit) x 2 (Receive) diversity technology • Supports Bluetooth 5.2 + High speed class II • Supports MU-MIMO • Supports Killer LAN Software • Supports Killer DoubleShot™ Pro
Rear Panel I/O	• 2 x Antenna Ports • 1 x HDMI Port • 1 x Optical SPDIF Out Port • 2 x USB 3.2 Gen2 Type-A Ports (10 Gb/s) (ReDriver) (Supports ESD Protection) • 2 x USB 4.0 Thunderbolt™ 4 Type-C Port (40 Gb/s for USB 4.0 protocol; 40Gb/s for Thunderbolt protocol) (Supports ESD Protection) * Supports USB PD 2.0 up to 9V@3A (27W) / 5V@3A (15W) charging • 4 x USB 3.2 Gen1 Type-A Ports (Supports ESD Protection) * USB3_5_6 is from Intel® Z590; USB3_1 is from ASMedia ASM1042A; USB3_2, USB3_3 and USB3_4 are from ASMedia ASM1074 hub. * Ultra USB Power is supported on USB3_3 port. * ACPI wake-up function is not supported on USB3_3 port. • 2 x RJ-45 LAN Ports with LED (ACT/LINK LED and SPEED LED) • 1 x BIOS Flashback Button • HD Audio Jacks: Rear Speaker / Central / Bass / Line in / Front Speaker / Microphone (Gold Audio Jacks)

Storage	• 6 x SATA3 6.0 Gb/s Connectors, support RAID (RAID 0, RAID 1, RAID 5, RAID 10, Intel Rapid Storage Technology 18), NCQ, AHCI and Hot Plug* • 2 x SATA3 6.0 Gb/s Connectors by ASMedia ASM1061, support NCQ, AHCI and Hot Plug * M2_2, SATA3_0 and SATA3_1 share lanes. If either one of them is in use, the others will be disabled. * M2_3, SATA3_4, SATA3_5 and PCIE4 share lanes. If either one of them is in use, the others will be disabled. Please refer to the following link to configure a PCIE SSD RAID on M2_3 slot and other M.2 slots. FAQ Link: https://www.asrock.com/mb/Intel/Z590%20Taichi/index.asp#FAQ • 1 x Hyper M.2 Socket (M2_1), supports M Key type 2280 M.2 PCI Express module up to Gen4x4 (64 Gb/s) (with 11th Gen Intel® Core™ Processors) or Gen3x4 (32 Gb/s) (with 10th Gen Intel® Core™ Processors)** • 1 x Ultra M.2 Socket (M2_2), supports M Key type 2260/2280 M.2 SATA3 6.0 Gb/s module and M.2 PCI Express module up to Gen3 x4 (32 Gb/s)** • 1 x Ultra M.2 Socket (M2_3), supports M Key type 2230/2242/2260/2280/22110 M.2 SATA3 6.0 Gb/s module and M.2 PCI Express module up to Gen3 x4 (32 Gb/s)** ** Supports Intel® Optane™ Technology (M2_2 and M2_3 only) ** Supports NVMe SSD as boot disks ** Supports ASRock U.2 Kit
Connector	• 1 x SPI TPM Header • 1 x Power LED and Speaker Header • 2 x RGB LED Headers * Support in total up to 12V/3A, 36W LED Strip • 2 x Addressable LED Headers * Support in total up to 5V/3A, 15W LED Strip • 1 x CPU Fan Connector (4-pin) * The CPU Fan Connector supports the CPU fan of maximum 1A (12W) fan power. • 1 x CPU/Water Pump Fan Connector (4-pin) (Smart Fan Speed Control) * CPU_FAN2/WP_3A supports the water cooler fan of maximum 3A (36W) fan power.

	• 6 x Chassis/Water Pump Fan Connectors (4-pin) (Smart Fan Speed Control) * The Chassis/Water Pump Fan supports the water cooler fan of maximum 2A (24W) fan power. * CPU_FAN2/WP_3A, CHA_FAN1/WP, CHA_FAN2/WP, CHA_FAN3/WP, CHA_FAN4/WP, CHA_FAN5/WP and CHA_FAN6/WP can auto detect if 3-pin or 4-pin fan is in use. • 1 x 24 pin ATX Power Connector (Hi-Density Power Connector) • 2 x 8 pin 12V Power Connectors (Hi-Density Power Connector) • 1 x Front Panel Audio Connector (15μ Gold Audio Connector) • 2 x USB 2.0 Headers (Support 4 USB 2.0 ports) (Supports ESD Protection) • 2 x USB 3.2 Gen1 Headers (Support 4 USB 3.2 Gen1 ports) (ASMedia ASM1074 hub) (Supports ESD Protection) • 1 x Front Panel Type C USB 3.2 Gen2x2 Header (20 Gb/s) (Supports ESD Protection) • 1 x Clear CMOS Button • 1 x Dr. Debug with LED • 1 x Power Button with LED • 1 x Reset Button with LED
BIOS Feature	• AMI UEFI Legal BIOS with multilingual GUI support • ACPI 6.0 Compliant wake up events • SMBIOS 2.7 Support • CPU Core/Cache, CPU GT, DRAM(VCCM, VPPM, VTT), VCCSFR, VCCPLL, VCCSTG, VCCSTG_OUT, PCH Voltage, VCCIO_0, VCCIO_1_2, VCCST, VCCSA, CPU Internal PLL, GT PLL, Ring PLL, System Agent PLL, Memory Controller PLL Voltage Multi-adjustment
Hardware Monitor	• Fan Tachometer: CPU, CPU/Water Pump, Chassis/Water Pump Fans • Quiet Fan (Auto adjust chassis fan speed by CPU temperature): CPU, CPU/Water Pump, Chassis/Water Pump Fans • Fan Multi-Speed Control: CPU, CPU/Water Pump, Chassis/Water Pump Fans

	• Voltage monitoring: +12V, +5V, +3.3V, CPU Vcore, DRAM, PCH, VCCSA, VCCIO_0, VCCIO_1_2, VCCFSR_OC
OS	• Microsoft® Windows® 10 64-bit
Certifications	• FCC, CE • ErP/EuP ready (ErP/EuP ready power supply is required) • CEC Tier II ready

** For detailed product information, please visit our website: http://www.asrock.com*

Please realize that there is a certain risk involved with overclocking, including adjusting the setting in the BIOS, applying Untied Overclocking Technology, or using third-party overclocking tools. Overclocking may affect your system's stability, or even cause damage to the components and devices of your system. It should be done at your own risk and expense. We are not responsible for possible damage caused by overclocking.

1.3 Motherboard Layout

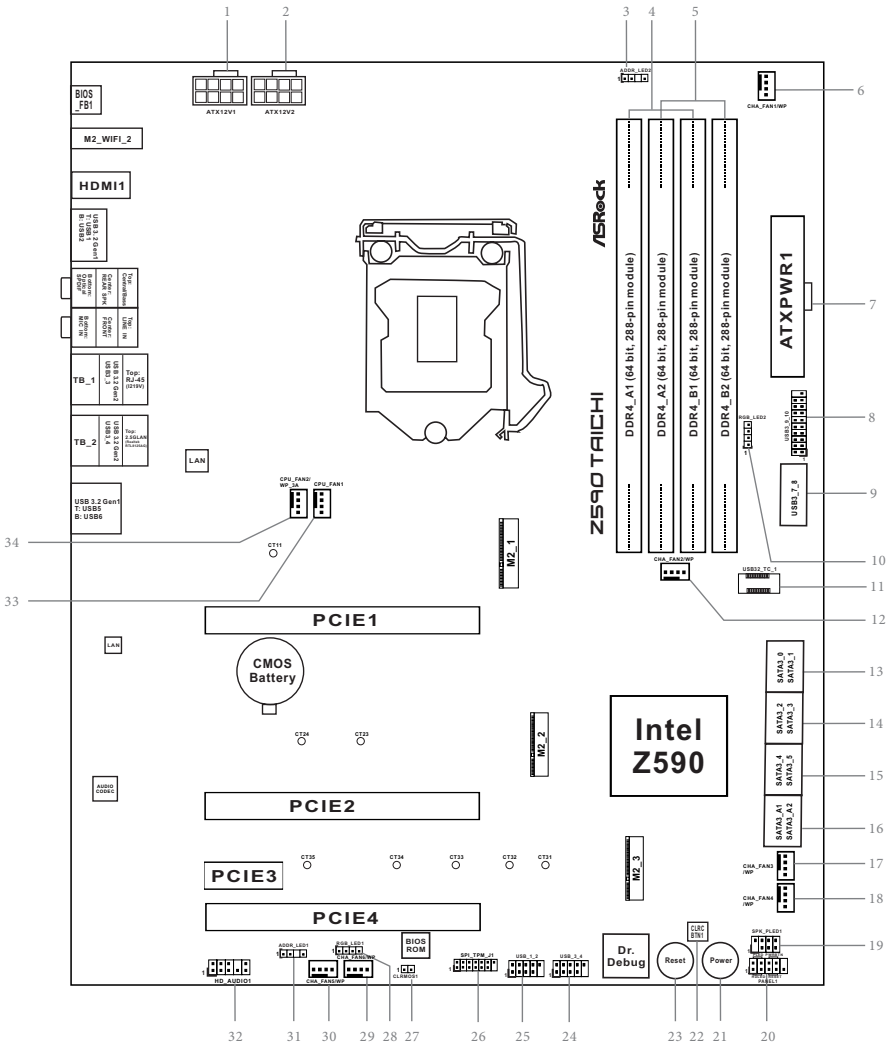

English

No.	Description
1	8 pin 12V Power Connector (ATX12V1)
2	8 pin 12V Power Connector (ATX12V2)
3	Addressable LED Header (ADDR_LED2)
4	2 x 288-pin DDR4 DIMM Slots (DDR4_A1, DDR4_B1)
5	2 x 288-pin DDR4 DIMM Slots (DDR4_A2, DDR4_B2)
6	Chassis/Water Pump Fan Connector (CHA_FAN1/WP)
7	ATX Power Connector (ATXPWR1)
8	USB 3.2 Gen1 Header (USB3_9_10)
9	USB 3.2 Gen1 Header (USB3_7_8)
10	RGB LED Header (RGB_LED2)
11	Front Panel Type C USB 3.2 Gen2x2 Header (USB32_TC_1)
12	Chassis/Water Pump Fan Connector (CHA_FAN2/WP)
13	SATA3 Connector (SATA3_0)(Upper), (SATA3_1)(Lower)
14	SATA3 Connector (SATA3_2)(Upper), (SATA3_3)(Lower)
15	SATA3 Connector (SATA3_4)(Upper), (SATA3_5)(Lower)
16	SATA3 Connector (SATA3_A1)(Upper), (SATA3_A2)(Lower)
17	Chassis/Water Pump Fan Connector (CHA_FAN3/WP)
18	Chassis/Water Pump Fan Connector (CHA_FAN4/WP)
19	Power LED and Speaker Header (SPK_PLED1)
20	System Panel Header (PANEL1)
21	Power Button (PWRBTN1)
22	Clear CMOS Button (CLRCBTN1)
23	Reset Button (RSTBTN1)
24	USB 2.0 Header (USB_3_4)
25	USB 2.0 Header (USB_1_2)
26	SPI TPM Header (SPI_TPM_J1)
27	Clear CMOS Jumper (CLRMOS1)
28	RGB LED Header (RGB_LED1)
29	Chassis/Water Pump Fan Connector (CHA_FAN6/WP)
30	Chassis/Water Pump Fan Connector (CHA_FAN5/WP)
31	Addressable LED Header (ADDR_LED1)
32	Front Panel Audio Header (HD_AUDIO1)
33	CPU Fan Connector (CPU_FAN1)
34	CPU/Water Pump Fan Connector (CPU_FAN2/WP_3A)

1.4 I/O Panel

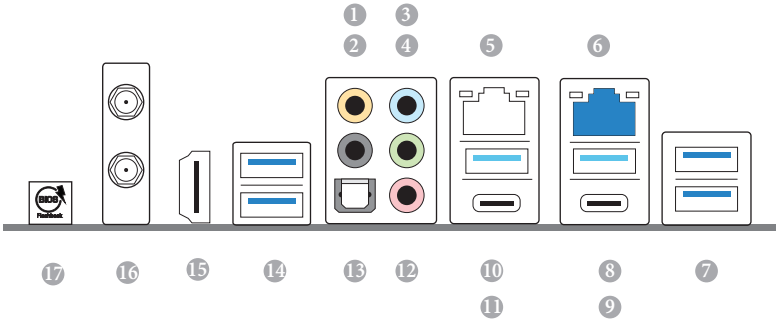

No.	Description	No.	Description
1	Central / Bass (Orange)	10	USB 3.2 Gen1 Type-A Port (USB3_3)****
2	Rear Speaker (Black)	11	USB 4.0 Thunderbolt™ 4 Type-C Port (TB_1)
3	Line In (Light Blue)	12	Microphone (Pink)
4	Front Speaker (Lime)*	13	Optical SPDIF Out Port
5	LAN RJ-45 Port (Intel® I219V)**	14	USB 3.2 Gen1 Type-A Ports (USB3_12)
6	2.5G LAN RJ-45 Port (Killer® E3100G)***	15	HDMI Port
7	USB 3.2 Gen1 Type-A Ports (USB3_5_6)	16	Antenna Ports
8	USB 3.2 Gen2 Type-A Port (USB3_4)	17	BIOS Flashback Button
9	USB 4.0 Thunderbolt™ 4 Type-C Port (TB_2)		

English

** If you use a 2-channel speaker, please connect the speaker's plug into "Front Speaker Jack". See the table below for connection details in accordance with the type of speaker you use.*

Audio Output Channels	Front Speaker (No. 4)	Rear Speaker (No. 2)	Central / Bass (No. 1)	Line In (No. 3)
2	V	--	--	--
4	V	V	--	--
6	V	V	V	--
8	V	V	V	V

*** There are two LEDs on each LAN port. Please refer to the table below for the LAN port LED indications.*

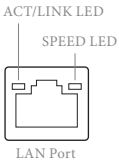

Activity / Link LED		Speed LED	
Status	**Description**	**Status**	**Description**
Off	No Link	Off	10Mbps connection
Blinking	Data Activity	Orange	100Mbps connection
On	Link	Green	1Gbps connection

****There are two LEDs on each LAN port. Please refer to the table below for the LAN port LED indications.*

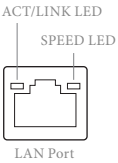

Activity / Link LED		Speed LED	
Status	**Description**	**Status**	**Description**
Off	No Link	Off	10Mbps connection
Blinking	Data Activity	Orange	100Mbps/1Gbps connection
On	Link	Green	2.5Gbps connection

***** Ultra USB Power is supported on USB3_3 ports. ACPI wake-up function is not supported on USB3_3 ports.*

1.5 802.11ax Wi-Fi 6E Module and ASRock WiFi 2.4/5/6 GHz Antennas

802.11ax Wi-Fi 6E + BT Module

This motherboard comes with an exclusive 802.11 a/b/g/n/ax Wi-Fi 6E + BT v5.2 module (pre-installed on the rear I/O panel) that offers support for 802.11 a/b/g/n/ax Wi-Fi 6E connectivity standards and Bluetooth v5.2. Wi-Fi 6E + BT module is an easy-to-use wireless local area network (WLAN) adapter to support Wi-Fi 6E + BT. Bluetooth v5.2 standard features Smart Ready technology that adds a whole new class of functionality into the mobile devices. BT 5.2 also includes Low Energy Technology and ensures extraordinary low power consumption for PCs.

* The transmission speed may vary according to the environment.

* Wi-Fi 6E (6GHz band) is not currently enabled by default due to the different regulation status of each country. It will be activated (for supported countries) through Windows Update and software update once available. The update is expected to be in the middle of 2021.

WiFi Antennas Installation Guide

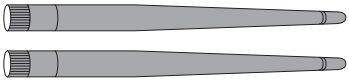

Step 1

Prepare the WiFi 2.4/5/6 GHz Antennas that come with the package.

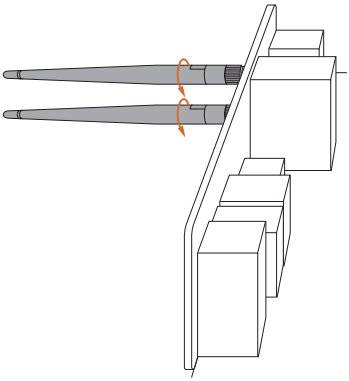

Step 2

Connect the two WiFi 2.4/5/6 GHz Antennas to the antenna connectors. Turn the antenna clockwise until it is securely connected.

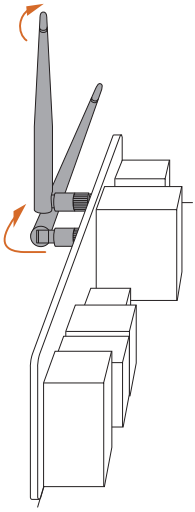

Step 3

Set the WiFi 2.4/5/6 GHz Antenna as shown in the illustration.

*You may need to adjust the direction of the antenna for a stronger signal.

1.6 Graphics Card Holder

Installing the Graphics Card Holder

Before installing the Graphics Card Holder , please make sure that your motherboard is properly installed into a PC case.

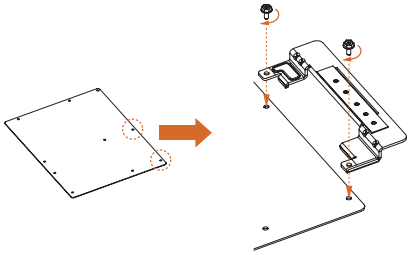

Step 1

Secure the Graphics Card Holder to the chassis with 2 screws.

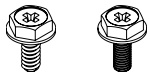

Type A Type B

*There are two types of screws in the package. Please use the appropriate type based on the standoffs on the motherboard tray of your PC case.

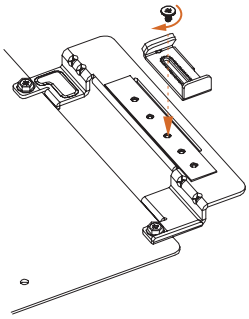

Step 2

After installing your graphics card, place the bracket in the proper position to make sure that it holds your graphics card in place.
Then secure the bracket to the Graphics Card Holder with 1 screw.

1.7 3010 Cooling Fan with Bracket

Before installing the cooling fan, please make sure that your motherboard is properly installed into a PC case.

Installing the 3010 Cooling Fan with Bracket

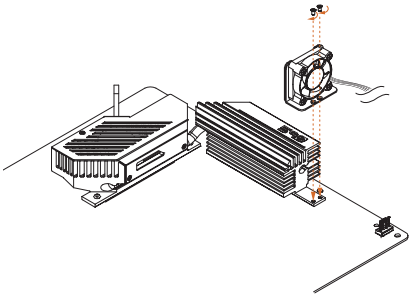

Step 1

Place the 3010 Cooling Fan with Bracket to your motherboard with screw holes aligned.
Then Secure it with 2 screws.

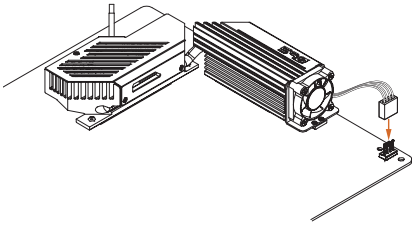

Step 2

Connect the fan cable.

English

1.8 4010 Cooling Fan Bracket

Before installing the cooling fan, please make sure that your motherboard is properly installed into a PC case.

Installing the 4010 Cooling Fan Bracket

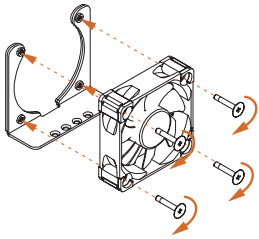

Step 1

Attach your 4010 fan to the bracket and secure it with 4 screws.
*Please note that the 4010 fan does not come with the package.

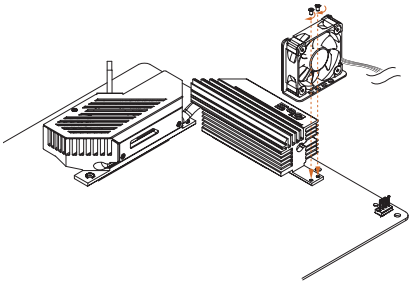

Step 2

Place the 4010 fan with bracket to your motherboard with screw holes aligned. Secure it with 2 screws.
*Please note that the bracket may possibly protrude over the motherboard due to the position of other components. The bracket can also interfere with the CPU heatsink. Please adjust the bracket into the proper position before fastening the screws.

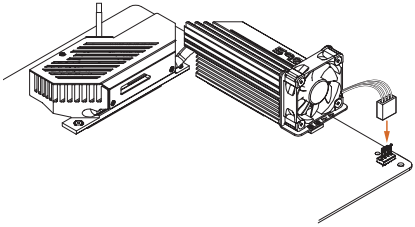

Step 3

Connect the fan cable.

1.9 Wireless Dongle USB Bracket

Installing the Wireless Dongle USB Bracket

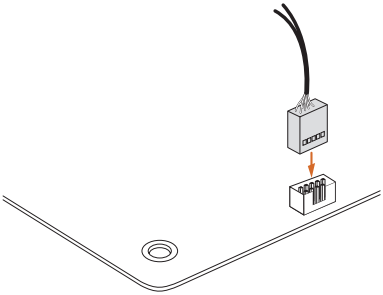

Step 1

Plug the Wireless Dongle USB Bracket into the USB 2.0 header on your motherboard.

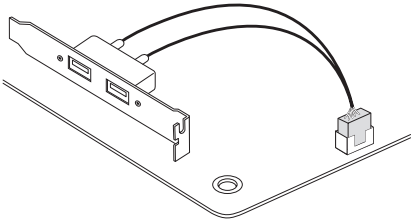

Step 2

Now you have two external USB 2.0 ports at hand.
*We recommend you plugging wireless devices dongle into these USB 2.0 ports for the best wireless signal quality.

Chapter 2 Installation

This is an ATX form factor motherboard. Before you install the motherboard, study the configuration of your chassis to ensure that the motherboard fits into it.

Pre-installation Precautions

Take note of the following precautions before you install motherboard components or change any motherboard settings.

- Make sure to unplug the power cord before installing or removing the motherboard components. Failure to do so may cause physical injuries and damages to motherboard components.
- In order to avoid damage from static electricity to the motherboard's components, NEVER place your motherboard directly on a carpet. Also remember to use a grounded wrist strap or touch a safety grounded object before you handle the components.
- Hold components by the edges and do not touch the ICs.
- Whenever you uninstall any components, place them on a grounded anti-static pad or in the bag that comes with the components.
- When placing screws to secure the motherboard to the chassis, please do not over-tighten the screws! Doing so may damage the motherboard.

2.1 Installing the CPU

1. *Before you insert the 1200-Pin CPU into the socket, please check if the **PnP cap** is on the socket, if the CPU surface is unclean, or if there are any **bent pins** in the socket. Do not force to insert the CPU into the socket if above situation is found. Otherwise, the CPU will be seriously damaged.*
2. *Unplug all power cables before installing the CPU.*

1

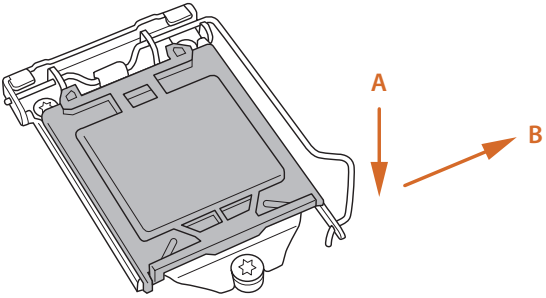

2

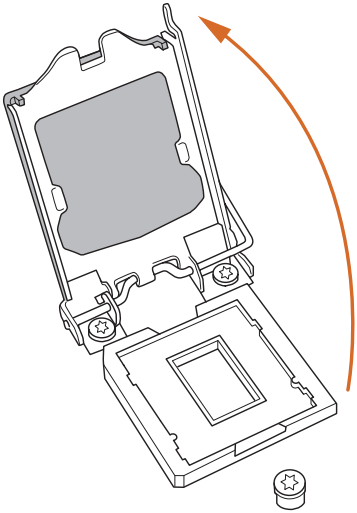

3

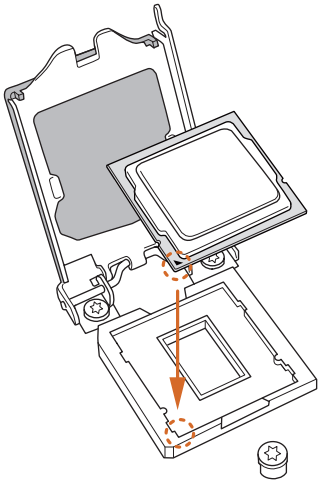

4

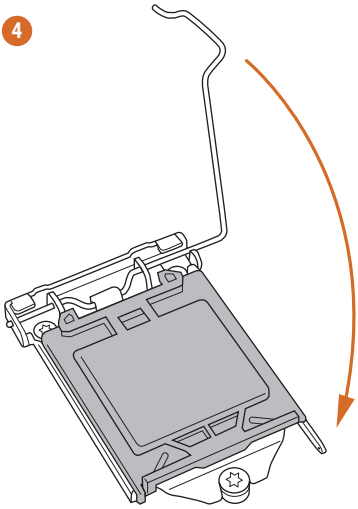

5

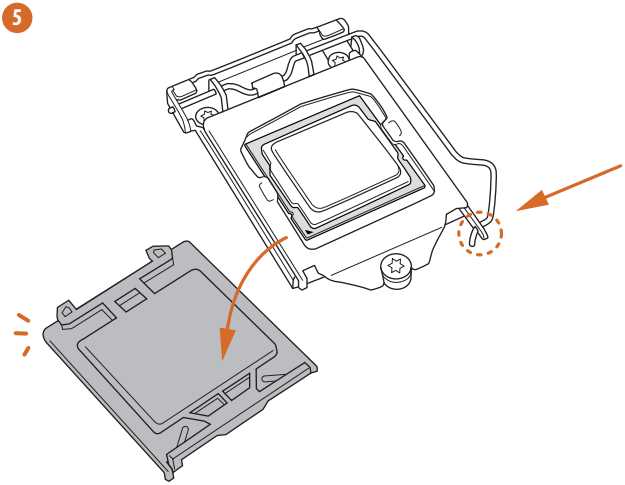

Please save and replace the cover if the processor is removed. The cover must be placed if you wish to return the motherboard for after service.

2.2 Installing the CPU Fan and Heatsink

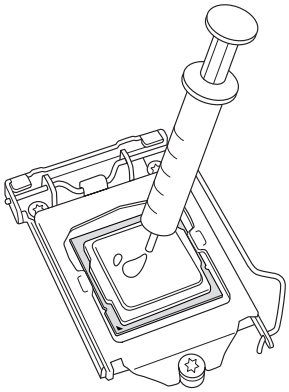

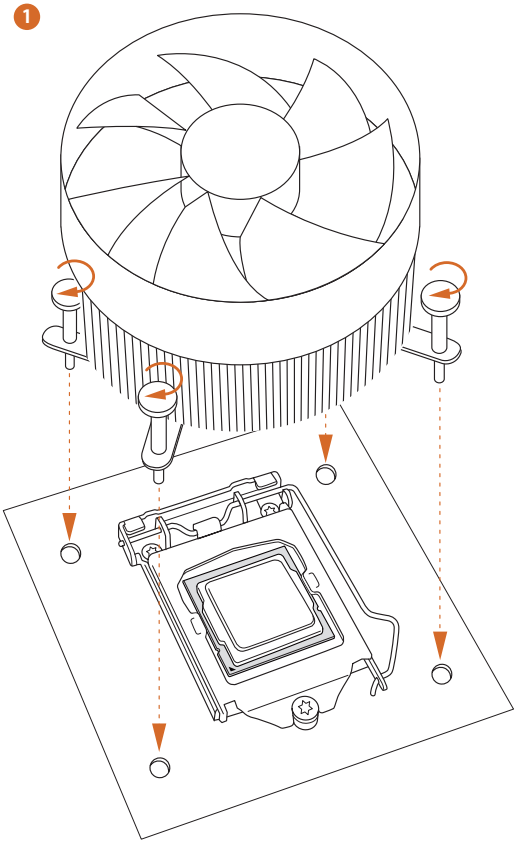

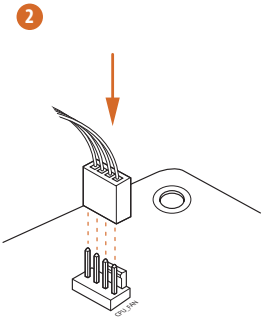

2.3 Installing Memory Modules (DIMM)

This motherboard provides four 288-pin DDR4 (Double Data Rate 4) DIMM slots, and supports Dual Channel Memory Technology.

1. *For dual channel configuration, you always need to install identical (the same brand, speed, size and chip-type) DDR4 DIMM pairs.*
2. *It is unable to activate Dual Channel Memory Technology with only one or three memory module installed.*
3. *It is not allowed to install a DDR, DDR2 or DDR3 memory module into a DDR4 slot; otherwise, this motherboard and DIMM may be damaged.*

Dual Channel Memory Configuration

Priority	DDR4_A1	DDR4_A2	DDR4_B1	DDR4_B2
1		Populated		Populated
2	Populated	Populated	Populated	Populated

The DIMM only fits in one correct orientation. It will cause permanent damage to the motherboard and the DIMM if you force the DIMM into the slot at incorrect orientation.

1

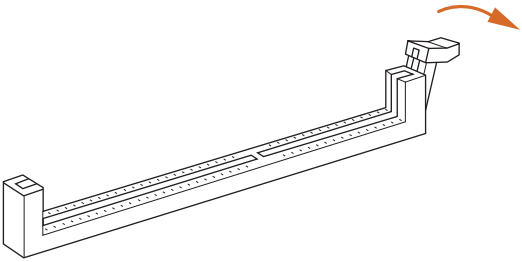

2

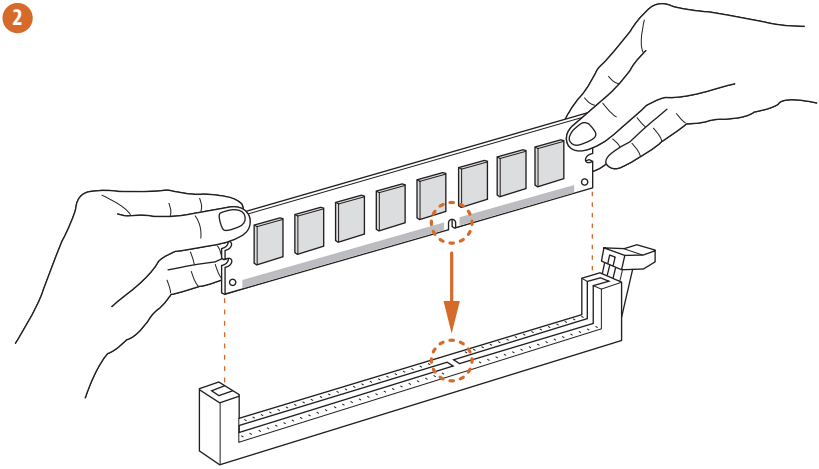

3

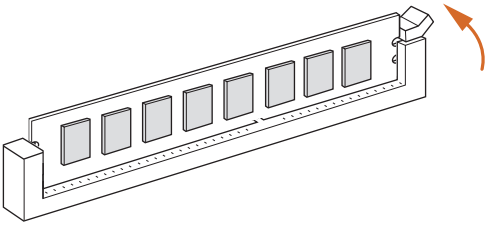

2.4 Expansion Slots (PCI Express Slots)

There are 4 PCI Express slots on the motherboard.

Before installing an expansion card, please make sure that the power supply is switched off or the power cord is unplugged. Please read the documentation of the expansion card and make necessary hardware settings for the card before you start the installation.

PCIe slots:

11th Gen Intel® Core™ Processors:

PCIE1 (PCIe 4.0 x16 slot) is used for PCI Express x16 lane width graphics cards.
PCIE2 (PCIe 4.0 x16 slot) is used for PCI Express x8 lane width graphics cards.
PCIE3(PCIe 3.0 x1 slot) is used for PCI Express x1 lane width cards.
PCIE4 (PCIe 3.0 x16 slot) is used for PCI Express x4 lane width graphics cards.

10th Gen Intel® Core™ Processors:

PCIE1 (PCIe 3.0 x16 slot) is used for PCI Express x16 lane width graphics cards.
PCIE2 (PCIe 3.0 x16 slot) is used for PCI Express x8 lane width graphics cards.
PCIE3 (PCIe 3.0 x1 slot) is used for PCI Express x1 lane width cards.
PCIE4 (PCIe 3.0 x16 slot) is used for PCI Express x4 lane width graphics cards.

* PCIE4, M2_3, SATA3_4 and SATA3_5 share lanes. If either one of them is in use, the others will be disabled.

PCIe Slot Configurations

11th Gen Intel® Core™ Processors:

	PCIE1	PCIE2	PCIE4
Single Graphics Card	Gen4x16	N/A	N/A
Two Graphics Cards in CrossFireX™ Mode	Gen4x8	Gen4x8	N/A
Three Graphics Cards in 3-Way CrossFireX™ Mode	Gen4x8	Gen4x8	Gen3x4

10th Gen Intel® Core™ Processors:

	PCIE1	PCIE2	PCIE4
Single Graphics Card	Gen3x16	N/A	N/A
Two Graphics Cards in CrossFireX™ Mode	Gen3x8	Gen3x8	N/A
Three Graphics Cards in 3-Way CrossFireX™ Mode	Gen3x8	Gen3x8	Gen3x4

For a better thermal environment, please connect a chassis fan to the motherboard's chassis fan connector (CHA_FAN1~6/WP) when using multiple graphics cards.

2.5 Jumpers Setup

The illustration shows how jumpers are setup. When the jumper cap is placed on the pins, the jumper is "Short". If no jumper cap is placed on the pins, the jumper is "Open".

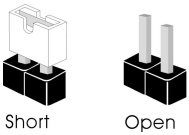

Clear CMOS Jumper (CLRCMOS1) (see p.9, No. 27)	 2-pin Jumper	Short: Clear CMOS Open: Default

CLRCMOS1 allows you to clear the data in CMOS. The data in CMOS includes system setup information such as system password, date, time, and system setup parameters. To clear and reset the system parameters to default setup, please turn off the computer and unplug the power cord, then use a jumper cap to short the pins on CLRCMOS1 for 3 seconds. Please remember to remove the jumper cap after clearing the CMOS. If you need to clear the CMOS when you just finish updating the BIOS, you must boot up the system first, and then shut it down before you do the clear-CMOS action.

2.6 Onboard Headers and Connectors

Onboard headers and connectors are NOT jumpers. Do NOT place jumper caps over these headers and connectors. Placing jumper caps over the headers and connectors will cause permanent damage to the motherboard.

System Panel Header
(9-pin PANEL1)
(see p.9, No. 20)

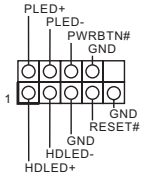

Connect the power button, reset button and system status indicator on the chassis to this header according to the pin assignments below. Note the positive and negative pins before connecting the cables.

PWRBTN (Power Button):
Connect to the power button on the chassis front panel. You may configure the way to turn off your system using the power button.

RESET (Reset Button):
Connect to the reset button on the chassis front panel. Press the reset button to restart the computer if the computer freezes and fails to perform a normal restart.

PLED (System Power LED):
Connect to the power status indicator on the chassis front panel. The LED is on when the system is operating. The LED keeps blinking when the system is in S1/S3 sleep state. The LED is off when the system is in S4 sleep state or powered off (S5).

HDLED (Hard Drive Activity LED):
Connect to the hard drive activity LED on the chassis front panel. The LED is on when the hard drive is reading or writing data.

The front panel design may differ by chassis. A front panel module mainly consists of power button, reset button, power LED, hard drive activity LED, speaker and etc. When connecting your chassis front panel module to this header, make sure the wire assignments and the pin assignments are matched correctly.

Power LED and Speaker Header
(7-pin SPK_PLED1)
(see p.9, No. 19)

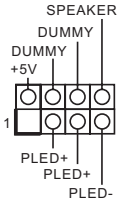

Please connect the chassis power LED and the chassis speaker to this header.

Serial ATA3 Connectors
Right Angle:
(SATA3_0:
see p.9, No. 13)(Upper)
(SATA3_1:
see p.9, No. 13)(Lower)
(SATA3_2:
see p.9, No. 14)(Upper)
(SATA3_3:
see p.9, No. 14)(Lower)
(SATA3_4:
see p.9, No. 15)(Upper)
(SATA3_5:
see p.9, No. 15)(Lower)
(SATA3_A1:
see p.9, No. 16)(Upper)
(SATA3_A2:
see p.9, No. 16)(Lower)

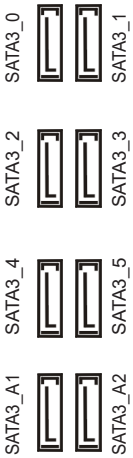

These eight SATA3 connectors support SATA data cables for internal storage devices with up to 6.0 Gb/s data transfer rate.

* M2_2, SATA3_0 and SATA3_1 share lanes. If either one of them is in use, the others will be disabled.
* M2_3, SATA3_4, SATA3_5 and PCIE4 share lanes. If either one of them is in use, the others will be disabled.

*To minimize the boot time, use Intel® Z590 SATA ports (SATA3_0) for your SSDs.

USB 2.0 Headers
(9-pin USB_1_2)
(see p.9, No. 25)
(9-pin USB_3_4)
(see p.9, No. 24)

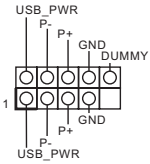

There are two headers on this motherboard. Each USB 2.0 header can support two ports.

USB 3.2 Gen1 Headers

Right Angle:

(19-pin USB3_7_8)

(see p.9, No. 9)

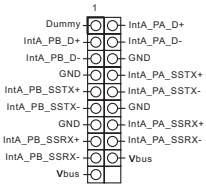

There are two headers on this motherboard. Each USB 3.2 Gen1 header can support two ports.

Vertical:

(19-pin USB3_9_10)

(see p.9, No. 8)

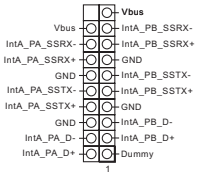

Front Panel Type C USB 3.2 Gen2x2 Header

(20-pin USB32_TC_1)

(see p.9, No. 11)

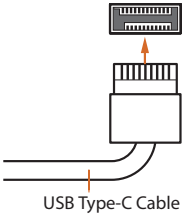

There is one Front Panel Type C USB 3.2 Gen2x2 Header on this motherboard. This header is used for connecting a USB 3.2 Gen2 module for additional USB 3.2 Gen2 ports.

Front Panel Audio Header

(9-pin HD_AUDIO1)

(see p.9, No. 32)

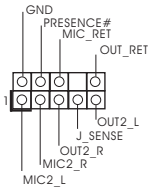

This header is for connecting audio devices to the front audio panel.

High Definition Audio supports Jack Sensing, but the panel wire on the chassis must support HDA to function correctly. Please follow the instructions in our manual and chassis manual to install your system.

English

Chassis/Water Pump Fan Connectors
(4-pin CHA_FAN1/WP)
(see p.9, No. 6)

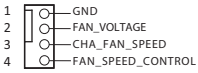

This motherboard provides six 4-Pin water cooling chassis fan connectors. If you plan to connect a 3-Pin chassis water cooler fan, please connect it to Pin 1-3.

(4-pin CHA_FAN2/WP)
(see p.9, No. 12)

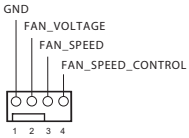

(4-pin CHA_FAN3/WP)
(see p.9, No. 17)
(4-pin CHA_FAN4/WP)
(see p.9, No. 18)

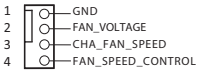

(4-pin CHA_FAN5/WP)
(see p.9, No. 30)
(4-pin CHA_FAN6/WP)
(see p.9, No. 29)

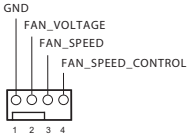

CPU Fan Connector
(4-pin CPU_FAN1)
(see p.9, No. 33)

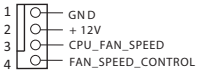

This motherboard provides a 4-Pin CPU fan (Quiet Fan) connector. If you plan to connect a 3-Pin CPU fan, please connect it to Pin 1-3.

English

CPU/Water Pump Fan Connector (4-pin CPU_FAN2/ WP_3A) (see p.9, No. 34)	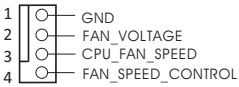	This motherboard provides a 4-Pin water cooling CPU fan connector. If you plan to connect a 3-Pin CPU water cooler fan, please connect it to Pin 1-3.
ATX Power Connector (24-pin ATXPWR1) (see p.9, No. 7)	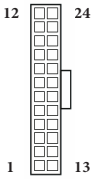	This motherboard provides a 24-pin ATX power connector. To use a 20-pin ATX power supply, please plug it along Pin 1 and Pin 13.
ATX 12V Power Connectors (8-pin ATX12V1) (see p.9, No. 1) (8-pin ATX12V2) (see p.9, No. 2)	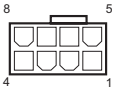	This motherboard provides two 8-pin ATX 12V power connectors. To use a 4-pin ATX power supply, please plug it along Pin 1 and Pin 5. *Connecting an ATX 12V 8-pin cable to ATX12V2 is optional. ***Warning: Please make sure that the power cable connected is for the CPU and not the graphics card. Do not plug the PCIe power cable to this connector.**

SPI TPM Header
(13-pin SPI_TPM_J1)
(see p.9, No. 26)

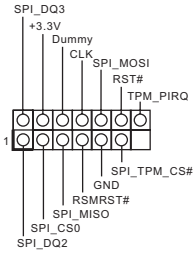

This connector supports SPI Trusted Platform Module (TPM) system, which can securely store keys, digital certificates, passwords, and data. A TPM system also helps enhance network security, protects digital identities, and ensures platform integrity.

RGB LED Headers
(4-pin RGB_LED1)
(see p.9, No. 28)

(4-pin RGB_LED2)
(see p.9, No. 10)

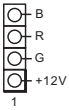

These two RGB headers are used to connect RGB LED extension cable which allows users to choose from various LED lighting effects.
Caution: Never install the RGB LED cable in the wrong orientation; otherwise, the cable may be damaged.
*Please refer to page 72 for further instructions on these two headers.

Addressable LED Headers
(3-pin ADDR_LED1)
(see p.9, No. 31)
(3-pin ADDR_LED2)
(see p.9, No. 3)

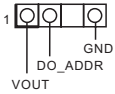

These two Addressable headers are used to connect Addressable LED extension cable which allows users to choose from various LED lighting effects.
Caution: Never install the Addressable LED cable in the wrong orientation; otherwise, the cable may be damaged.
*Please refer to page 73 for further instructions on this header.

2.7 Smart Switches

The motherboard has four smart switches: Power Button, Reset Button, Clear CMOS Buttons and BIOS Flashback Button, allowing users to quickly turn on/off the system, reset the system, clear the CMOS values or flash the BIOS.

Power Button (PWRBTN1) (see p.9, No. 21)		Power Button allows users to quickly turn on/off the system.
Reset Button (RSTBTN1) (see p.9, No. 23)		Reset Button allows users to quickly reset the system.
Clear CMOS Button (CLRCBTN1) (see p.9, No. 22)		Clear CMOS Button allows users to quickly clear the CMOS values.

BIOS Flashback Button
(BIOS_FB1)
(see p.11, No. 17)

BIOS Flashback Switch allows users to flash the BIOS.

ASRock BIOS Flashback feature allows you to update BIOS without powering on the system, even without CPU.

To use the USB BIOS Flashback function, Please follow the steps below.

1. Download the latest BIOS file from ASRock's website : http://www.asrock.com.
2. Copy the BIOS file to your USB flash drive. Please make sure the file system of your USB flash drive must be FAT32.
3. Extract BIOS file from the zip file.
4. Rename the file to "**creative.rom**" and save it to the root directory of X: USB flash drive.
5. Plug the 24 pin power connector to the motherboard. Then turn on the power supply's AC switch.
   *There is no need to power on the system.
6. Then plug your USB drive to the USB BIOS Flashback port.
7. Press the BIOS Flashback Switch for about three seconds. Then the LED starts to blink.
8. Wait until the LED stops blinking, indicating that BIOS flashing has been completed.
   *If the LED light turns solid green, this means that the BIOS Flashback is not operating properly. Please make sure that you plug the USB drive to the USB BIOS Flashback port.
   **If the LED does not light up at all then please disconnect power from the system and remove/disconnect the CMOS battery from the motherboard for several minutes. Reconnect power and battery and try again.

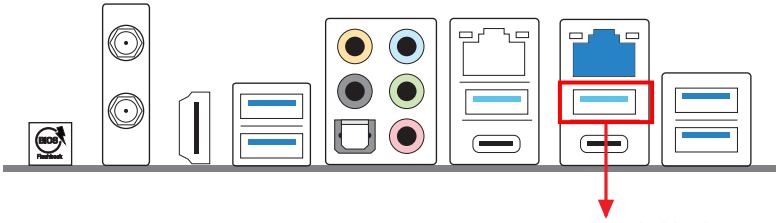

2.8 Dr. Debug

Dr. Debug is used to provide code information, which makes troubleshooting even easier. Please see the diagrams below for reading the Dr. Debug codes.

Code	Description
0x10	PEI_CORE_STARTED
0x11	PEI_CAR_CPU_INIT
0x15	PEI_CAR_NB_INIT
0x19	PEI_CAR_SB_INIT
0x31	PEI_MEMORY_INSTALLED
0x32	PEI_CPU_INIT
0x33	PEI_CPU_CACHE_INIT
0x34	PEI_CPU_AP_INIT
0x35	PEI_CPU_BSP_SELECT
0x36	PEI_CPU_SMM_INIT
0x37	PEI_MEM_NB_INIT
0x3B	PEI_MEM_SB_INIT
0x4F	PEI_DXE_IPL_STARTED
0x60	DXE_CORE_STARTED
0x61	DXE_NVRAM_INIT
0x62	DXE_SBRUN_INIT

0x63	DXE_CPU_INIT
0x68	DXE_NB_HB_INIT
0x69	DXE_NB_INIT
0x6A	DXE_NB_SMM_INIT
0x70	DXE_SB_INIT
0x71	DXE_SB_SMM_INIT
0x72	DXE_SB_DEVICES_INIT
0x78	DXE_ACPI_INIT
0x79	DXE_CSM_INIT
0x90	DXE_BDS_STARTED
0x91	DXE_BDS_CONNECT_DRIVERS
0x92	DXE_PCI_BUS_BEGIN
0x93	DXE_PCI_BUS_HPC_INIT
0x94	DXE_PCI_BUS_ENUM
0x95	DXE_PCI_BUS_REQUEST_RESOURCES
0x96	DXE_PCI_BUS_ASSIGN_RESOURCES
0x97	DXE_CON_OUT_CONNECT
0x98	DXE_CON_IN_CONNECT

0x99	DXE_SIO_INIT
0x9A	DXE_USB_BEGIN
0x9B	DXE_USB_RESET
0x9C	DXE_USB_DETECT
0x9D	DXE_USB_ENABLE
0xA0	DXE_IDE_BEGIN
0xA1	DXE_IDE_RESET
0xA2	DXE_IDE_DETECT
0xA3	DXE_IDE_ENABLE
0xA4	DXE_SCSI_BEGIN
0xA5	DXE_SCSI_RESET
0xA6	DXE_SCSI_DETECT
0xA7	DXE_SCSI_ENABLE
0xA8	DXE_SETUP_VERIFYING_PASSWORD
0xA9	DXE_SETUP_START
0xAB	DXE_SETUP_INPUT_WAIT
0xAD	DXE_READY_TO_BOOT
0xAE	DXE_LEGACY_BOOT

0xAF	DXE_EXIT_BOOT_SERVICES
0xB0	RT_SET_VIRTUAL_ADDRESS_MAP_BEGIN
0xB1	RT_SET_VIRTUAL_ADDRESS_MAP_END
0xB2	DXE_LEGACY_OPROM_INIT
0xB3	DXE_RESET_SYSTEM
0xB4	DXE_USB_HOTPLUG
0xB5	DXE_PCI_BUS_HOTPLUG
0xB6	DXE_NVRAM_CLEANUP
0xB7	DXE_CONFIGURATION_RESET
0xF0	PEI_RECOVERY_AUTO
0xF1	PEI_RECOVERY_USER
0xF2	PEI_RECOVERY_STARTED
0xF3	PEI_RECOVERY_CAPSULE_FOUND
0xF4	PEI_RECOVERY_CAPSULE_LOADED
0xE0	PEI_S3_STARTED
0xE1	PEI_S3_BOOT_SCRIPT
0xE2	PEI_S3_VIDEO_REPOST

0xE3	PEI_S3_OS_WAKE
0x50	PEI_MEMORY_INVALID_TYPE
0x53	PEI_MEMORY_NOT_DETECTED
0x55	PEI_MEMORY_NOT_INSTALLED
0x57	PEI_CPU_MISMATCH
0x58	PEI_CPU_SELF_TEST_FAILED
0x59	PEI_CPU_NO_MICROCODE
0x5A	PEI_CPU_ERROR
0x5B	PEI_RESET_NOT_AVAILABLE
0xD0	DXE_CPU_ERROR
0xD1	DXE_NB_ERROR
0xD2	DXE_SB_ERROR
0xD3	DXE_ARCH_PROTOCOL_NOT_AVAILABLE
0xD4	DXE_PCI_BUS_OUT_OF_RESOURCES
0xD5	DXE_LEGACY_OPROM_NO_SPACE
0xD6	DXE_NO_CON_OUT
0xD7	DXE_NO_CON_IN

0xD8	DXE_INVALID_PASSWORD
0xD9	DXE_BOOT_OPTION_LOAD_ERROR
0xDA	DXE_BOOT_OPTION_FAILED
0xDB	DXE_FLASH_UPDATE_FAILED
0xDC	DXE_RESET_NOT_AVAILABLE
0xE8	PEI_MEMORY_S3_RESUME_FAILED
0xE9	PEI_S3_RESUME_PPI_NOT_FOUND
0xEA	PEI_S3_BOOT_SCRIPT_ERROR
0xEB	PEI_S3_OS_WAKE_ERROR

2.9 CrossFireX™ , 3-Way CrossFireX™ and Quad CrossFireX™ Operation Guide

This motherboard supports CrossFireX™, 3-way CrossFireX™ and Quad CrossFireX™ that allows you to install up to three identical PCI Express x16 graphics cards.

1. *You should only use identical CrossFireX™-ready graphics cards that are AMD certified.*
2. *Make sure that your graphics card driver supports AMD CrossFireX™ technology. Download the drivers from the AMD's website: www.amd.com*
3. *Make sure that your power supply unit (PSU) can provide at least the minimum power your system requires. It is recommended to use a AMD certified PSU. Please refer to the AMD's website for details.*
4. *If you pair a 12-pipe CrossFireX™ Edition card with a 16-pipe card, both cards will operate as 12-pipe cards while in CrossFireX™ mode.*
5. *Different CrossFireX™ cards may require different methods to enable CrossFireX™. Please refer to AMD graphics card manuals for detailed installation guide.*

2.9.1 Installing Two CrossFireX™-Ready Graphics Cards

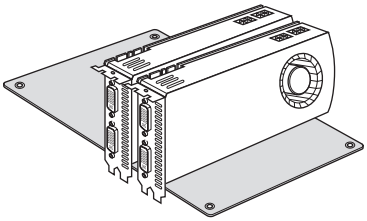

Step 1

Insert one graphics card into PCIE1 slot and the other graphics card to PCIE2 slot. Make sure that the cards are properly seated on the slots.

CrossFire Bridge

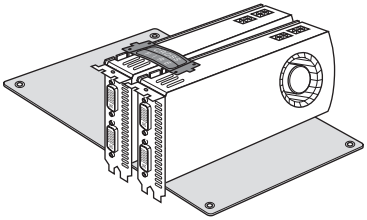

Step 2

Connect two graphics cards by installing a CrossFire Bridge on the CrossFire Bridge Interconnects on the top of the graphics cards. (The CrossFire Bridge is provided with the graphics card you purchase, not bundled with this motherboard. Please refer to your graphics card vendor for details.)

English

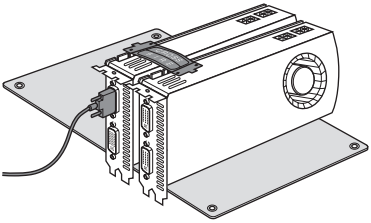

Step 3

Connect a VGA/DVI/DP/HDMI cable from the monitor to the corresponding port on the graphics card installed to the PCIE1 slot.

2.9.2 Installing Three CrossFireX™-Ready Graphics Cards

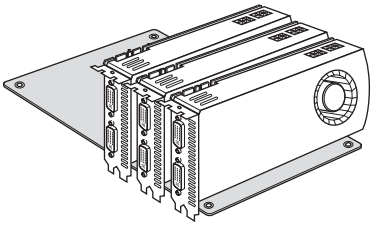

Step 1

Insert one graphics card into PCIE1 slot, another graphics card to PCIE2 slot, and the other graphics card to PCIE4 slot. Make sure that the cards are properly seated on the slots.

CrossFire Bridge

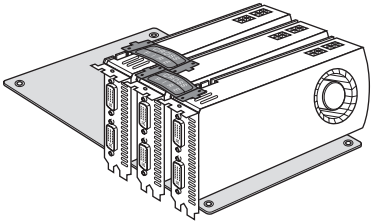

Step 2

Use one CrossFire Bridge to connect the graphics cards on PCIE1 and PCIE2 slots, and use the other CrossFire Bridge to connect the graphics cards on PCIE2 and PCIE4 slots. (The CrossFire Bridge is provided with the graphics card you purchase, not bundled with this motherboard. Please refer to your graphics card vendor for details.)

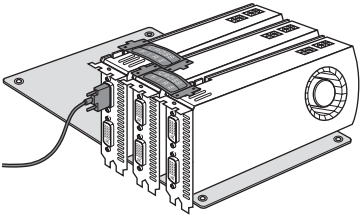

Step 3

Connect a VGA/DVI/DP/HDMI cable from the monitor to the corresponding port on the graphics card installed to the PCIE1 slot.

2.9.3 Driver Installation and Setup

Step 1

Power on your computer and boot into OS.

Step 2

Remove the AMD drivers if you have any VGA drivers installed in your system.

> *The Catalyst Uninstaller is an optional download. We recommend using this utility to uninstall any previously installed Catalyst drivers prior to installation. Please check AMD's website for AMD driver updates.*

Step 3

Install the required drivers and CATALYST Control Center then restart your computer. Please check AMD's website for details.

AMD Catalyst Control Center

Step 4

Double-click the **AMD Catalyst Control Center** icon in the Windows® system tray.

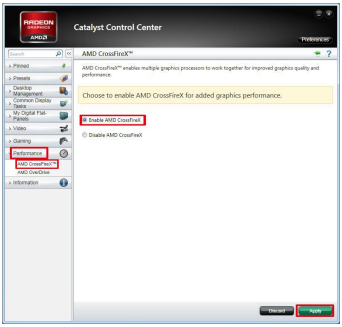

Step 5

In the left pane, click **Performance** and then **AMD CrossFireX™**. Then select **Enable AMD CrossFireX** and click **Apply**. Select the GPU number according to your graphics card and click **Apply**.

English

2.10 M.2_SSD (NGFF) Module Installation Guide (M2_1)

The M.2, also known as the Next Generation Form Factor (NGFF), is a small size and versatile card edge connector that aims to replace mPCIe and mSATA. The Hyper M.2 Socket (M2_1) supports M Key type 2280 M.2 PCI Express module up to Gen4x4 (64 Gb/s) (with 11th Gen Intel® Core™ Processors) or Gen3x4 (32 Gb/s) (with 10th Gen Intel® Core™ Processors).

Installing the M.2_SSD (NGFF) Module

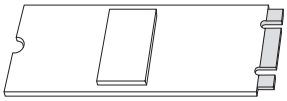

Step 1

Prepare a M.2_SSD (NGFF) module and the screw.

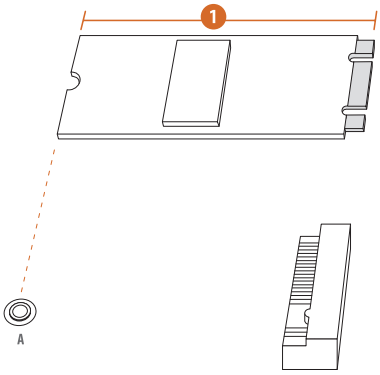

Step 2

Depending on the PCB type and length of your M.2_SSD (NGFF) module, find the corresponding nut location to be used.

No.	1
Nut Location	A
PCB Length	8cm
Module Type	Type2280

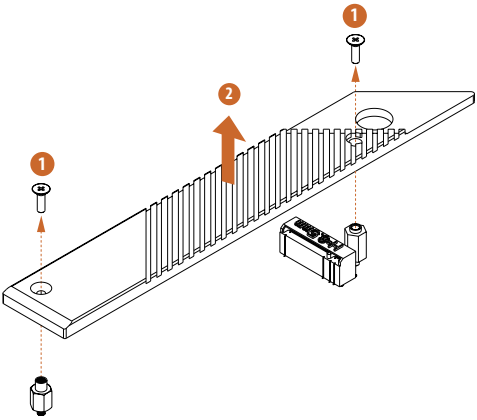

Step 3

Before installing a M.2 (NGFF) SSD module, please loosen the screws to remove the M.2 heatsink.
*Please remove the protective films on the bottom side of the M.2 heatsink before you install a M.2 SSD module.

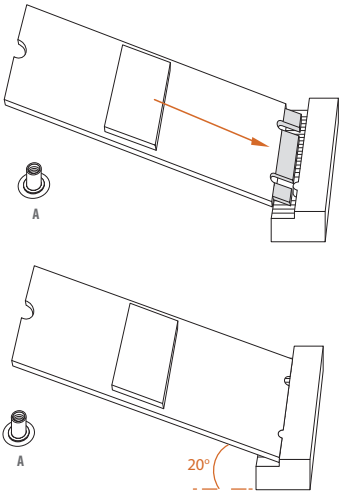

Step 4

Align and gently insert the M.2 (NGFF) SSD module into the M.2 slot. Please be aware that the M.2 (NGFF) SSD module only fits in one orientation.

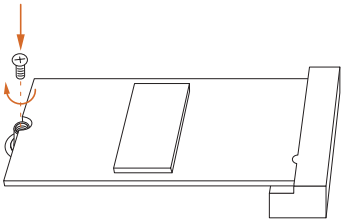

Step 5

Tighten the screw that come with the package with a screwdriver to secure the module into place.

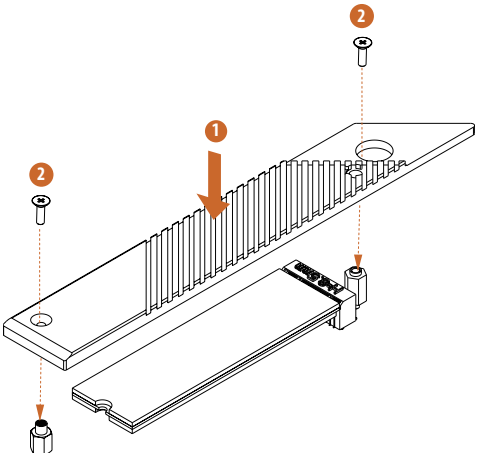

Step 6

Tighten the screw with a screwdriver to secure the M.2 heatsink into place. Please do not overtighten the screw as this might damage the module and M.2 heatsink.

M.2_SSD (NGFF) Module Support List (M2_1)

Vendor	Interface	P/N
ADATA	PCIe3 x4	ASX7000NP-128GT-C
ADATA	PCIe3 x4	ASX8000NP-256GM-C
ADATA	PCIe3 x4	ASX7000NP-256GT-C
ADATA	PCIe3 x4	ASX8000NP-512GM-C
ADATA	PCIe3 x4	ASX7000NP-512GT-C
Apacer	PCIe3 x4	AP240GZ280
Corsair	PCIe3 x4	CSSD-F240GBMP500
Intel	PCIe3 x4	SSDPEKKF256G7
Intel	PCIe3 x4	SSDPEKKF512G7
Kingston	PCIe3 x4	SKC1000/480G
Kingston	PCIe2 x4	SH2280S3/480G
OCZ	PCIe3 x4	RVD400 -M2280-512G (NVME)
PATRIOT	PCIe3 x4	PH240GPM280SSDR NVME
Plextor	PCIe3 x4	PX-128M8PeG
Plextor	PCIe3 x4	PX-1TM8PeG
Plextor	PCIe3 x4	PX-256M8PeG
Plextor	PCIe3 x4	PX-512M8PeG
Plextor	PCIe	PX-G256M6e
Plextor	PCIe	PX-G512M6e
Samsung	PCIe3 x4	SM961 MZVPW128HEGM (NVM)
Samsung	PCIe3 x4	PM961 MZVLW128HEGR (NVME)
Samsung	PCIe3 x4	960 EVO (MZ-V6E250) (NVME)
Samsung	PCIe3 x4	960 EVO (MZ-V6E250BW) (NVME)
Samsung	PCIe3 x4	SM951 (NVME)
Samsung	PCIe3 x4	SM951 (MZHPV256HDGL)
Samsung	PCIe3 x4	SM951 (MZHPV512HDGL)
Samsung	PCIe3 x4	SM951 (NVME)
Samsung	PCIe x4	XP941-512G (MZHPU512HCGL)
SanDisk	PCIe	SD6PP4M-128G
SanDisk	PCIe	SD6PP4M-256G
TEAM	PCIe3 x4	TM8FP2240G0C101
TEAM	PCIe3 x4	TM8FP2480GC110
WD	PCIe3 x4	WDS256G1X0C-00ENX0 (NVME)
WD	PCIe3 x4	WDS512G1X0C-00ENX0 (NVME)

For the latest updates of M.2_SSD (NFGG) module support list, please visit our website for details: http://www.asrock.com

2.11 M.2_SSD (NGFF) Module Installation Guide (M2_2)

The M.2, also known as the Next Generation Form Factor (NGFF), is a small size and versatile card edge connector that aims to replace mPCIe and mSATA. The Ultra M.2 Socket (M2_2) supports M Key type 2260/2280 M.2 SATA3 6.0 Gb/s module and M.2 PCI Express module up to Gen3 x4 (32 Gb/s).

* M2_2, SATA3_0 and SATA3_1 share lanes. If either one of them is in use, the others will be disabled.

Installing the M.2_SSD (NGFF) Module

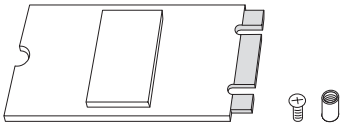

Step 1

This motherboard supports M.2_SSD (NGFF) module type 2260 and 2280 only. Prepare a proper PCB lenth of module, the screw and the standoff.

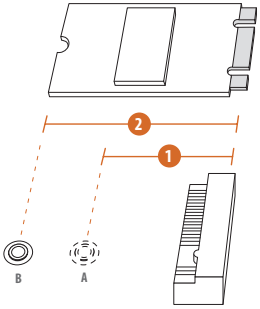

Step 2

Depending on the PCB type and length of your M.2_SSD (NGFF) module, find the corresponding nut location to be used.

No.	1	2
Nut Location	A	B
PCB Length	6cm	8cm
Module Type	Type2260	Type 2280

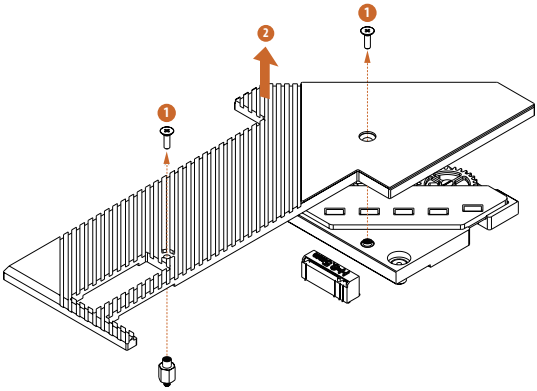

Step 3

Before installing a M.2 (NGFF) SSD module, please loosen the screws to remove the M.2 heatsink.
*Please remove the protective films on the bottom side of the M.2 heatsink before you install a M.2 SSD module.

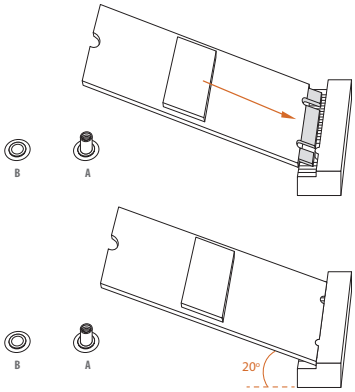

Step 4

Prepare the M.2 standoff that comes with the package. Then hand tighten the standoff into the desired nut location on the motherboard. Align and gently insert the M.2 (NGFF) SSD module into the M.2 slot. Please be aware that the M.2 (NGFF) SSD module only fits in one orientation.

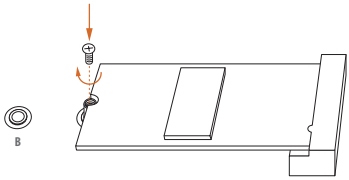

Step 5

Tighten the screw that come with the package with a screwdriver to secure the module into place.

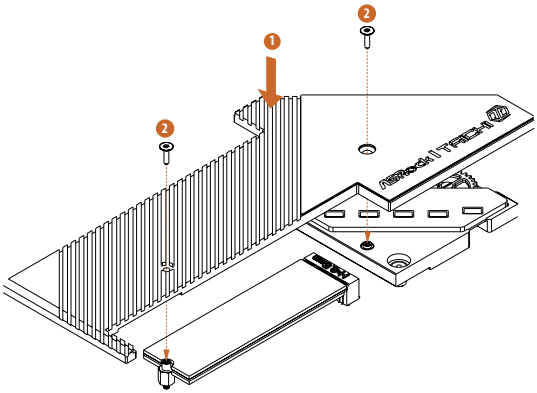

Step 6

Tighten the screw with a screwdriver to secure the module and M.2 heatsink into place. Please do not overtighten the screw as this might damage the module and M.2 heatsink.

M.2_SSD (NGFF) Module Support List (M2_2)

Vendor	Interface	P/N
ADATA	SATA3	AXNS381E-128GM-B
ADATA	SATA3	AXNS381E-256GM-B
ADATA	SATA3	ASU800NS38-256GT-C
ADATA	SATA3	ASU800NS38-512GT-C
ADATA	PCIe3 x4	ASX7000NP-128GT-C
ADATA	PCIe3 x4	ASX8000NP-256GM-C
ADATA	PCIe3 x4	ASX7000NP-256GT-C
ADATA	PCIe3 x4	ASX8000NP-512GM-C
ADATA	PCIe3 x4	ASX7000NP-512GT-C
Apacer	PCIe3 x4	AP240GZ280
Corsair	PCIe3 x4	CSSD-F240GBMP500
Crucial	SATA3	CT120M500SSD4
Crucial	SATA3	CT240M500SSD4
Intel	SATA3	Intel SSDSCKGW080A401/80G
Intel	PCIe3 x4	SSDPEKKF256G7
Intel	PCIe3 x4	SSDPEKKF512G7
Kingston	SATA3	SM2280S3
Kingston	PCIe3 x4	SKC1000/480G
Kingston	PCIe2 x4	SH2280S3/480G
OCZ	PCIe3 x4	RVD400 -M2280-512G (NVME)
PATRIOT	PCIe3 x4	PH240GPM280SSDR NVME
Plextor	PCIe3 x4	PX-128M8PeG
Plextor	PCIe3 x4	PX-1TM8PeG
Plextor	PCIe3 x4	PX-256M8PeG
Plextor	PCIe3 x4	PX-512M8PeG
Plextor	PCIe	PX-G256M6e
Plextor	PCIe	PX-G512M6e
Samsung	PCIe3 x4	SM961 MZVPW128HEGM (NVM)
Samsung	PCIe3 x4	PM961 MZVLW128HEGR (NVME)
Samsung	PCIe3 x4	960 EVO (MZ-V6E250) (NVME)
Samsung	PCIe3 x4	960 EVO (MZ-V6E250BW) (NVME)
Samsung	PCIe3 x4	SM951 (NVME)
Samsung	PCIe3 x4	SM951 (MZHPV256HDGL)
Samsung	PCIe3 x4	SM951 (MZHPV512HDGL)
Samsung	PCIe3 x4	SM951 (NVME)
Samsung	PCIe x4	XP941-512G (MZHPU512HCGL)
SanDisk	PCIe	SD6PP4M-128G
SanDisk	PCIe	SD6PP4M-256G
Team	SATA3	TM8PS4128GMC105
Team	SATA3	TM8PS4256GMC105

TEAM	PCIe3 x4	TM8FP2240G0C101
TEAM	PCIe3 x4	TM8FP2480GC110
Transcend	SATA3	TS512GMTS600
Transcend	SATA3	TS512GMTS800
V-Color	SATA3	VLM100-120G-2280B-RD
V-Color	SATA3	VLM100-240G-2280RGB
V-Color	SATA3	VSM100-240G-2280
V-Color	SATA3	VLM100-240G-2280B-RD
WD	SATA3	WDS100T1B0B-00AS40
WD	SATA3	WDS240G1G0B-00RC30
WD	PCIe3 x4	WDS256G1X0C-00ENX0 (NVME)
WD	PCIe3 x4	WDS512G1X0C-00ENX0 (NVME)

For the latest updates of M.2_SSD (NFGG) module support list, please visit our website for details: http://www.asrock.com

2.12 M.2_SSD (NGFF) Module Installation Guide (M2_3)

The M.2, also known as the Next Generation Form Factor (NGFF), is a small size and versatile card edge connector that aims to replace mPCIe and mSATA. The Ultra M.2 Socket (M2_3) supports M Key type 2230/2242/2260/2280/22110 M.2 SATA3 6.0 Gb/s module and M.2 PCI Express module up to Gen3 x4 (32 Gb/s).

* M2_3, SATA3_4, SATA3_5 and PCIE4 share lanes. If either one of them is in use, the others will be disabled.

* Enter the BIOS Setup and go to Advanced\USB Configuration to disable "Third Party USB 3.2 Controller"; otherwise, M2_3 will support M.2 PCI Express module up to Gen3 x2 (16 Gb/s) by default.

Installing the M.2_SSD (NGFF) Module

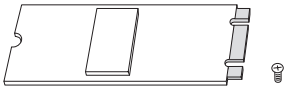

Step 1

Prepare a M.2_SSD (NGFF) module and the screw.

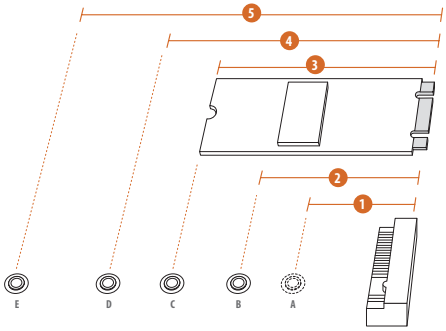

Step 2

Depending on the PCB type and length of your M.2_SSD (NGFF) module, find the corresponding nut location to be used.

No.	1	2	3	4	5
Nut Location	A	B	C	D	E
PCB Length	3cm	4.2cm	6cm	8cm	11cm
Module Type	Type2230	Type 2242	Type2260	Type 2280	Type 22110

English

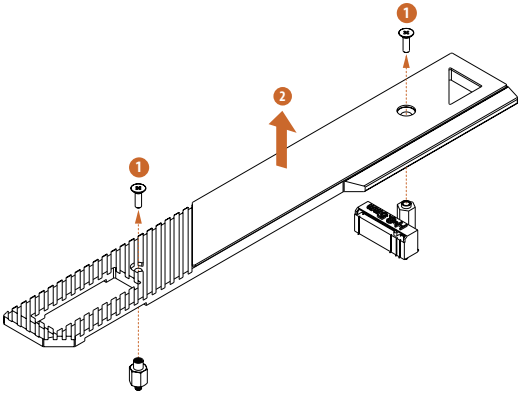

Step 3

Before installing a M.2 (NGFF) SSD module, please loosen the screws to remove the M.2 heatsink.
*Please remove the protective films on the bottom side of the M.2 heatsink before you install a M.2 SSD module.

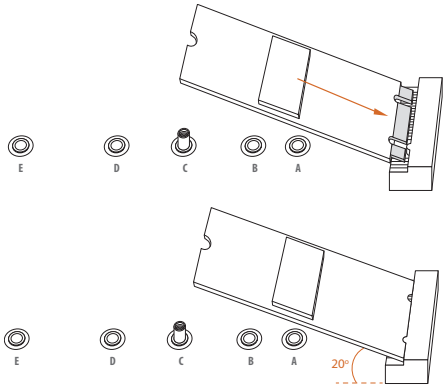

Step 4

Prepare the M.2 standoff that comes with the package. Then hand tighten the standoff into the desired nut location on the motherboard. Align and gently insert the M.2 (NGFF) SSD module into the M.2 slot. Please be aware that the M.2 (NGFF) SSD module only fits in one orientation.

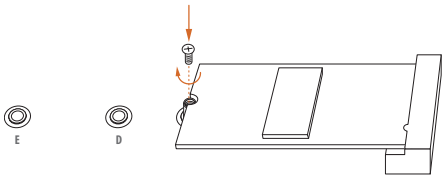

Step 5

Tighten the screw that come with the package with a screwdriver to secure the module into place.

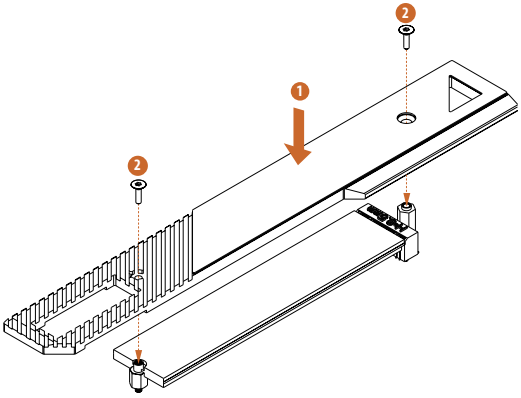

Step 6

Tighten the screw with a screwdriver to secure the module and M.2 heatsink into place. Please do not overtighten the screw as this might damage the module and M.2 heatsink.

M.2_SSD (NGFF) Module Support List (M2_3)

Vendor	Interface	P/N
ADATA	SATA3	AXNS330E-32GM-B
ADATA	SATA3	AXNS381E-128GM-B
ADATA	SATA3	AXNS381E-256GM-B
ADATA	SATA3	ASU800NS38-256GT-C
ADATA	SATA3	ASU800NS38-512GT-C
ADATA	PCIe3 x4	ASX7000NP-128GT-C
ADATA	PCIe3 x4	ASX8000NP-256GM-C
ADATA	PCIe3 x4	ASX7000NP-256GT-C
ADATA	PCIe3 x4	ASX8000NP-512GM-C
ADATA	PCIe3 x4	ASX7000NP-512GT-C
Apacer	PCIe3 x4	AP240GZ280
Corsair	PCIe3 x4	CSSD-F240GBMP500
Crucial	SATA3	CT120M500SSD4
Crucial	SATA3	CT240M500SSD4
Intel	SATA3	Intel SSDSCKGW080A401/80G
Intel	PCIe3 x4	SSDPEKKF256G7
Intel	PCIe3 x4	SSDPEKKF512G7
Kingston	SATA3	SM2280S3
Kingston	PCIe3 x4	SKC1000/480G
Kingston	PCIe2 x4	SH2280S3/480G
OCZ	PCIe3 x4	RVD400 -M2280-512G (NVME)
PATRIOT	PCIe3 x4	PH240GPM280SSDR NVME
Plextor	PCIe3 x4	PX-128M8PeG
Plextor	PCIe3 x4	PX-1TM8PeG
Plextor	PCIe3 x4	PX-256M8PeG
Plextor	PCIe3 x4	PX-512M8PeG
Plextor	PCIe	PX-G256M6e
Plextor	PCIe	PX-G512M6e
Samsung	PCIe3 x4	SM961 MZVPW128HEGM (NVM)
Samsung	PCIe3 x4	PM961 MZVLW128HEGR (NVME)
Samsung	PCIe3 x4	960 EVO (MZ-V6E250) (NVME)
Samsung	PCIe3 x4	960 EVO (MZ-V6E250BW) (NVME)
Samsung	PCIe3 x4	SM951 (NVME)
Samsung	PCIe3 x4	SM951 (MZHPV256HDGL)
Samsung	PCIe3 x4	SM951 (MZHPV512HDGL)
Samsung	PCIe3 x4	SM951 (NVME)
Samsung	PCIe x4	XP941-512G (MZHPU512HCGL)
SanDisk	PCIe	SD6PP4M-128G
SanDisk	PCIe	SD6PP4M-256G
Team	SATA3	TM4PS4128GMC105
Team	SATA3	TM4PS4256GMC105
Team	SATA3	TM8PS4128GMC105
Team	SATA3	TM8PS4256GMC105

TEAM	PCIe3 x4	TM8FP2240G0C101
TEAM	PCIe3 x4	TM8FP2480GC110
Transcend	SATA3	TS256GMTS400
Transcend	SATA3	TS512GMTS600
Transcend	SATA3	TS512GMTS800
V-Color	SATA3	VLM100-120G-2280B-RD
V-Color	SATA3	VLM100-240G-2280RGB
V-Color	SATA3	VSM100-240G-2280
V-Color	SATA3	VLM100-240G-2280B-RD
WD	SATA3	WDS100T1B0B-00AS40
WD	SATA3	WDS240G1G0B-00RC30
WD	PCIe3 x4	WDS256G1X0C-00ENX0 (NVME)
WD	PCIe3 x4	WDS512G1X0C-00ENX0 (NVME)

For the latest updates of M.2_SSD (NFGG) module support list, please visit our website for details: http://www.asrock.com

Chapter 3 Software and Utilities Operation

3.1 Installing Drivers

The Support CD that comes with the motherboard contains necessary drivers and useful utilities that enhance the motherboard's features.

Running The Support CD

To begin using the support CD, insert the CD into your CD-ROM drive. The CD automatically displays the Main Menu if "AUTORUN" is enabled in your computer. If the Main Menu does not appear automatically, locate and double click on the file "ASRSETUP.EXE" in the Support CD to display the menu.

Drivers Menu

The drivers compatible to your system will be auto-detected and listed on the support CD driver page. Please click **Install All** or follow the order from top to bottom to install those required drivers. Therefore, the drivers you install can work properly.

Utilities Menu

The Utilities Menu shows the application software that the motherboard supports. Click on a specific item then follow the installation wizard to install it.

3.2 ASRock Motherboard Utility (A-Tuning)

ASRock Motherboard Utility (A-Tuning) is ASRock's multi purpose software suite with a new interface, more new features and improved utilities.

3.2.1 Installing ASRock Motherboard Utility (A-Tuning)

ASRock Motherboard Utility (A-Tuning) can be downloaded from ASRock Live Update & APP Shop. After the installation, you will find the icon "ASRock Motherboard Utility (A-Tuning)" on your desktop. Double-click the "ASRock Motherboard Utility (A-Tuning)" icon, ASRock Motherboard Utility (A-Tuning) main menu will pop up.

3.2.2 Using ASRock Motherboard Utility (A-Tuning)

There are five sections in ASRock Motherboard Utility (A-Tuning) main menu: Operation Mode, OC Tweaker, System Info, FAN-Tastic Tuning and Settings.

Operation Mode

Choose an operation mode for your computer.

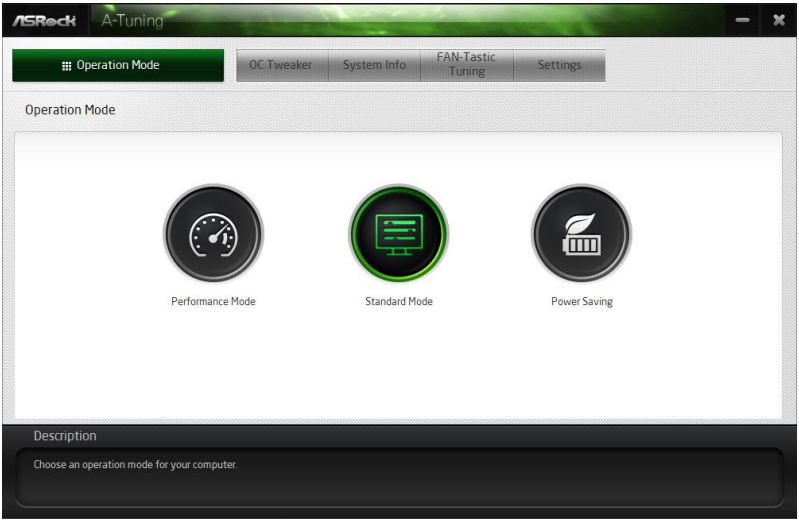

English

OC Tweaker

Configurations for overclocking the system.

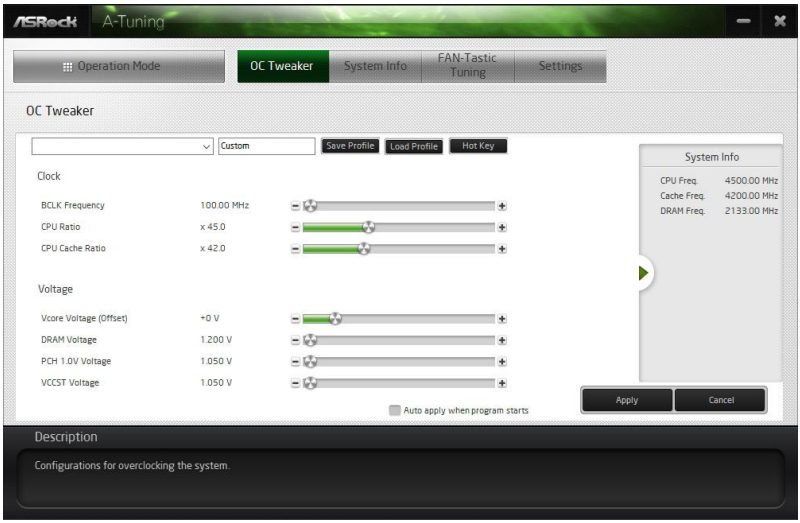

System Info

View information about the system.

*The System Browser tab may not appear for certain models.

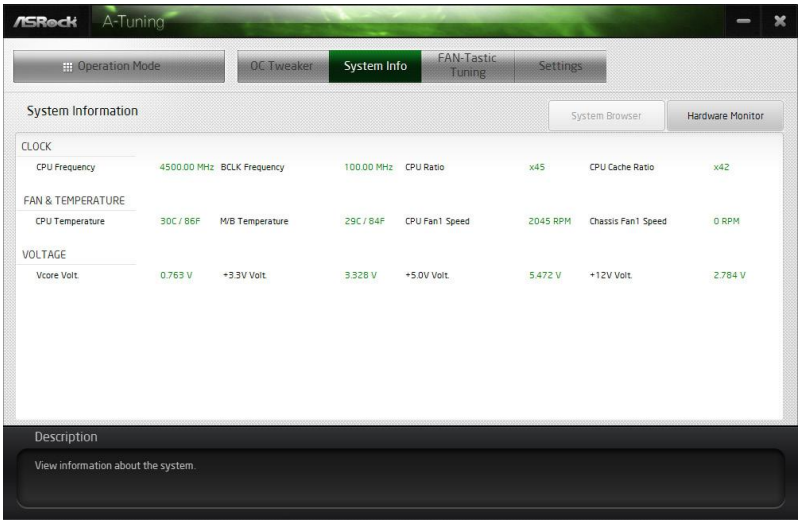

English

FAN-Tastic Tuning

Configure up to five different fan speeds using the graph. The fans will automatically shift to the next speed level when the assigned temperature is met.

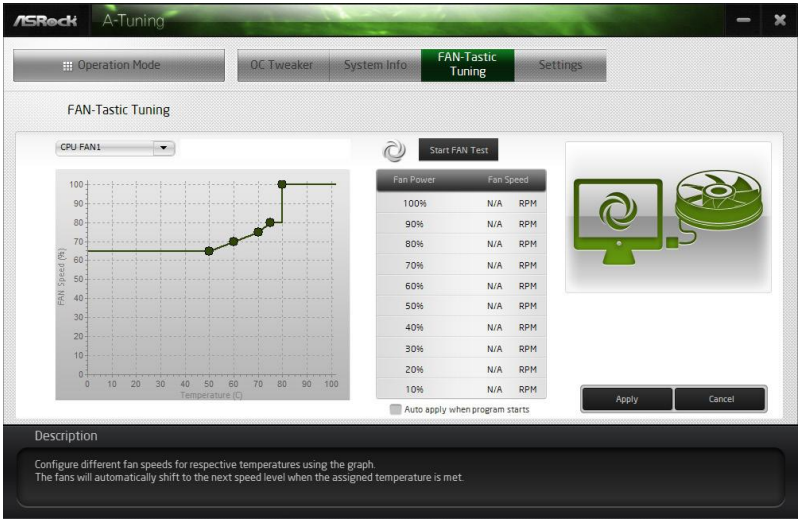

Settings

Configure ASRock ASRock Motherboard Utility (A-Tuning). Click to select "Auto run at Windows Startup" if you want ASRock Motherboard Utility (A-Tuning) to be launched when you start up the Windows operating system.

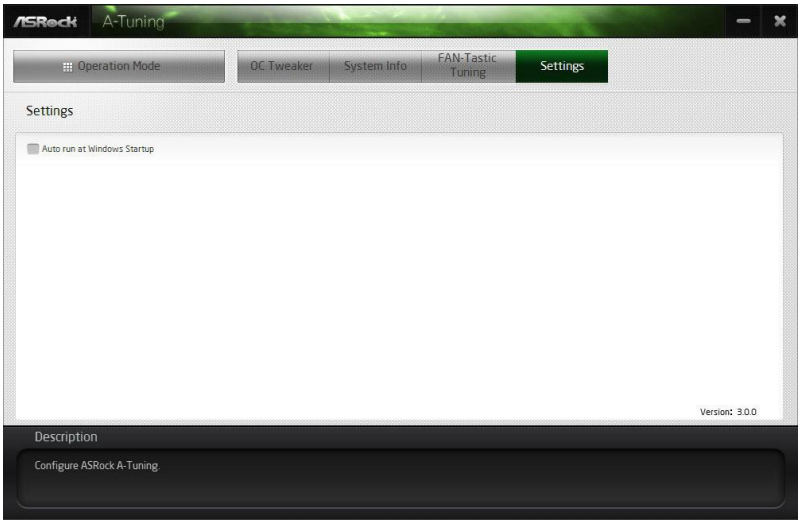

English

3.3 ASRock Live Update & APP Shop

The ASRock Live Update & APP Shop is an online store for purchasing and downloading software applications for your ASRock computer. You can quickly and easily install various apps and support utilities. With ASRock Live Update & APP Shop, you can optimize your system and keep your motherboard up to date simply with a few clicks.

Double-click on your desktop to access ASRock Live Update & APP Shop utility.

**You need to be connected to the Internet to download apps from the ASRock Live Update & APP Shop.*

3.3.1 UI Overview

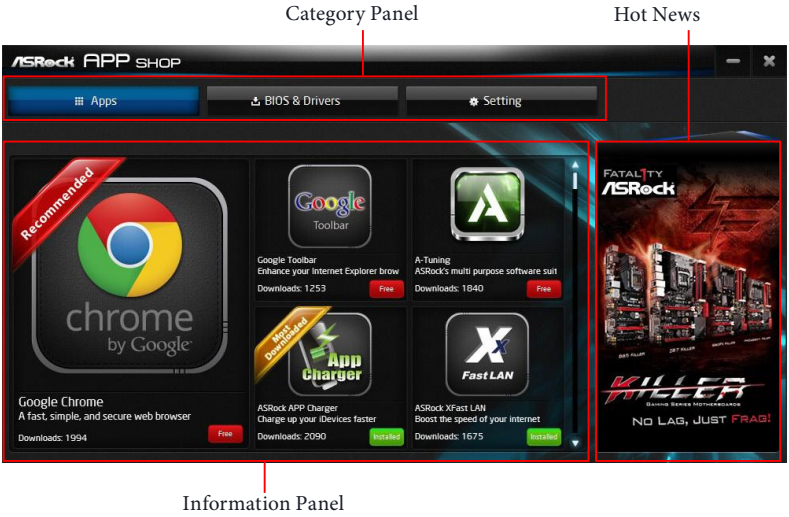

Category Panel: The category panel contains several category tabs or buttons that when selected the information panel below displays the relative information.

Information Panel: The information panel in the center displays data about the currently selected category and allows users to perform job-related tasks.

Hot News: The hot news section displays the various latest news. Click on the image to visit the website of the selected news and know more.

English

3.3.2 Apps

When the "Apps" tab is selected, you will see all the available apps on screen for you to download.

Installing an App

Step 1

Find the app you want to install.

The most recommended app appears on the left side of the screen. The other various apps are shown on the right. Please scroll up and down to see more apps listed.

You can check the price of the app and whether you have already intalled it or not.

Free - The red icon displays the price or "Free" if the app is free of charge.

Installed - The green "Installed" icon means the app is installed on your computer.

Step 2

Click on the app icon to see more details about the selected app.

English

Step 3

If you want to install the app, click on the red icon Free to start downloading.

Step 4

When installation completes, you can find the green "Installed" icon appears on the upper right corner.

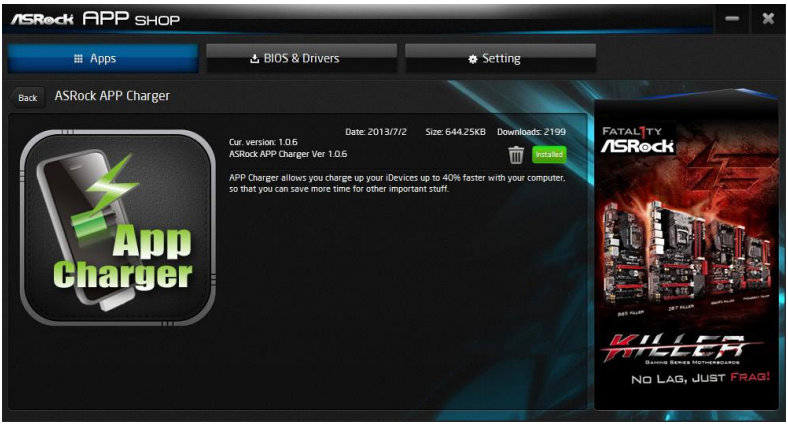

To uninstall it, simply click on the trash can icon .
*The trash icon may not appear for certain apps.

English

Upgrading an App

You can only upgrade the apps you have already installed. When there is an available new version for your app, you will find the mark of "New Version"

appears below the installed app icon.

Step 1

Click on the app icon to see more details.

Step 2

Click on the yellow icon

to start upgrading.

English

3.3.3 BIOS & Drivers

Installing BIOS or Drivers

When the "BIOS & Drivers" tab is selected, you will see a list of recommended or critical updates for the BIOS or drivers. Please update them all soon.

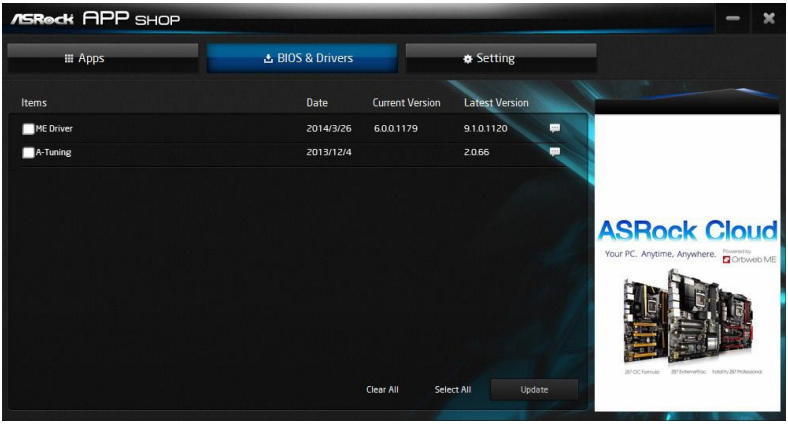

Step 1

Please check the item information before update. Click on to see more details.

Step 2

Click to select one or more items you want to update.

Step 3

Click Update to start the update process.

English

3.3.4 Setting

In the "Setting" page, you can change the language, select the server location, and determine if you want to automatically run the ASRock Live Update & APP Shop on Windows startup.

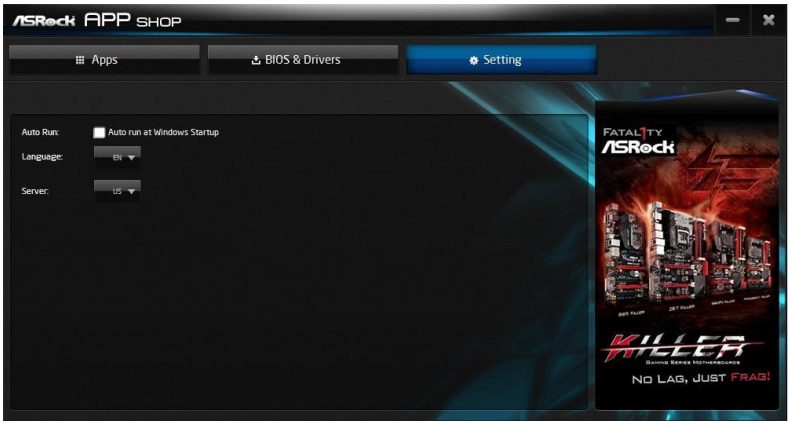

English

3.4 Nahimic Audio

Nahimic audio software provides an incredible high definition sound technology which boosts the audio and voice performance of your system. Nahimic Audio interface is composed of four tabs: Audio, Microphone, Sound Tracker and Settings.

There are four functions in Nahimic audio :

No.	Function	Description
1	Audio	From this tab, you can mute the current audio device, choose between four factory audio profiles, turn all audio effects on/off, restores the current profile to its default settings and access Surround Sound and various features.
2	Microphone	From this tab, you can mute the current mic device, choose between two factory mic profiles, turn/off all microphone effects, restore the current profile to its default settings, and access Static Noise Suppression and various features.
3	Sound Tracker	The Sound Tracker provides a visual indication localizing the sources of the sounds while in a game. These are represented by dynamic segments pointing the direction of the sounds: the more opaque they are, the stronger the sounds are.
4	Settings	From this tab, you can access all settings and information of the software.

English

3.5 ASRock Polychrome SYNC

ASRock Polychrome SYNC is a lighting control utility specifically designed for unique individuals with sophisticated tastes to build their own stylish colorful lighting system. Simply by connecting the LED strip, you can customize various lighting schemes and patterns, including Static, Breathing, Strobe, Cycling, Music, Wave and more.

Connecting the LED Strip

Connect your RGB LED strips to the **RGB LED Headers (RGB_LED1, RGB_LED2)** on the motherboard.

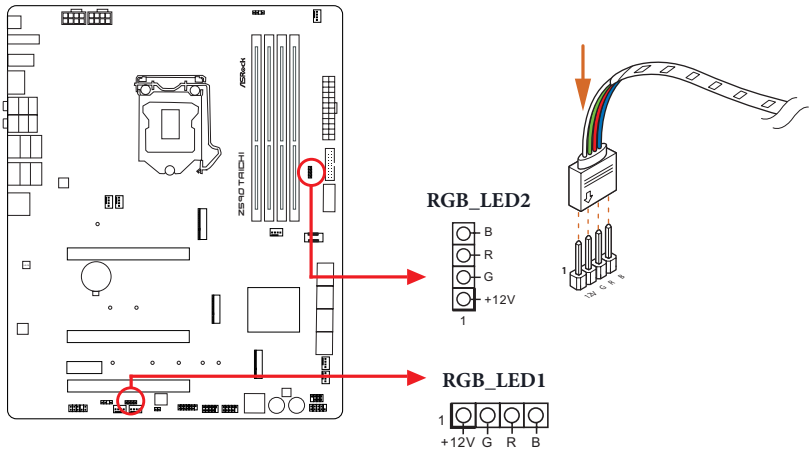

1. *Never install the RGB LED cable in the wrong orientation; otherwise, the cable may be damaged.*
2. *Before installing or removing your RGB LED cable, please power off your system and unplug the power cord from the power supply. Failure to do so may cause damages to motherboard components.*

1. *Please note that the RGB LED strips do not come with the package.*
2. *The RGB LED header supports standard 5050 RGB LED strip (12V/G/R/B), with a maximum power rating of 3A (12V) and length within 2 meters.*

English

Connecting the Addressable RGB LED Strip

Connect your Addressable RGB LED strips to the **Addressable LED Headers (ADDR_LED1, ADDR_LED2)** on the motherboard.

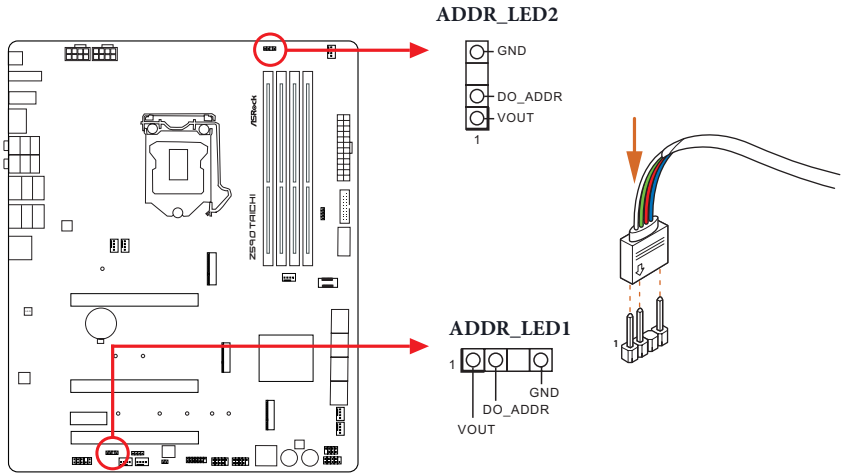

1. *Never install the RGB LED cable in the wrong orientation; otherwise, the cable may be damaged.*
2. *Before installing or removing your RGB LED cable, please power off your system and unplug the power cord from the power supply. Failure to do so may cause damages to motherboard components.*

1. *Please note that the RGB LED strips do not come with the package.*
2. *The RGB LED header supports WS2812B addressable RGB LED strip (5V/Data/GND), with a maximum power rating of 3A (5V) and length within 2 meters.*

English

ASRock Polychrome SYNC Utility

Now you can adjust the RGB LED color through the ASRock Polychrome SYNC Utility. Download this utility from the ASRock Live Update & APP Shop and start coloring your PC style your way!

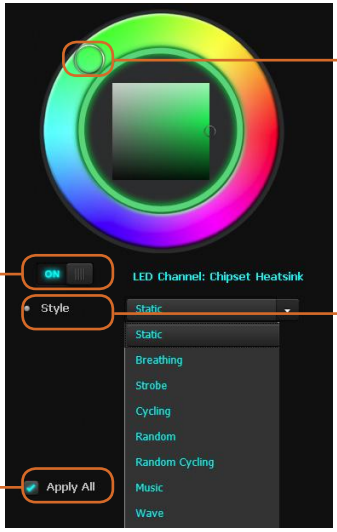

Drag the tab to customize your preference.

Toggle on/off the RGB LED switch

Select a RGB LED light effect from the drop-down menu.

Sync RGB LED effects for all LED regions of the motherboard

Chapter 4 UEFI SETUP UTILITY

4.1 Introduction

This section explains how to use the UEFI SETUP UTILITY to configure your system. You may run the UEFI SETUP UTILITY by pressing <F2> or <Del> right after you power on the computer, otherwise, the Power-On-Self-Test (POST) will continue with its test routines. If you wish to enter the UEFI SETUP UTILITY after POST, restart the system by pressing <Ctl> + <Alt> + <Delete>, or by pressing the reset button on the system chassis. You may also restart by turning the system off and then back on.

Because the UEFI software is constantly being updated, the following UEFI setup screens and descriptions are for reference purpose only, and they may not exactly match what you see on your screen.

4.2 EZ Mode

The EZ Mode screen appears when you enter the BIOS setup program by default. EZ mode is a dashboard which contains multiple readings of the system's current status. You can check the most crucial information of your system, such as CPU speed, DRAM frequency, SATA information, fan speed, etc.

Press <F6> or click the "Advanced Mode" button at the upper right corner of the screen to switch to "Advanced Mode" for more options.

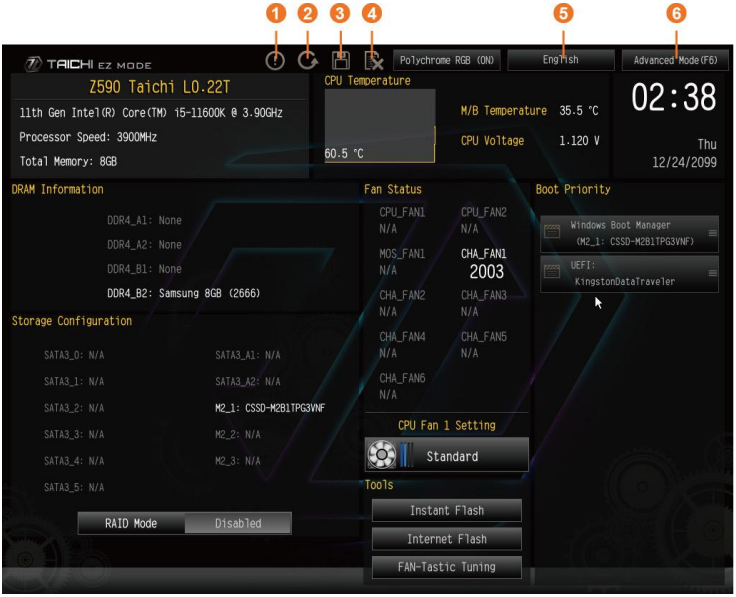

No.	Function
1	Help
2	Load UEFI Defaults
3	Save Changes and Exit
4	Discard Changes
5	Change Language
6	Switch to Advanced Mode

English

4.3 Advanced Mode

The Advanced Mode provides more options to configure the BIOS settings. Refer to the following sections for the detailed configurations.

To access the EZ Mode, press <F6> or click the "EZ Mode" button at the upper right corner of the screen.

4.3.1 UEFI Menu Bar

The top of the screen has a menu bar with the following selections:

Main	For setting system time/date information
OC Tweaker	For overclocking configurations
Advanced	For advanced system configurations
Tool	Useful tools
H/W Monitor	Displays current hardware status
Security	For security settings
Boot	For configuring boot settings and boot priority
Exit	Exit the current screen or the UEFI Setup Utility

4.3.2 Navigation Keys

Use <←> key or <→> key to choose among the selections on the menu bar, and use < ↑ > key or < ↓ > key to move the cursor up or down to select items, then press <Enter> to get into the sub screen. You can also use the mouse to click your required item.

Please check the following table for the descriptions of each navigation key.

Navigation Key(s)	Description
+ / -	To change option for the selected items
<Tab>	Switch to next function
<PGUP>	Go to the previous page
<PGDN>	Go to the next page
<HOME>	Go to the top of the screen
<END>	Go to the bottom of the screen
<F1>	To display the General Help Screen
<F5>	Add / Remove Favorite
<F7>	Discard changes and exit the SETUP UTILITY
<F9>	Load optimal default values for all the settings
<F10>	Save changes and exit the SETUP UTILITY
<F12>	Print screen
<ESC>	Jump to the Exit Screen or exit the current screen

4.4 Main Screen

When you enter the UEFI SETUP UTILITY, the Main screen will appear and display the system overview.

The availability and location of BIOS settings can be different for different models and BIOS versions.

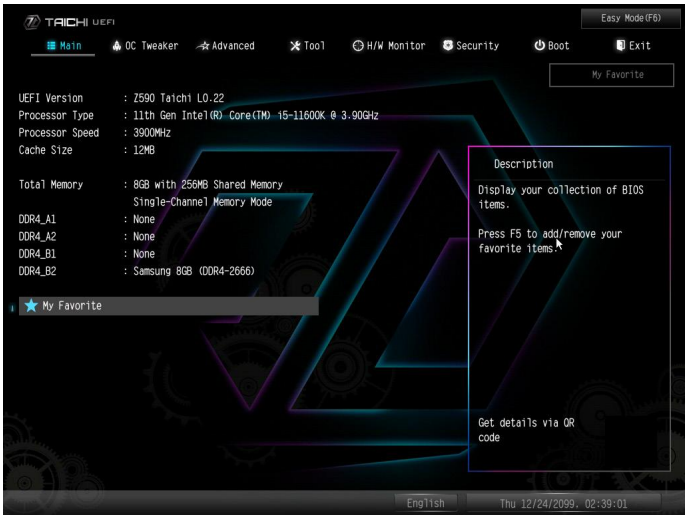

My Favorite

Display your collection of BIOS items. Press F5 to add/remove your favorite items.

4.5 OC Tweaker Screen

In the OC Tweaker screen, you can set up overclocking features.

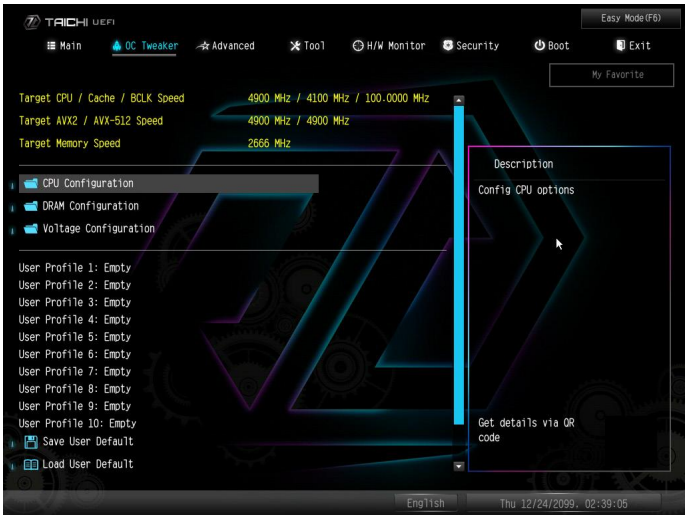

Because the UEFI software is constantly being updated, the following UEFI setup screens and descriptions are for reference purpose only, and they may not exactly match what you see on your screen.

CPU Configuration

CPU Ratio

The CPU speed is determined by the CPU Ratio multiplied with the BCLK. Increasing the CPU Ratio will increase the internal CPU clock speed without affecting the clock speed of other components.

AVX2 Ratio Offset

AVX2 Ratio Offset specifies a negative offset from the CPU Ratio for AVX workloads. AVX is a more stressful workload that lower the AVX ratio to ensure maximum possible ratio for SSE workloads.

AVX-512 Ratio Offset

AVX-512 Ratio Offset specifies a negative offset from the CPU Ratio for AVX-512 workloads. AVX-512 is a more stressful workload that lower the AVX ratio to ensure maximum possible ratio for SSE workloads.

CPU Cache Ratio

The CPU Internal Bus Speed Ratio. The maximum should be the same as the CPU Ratio.

GT Frequency

Configure the frequency of the integrated GPU.

BCLK Frequency

The CPU speed is determined by the CPU Ratio multiplied with the BCLK. Increasing the BCLK will increase the internal CPU clock speed but also affect the clock speed of other components.

CPU PLL Spread Spectrum

Enable Spread Spectrum to reduce electromagnetic interference for passing EMI tests. Disable to achieve higher clock speeds when overclocking.

PCIE/DMI Spread Spectrum

Enable Spread Spectrum to reduce electromagnetic interference for passing EMI tests. Disable to achieve higher clock speeds when overclocking.

BCLK Advanced Setting

Configure BCLK advanced settings.

BCLK Aware Adaptive Voltage

BCLK Aware Adaptive Voltage enable/disable. When enabled, pcode will be aware of the BCLK frequency when calculating the CPU V/F curves. This is ideal for BCLK OC to avoid high voltage overrides.

Boot Performance Mode

Select the performance state that the BIOS will set before OS handoff.

Ring to Core Ratio Offset

Disable Ring to Core Ratio Offset so the ring and core can run at the same frequency.

PVD Ratio Threshold

Select PVD Ratio Threshold Value from Range 1 to 40.

Intel SpeedStep Technology

Intel SpeedStep technology allows processors to switch between multiple frequencies and voltage points for better power saving and heat dissipation.

Intel Turbo Boost Technology

Intel Turbo Boost Technology enables the processor to run above its base operating frequency when the operating system requests the highest performance state.

Intel Speed Shift Technology

Enable/Disable Intel Speed Shift Technology support. Enabling will expose the CPPC v2 interface to allow for hardware controlled P-sates.

Intel Turbo Boost Max Technology 3.0

Intel Turbo Boost Technology enables the processor to run above its base operating frequency when the operating system requests the highest performance state.

Intel Thermal Velocity Boost Voltage Optimizations

This service controls thermal based voltage optimizations for processors that implment the Intel Thermal Velocity Boost (TVB) feature.

CPU Tj Max

Set CPU Tj Max to adjust TCC Target Temperature. Default setting is 105°C.

Dual Tau Boost

Enable Dual Tau Boost feature. This is only applicable for CMLS 35W/65W/125W skus. This item is only supported with processors with Config TDP support.

Long Duration Power Limit

Configure Package Power Limit 1 in watts. When the limit is exceeded, the CPU ratio will be lowered after a period of time. A lower limit can protect the CPU and save power, while a higher limit may improve performance.

Long Duration Maintained

Configure the period of time until the CPU ratio is lowered when the Long Duration Power Limit is exceeded.

Short Duration Power Limit

Configure Package Power Limit 2 in watts. When the limit is exceeded, the CPU ratio will be lowered immediately. A lower limit can protect the CPU and save power, while a higher limit may improve performance.

Unlimited Current Limit

To unlock voltage regulator current limit completely, you can set this option to Enabled.

CPU Core Current Limit

Configure the current limit of the CPU core. A lower limit can protect the CPU and save power, while a higher limit may improve performance.

System Agent Current Limit

Configure the current limit of the system agent. A lower limit can protect the CPU and save power, while a higher limit may improve performance.

GT Current Limit

Configure the current limit of the GT slice. A lower limit can protect the CPU and save power, while a higher limit may improve performance.

DRAM Configuration

Memory Information

Allows users to browse the serial presence detect (SPD) and Intel extreme memory profile (XMP) for DDR4 modules.

DRAM Timing Configuration

Load XMP Setting

Load XMP settings to overclock the memory and perform beyond standard specifications.

DRAM Reference Clock

Select Auto for optimized settings.

DRAM Frequency

If [Auto] is selected, the motherboard will detect the memory module(s) inserted and assign the appropriate frequency automatically.

DRAM Gear Mode

Gear2 mode doubled the ratio in memory controller, and it is good for high frequency.

System Agent Geyserville

Configure System Agent Geyserville (SA GV) settings.

BCLK Frequency

Configure the BCLK Frequency.

Primary Timing

CAS# Latency (tCL)

The time between sending a column address to the memory and the beginning of the data in response.

RAS# to CAS# Delay and Row Precharge (tRCDtRP)

RAS# to CAS# Delay : The number of clock cycles required between the opening of a row of memory and accessing columns within it.
Row Precharge: The number of clock cycles required between the issuing of the precharge command and opening the next row.

RAS# Active Time (tRAS)

The number of clock cycles required between a bank active command and issuing the precharge command.

Command Rate (CR)

The delay between when a memory chip is selected and when the first active command can be issued.

Secondary Timing

Write Recovery Time (tWR)

The amount of delay that must elapse after the completion of a valid write operation, before an active bank can be precharged.

Refresh Cycle Time (tRFC)

The number of clocks from a Refresh command until the first Activate command to the same rank.

RAS to RAS Delay (tRRD_L)

The number of clocks between two rows activated in different banks of the same rank.

RAS to RAS Delay (tRRD_S)

The number of clocks between two rows activated in different banks of the same rank.

Write to Read Delay (tWTR_L)

The number of clocks between the last valid write operation and the next read command to the same internal bank.

Write to Read Delay (tWTR_S)

The number of clocks between the last valid write operation and the next read command to the same internal bank.

Read to Precharge (tRTP)

The number of clocks that are inserted between a read command to a row pre-charge command to the same rank.

Four Activate Window (tFAW)

The time window in which four activates are allowed the same rank.

CAS Write Latency (tCWL)

Configure CAS Write Latency.

Third Timing

tREFI

Configure refresh cycles at an average periodic interval.

tCKE

Configure the period of time the DDR4 initiates a minimum of one refresh command internally once it enters Self-Refresh mode.

Turn Around Timing

Turn Around Timing Optimization

tRDRD_sg

Configure between module read to read delay.

tRDRD_dg

Configure between module read to read delay.

tRDRD_dr

Configure between module read to read delay.

tRDRD_dd

Configure between module read to read delay.

tRDWR_sg

Configure between module read to write delay.

tRDWR_dg

Configure between module read to write delay.

tRDWR_dr

Configure between module read to write delay.

tRDWR_dd

Configure between module read to write delay.

tWRRD_sg

Configure between module write to read delay.

tWRRD_dg

Configure between module write to read delay.

tWRRD_dr

Configure between module write to read delay.

tWRRD_dd

Configure between module write to read delay.

tWRWR_sg

Configure between module write to write delay.

tWRWR_dg

Configure between module write to write delay.

tWRWR_dr

Configure between module write to write delay.

tWRWR_dd

Configure between module write to write delay.

Round Trip Timing

Round Trip Timing Optimization

Auto is enabled in general case.

Rx FiF0 Delay Offset

Configure Rx FIF0 Delay Offset.

Initial RTL (A1 Rank1)

Configure round trip latency initial value.

Initial RTL (A1 Rank2)

Configure round trip latency initial value.

Initial RTL (A2 Rank1)

Configure round trip latency initial value.

Initial RTL (A2 Rank2)

Configure round trip latency initial value.

Initial RTL (B1 Rank1)

Configure round trip latency initial value.

Initial RTL (B1 Rank2)

Configure round trip latency initial value.

Initial RTL (B2 Rank1)

Configure round trip latency initial value.

Initial RTL (B2 Rank2)

Configure round trip latency initial value.

RTL (A1 Rank1)

Configure round trip latency.

RTL (A1 Rank2)

Configure round trip latency.

RTL (A2 Rank1)

Configure round trip latency.

RTL (A2 Rank2)

Configure round trip latency.

RTL (B1 Rank1)

Configure round trip latency.

RTL (B1 Rank2)

Configure round trip latency.

RTL (B2 Rank1)

Configure round trip latency.

RTL (B2 Rank2)

Configure round trip latency.

ODT Setting

ODT WR (A1)

Configure the memory on die termination resistors' WR for channel A1.

ODT WR (A2)

Configure the memory on die termination resistors' WR for channel A2.

ODT WR (B1)

Configure the memory on die termination resistors' WR for channel B1.

ODT WR (B2)

Configure the memory on die termination resistors' WR for channel B2.

ODT NOM (A1)

Use this to change ODT (CH A1) Auto/Manual settings. The default is [Auto].

ODT NOM (A2)

Use this to change ODT (CH A2) Auto/Manual settings. The default is [Auto].

ODT NOM (B1)

Use this to change ODT (CH B1) Auto/Manual settings. The default is [Auto].

ODT NOM (B2)

Use this to change ODT (CH B2) Auto/Manual settings. The default is [Auto].

ODT PARK (A1)

Configure the memory on die termination resistors' PARK for channel A1.

ODT PARK (A2)

Configure the memory on die termination resistors' PARK for channel A2.

ODT PARK (B1)

Configure the memory on die termination resistors' PARK for channel B1.

ODT PARK (B2)

Configure the memory on die termination resistors' PARK for channel B2.

Advanced Setting

ASRock Timing Optimization

Configure the fast path through the MRC.

ASRock Second Timing Optimization

Configure the second fast path through the MRC.

Memory Training Mode

Configure the Training Memory Mode.

Realtime Memory Timing

Configure the realtime memory timings.

[Enabled] The system will allow performing realtime memory timing changes after MRC_DONE.

Reset for MRC Failed

Reset system after MRC training is failed.

Train on Warm Boot

When enabled, memory training will be executed when warm boot.

MRC Fast Boot

Enable Memory Fast Boot to skip DRAM memory training for booting faster.

Voltage Configuration

Voltage Mode

[OC]: Larger range voltage for overclocking.

[STABLE]: Smaller range voltage for stable system.

CPU Core/Cache Voltage

Input voltage for the processor by the external voltage regulator.

Core/Cache V/F Curve

Configure CPU Core/Cache Voltage/Frequency Curve.

CPU Core/Cache Load-Line Calibration

CPU Core/Cache Load-Line Calibration helps prevent CPU Core/Cache voltage droop when the system is under heavy loading.

CPU GT Voltage

Configure the voltage for the integrated GPU.

CPU GT Load-Line Calibration

GT Load-Line Calibration helps prevent integrated GPU voltage droop when the system is under heavy load.

VCCSA Voltage

Configure the voltage for the VCCSA.

VCCSA Load-Line Calibration

VCCSA Load-Line Calibration helps prevent integrated VCCSA voltage droop when the system is under heavy load.

DRAM Voltage

Use this to configure DRAM Voltage. The default value is [Auto].

VTTDDR Voltage

Use this to configure VTTDDR Voltage. The default value is [Auto].

VCCIO Voltage

Configure the voltage for the VCCIO.

VCC PLL Voltage

Configure the voltage for the VCC PLL.

VCCIO 1 2 Voltage

Configure the voltage for the VCCIO 1 2.

DRAM Activating Power Supply

Configure the voltage for the DRAM Activating Power Supply.

PCH Voltage

Configure the voltage for the PCH.

CPU Standby 1 Voltage

Configure the voltage for the CPU Standby 1.

CPU Standby 2 Voltage

Configure the voltage for the CPU Standby 2.

CPU Standby 3 Voltage

Configure the voltage for the CPU Standby 3.

AVX Configuration

AVX2 Voltage Guardband Scale Factor

AVX2 Voltage Guardband Scale Factor controls the voltage guardband applied to AVX2 workloads. A value > 1.00 will increase the voltage guardband, and < 1.00 will decrease the voltage guardband.

AVX-512 Voltage Guardband Scale Factor

AVX-512 Voltage Guardband Scale Factor controls the voltage guardband applied to AVX-512 workloads. A value > 1.00 will increase the voltage guardband, and < 1.00 will decrease the voltage guardband.

Save User Default

Type a profile name and press enter to save your settings as user default.

Load User Default

Load previously saved user defaults.

Save User UEFI Setup Profile to Disk

It helps you to save current UEFI settings as an user profile to disk.

Load User UEFI Setup Profile from Disk

You can load previous saved profile from the disk.

4.6 Advanced Screen

In this section, you may set the configurations for the following items: CPU Configuration, Chipset Configuration, Storage Configuration, NVMe Configuration, Intel(R) Thunderbolt, ACPI Configuration, USB Configuration and Trusted Computing.

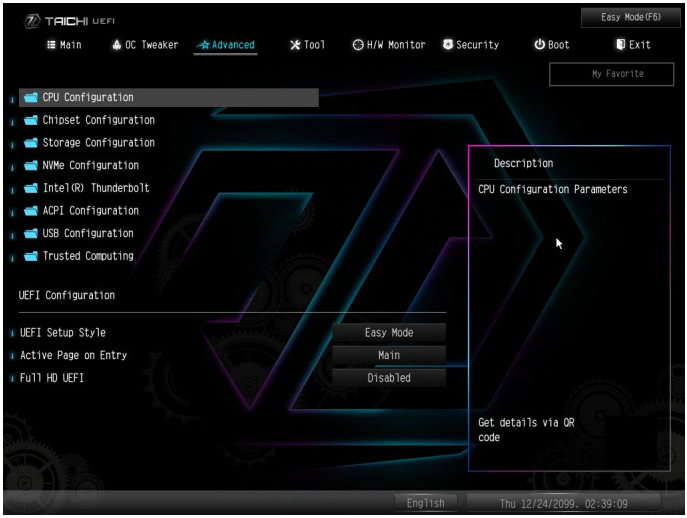

Setting wrong values in this section may cause the system to malfunction.

UEFI Configuration

UEFI Setup Style

Select the default mode when entering the UEFI setup utility.

Active Page on Entry

Select the default page when entering the UEFI setup utility.

Full HD UEFI

When [Auto] is selected, the resolution will be set to 1920 x 1080 if the monitor supports Full HD resolution. If the monitor does not support Full HD resolution, then the resolution will be set to 1024 x 768. When [Disable] is selected, the resolution will be set to 1024 x 768 directly.

4.6.1 CPU Configuration

Intel Hyper Threading Technology

Intel Hyper Threading Technology allows multiple threads to run on each core, so that the overall performance on threaded software is improved.

Pre-Core Hyper Threading

The Pre-Core Hyper Threading feature allows you to disable Hyper Threading on specific cores.

Active Processor Cores

Select the number of cores to enable in each processor package.

CPU C States Support

Enable CPU C States Support for power saving. It is recommended to keep C6 and C7 all enabled for better power saving.

Enhanced Halt State (C1E)

Enable Enhanced Halt State (C1E) for lower power consumption.

CPU C6 State Support

Enable C6 deep sleep state for lower power consumption.

CPU C7 State Support

Enable C7 deep sleep state for lower power consumption.

Package C State Support

Enable CPU, PCIe, Memory, Graphics C State Support for power saving.

CFG Lock

This item allows you to disable or enable the CFG Lock.

C6DRAM

Enable/Disable moving of DRAM contents to PRM memory when CPU is in C6 state.

CPU Thermal Throttling

Enable CPU internal thermal control mechanisms to keep the CPU from overheating.

Intel AVX/AVX2

Enable/Disable the Intel AVX and AVX2 Instructions. This is applicable for Big Core only.

Intel AVX-512

Enable/Disable the Intel AVX-512 (a.k.a. AVX3) Instructions. This is applicable for Big Core only.

Intel Virtualization Technology

Intel Virtualization Technology allows a platform to run multiple operating systems and applications in independent partitions, so that one computer system can function as multiple virtual systems.

Hardware Prefetcher

Automatically prefetch data and code for the processor. Enable for better performance.

Adjacent Cache Line Prefetch

Automatically prefetch the subsequent cache line while retrieving the currently requested cache line. Enable for better performance.

4.6.2 Chipset Configuration

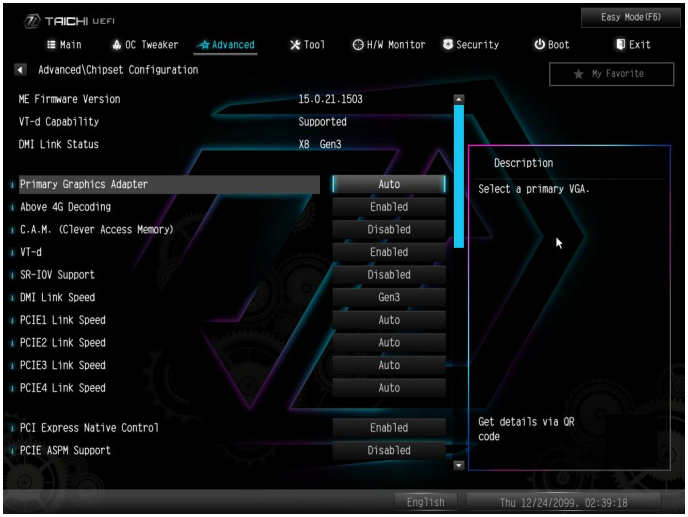

Primary Graphics Adapter

Select a primary VGA.

Above 4G Decoding

Enable or disable 64bit capable Devices to be decoded in Above 4G Address Space (only if the system supports 64 bit PCI decoding).

C.A.M (Clever Access Memory)

If system has Resizable BAR capable PCIe Devices, use this option to enable or disable Resizable BAR support (only of the system supports 64-bit PCI decoding).

VT-d

Intel® Virtualization Technology for Directed I/O helps your virtual machine monitor better utilize hardware by improving application compatibility and reliability, and providing additional levels of manageability, security, isolation, and I/O performance.

SR-IOV Support

If system has SR-IOV capable PCIe Devices, this option Enables or Disables Single Root IO Virtualization Support.

DMI Link Speed

Configure DMI Slot Link Speed. Auto mode is optimizing for overclocking.

PCIE1 Link Speed

Select the link speed for PCIE1.

PCIE2 Link Speed

Select the link speed for PCIE2.

PCIE3 Link Speed

Select the link speed for PCIE3.

PCIE4 Link Speed

Select the link speed for PCIE4.

PCI Express Native Control

Select Enable for enhanced PCI Express power saving in OS.

PCIE ASPM Support

This option enables/disables the ASPM support for all CPU downstream devices.

PCH PCIE ASPM Support

This option enables/disables the ASPM support for all PCH PCIE devices.

DMI ASPM Support

This option enables/disables the control of ASPM on CPU side of the DMI Link.

PCH DMI ASPM Support

This option enables/disables the ASPM support for all PCH DMI devices.

Share Memory

Configure the size of memory that is allocated to the integrated graphics processor when the system boots up.

IGPU Multi-Monitor

Select disable to disable the integrated graphics when an external graphics card is installed. Select enable to keep the integrated graphics enabled at all times.

Inte(R) Ethernet Connection I219-V

Enable or disable the onboard network interface controller (Intel® I219V).

Killer E3100G

Enable or disable the onboard network interface controller (Killer E3100G).

Onboard HD Audio

Enable/disable onboard HD audio. Set to Auto to enable onboard HD audio and automatically disable it when a sound card is installed.

Front Panel

Enable/disable front panel HD audio.

Onboard HDMI HD Audio

Enable audio for the onboard digital outputs.

Onboard WAN Device

Use this item to enable or disable the onboard WAN device.

WAN Radio

Enable/disable the WiFi module's connectivity.

Bluetooth

Enable/disable the Bluetooth connectivity.

Deep Sleep

Configure deep sleep mode for power saving when the computer is shut down.

Restore on AC/Power Loss

Select the power state after a power failure. If [Power Off] is selected, the power will remain off when the power recovers. If [Power On] is selected, the system will start to boot up when the power recovers.

Turn On Onboard LED in S5

Turn on Onboard LED in the ACPI S5 state.

Restore Onboard LED Default

Restore Onboard LED default value.

RGB LED

This option enables/disables the RGB LED.

Onboard Button LED

Enable/disable the onboard button LED.

Onboard Debug Port LED

Enable/disable the onboard Dr. Debug LED.

4.6.3 Storage Configuration

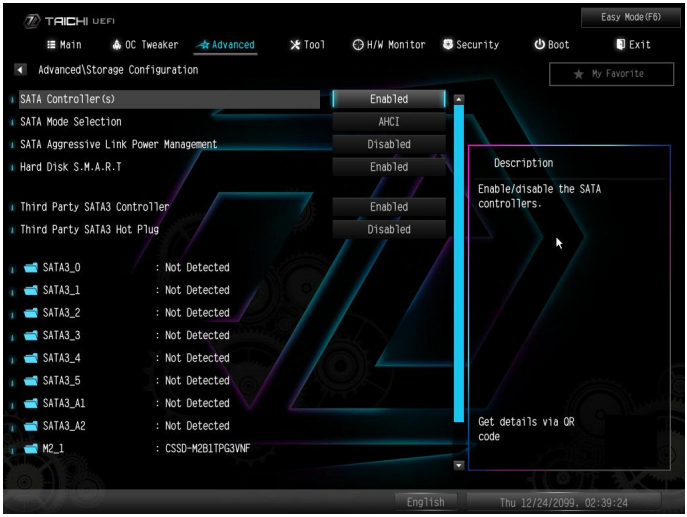

SATA Controller(s)

Enable/disable the SATA controllers.

SATA Mode Selection

AHCI: Supports new features that improve performance.

RAID: Combine multiple disk drives into a logical unit.

SATA Aggressive Link Power Management

SATA Aggressive Link Power Management allows SATA devices to enter a low power state during periods of inactivity to save power. It is only supported by AHCI mode.

Hard Disk S.M.A.R.T.

S.M.A.R.T stands for Self-Monitoring, Analysis, and Reporting Technology. It is a monitoring system for computer hard disk drives to detect and report on various indicators of reliability.

Third Party SATA 3 Controller

Enable or disable the third party SATA3 controller.

Third Party SATA3 Hot Plug

Enable or disable the third party SATA3 controller.

4.6.4 NVMe Configuration

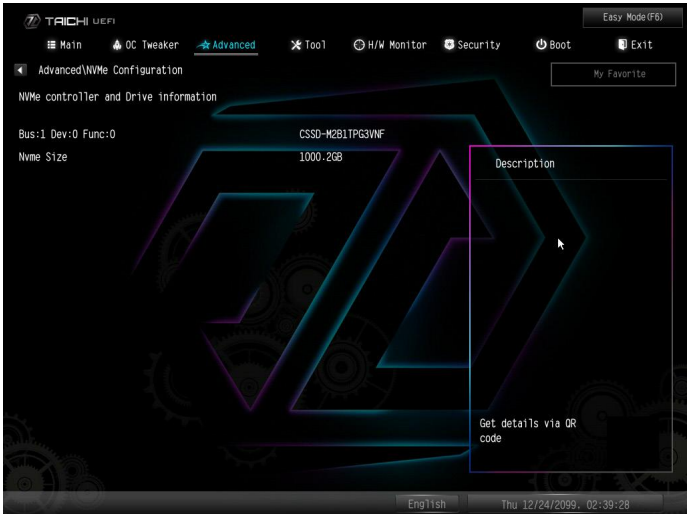

The NVMe Configuration displays the NVMe controller and Drive information.

4.6.5 Intel(R) Thunderbolt

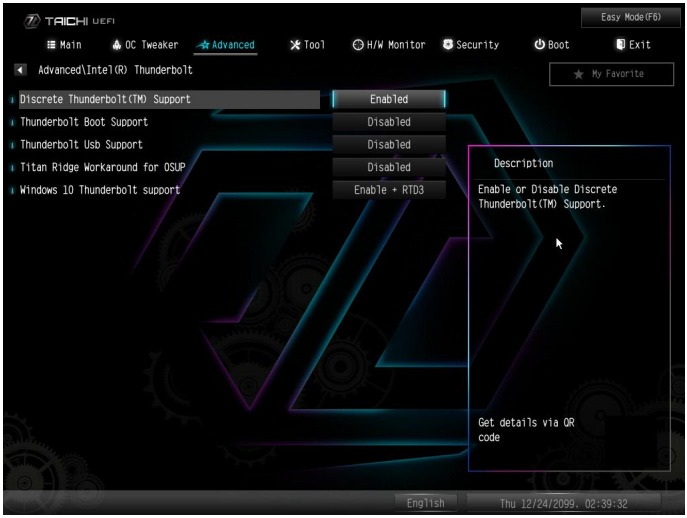

Discrete Thunderbolt(TM) Support

Enable or disable the Discrete Thunderbolt(TM) Support.

Thunderbolt Boot Support

Enabled to allow booting from Bootable devices which are present behind Thunderbolt.

Thunderbolt Usb Support

Enabled to allow booting from Usb devices which are present behind Thunderbolt.

Titan Ridge Workaround for OSUP

Enable or disable Titan Ridge Workaround for OSUP.

Windows 10 Thunderbolt support

Specify Windows 10 Thunderbolt support level.

Disabled: No OS native support.

Enabled: OS Native support only. no RTD3.

4.6.6 ACPI Configuration

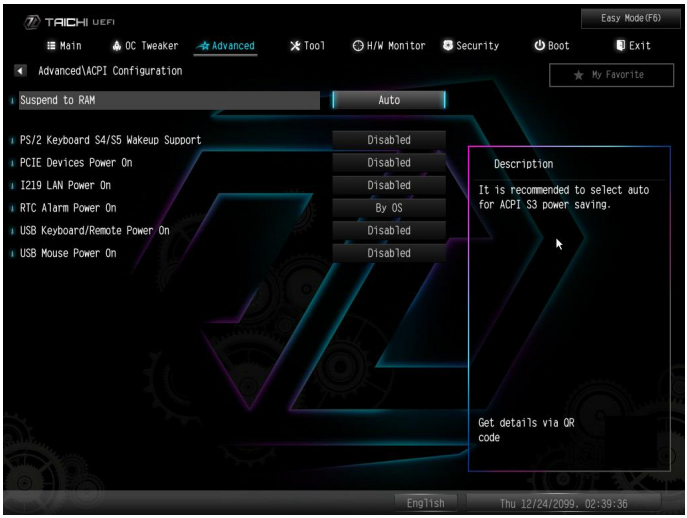

Suspend to RAM

Select disable for ACPI suspend type S1. It is recommended to select auto for ACPI S3 power saving.

PS/2 Keyboard S4/S5 Wakeup Support

Allow the system to be waked up by a PS/2 Keyboard in S4/S5.

PCIE Devices Power On

Allow the system to be waked up by a PCIE device and enable wake on LAN.

I219 LAN Power On

Allow the system to be waked up by the Onboard Intel LAN.

RTC Alarm Power On

Allow the system to be waked up by the real time clock alarm. Set it to By OS to let it be handled by your operating system.

USB Keyboard/Remote Power On

Allow the system to be waked up by an USB keyboard or remote controller.

USB Mouse Power On

Allow the system to be waked up by an USB mouse.

4.6.7 USB Configuration

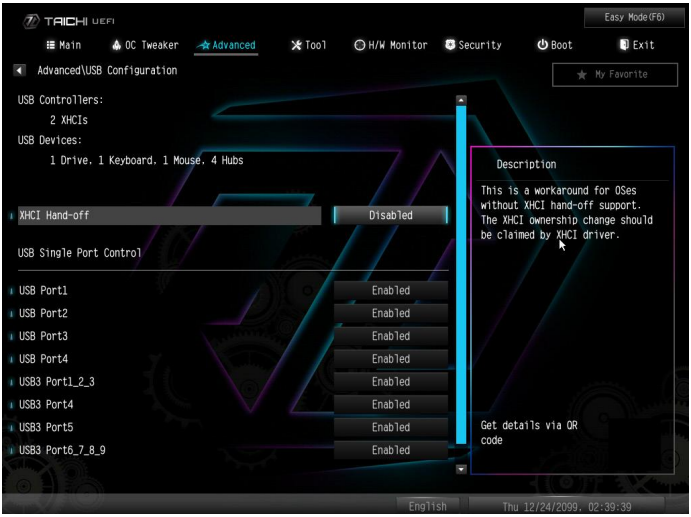

XHCI Hand-off

This is a workaround for OSes without XHCI hand-off support. The XHCI ownership change should be claimed by XHCI driver.

4.6.8 Trusted Computing

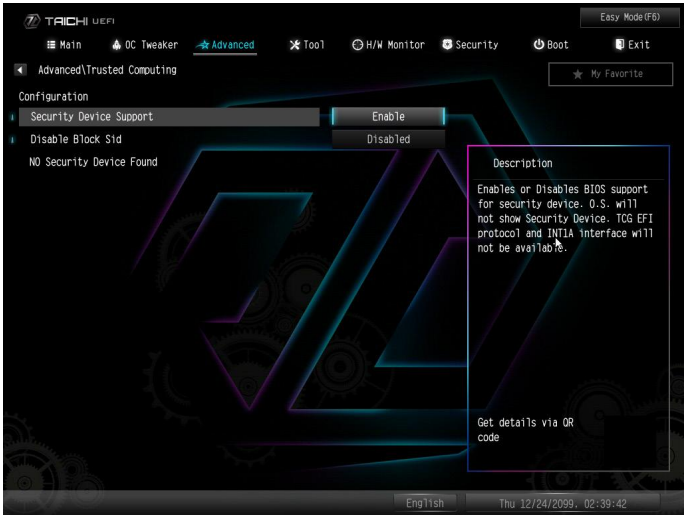

Security Device Support

Enable or disable BIOS support for security device.

Disable Block Sid

Override to allow SID authentication in TCG Storage device.

4.7 Tools

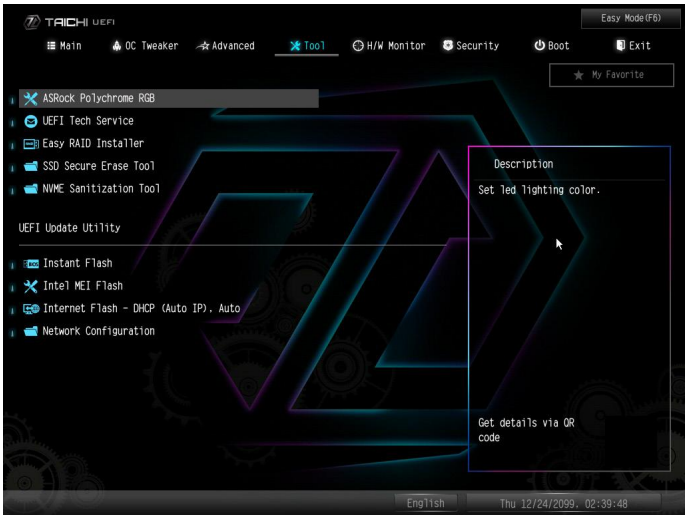

ASRock Polychrome RGB

Select LED lighting color.

UEFI Tech Service

Contact ASRock Tech Service if you are having trouble with your PC. Please setup network configuration before using UEFI Tech Service.

Easy RAID Installer

Easy RAID Installer helps you to copy the RAID driver from the support CD to your USB storage device. After copying the drivers please change the SATA mode to RAID, then you can start installing the operating system in RAID mode.

SSD Secure Erase Tool

All the SSD's listed that supports Secure Erase function.

NVME Sanitization Tool

After you Sanitize SSD, all user data will be permanently destroyed on the SSD and cannot be recovered.

Instant Flash

Save UEFI files in your USB storage device and run Instant Flash to update your UEFI.

Intel MEI Flash

Starts BIOS recovery flash.

Internet Flash - DHCP (Auto IP), Auto

ASRock Internet Flash downloads and updates the latest UEFI firmware version from our servers for you. Please setup network configuration before using Internet Flash.

*For BIOS backup and recovery purpose, it is recommended to plug in your USB pen drive before using this function.

Network Configuration

Use this to configure internet connection settings for Internet Flash.

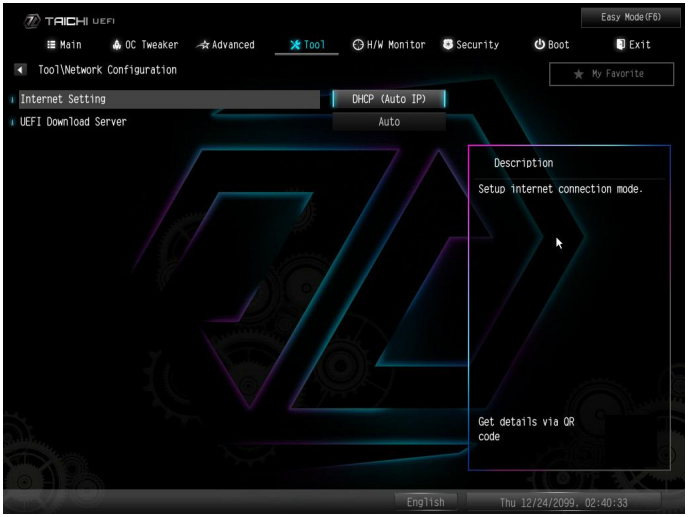

Internet Setting

Enable or disable sound effects in the setup utility.

UEFI Download Server

Select a server to download the UEFI firmware.

4.8 Hardware Health Event Monitoring Screen

This section allows you to monitor the status of the hardware on your system, including the parameters of the CPU temperature, motherboard temperature, fan speed and voltage.

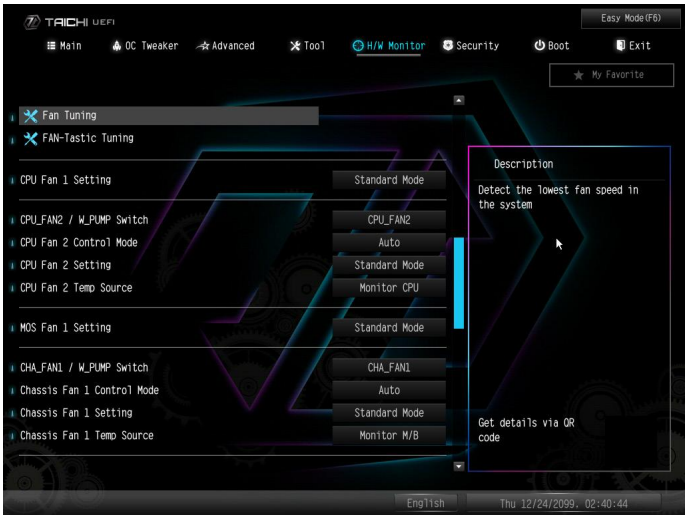

Fan Tuning

Measure Fan Min Duty Cycle.

Fan-Tastic Tuning

Select a fan mode for CPU Fan, or choose Customize to set 5 CPU temperatures and assign a respective fan speed for each temperature.

CPU Fan 1 Setting

Select a fan mode for CPU Fan 1, or choose Customize to set 5 CPU temperatures and assign a respective fan speed for each temperature.

CPU_FAN2 / W_PUMP Switch

Switch CPU_FAN2 / W_PUMP header function.

CPU Fan 2 Control Mode

Select DC/PWM mode for CPU Fan 2.

CPU Fan 2 Setting

Select a fan mode for CPU Fan, or choose Customize to set 5 CPU temperatures and assign a respective fan speed for each temperature.

CPU Fan 2 Temp Source

Select a fan temperature source for CPU Fan 2.

MOS Fan 1 Setting

Select a fan mode for MOS Fan 1, or choose Customize to set 5 CPU temperatures and assign a respective fan speed for each temperature.

CHA_FAN1 / W_PUMP Switch

Select Chassis Fan 1 or Water Pump mode.

Chassis Fan 1 Control Mode

Select PWM mode or DC mode for Chassis Fan 1.

Chassis Fan 1 Setting

Select a fan mode for Chassis Fan 1, or choose Customize to set 5 CPU temperatures and assign a respective fan speed for each temperature.

Chassis Fan 1 Temp Source

Select a fan temperature source for Chassis Fan 1.

CHA_FAN2 / W_Pump Switch

Select Chassis Fan 2 or Water Pump mode.

Chassis Fan 2 Control Mode

Select PWM mode or DC mode for Chassis Fan 2.

Chassis Fan 2 Setting

Select a fan mode for Chassis Fan 2, or choose Customize to set 5 CPU temperatures and assign a respective fan speed for each temperature.

Chassis Fan 2 Temp Source

Select a fan temperature source for Chassis Fan 2.

CHA_FAN3 / W_PUMP Switch

Select Chassis Fan 3 or Water Pump mode.

Chassis Fan 3 Control Mode

Select PWM mode or DC mode for Chassis Fan 3.

Chassis Fan 3 Setting

Select a fan mode for Chassis Fan 3, or choose Customize to set 5 CPU temperatures and assign a respective fan speed for each temperature.

Chassis Fan 3 Temp Source

Select a fan temperature source for Chassis Fan 3.

CHA_FAN4 / W_PUMP Switch

Select Chassis Fan 4 or Water Pump mode.

Chassis Fan 4 Control Mode

Select PWM mode or DC mode for Chassis Fan 4.

Chassis Fan 4 Setting

Select a fan mode for Chassis Fan 4, or choose Customize to set 5 CPU temperatures and assign a respective fan speed for each temperature.

Chassis Fan 4 Temp Source

Select a fan temperature source for Chassis Fan 4.

CHA_FAN5 / W_PUMP Switch

Select Chassis Fan 5 or Water Pump mode.

Chassis Fan 5 Control Mode

Select PWM mode or DC mode for Chassis Fan 5.

Chassis Fan 5 Setting

Select a fan mode for Chassis Fan 5, or choose Customize to set 5 CPU temperatures and assign a respective fan speed for each temperature.

Chassis Fan 5 Temp Source

Select a fan temperature source for Chassis Fan 5.

CHA_FAN6 / W_PUMP Switch

Select Chassis Fan 6 or Water Pump mode.

Chassis Fan 6 Control Mode

Select PWM mode or DC mode for Chassis Fan 6.

Chassis Fan 6 Setting

Select a fan mode for Chassis Fan 6, or choose Customize to set 5 CPU temperatures and assign a respective fan speed for each temperature.

Chassis Fan 6 Temp Source

Select a fan temperature source for Chassis Fan 6.

4.9 Security Screen

In this section you may set or change the supervisor/user password for the system. You may also clear the user password.

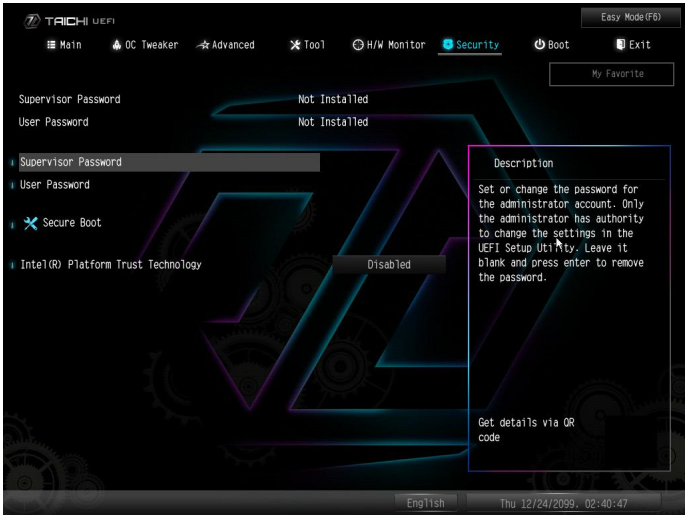

Supervisor Password

Set or change the password for the administrator account. Only the administrator has authority to change the settings in the UEFI Setup Utility. Leave it blank and press enter to remove the password.

User Password

Set or change the password for the user account. Users are unable to change the settings in the UEFI Setup Utility. Leave it blank and press enter to remove the password.

Secure Boot

Use this item to enable or disable support for Secure Boot.

Intel(R) Platform Trust Technology

Enable/disable Intel PTT in ME. Disable this option to use discrete TPM Module.

4.10 Boot Screen

This section displays the available devices on your system for you to configure the boot settings and the boot priority.

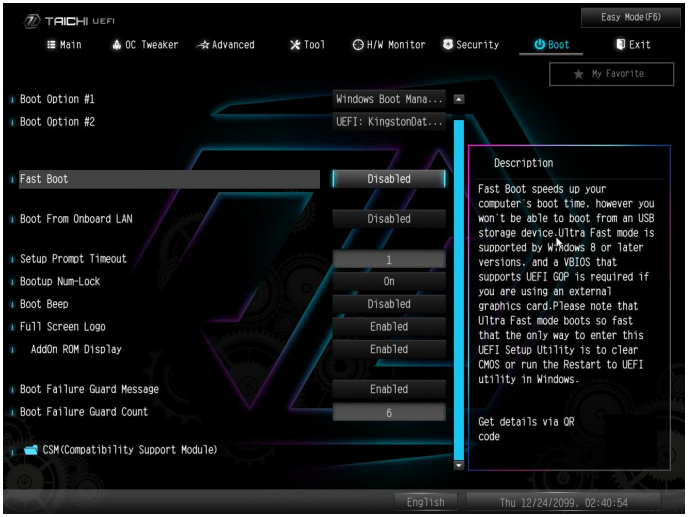

Fast Boot

Fast Boot minimizes your computer's boot time. In fast mode you may not boot from an USB storage device. The VBIOS must support UEFI GOP if you are using an external graphics card. Please notice that Ultra Fast mode will boot so fast that the only way to enter this UEFI Setup Utility is to Clear CMOS or run the Restart to UEFI utility in Windows.

Boot From Onboard LAN

Allow the system to be waked up by the onboard LAN.

Setup Prompt Timeout

Configure the number of seconds to wait for the setup hot key.

Bootup Num-Lock

Select whether Num Lock should be turned on or off when the system boots up.

Boot Beep

Select whether the Boot Beep should be turned on or off when the system boots up. Please note that a buzzer is needed.

Full Screen Logo

Enable to display the boot logo or disable to show normal POST messages.

AddOn ROM Display

Enable AddOn ROM Display to see the AddOn ROM messages or configure the AddOn ROM if you've enabled Full Screen Logo. Disable for faster boot speed.

Boot Failure Guard Message

If the computer fails to boot for a number of times the system automatically restores the default settings.

Boot Failure Guard Count

Configure the number of attempts to boot until the system automatically restores the default settings.

CSM (Compatibility Support Module)

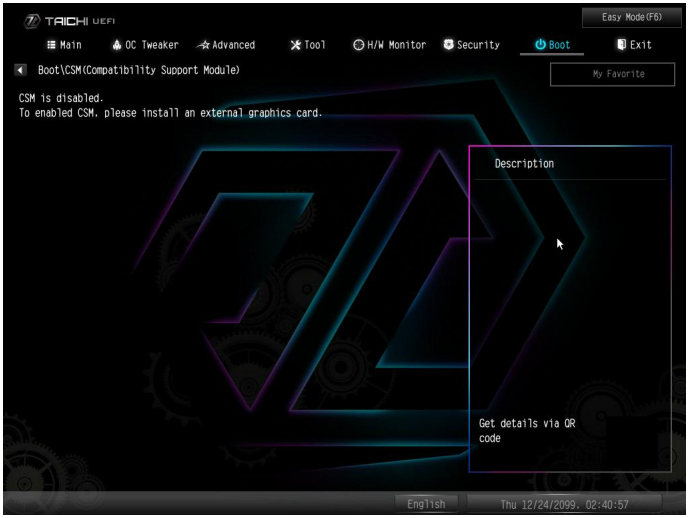

CSM

Enable to launch the Compatibility Support Module. Please do not disable unless you're running a WHCK test.

Launch PXE OpROM Policy

Select UEFI only to run those that support UEFI option ROM only. Select Legacy only to run those that support legacy option ROM only. Select Do not launch to not execute both legacy and UEFI option ROM.

Launch Storage OpROM Policy

Select UEFI only to run those that support UEFI option ROM only. Select Legacy only to run those that support legacy option ROM only. Select Do not launch to not execute both legacy and UEFI option ROM.

Other PCI Device ROM Priority

For PCI devices other than Network. Mass storage or Video defines which OpROM to launch.

4.11 Exit Screen

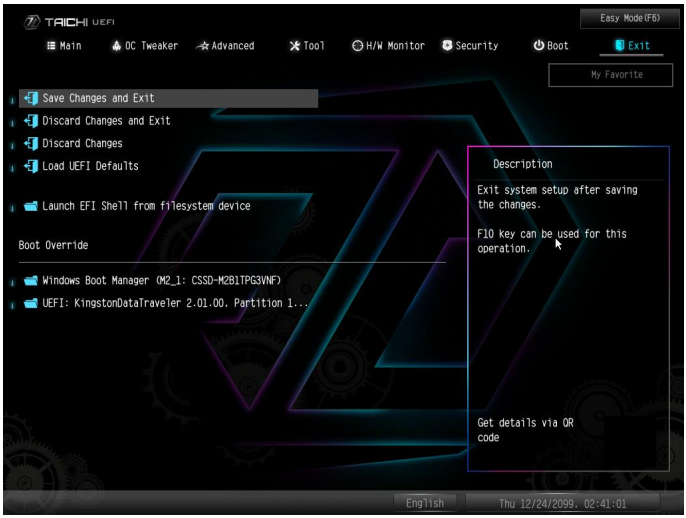

Save Changes and Exit

When you select this option the following message, "Save configuration changes and exit setup?" will pop out. Select [OK] to save changes and exit the UEFI SETUP UTILITY.

Discard Changes and Exit

When you select this option the following message, "Discard changes and exit setup?" will pop out. Select [OK] to exit the UEFI SETUP UTILITY without saving any changes.

Discard Changes

When you select this option the following message, "Discard changes?" will pop out. Select [OK] to discard all changes.

Load UEFI Defaults

Load UEFI default values for all options. The F9 key can be used for this operation.

Launch EFI Shell from filesystem device

Copy shellx64.efi to the root directory to launch EFI Shell.

Contact Information

If you need to contact ASRock or want to know more about ASRock, you're welcome to visit ASRock's website at http://www.asrock.com; or you may contact your dealer for further information. For technical questions, please submit a support request form at http://www.asrock.com/support/tsd.asp

ASRock Incorporation

2F., No.37, Sec. 2, Jhongyang S. Rd., Beitou District,

Taipei City 112, Taiwan (R.O.C.)

ASRock EUROPE B.V.

Bijsterhuizen 11-11

6546 AR Nijmegen

The Netherlands

Phone: +31-24-345-44-33

Fax: +31-24-345-44-38

ASRock America, Inc.

13848 Magnolia Ave, Chino, CA91710

U.S.A.

Phone: +1-909-590-8308

Fax: +1-909-590-1026

DECLARATION OF CONFORMITY

Per FCC Part 2 Section 2.1077(a)

Responsible Party Name: ASRock Incorporation

Address: 13848 Magnolia Ave, Chino, CA91710

Phone/Fax No: +1-909-590-8308/+1-909-590-1026

hereby declares that the product

Product Name : Motherboard

Model Number : Z590 Taichi

Conforms to the following specifications:

☒ FCC Part 15, Subpart B, Unintentional Radiators

Supplementary Information:

This device complies with part 15 of the FCC Rules. Operation is subject to the following two conditions: (1) This device may not cause harmful interference, and (2) this device must accept any interference received, including interference that may cause undesired operation.

Representative Person's Name: **James**

Signature :

Date : **May 12, 2017**

EU Declaration of Conformity

For the following equipment:

Motherboard

(Product Name)

Z590 Taichi / ASRock

(Model Designation / Trade Name)

ASRock Incorporation

(Manufacturer Name)

2F., No.37, Sec. 2, Jhongyang S. Rd., Beitou District, Taipei City 112, Taiwan (R.O.C.)

(Manufacturer Address)

☒ **EMC —Directive 2014/30/EU (from April 20th, 2016)**

- ☐ EN 55022:2010/AC:2011 Class B
- ☒ EN 55024:2010/A1:2015
- ☒ EN 55032:2012+AC:2013 Class B
- ☒ EN 61000-3-3:2013
- ☒ EN 61000-3-2:2014

☒ **RED—Directive 2014/53/EU**

- ☐ EN 300 328 V2.1.1
- ☒ EN 301 489-17 V3.1.1
- ☐ EN 301 893 V2.1.1
- ☐ EN 301 489-3 V2.1.1
- ☐ EN 300 220 V3.1.1

☐ **LVD —Directive 2014/35/EU (from April 20th, 2016)**

- ☐ EN 60950-1 : 2011+ A2: 2013
- ☐ EN 60950-1 : 2006/A12: 2011

☒ RoHS — Directive 2011/65/EU

☒ CE marking

CE

(EU conformity marking)

ASRock EUROPE B.V.

(Company Name)

Bijsterhuizen 1111 6546 AR Nijmegen The Netherlands

(Company Address)

Person responsible for making this declaration:

(Name, Surname)

A.V.P

(Position / Title)

January 29, 2021

(Date)

P/N: 15G062272000AK V1.0