SUPERMICRO® SuperServer SYS-2029U-TN24R4T Quick Reference Guide

Board Layout

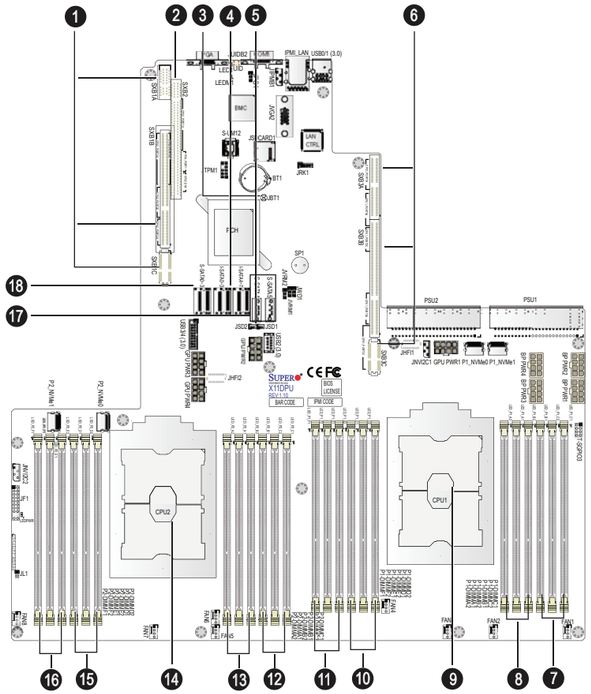

No.	Description
1	SXB1A/1B/1C: Proprietary PCI-e Slot used for WIO-Left Devices (supported by CPU2)
2	SXB2: Proprietary PCI-e Slot for WIO-Right Devices (supported by CPU2)
3	JBT1: CMOS Clear
4	I-SATA0~3: SATA 3.0 Ports (Intel PCH)
5	JSD1/JSD2: SATA DOM (Device_on_Module) Power Connectors
6	SXB3A/3B/3C: Proprietary PCI-e Slot for Ultra Riser Devices (supported by CPU1)
7	P1-DIMMC1(Blue)/P1-DIMMC2/P1-DIMMB1(Blue) slot
8	P1-DIMMB2/P1-DIMMA1(Blue)/P1-DIMMA2 slot
9	CPU1 (Install CPU1 first)
10	P1-DIMMD2/P1-DIMMD1(Blue)/P1-DIMME2 slot
11	P1-DIMME1(Blue)/P1-DIMMF2/P1-DIMMF1(Blue) slot
12	P2-DIMMC1(Blue)/P2-DIMMC2/P2-DIMMB1(Blue) slot
13	P2-DIMMB2/P2-DIMMA1(Blue)/P2-DIMMA2 slot
14	CPU2
15	P2-DIMMD2/P2-DIMMD1(Blue)/P2-DIMME2 slot
16	P2-DIMME1(Blue)/P2-DIMMF2/P2-DIMMF1(Blue) slot
17	S-SATA 4, 5: SATA 3.0 Ports (Intel SCU)
18	S-SATA0~3: SATA 3.0 Ports (Intel SCU)

Memory

DDR4 Memory Support for the Intel Xeon Scalable Processor Platform

Type	Ranks Per DIMM and Data Width	DIMM Capacity (GB)		Speed (MT/s); Voltage (V); Slots per Channel (SPC) and DIMMs per Channel (DPC)	
				2 Slots per Channel	
				1DPC (1-DIMM per Channel)	2DPC (2-DIMM per Channel)
		4 Gb	8 Gb	1.2 V	1.2 V
RDIMM	SRx4	8 GB	16 GB	2666	2666
RDIMM	SRx8	4 GB	8 GB	2666	2666
RDIMM	DRx8	8 GB	16 GB	2666	2666
RDIMM	DRx4	16 GB	32 GB	2666	2666
RDIMM 3Ds	QRX4	N/A	2H-64GB	2666	2666
	8RX4	N/A	4H-128GB	2666	2666
LRDIMM	QRx4	32 GB	64 GB	2666	2666
LRDIMM 3Ds	QRX4	N/A	2H-64GB	2666	2666
	8Rx4	N/A	4H-128 GB	2666	2666

Beep Codes

Beep Code	Error Message	Description
1 beep	Refresh	Circuits have been reset (Ready to power up)
5 short beeps and 1 long beep	Memory error	No memory detected in the system
5 beeps	No Con-In or No Con-Out devices	Con-In: USB or PS/2 keyboard, PCI or Serial Console Redirection, IPMI KVM or SOL Con-Out: Video Controller, PCI or Serial Console Redirection, IPMI SOL
1 beep per device	Refresh	1 beep for each USB device

Front View & Interface

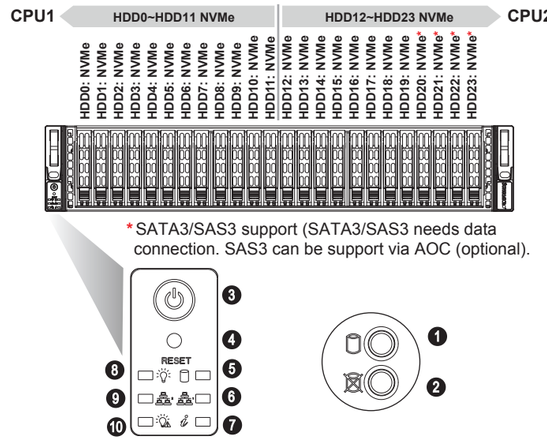

*SATA3/SAS3 support (SATA3/SAS3 needs data connection. SAS3 can be support via AOC (optional).

No.	Description
1	HDD Activity LED
2	HDD Status LED
3	Power Button
4	Reset Button
5	Device Activity LED

No.	Description
6	LAN1 LED
7	Information LED
8	Power LED
9	LAN2 LED
10	Power Failure LED

Rear View

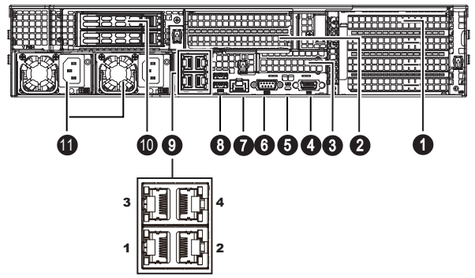

No.	Description
1	1 PCI-E 3.0 x16 (CPU2) Expansion Slot (Full-height 4.2”, Length 10.5”)
2	1 PCI-E 3.0 x16 (CPU1) Expansion Slot (Full-height 4.2”, Length 10.5”)*
3	1 PCI-E 3.0 x8 (CPU2) Expansion Slot (Low-profile 2.536”, Half-Length 6.6”)
4	VGA Port
5	UID Button (Unit Identifier Button)
6	COM Port
7	Dedicated LAN for IPMI
8	USB 3.0 Ports
9	4 10GBase-T LAN Ports
10	2 rear Hot Swap 2.5” HDD bays
11	Redundant Power Supply Module (See User Manual for LED guidance)

CPU/Heatsink Installation Part 1 & 2

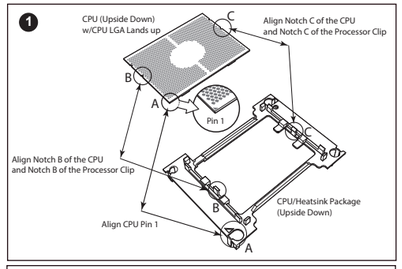

CPU/Heatsink Installation Part 3 & 4

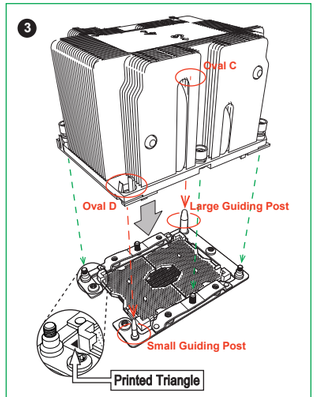

Mounting the Processor Heatsink Module into the CPU socket (on the motherboard)

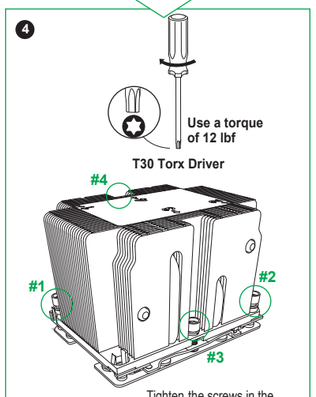

Tighten the screws in the sequence of 1, 2, 3, 4 (top 3 quarter view)

Caution

SAFETY INFORMATION
IMPORTANT: See installation instructions and safety warning before connecting system to power supply.
http://www.supermicro.com/about/policies/safety_information.cfm

WARNING:
To reduce risk of electric shock/damage to equipment, disconnect power from server by disconnecting all power cords from electrical outlets.
If any CPU socket empty, install protective plastic CPU cap

CAUTION:
Always be sure all power supplies for this system have the same power output. If mixed power supplies are installed, the system will not operate.

For more information go to :
http://www.supermicro.com/support