PFAFF

Perfection starts here.™

admire™ air 5000

User's Guide

This household sewing machine is designed to comply with IEC/EN 60335-2-28 and UL1594.

IMPORTANT SAFETY INSTRUCTIONS

When using an electrical appliance, basic safety precautions should always be followed, including the following:

Read all instructions before using this household sewing machine. Keep the instructions at a suitable place close to the machine. Make sure to hand them over if the machine is given to a third party.

DANGER – To reduce the risk of electric shock:

- A sewing machine should never be left unattended when plugged in. The electrical socket, to which the machine is plugged in should be easily accessible. Always unplug this sewing machine from the electric outlet immediately after using and before cleaning, removing covers, lubricating or when making any other user servicing adjustments mentioned in the instruction manual.

WARNING – To reduce the risk of burns, fire, electric shock, or injury to person:

- Do not allow to be used as a toy. Close attention is neccesary when this sewing machine is used by or near children.
- Use this sewing machine only for its intended use as described in this manual. Use only attachments recommended by the manufacturer as contained in this manual.
- Never operate this sewing machine if it has a damaged cord or plug, if it is not working properly, if it has been dropped or damaged, or dropped into water. Return the sewing machine to the nearest authorized dealer or service center for examination, repair, electrical or mechanical adjustment.
- Never operate the sewing machine with any air openings blocked. Keep ventilation openings of the sewing machine and foot control free from the accumulation of lint, dust, and loose cloth.
- Keep fingers away from all moving parts. Special care is required around the sewing machine needle.
- Always use the proper needle plate. The wrong plate can cause the needle to break.
- Do not use bent needles.
- Do not pull or push fabric while stitching. It may deflect the needle causing it to break.
- Wear safety glasses.
- Switch the sewing machine off (“0”) when making any adjustment in the needle area, such as threading needle, changing needle, threading bobbin, or changing presser foot, etc.
- Never drop or insert any object into any opening.
- Do not use outdoors.
- Do not operate where aerosol (spray) products are being used or where oxygen is being administrated.
- To disconnect, turn all controls to the off (“0”) position, then remove plug from outlet.
- Do not unplug by pulling on cord. To unplug, grasp the plug, not the cord.
- The foot control is used to operate the machine. Avoid placing other objects on the foot control.
- Do not use the machine if it is wet.
- If the LED lamp is damaged or broken, it must be replaced by the manufacturer or it's service agent or a similarly qualified person, in order to avoid a hazard.
- If the supply cord connected with the foot control is damaged, it must be replaced by the manufacturer or its service agent or a similarly qualified person, in order to avoid a hazard.
- This sewing machine is provided with double insulation. Use only identical replacement parts. See instructions for Servicing of Double-Insulated Appliances.

SAVE THESE INSTRUCTIONS

FOR CENELEC COUNTRIES ONLY:

This appliance can be used by children aged from 8 years and above and persons with reduced physical, sensory or mental capabilities or lack of experience and knowledge if they have been given supervision or instruction concerning use of the appliance in a safe way and understand the hazards involved. Children shall not play with the appliance. Cleaning and user maintenance shall not be made by children without supervision.

The noise level under normal operating conditions is less than 80dB.

The machine must only be used with foot control of type C-2085-1 for U.K., C-2060 for Continental Europe manufactured by 80dB.

FOR NON CENELEC COUNTRIES:

This sewing machine is not intended for use by persons (including children) with reduced physical, sensory or mental capabilities, or lack of experience and knowledge, unless they have been given supervision or instruction concerning use of the sewing machine by a person responsible for their safety. Children should be supervised to ensure that they do not play with the sewing machine.

The noise level under normal operating conditions is less than 80dB.

The machine must only be used with foot control of type C-1028 for USA/Canada, C-2065 for Australia manufactured by 80dB.

SERVICING OF DOUBLE INSULATED PRODUCTS

In a double-insulated product, two systems of insulation are provided instead of grounding. No ground means is provided on a double-insulated product, nor should a means for grounding be added to the product. Servicing of a double-insulated product requires extreme care and knowledge of the system and should be done only by qualified service personnel. Replacement parts for a double-insulated product must be identical to those parts in the product. A double-insulated product is marked with the words 'DOUBLE INSULATION' or 'DOUBLE INSULATED'.

We reserve the right to change the machine equipment and the assortment of accessories without prior notice, or make modifications to the performance or design. Such modifications, however, will always be to the benefit of the user and the product.

Intellectual Property

PFAFF, ADMIRE, and PERFECTION STARTS HERE are trademarks of KSIN Luxembourg II, S.a.r.l.

Please note that on disposal, this product must be safely recycled in accordance with relevant National legislation relating to electrical/electronic products. Do not dispose of electrical appliances as unsorted muncipal waste, use separate collection facilities. Contact your local government for information regarding the collection systems available. When replacing old appliances with new ones, the retailer may be legally obligated to take back your old appliance for disposal free of charge.

If electrical appliances are disposed of in landfills or dumps, hazardous substances can leak into the groundwater and get into the food chain, damaging your health and well-being.

Table of Content

ABOUT YOUR MACHINE **5**
Machine Overview 5
Machine Overview - Inside Parts 6
Accessories 6
Connecting the Foot Control and the Power Supply 7
Before Using Your Machine for the First Time 7
Setting Up the Telescopic Thread Stand 7
Front and Flat Bed Extension Covers 8
Front Cover 8
Flat Bed Extension Cover 8
Waste Tray 8
Handwheel 8
Presser Foot Lifter 9
Changing the Presser Foot 9
Presser Foot Guide Lines 9
Needle Information 10
Changing the Needles 10
Checking the Needle 10
Upper Cutter 11
Deactivate the Upper Cutter 11
Reactivate the Moveable Upper Cutter 11
2-thread Overlock Converter 11
Engaging 11
Disengaging 11

GETTING READY TO SEW **12**
General Threading Information 12
What Needle and Thread to Use ... 12
Placing the Thread Spools on the Spool Pins 13
Changing Thread 13
If the Thread Breaks While Sewing 13
Threading the Lower Looper 14
Threading the Upper Looper 16
Threading Loopers with the Looper Threading Wire or Standard Thread 18
Using the Looper Threading Wire 18
Using a Standard Thread 19
Threading the Right Needle 20
Threading the Left Needle 22
Using the Needle Threader 24
Differential Feed Adjustment 25
Presser Foot Pressure Adjustment 25
Cutting Width Adjustment 26
Stitch Length Adjustment 26
Stitch Finger Lever Setting 26
Thread Tension Settings 27

SEWING **28**
Stitch Overview 28
Explanation of Icons/Colors 28
4-Thread Overlock 28
3–Thread Overlock, Wide (and Narrow) 29
3-Thread Narrow Edge 29
3–Thread Rolled Edge 29
3–Thread Picot Edge 29
3–Thread Flatlock, Wide (and Narrow) 30
3–Thread Stretch Overlock 30
2–Thread Overedge, Wide (and Narrow) 30
2–Thread Wrapped Overlock, Wide (and Narrow) 30
2–Thread Rolled Edge 31
2–Thread Flatlock 31
Start Sewing 32
Pin Placement 32
Using Guide Lines 32
Securing the Thread Chain 33
Tie a Knot 33
Use a Sewing Needle 33
Use the Machine at the Start of a Seam 33
Use the Machine at the End of a Seam 33
Cutting the Seams Open 33
Gathering Using the Differential Feed 34
Rolled Edge Sewing 34
2-Thread Rolled Edge 34
3-Thread Rolled Edge / Narrow Edge 34
Flatlock Sewing 35
Standard Flatlock, Wide 35
Decorative Flatlock, Wide 35
Ladder Stitch 35
Sewing Corners 36
Outer Corners 36
Inner Corners 36

MACHINE MAINTENANCE **37**
Storage 37
Servicing 37
Cleaning the Upper Cutter Area 37
Cleaning the Feed Teeth 37
Cleaning the Looper Threader Pipe 38
Oiling the Machine 39
Replacing the Upper Cutter 40
Troubleshooting 40
Specifications 42

ABOUT YOUR MACHINE

Machine Overview

1. Thread guides
2. Thread guide bar
3. Top cover thread guide
4. Presser foot pressure dial
5. Left needle thread tension dial
6. Right needle thread tension dial
7. Upper looper thread tension dial
8. Lower looper thread tension dial
9. Flat bed extension
10. Spool pin
11. Cone holder
12. Stitch length dial
13. Differential feed dial
14. Lower looper pre-tension setting
15. Front cover
16. Handwheel
17. Foot control/electric power cord socket
18. Power switch
19. Needle threader lever
20. Thread cutter
21. Presser foot lifter
22. Needle threader switch
23. Presser foot
24. Stitch plate
25. Handle

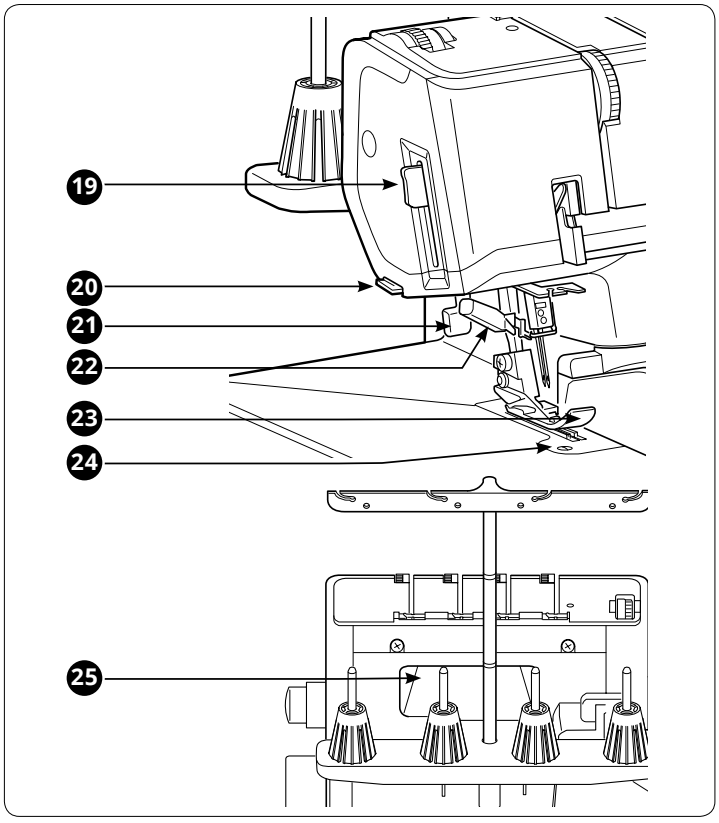

Machine Overview - Inside Parts

1. Stationary cutter
2. Upper cutter
3. Stitch finger
4. Upper looper
5. 2-thread overlock converter
6. Lower looper
7. Upper looper threading hole
8. Looper selection lever
9. Lower looper threading hole
10. Looper threader lever
11. Threading/Sewing switch
12. Cutting width adjusting dial
13. Upper cutter release knob
14. Opening for optional accessories
15. Stitch finger activation switch
16. Front cover guide

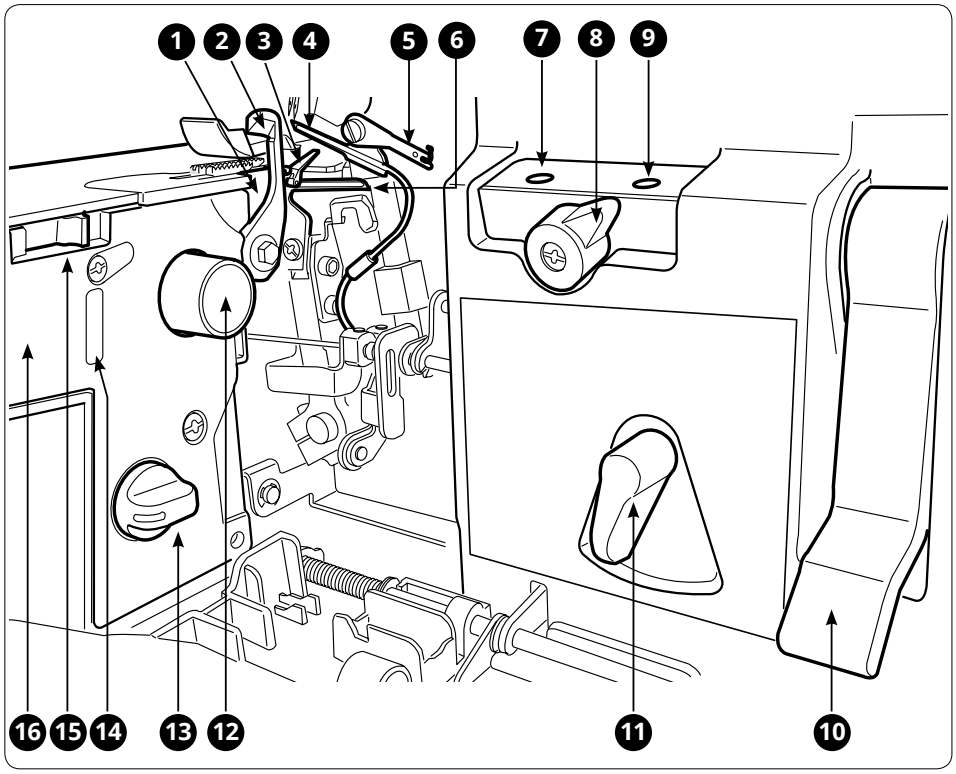

Accessories

1. Screwdriver (large)
2. Screwdriver (small)
3. Double-ended wrench
4. Tweezers
5. Needle set - (HAx1 SP#11)x2, (HAx1 SP#14)x3
6. Thread nets
7. Spool holder
8. Lint brush
9. Waste tray
10. Needle holder/converter pin
11. Upper cutter
12. Looper threading wire
13. Accessory box
14. Foot control (the foot control included may differ from the illustration, see page 7 for foot control specification)
15. Cover
16. Instruction manual

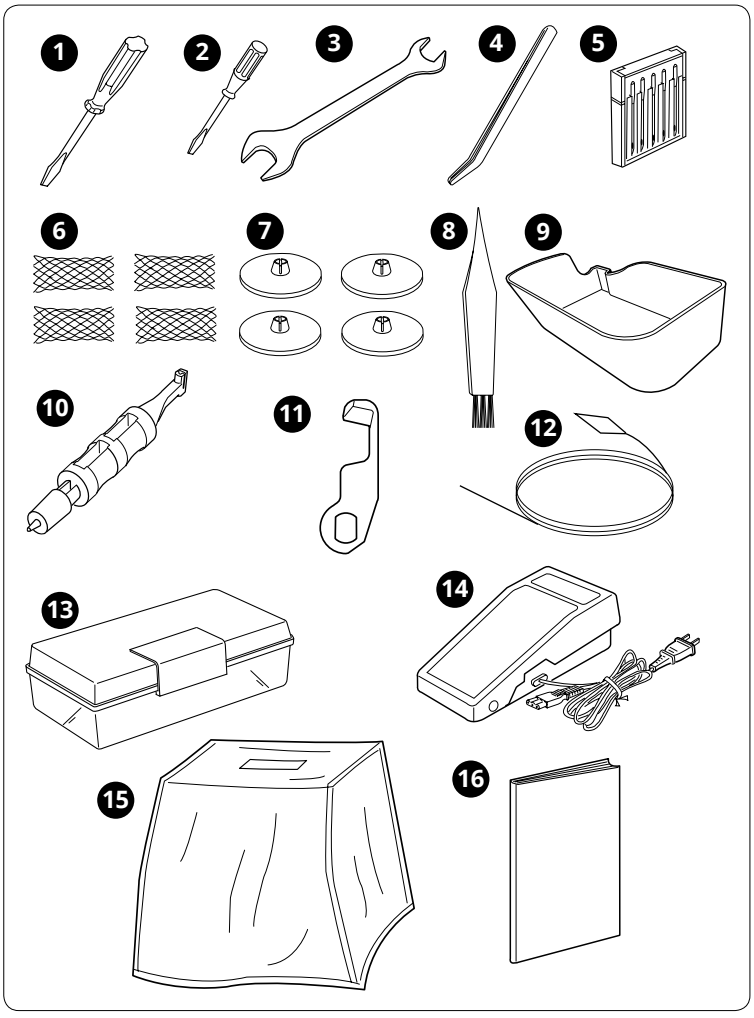

Connecting the Foot Control and the Power Supply

Foot control to use with this machine:

Type C-1028 for USA/Canada, C-2085-1 for U.K., C-2065 for Australia, C-2060 for Continental Europe.

Before plugging your machine in, make sure the voltage is the same as indicated on the lower rear side of the machine. Specifications vary from country to country.

- Connect the foot control/electric power cord to the socket on the machine (A).
- Plug the power cord plug into the electric outlet (B).
- Push the power switch (C) to "I" to turn on the machine.
- Press the foot control to start sewing (D). Use the foot control to adjust the sewing speed. The harder you press, the faster the machine will sew.
- To stop the machine from sewing, remove your foot from the control.
- Push the power switch to "0" to turn off the machine.

Note: When the front cover and/or the flat bed extension cover is/are opened, the safety switch is activated and prevents the machine from sewing, even if the foot control is pressed. The machine will also be prevented from sewing when the foot is raised.

Note: Your overlock machine is adjusted to provide the best stitch result at normal room temperature. Extreme hot and cold temperatures can affect the sewn result.

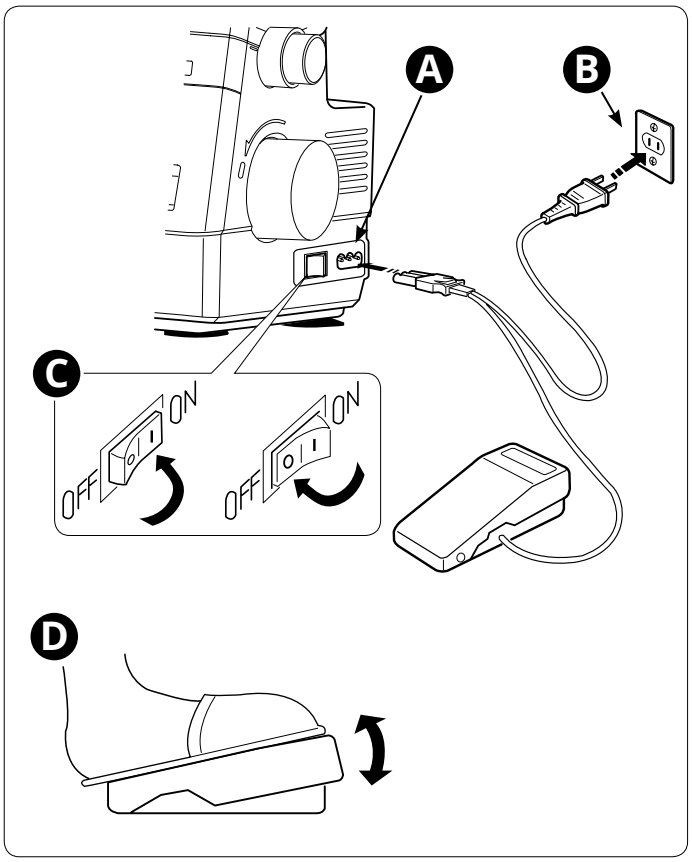

POLARIZED PLUG INFORMATION (FOR U.S.A. & CANADA ONLY)

This appliance has a polarized plug (one blade wider than the other). To reduce the risk of electric shock, this plug is intended to fit in a polarized outlet only way. If the plug does not fit fully in the outlet, reverse the plug. If it still does not fit, contact a qualified electrician to install the proper outlet. Do not modify the plug in any way.

Before Using Your Machine for the First Time

Before using your machine for the first time, place a scrap of fabric under the presser foot and run the machine without thread for a few minutes. Wipe away any oil which may appear.

Setting Up the Telescopic Thread Stand

Extend the telescopic thread stand to its full height, then turn until it clicks into place.

If the machine is already threaded, straighten the threads to prevent tangling.

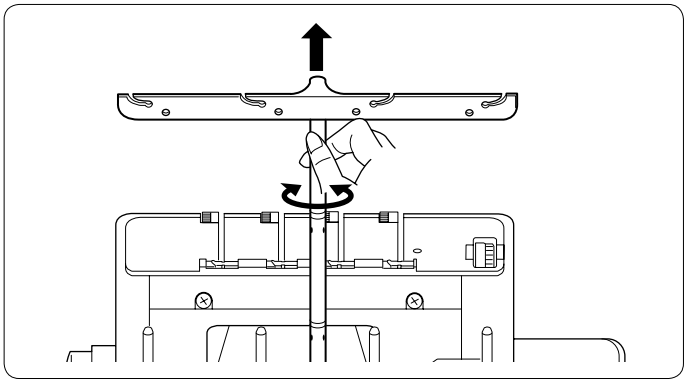

Front and Flat Bed Extension Covers

Front Cover

Open by pushing the cover to the right as far as it will go and then pull it toward you.

Close it again by pulling the cover upward and then sliding it to the left until it locks.

Note: The front cover has a safety switch and the machine will not sew if the front cover is open.

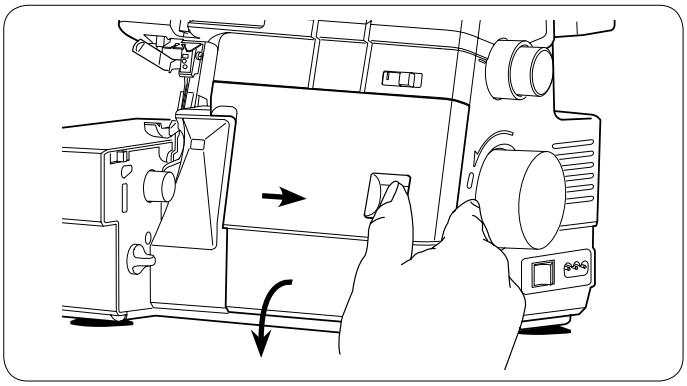

Flat Bed Extension Cover

Pull and swing the cover to the left to open. Swing it back and push in place to close.

Note: The flat bed extension cover has a safety switch and the machine will not sew if it is opened.

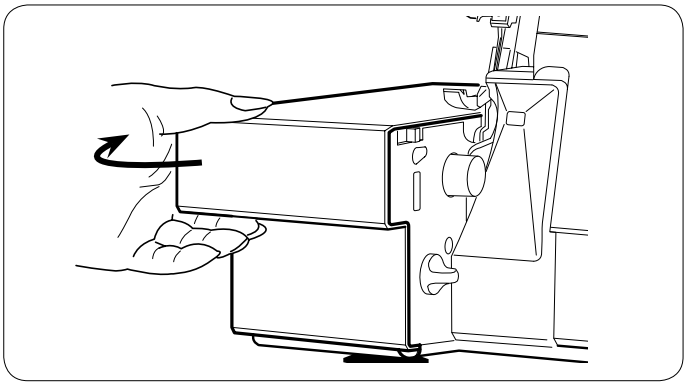

Waste Tray

The waste tray collects trimmings. Make sure the trim falls into the tray while sewing. Empty the tray after sewing.

Place the tray along the edge of the flat bed extention (A). Push the waste tray towards the front cover inserting the tabs into the slit under the front cover (B). Push until it clicks in place.

Pull the waste tray toward you to remove it.

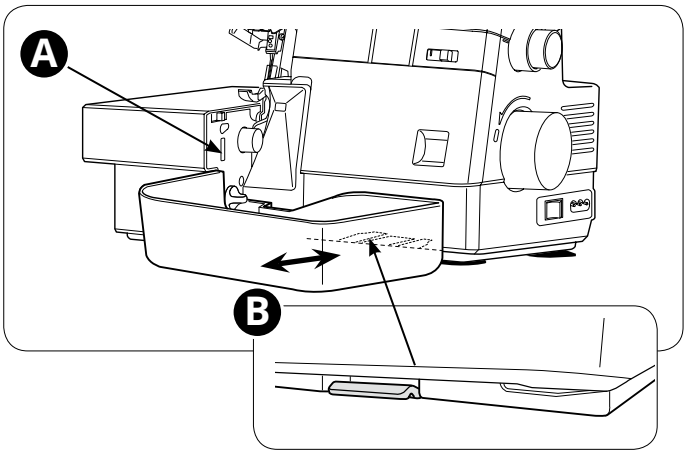

Handwheel

By turning the handwheel you can raise and/or lower the needles manually. Always turn the handwheel toward you.

When threading, adjusting the stitch finger lever or connecting/disconnecting the 2-thread overlock converter, the hand wheel should be set to locked position.

Put the "Threading/Sewing" switch in "Threading position" (A). To lock the handwheel, match the mark on the cover (B) with the mark on the handwheel (C).

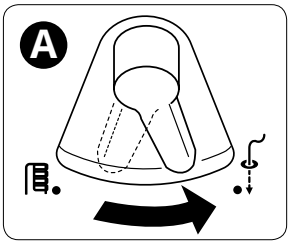

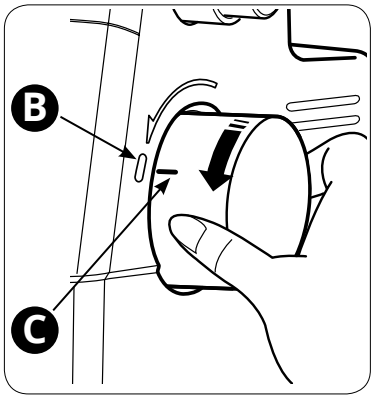

Presser Foot Lifter

Raise the presser foot by raising the presser foot lifter at the back of the machine. Pressing the lifter up puts the presser foot in extra lift position.

Always raise the presser foot lifter when threading. When raised, the tension disks open and the threading becomes easier.

Note: The machine will not sew if the presser foot is raised. Lower the presser foot before starting to sew.

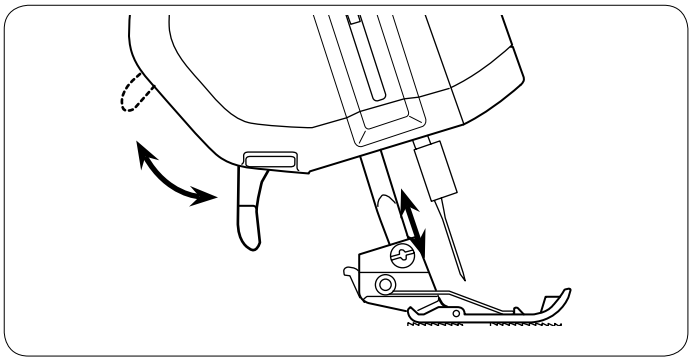

Changing the Presser Foot

⚠ *Turn off the main power switch and unplug the machine.*

- Raise the presser foot.
- Turn the handwheel toward you until the needles are at the highest position.
- Push the lever on the back of the presser foot ankle (A) to release the presser foot. The foot will come off.
- Place the new foot with the pin right underneath the groove of the ankle (B). Lower the presser foot lever to attach the foot. Raise the presser foot lifter again to make sure the foot is attached properly.

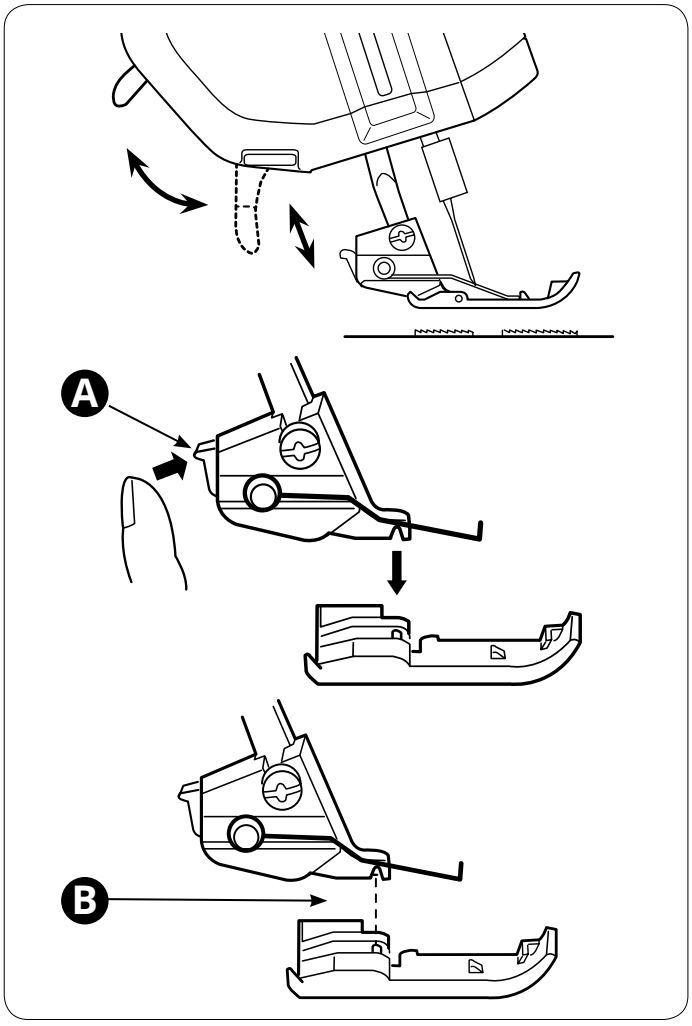

Presser Foot Guide Lines

The toe of the presser foot has two guide lines.

The left guide line (A) is positioned at the left needle position.

The right guide line (B) is positioned at the right needle position.

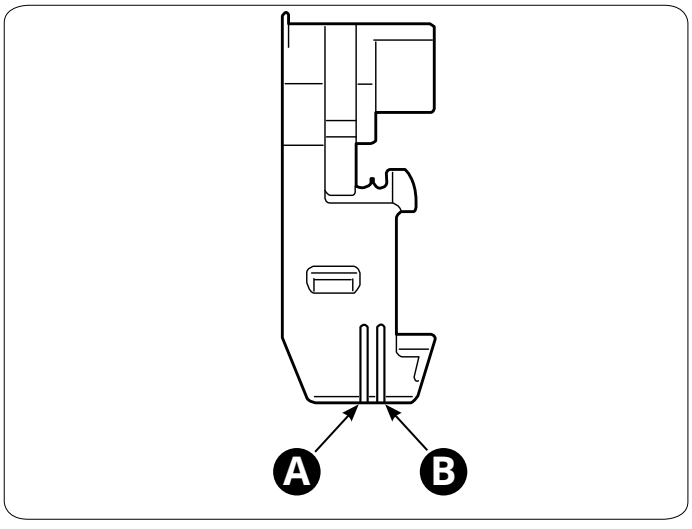

Needle Information

- Use HA-1 SP #14 or #11 needles or system Stretch 130/705 H-S, size #11/75 or #14/90.
- HA-1 SP #11 needles are set on the machine.

You can sew using one or two needles depending on what stitch to use. The left needle and needle clamp screw are marked "L", the right needle and needle clamp screw are marked "R".

Note: When using both needles, the left needle is positioned a little higher up than the right needle (they are not supposed to be 'level', like a twin needle).

Changing the Needles

⚠ *Turn off the main power switch and unplug the machine.*

- Turn the handwheel toward you until the needles are at the highest position.
- Insert the needle attached to the machine into the hole of the needle holder (A).
- Loosen, but do not remove the needle clamp screw (B) with the small screwdriver.
- Remove the selected needle.

Note: When using only one needle, slightly tighten the other needle clamp screw. This is to prevent loosing the needle clamp screw.

- Insert a new needle into the needle holder with the flat side to the rear (C).
- Insert the needle into the needle clamp as far as it will go. The top of the left needle should touch the edge of the needle bar (D) and the top of the right needle should touch the bottom of the needle bar (E).
- Securely tighten the needle clamp screw using the small screw driver.
- Pull the needle holder down to remove it from the needle.

Note: Do not over-tighten the screw as this may cause the needle clamp to be damaged.

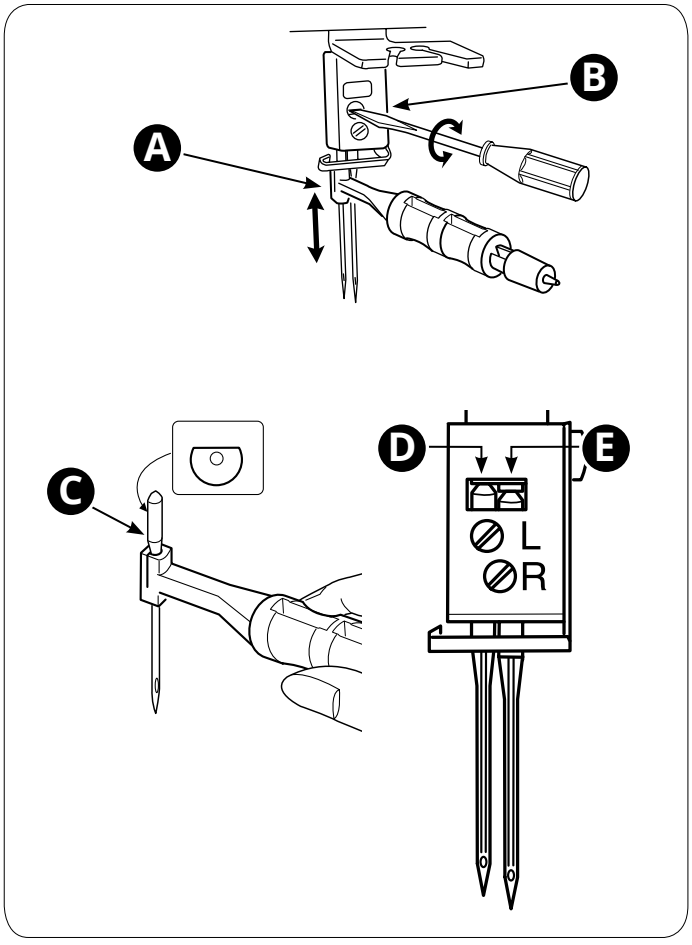

Checking the Needle

To make sure the needle is not bent, place the flat side of the needle onto something flat (needle plate, glass etc.). The gap between the needle and the flat surface should be consistent. Never use a bent or blunt needle.

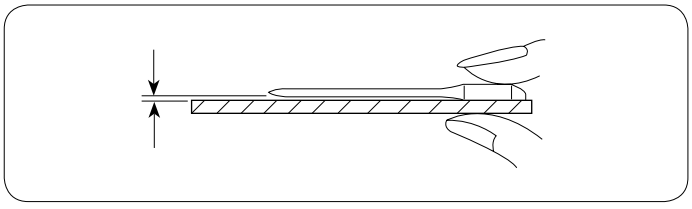

Upper Cutter

⚠ *Turn off the main power switch and unplug the machine.*

Deactivate the Upper Cutter

Deactivate the upper cutter for flatlock, pintucking, etc.

- Turn the handwheel toward you until the upper cutter (A) is raised to the highest position.
- Open the front cover.
- Push the the movable cutter knob (B) towards the cover (C). While pressed, turn the knob clockwise until the cutter clicks into the locked position (D).

Reactivate the Moveable Upper Cutter

- Open the front cover.
- Push the movable cutter knob towards the cover (C). While pressed, turn the knob clockwise until the cutter is activated again (E).

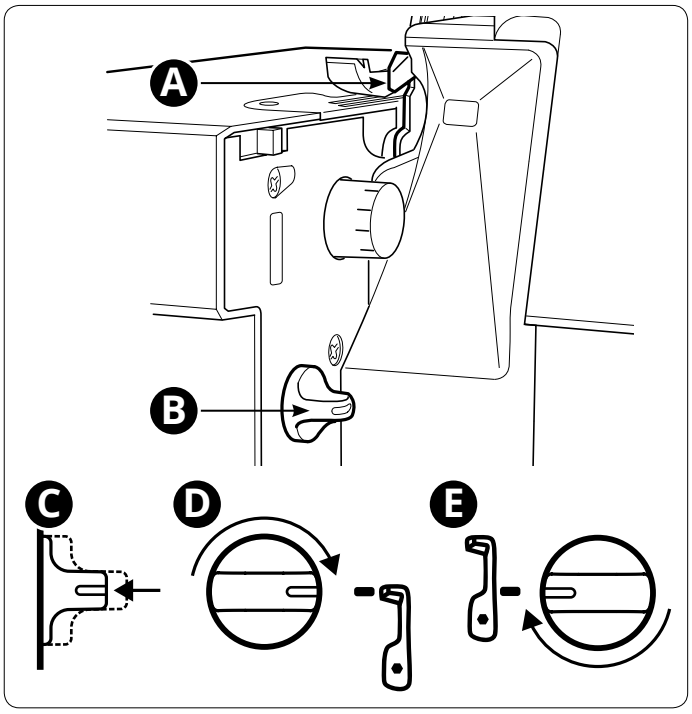

2-thread Overlock Converter

⚠ *Turn off the main power switch and unplug the machine.*

Engaging

2-thread overlock stitches are sewn using one needle thread and the lower looper thread. Before sewing, the 2-thread overlock converter must be attached to the upper looper.

- Open the front cover.
- Raise the needle.
- Insert the pin of the needle holder into the small hole (A) of the 2-thread overlock converter (B).

Turn the 2-thread overlock converter counter-clockwise until its hook matches the tip of the upper looper (C). (Make sure that the needle holder does not touch the upper knife).

Carfully push the 2-thread overlock converter backwards so that the hook (D) goes behind the bulge (E) of the upper looper and into the hole (F).

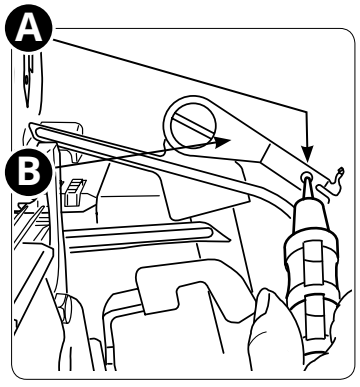

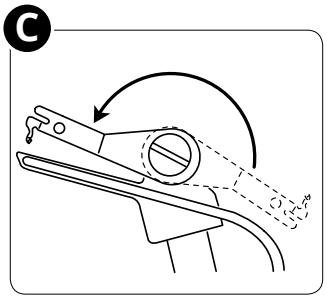

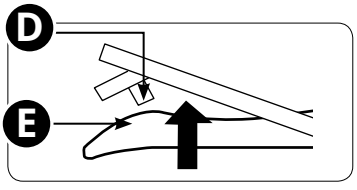

Upper view of the upper looper

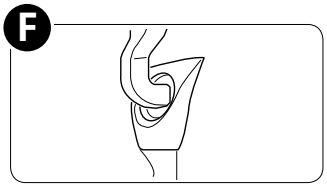

Rear view of the upper looper

Disengaging

Insert the pin of the needle holder into the small hole in the 2-thread overlock converter (A).

Carefully push the 2-thread overlock converter backwards (B) and turn it clockwise until the hook comes over the bulge.

Turn the 2-thread overlock converter until it clicks into the original position (C).

Remove the needle holder from the 2-thread overlock converter.

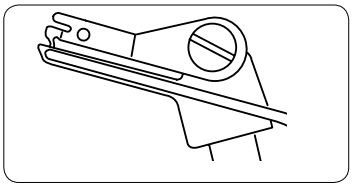

2-thread overlock converter engaged

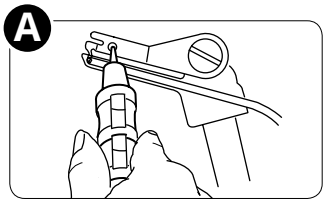

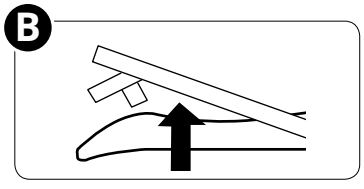

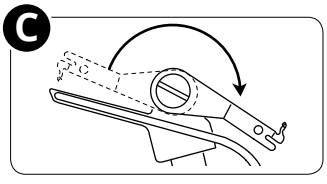

GETTING READY TO SEW

General Threading Information

The loopers and needles are color coded, to indicate the proper threading paths. Always start threading the loopers and then the needles from right to left (follow the order listed below).

1. Lower looper - Green
2. Upper looper - Red
3. Right needle - Blue
4. Left needle - Yellow

Note: Always raise the presser foot before threading.

Important:

If the threads break during sewing, re-thread all thread paths in the order listed below.

1. **Unthread the needle(s)**
2. **Unthread upper and lower looper**
3. **Thread the lower looper**
4. **Thread the upper looper**
5. **Thread the needle(s) from right to left**

See the table below for recommendations on what needles and thread to use for different fabric weights.

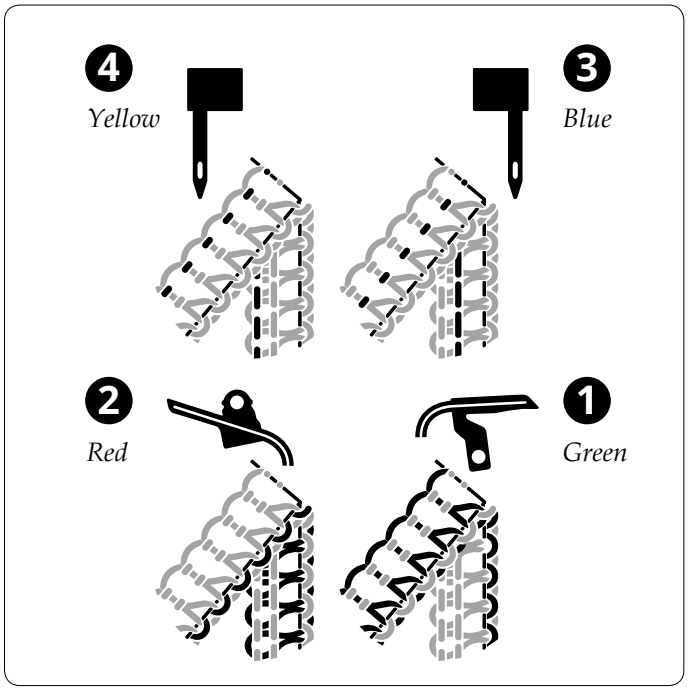

Black and white version of sticker from inside of machine cover

What Needle and Thread to Use with Different Fabrics

Light Fabric (voile, crepe, georgette, etc.)	*Medium Fabric* (cotton, linen, chino, wool, satin, etc.)	*Heavy Fabric* (denim, tweed, etc.)	*Knits* Knitted fabrics
Needles HAx1SP #11 or 130/705 H-S, size #11/75	*Needles* HAx1SP #14 or 130/705 H-S, size #14/90	*Needles* HAx1SP #14 or 130/705 H-S, size #14/90	*Needles* HAx1SP #11-14 or 130/705 H-S, size #11/75-#14/90
Thread Thread suitable for overlock machines			

Placing the Thread Spools on the Spool Pins

Place the thread spools over the cone holders on the spool pin. Firmly insert the spool holder into the spool.

A. If sewing with small thread spools, remove the cone holders. Place the spool with its slit side up, and put the spool holder cap on top of it.

B. If the thread slips down from the spool during threading and/or sewing, put a net over the spool to avoid thread jams.

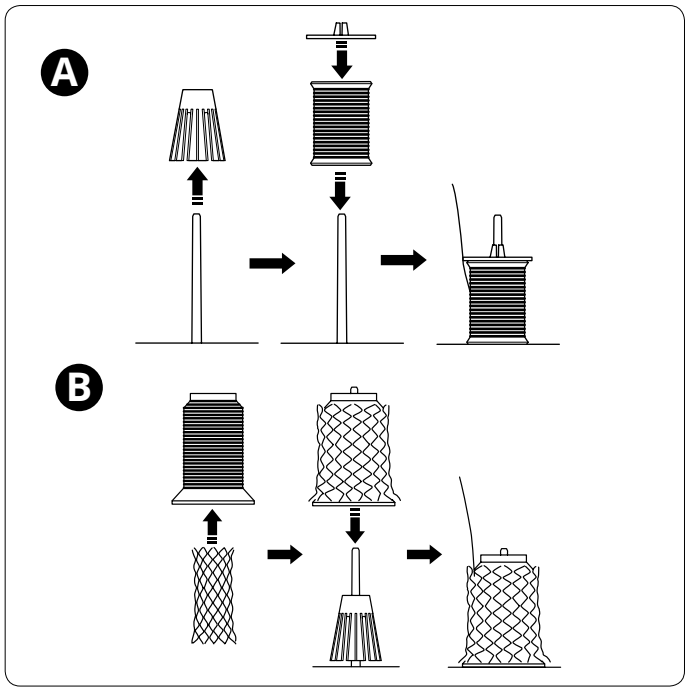

Changing Thread

The following is an easy way to change threads:

Cut the thread near the spool, behind the guides on the telescopic thread stand.

Remove the thread spool and place the new thread on the spool pin.

Tie the end of the new thread to the end of the old thread. Cut the thread tails to approx. 1″ (2-3cm) in length and firmly pull both threads to test knot security.

Raise the presser foot.

First note tension dial settings and then turn the tension dials down to "0".

Pull the threads through the machine one at a time until the knots are in front of the needle. If the threads cannot be pulled easily, check for tangles on thread guides or looping under thread stand.

Cut the thread behind the knot and thread the needle.

Return tension dials to previous settings.

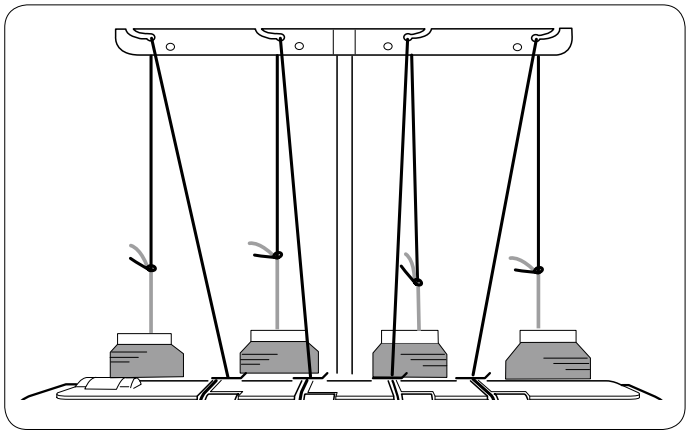

If the Thread Breaks While Sewing

If either of the upper or lower looper threads break while sewing, rethread both threads. Cut both looper threads above the threading holes, and remove the thread from the holes.

Rethread the loopers following the instructions on page 14-17.

Threading the Lower Looper

⚠ *Turn off the main power switch and unplug the machine.*

Note: Raise the presser foot lifter for easier threading.

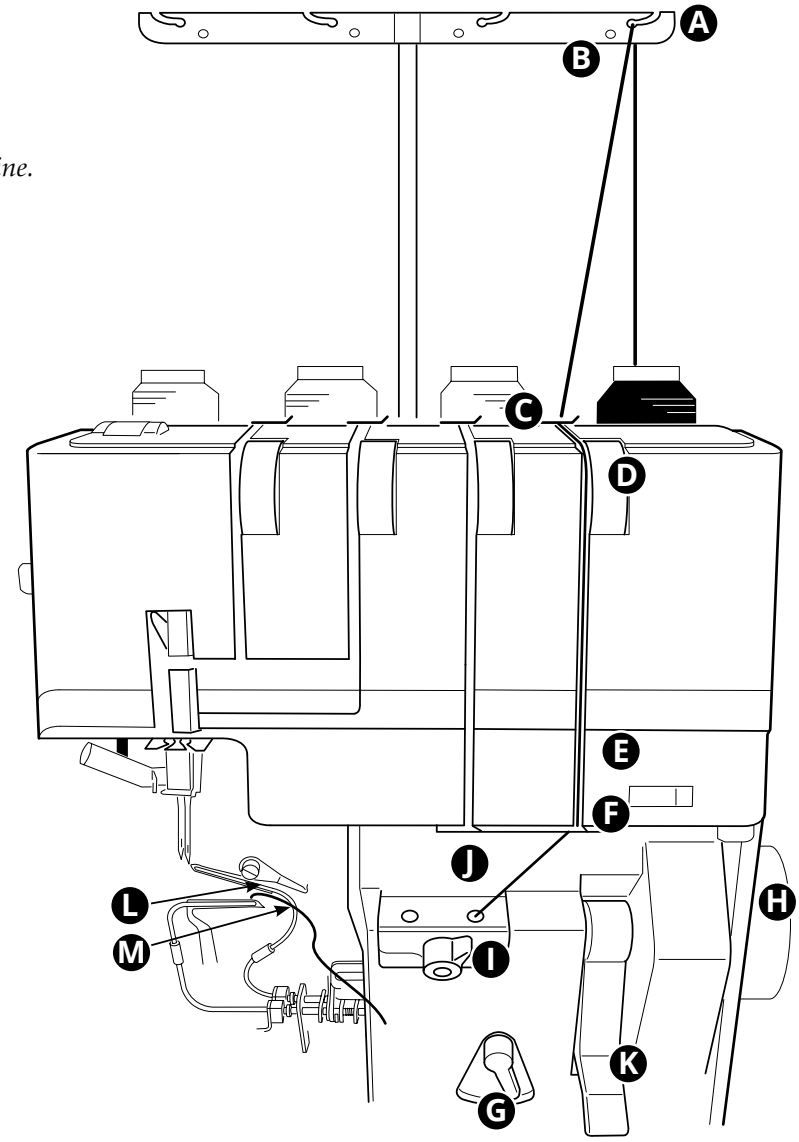

Place a thread spool on the very right spool pin. Pull the thread through the right thread guide from back to front (A).

Note: If the thread tends to slip away from the guide while sewing, pass the thread through both thread guide holes as shown (B).

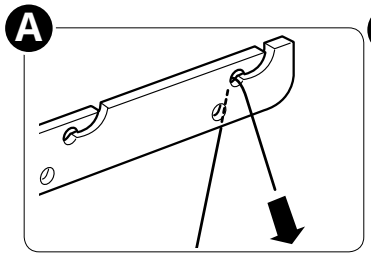

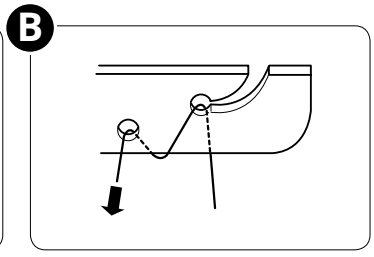

Slide the thread under the top cover thread guide (C) as illustrated.

Pull the thread along the threading slit. Using both hands, insert the thread between the tension disks (D).

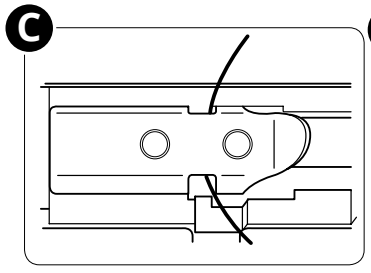

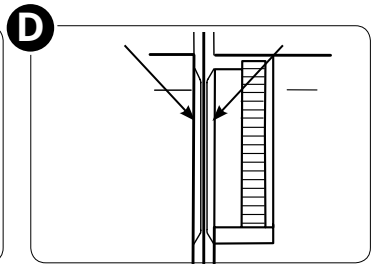

Set the lower looper pre-tension setting slider (E) to NORM.

Pull the thread down along the slit and into the lower looper thread guide (F).

Pull out approximately 12″ (30 cm) of thread. Make sure that the thread does not get tangled around the lever or the cover.

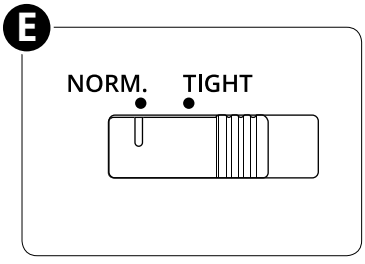

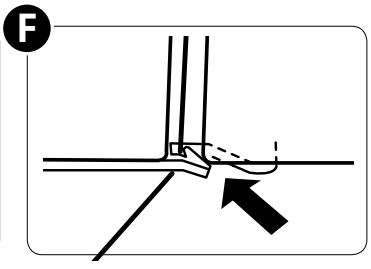

Set the Threading/Sewing switch to “Threading” position (G) by turning it to the right.

Turn the handwheel slowly toward you until the mark on the wheel matches the mark on the cover (H). The hand wheel will click and is locked in threading position.

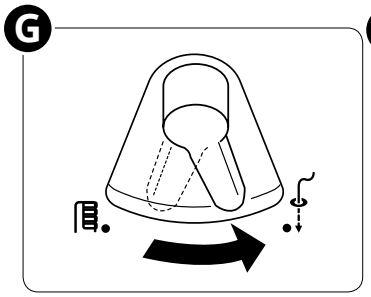

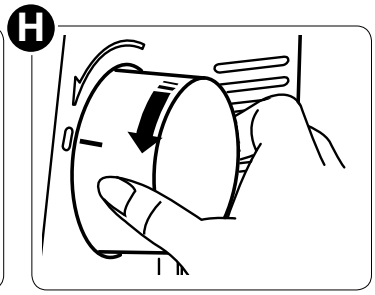

Turn the looper selection lever to the right (I) to activate the lower looper threading.

Using the tweezers, insert the end of the thread 2 cm or more into the lower looper threading hole (J).

Note:

- *Trim the thread end so that it can be inserted into the threading hole smoothly.*
- *If threading special threads, such as wooly nylon, etc., refer to pages 18-19.*

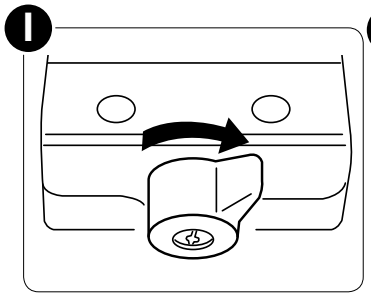

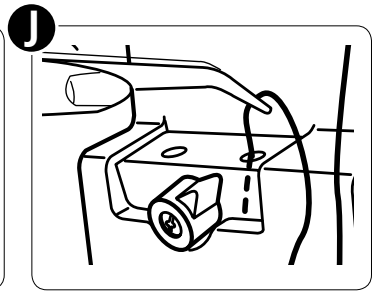

Raise the looper threader lever (K) until it clicks into place. Lower it again until it knocks into place.

Make sure that the thread comes out from the hole of the lower looper tip (L). The thread shall run in front of the upper looper threading pipe (M). If the thread comes out behind the pipe, use the tweezers to position the thread in front of the threading pipe.

If the thread does not come out from the hole, follow the procedure from step ”J” again.

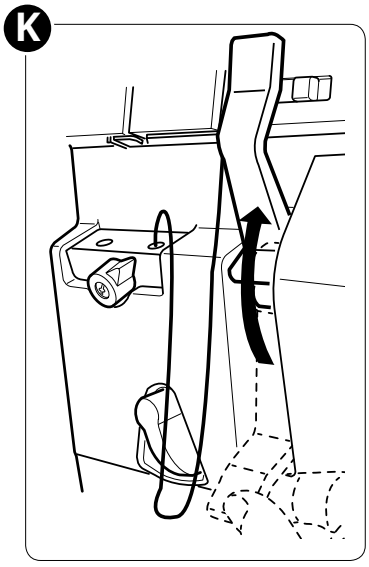

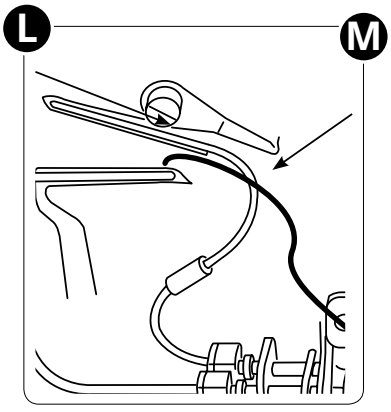

Set the Threading/Sewing switch (G) to “Sewing” position (N).

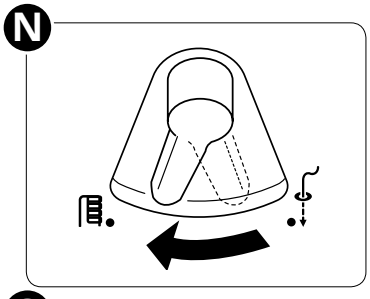

Pull 4˝ (10 cm) of the thread under the toe of the foot, and back between the presser fot foot and the upper cutter (O).

Close the front cover and lower the presser foot lifter.

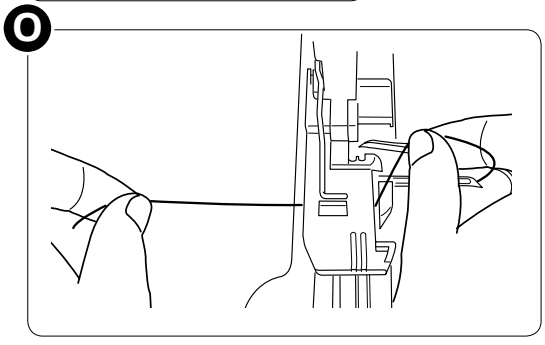

Threading the Upper Looper

⚠ *Turn off the main power switch and unplug the machine.*

Note: Raise the presser foot lifter for easier threading.

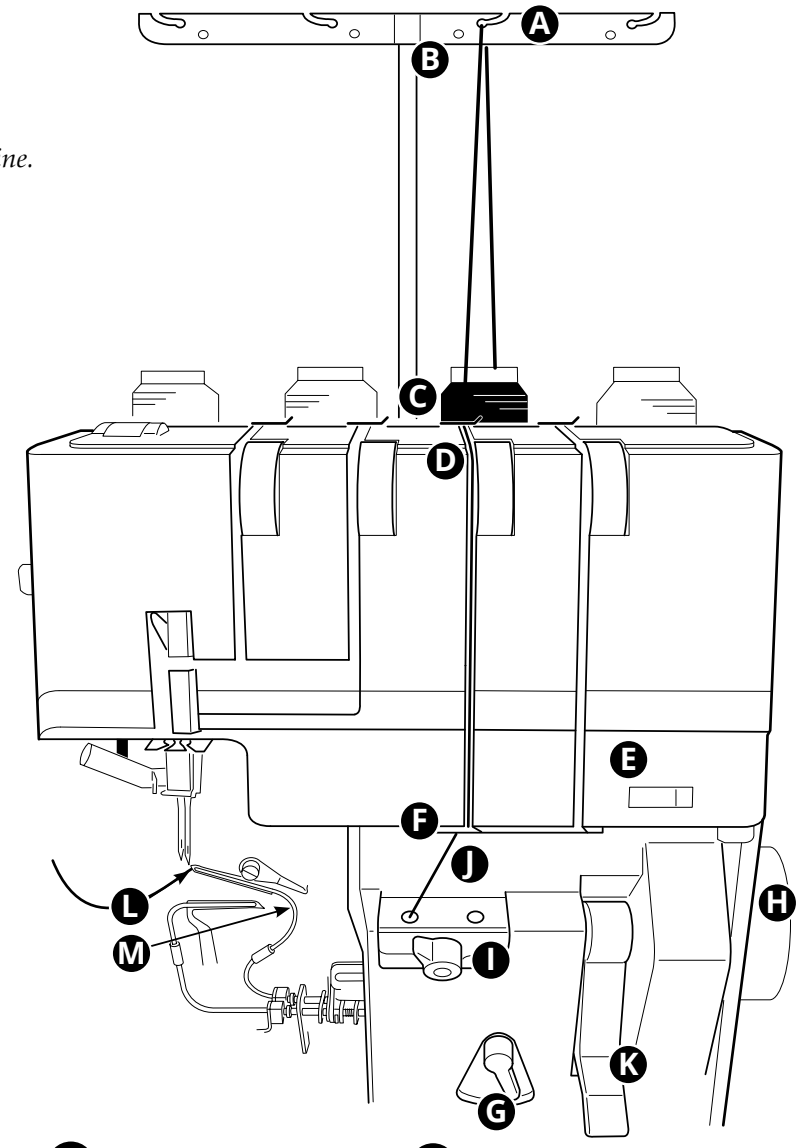

Place a thread spool on the second right spool pin. Pull the thread through the second right thread guide from back to front (A).

Note: If the thread tends to slip away from the guide while sewing, pass the thread through both thread guide holes as shown (B).

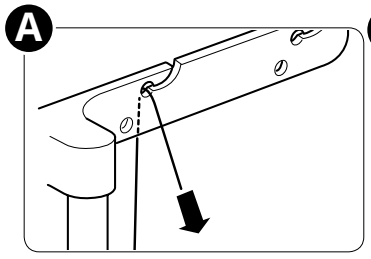

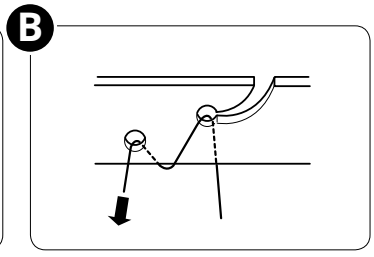

Slide the thread under the top cover thread guide (C) as illustrated.

Pull the thread along the threading slit. Using both hands, insert the thread between the disks (D).

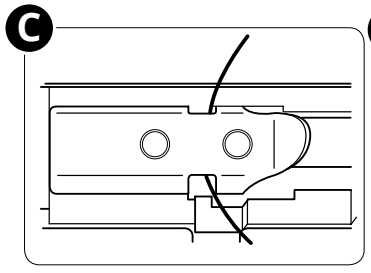

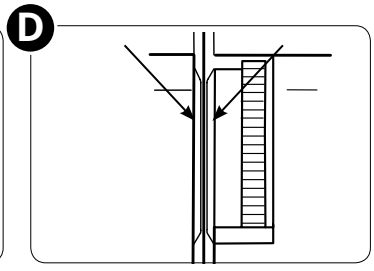

Set the lower looper pre-tension setting slider (E) to NORM.

Pull the thread down along the slit and into the upper looper thread guide (F).

Pull out approximately 12″ (30 cm) of thread. Make sure that the thread does not get tangled around the lever or the cover.

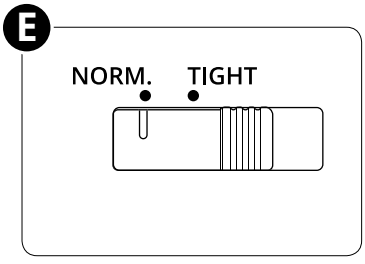

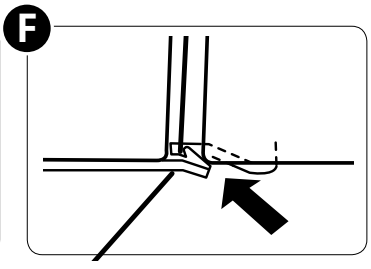

Set the Threading/Sewing switch to “Threading” position (G) by turning it to the right.

Turn the handwheel slowly toward you until the mark on the wheel matches the mark on the cover (H). The hand wheel will click and is locked in threading position.

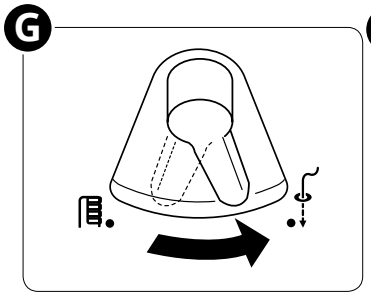

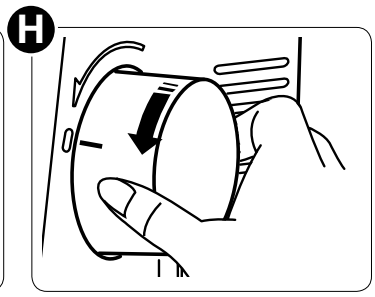

Turn the looper selection lever to the left (I) to activate the upper looper threading.

Using the tweezers, insert the end of the thread 2 cm or more into the upper looper threading hole (J).

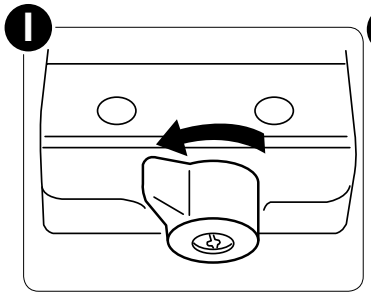

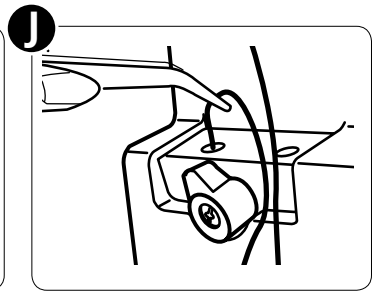

Note:

- *Trim the thread end so that it can be inserted into the threading hole smoothly.*
- *If threading special threads, such as wooly nylon, etc., refer to pages 18-19.*

Raise the looper threader lever (K) until it clicks into place. Lower it again until it knocks into place.

Make sure that the thread comes out from the hole of the upper looper tip (L).

If the thread does not come out from the hole, follow the procedure from step ”J” again.

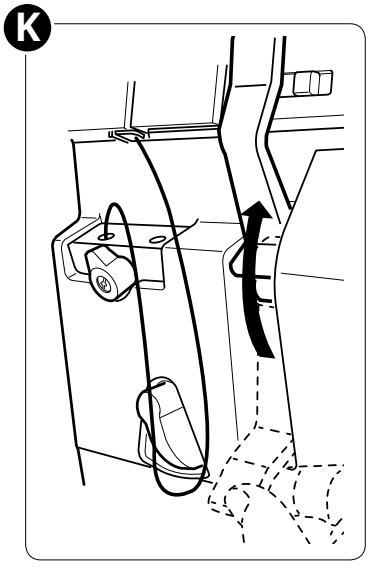

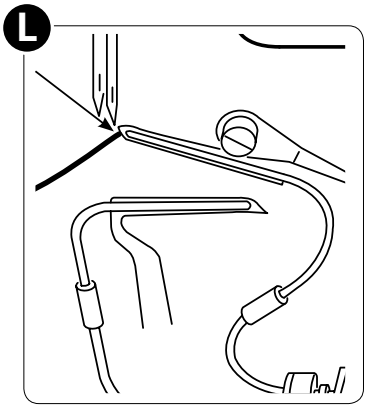

Set the Threading/Sewing switch (G) to “Sewing” position (M).

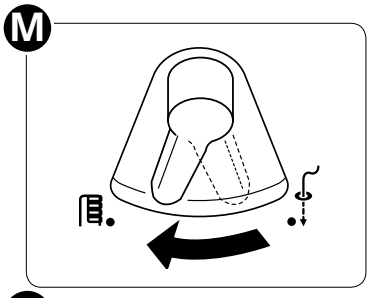

Pull 4″ (10 cm) of the thread under the toe of the foot, and back between the presser fot foot and the upper cutter (N).

Close the front cover and lower the presser foot lifter.

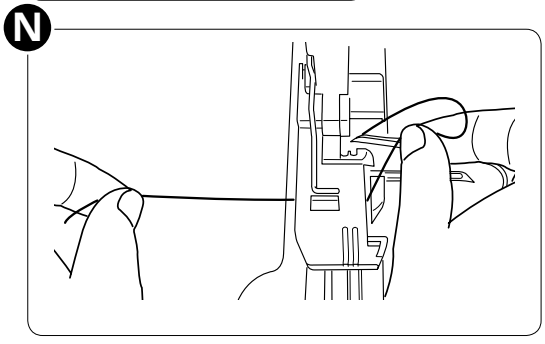

Threading Loopers with the Looper Threading Wire or Standard Thread

⚠ *Turn off the main power switch and unplug the machine.*

Note: Raise the presser foot lifter for easier threading.

Note: Do not raise or lower the looper thread lever while threading.

When sewing with specialty threads (such as wooly nylon), it can be easier to thread the loopers using any of the below ways:

- Use the looper threading wire
- Tie the specialty thread to standard overlock thread and pull through the loopers.

Using the Looper Threading Wire

Set the Threading/Sewing switch to "Threading" position (A) by turning it to the right.

Turn the handwheel slowly toward you until the mark on the wheel matches the mark on the cover (B). The hand wheel will click and is locked in threading position.

Thread the upper/lower looper threads up to the front of the looper threading hole.

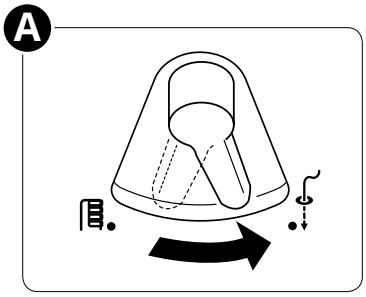

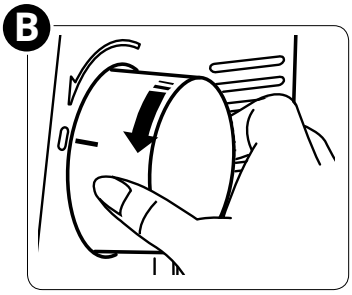

Take the looper threading wire and push the straight end (not the loop end) through the looper threader hole until it comes out from the the hole of the looper tip (C).

Pass approximately 2˝ (5 cm) of thread through the loop of the looper threading wire (D).

Carefully pull the end of the looper threading wire until the thread comes out from the hole of the looper tip.

Remove the thread from the looper threading wire.

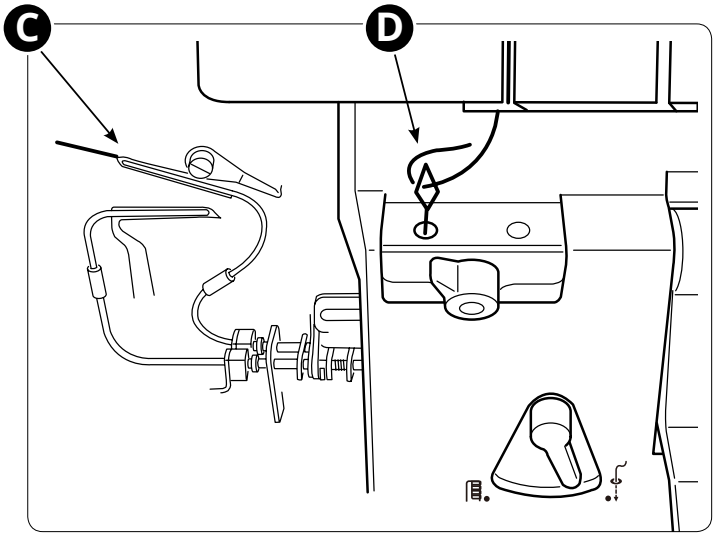

Set the Threading/Sewing switch to "Sewing" position.

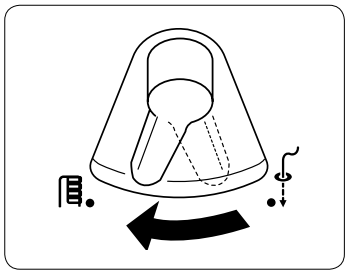

Pull 4˝ (10 cm) of the thread under the toe of the foot, and back between the presser fot foot and the upper knife.

Close the front cover and lower the presser foot lifter.

Using a Standard Thread

Set the Threading/Sewing switch to “Threading” position (A) by turning it to the right.

Turn the handwheel slowly toward you until the mark on the wheel matches the mark on the cover (B). The hand wheel will click and is locked in threading position.

Thread the upper/lower looper threads up to the front of the looper threading hole.

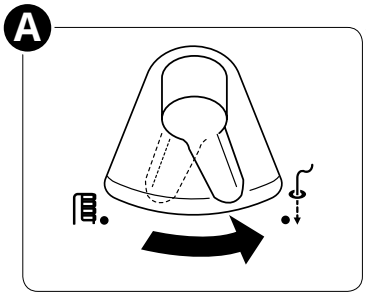

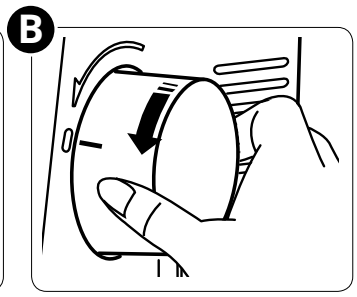

Prepare 12˝ (30 cm) of a standard thread and tie it 5 cm from the end of the looper thread as shown (C).

Note: When tying the standard thread to the looper thread, tie a knot as small as possible and cut any excess standard thread.

Using the tweezers, insert the end of the thread 2 cm or more into the lower looper threading hole (D).

Note: Trim the thread end so that it can be inserted into the threading hole smoothly.

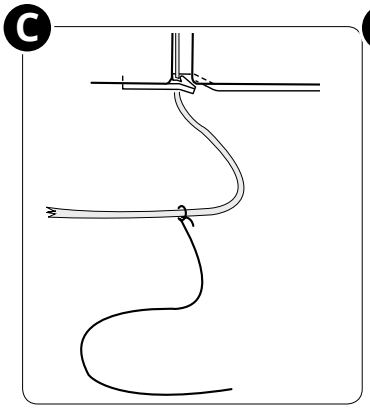

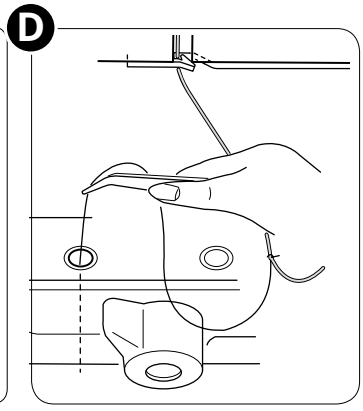

Raise the looper threader lever (E) until it clicks into place. Lower it again until it knocks into place.

Make sure that the thread comes out from the hole of the looper tip. Carefully pull the standard thread until the knot is about to go into the looper threader hole.

Then fold the loose end of the specialty thread as illustrated (F). Continue pulling the standard thread until the specialty thread is pulled through the threading channel and is threaded through the hole in the looper tip (G).

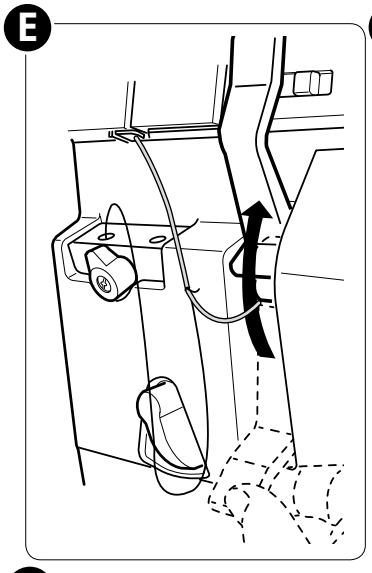

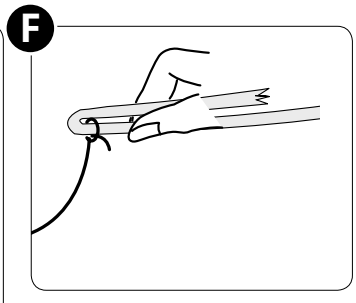

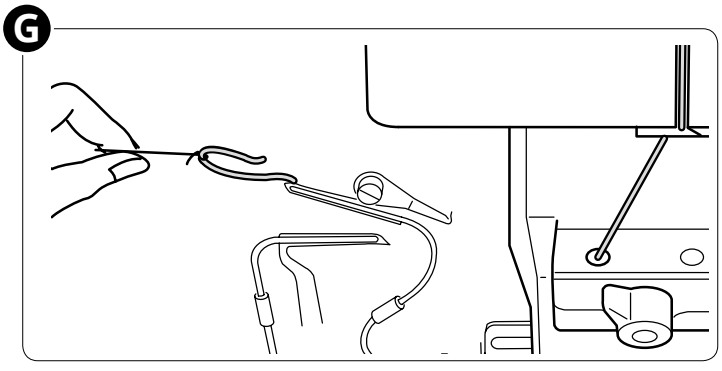

Set the Threading/Sewing switch to “Sewing” position.

Pull 4˝ (10 cm) of the thread under the toe of the foot, and back between the presser fot foot and the upper cutter.

Close the front cover and lower the presser foot lifter.

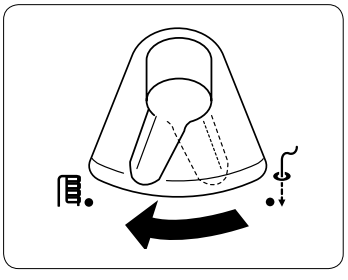

Threading the Right Needle

⚠ *Turn off the main power switch and unplug the machine.*

Note: Raise the presser foot lifter for easier threading. Raise the needles by turning the handwheel slowly toward you until the mark on the wheel matches the mark on the cover.

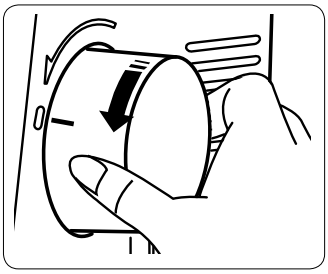

Place a thread spool on the second left spool pin. Pull the thread through the second left thread guide from back to front (A).

Note: If the thread tends to slip away from the guide while sewing, pass the thread through both thread guide holes as shown (B).

Slide the thread under the top cover thread guide (C) as illustrated.

Pull the thread along the threading slit. Using both hands, insert the thread between the tension disks (D).

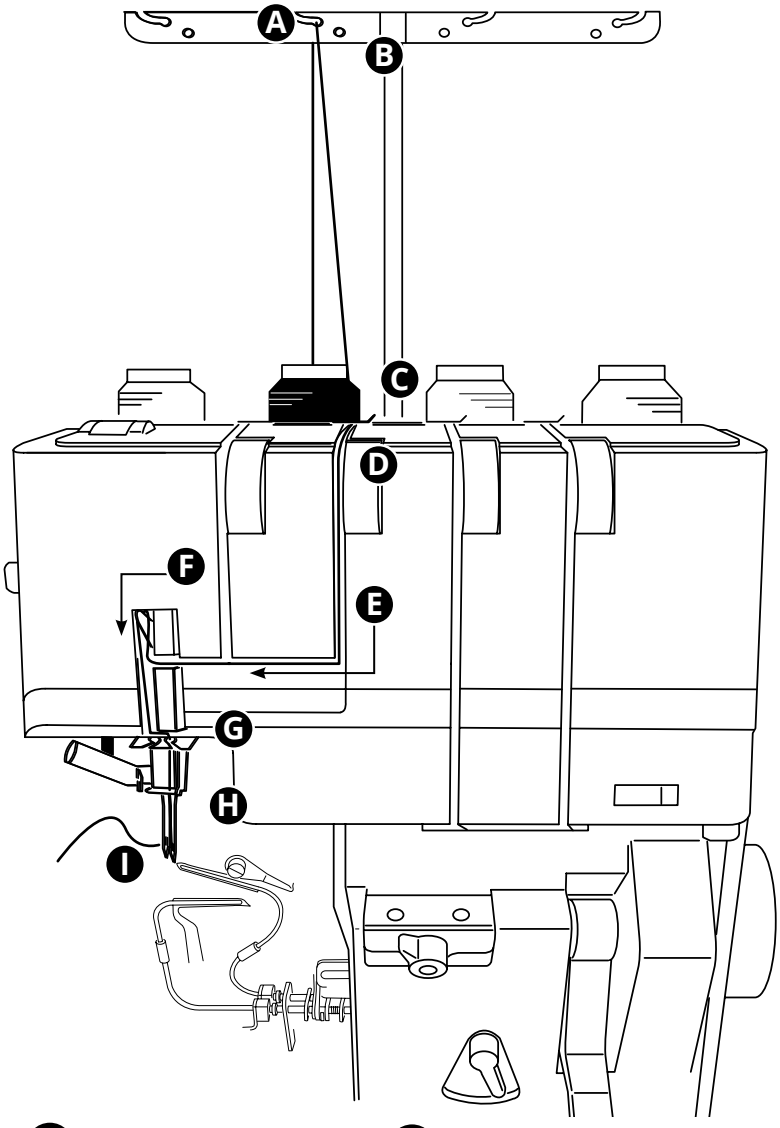

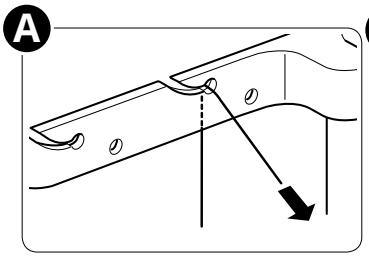

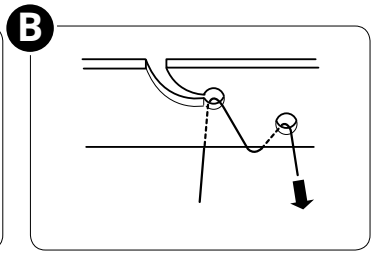

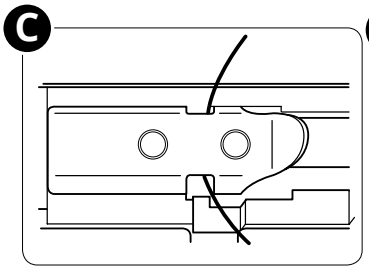

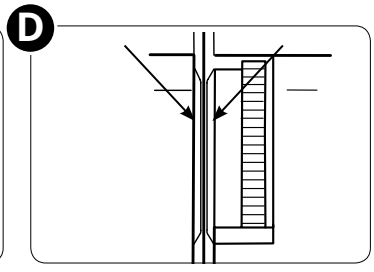

Pull the thread down along the slit and pass it to the left through the thread path (E).

Pass the thread from right to left around the take-up lever (F).

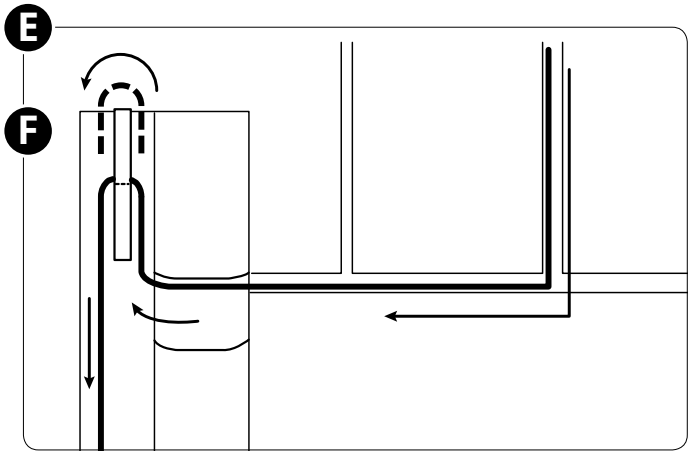

Pass the thread through the right slit of the needle thread guide (G).

Pass the thread through the needle bar thread guide from left to right (H).

Thread the right needle from front to back (I).

Note: See page 24 to learn how to use the needle threader.

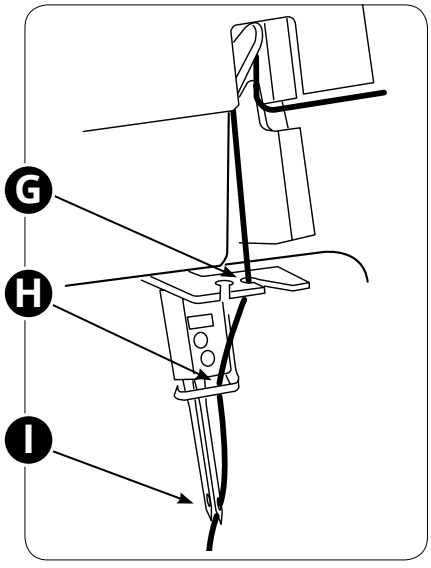

Pull out approximately 4″ (10 cm) of thread from the needle and slide it under the foot so that it runs in between the foot and the upper cutter.

Close the front cover and lower the presser foot lifter.

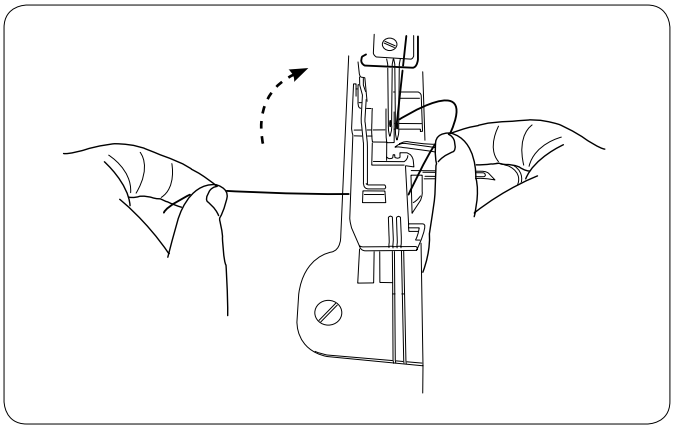

Threading the Left Needle

⚠ *Turn off the main power switch and unplug the machine.*

Note: Raise the presser foot lifter for easier threading. Raise the needles by turning the handwheel slowly toward you until the mark on the wheel matches the mark on the cover.

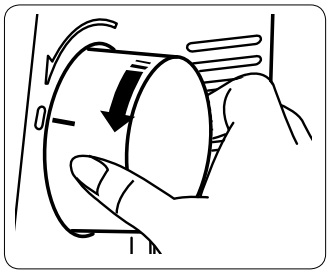

Place a thread spool on the left spool pin. Pull the thread through the left thread guide from back to front (A).

Note: If the thread tends to slip away from the guide while sewing, pass the thread through both thread guide holes as shown (B).

Slide the thread under the top cover thread guide (C) as illustrated.

Pull the thread along the threading slit. Using both hands, insert the thread between the tension disks (D).

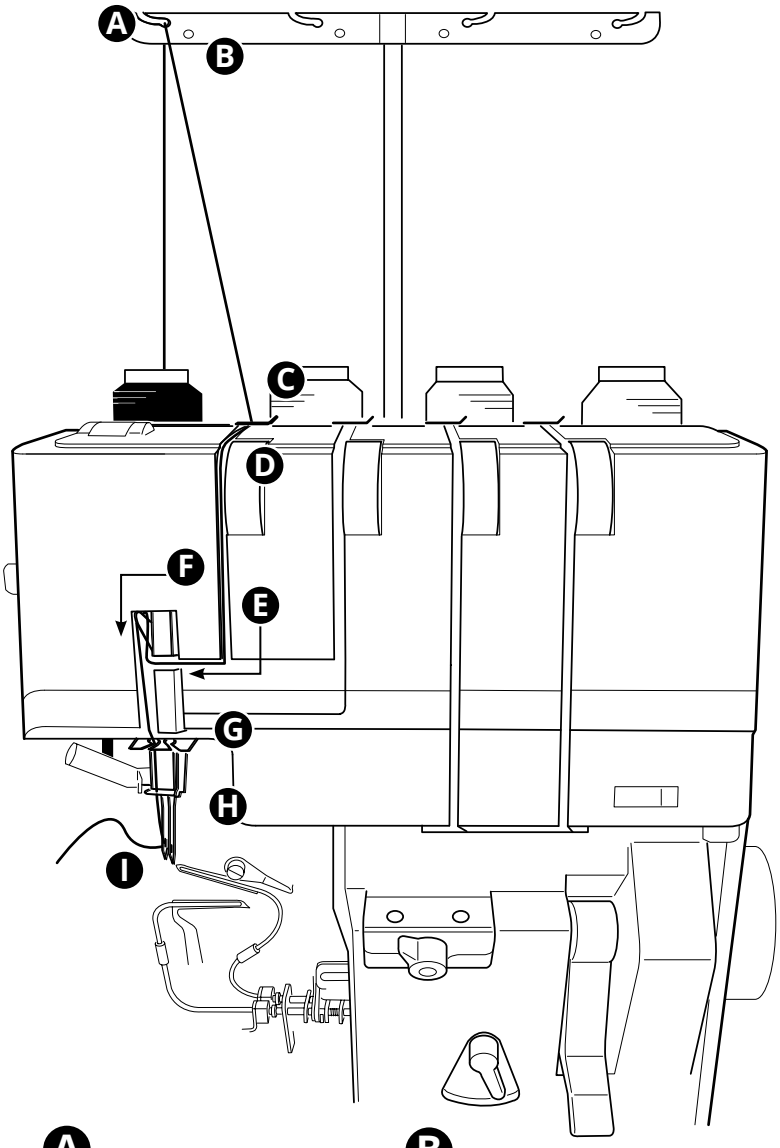

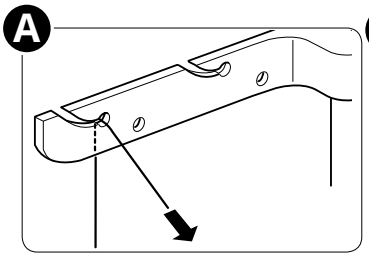

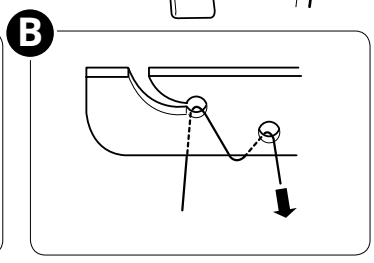

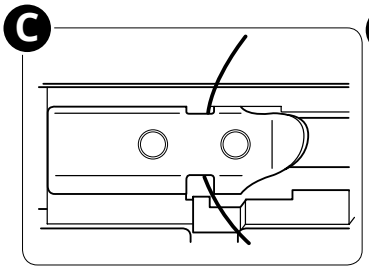

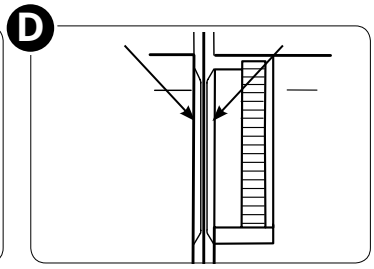

Pull the thread down along the slit and pass it to the left through the thread path (E).

Pass the thread from right to left around the take-up lever (F).

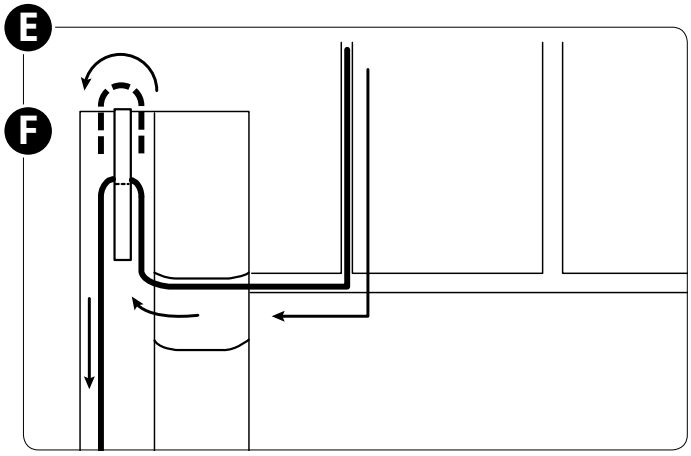

Pass the thread through the left slit of the needle thread guide (G).

Pass the thread through the needle bar thread guide from left to right (H).

Thread the left needle from front to back (I).

Note: See page 24 to learn how to use the needle threader.

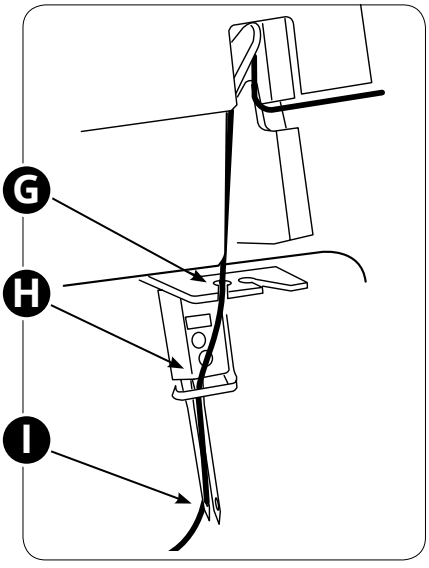

Pull out approximately 4″ (10 cm) of thread from the needle and slide it under the foot so that it runs in between the foot and the upper cutter.

Close the front cover and lower the presser foot lifter.

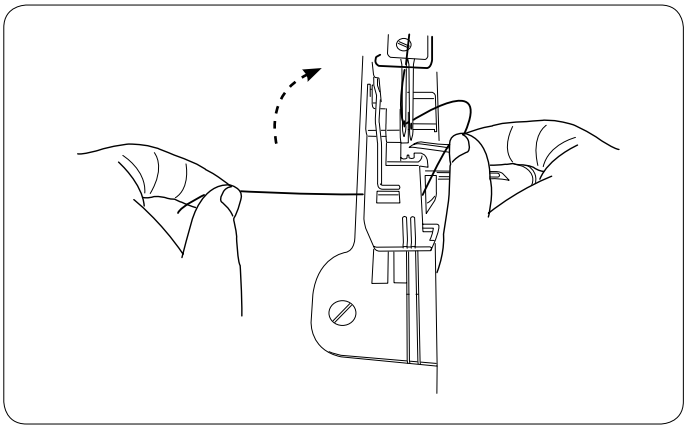

Using the Needle Threader

⚠ *Turn off the main power switch and unplug the machine.*

Raise the needles by turning the handwheel slowly toward you until the mark on the wheel matches the mark on the cover (A).

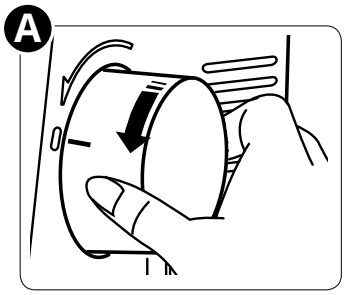

Lower the presser foot lifter (B).

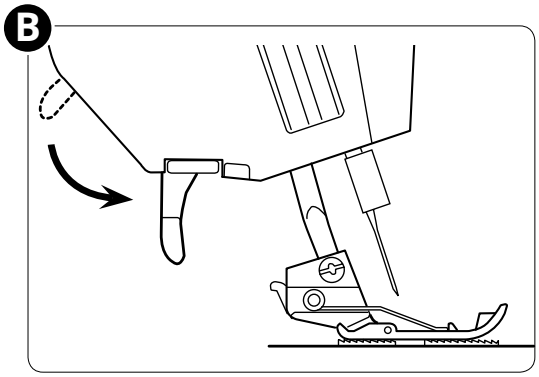

Set the needle threader switch to “R” when threading the right needle.

Set the needle threader switch to “L” when threading the left needle.

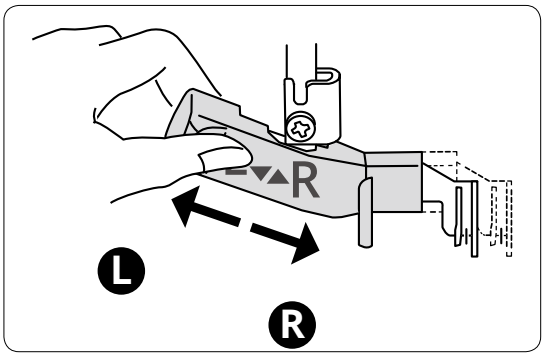

Pull down the needle threader lever (A) as far as it will go.

Draw the thread along the guide (B) on the needle threader switch from the left and under the hook (C).

Make sure that the thread or your finger does not touch the upper looper or the upper cutter.

Slowly raise the threader lever (D) so that a loop of the thread is pulled through the needle (E).

Pull the thread loop out behind the needle.

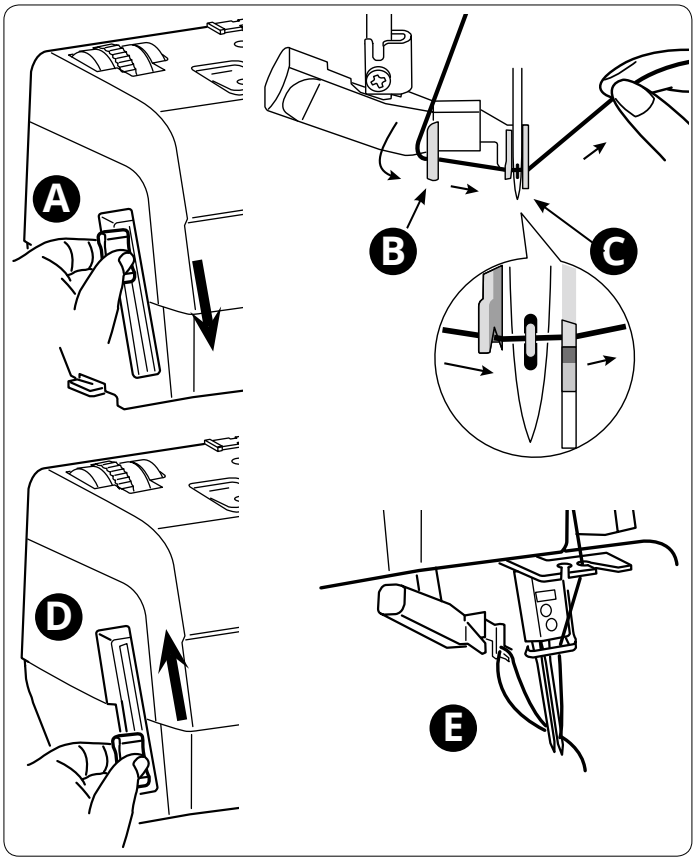

Differential Feed Adjustment

The differential feed system consists of two sets of feed teeth arranged one behind the other. Both feed teeth work independently of each other to give perfect results when sewing on speciality fabrics. When the amount of feed by the front feed teeth is changed in relation to the feed by the rear feed teeth it will "stretch" or "gather" the fabric.

Use the differential feed to prevent stretching of knit fabrics and puckering of lightweight fabrics.

For overlock stitching on normal fabric, set the differential feed adjusting dial (A) to 1.0. The differential feed dial clicks when you turn the dial at 1.0.

If the sewn fabric stretches (B), turn the dial counterclockwise (toward 2.0).

If the sewn fabric is gathered (C), turn the dial clockwise (toward 0.5).

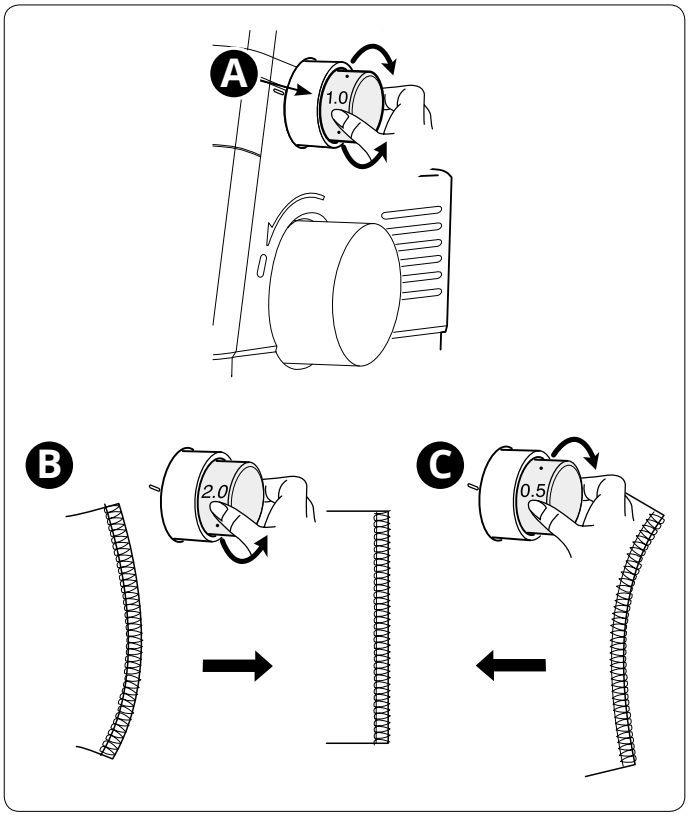

Presser Foot Pressure Adjustment

The presser foot pressure for sewing based on normal conditions should be set to "N" (A). Adjustments in some instances may be necessary. Increase or decrease the pressure until you are satisfied with the result. Always test sew on a sample of your fabric before sewing on your garment.

Decrease the pressure by turning the adjustment dial towards you.

Increase the pressure by turning the adjustment dial away from you.

Back to standard setting: Turn the adjustment dial until the mark is set to "N".

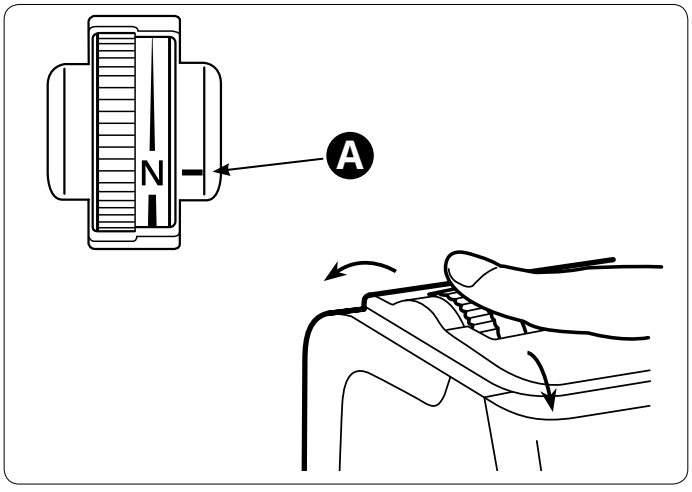

Cutting Width Adjustment

⚠ *Turn off the main power switch and unplug the machine.*

When the cutting width is too narrow or too wide for the set seam, adjust it by moving the staionary cutter.

Turn the cutting width adjustment dial to move the stationary cutter to the right or left.

Perfect Cutting width (A) – The edge of the fabric should align with the seam.

Too narrow cutting width (B) – there is a gap between the edge of the fabric and the seam. Increase the cutting width by turning the cutting width adjustment dial away from you.

Too wide cutting width (C) – the fabric gets rolled or folded into the seam. Decrease the cutting width by turning the cutting width adjustment dial towards you.

Sew and check the cutting width.

The standard position for the stationary cutter is when the right edge of the cutter (D) is aligned wih the guide line on the stitch plate (E).

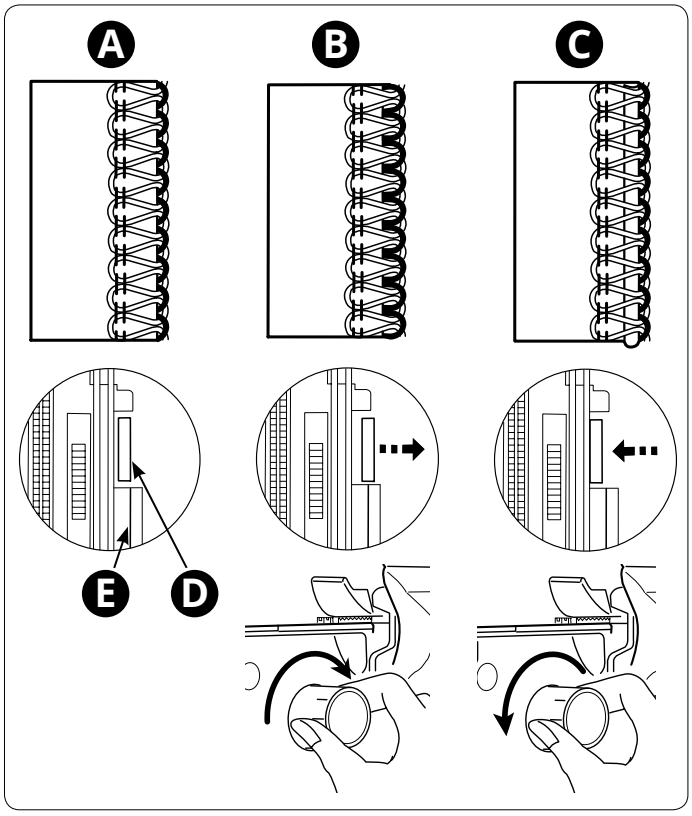

Stitch Length Adjustment

The stitch length dial (A) should be set to 3 (approximately 3 mm) for most sewing conditions. The dial clicks when you turn the dial to 3. The stitch length can be adjusted while sewing. The stitch length can be adjusted from 1 to 5 mm.

Adjust the stitch length to 4 mm when sewing on heavy-weight fabrics.

Adjust the stitch length to 2.5 mm when sewing on light-weight fabrics.

Set the stitch length to "R" for rolled and narrow hem (approximately 1.5mm).

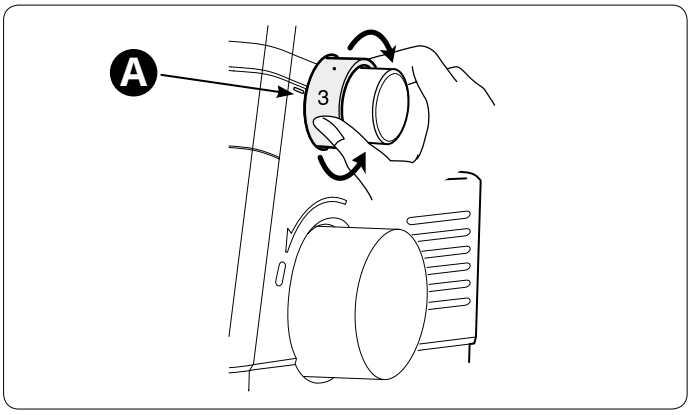

Stitch Finger Lever Setting

The stitch finger (A) is used to stabilize the fabric edge when forming stitches. The stitch finger lever should be set to "N" for all standard overlock sewing (B). To sew rolled edge you need to retract the stitch finger by setting the stitch finger lever to "R" (C).

When moving the stitch finger lever, be sure to push the lever as far as it will go in each direction.

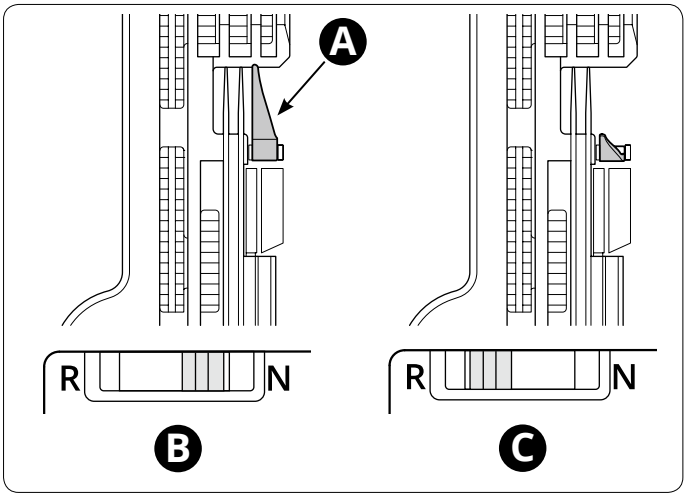

Thread Tension Settings

Set the thread tension to suit the type of fabric and thread used. As the number on the thread tension discs increases, the thread tension becomes tighter. See the stitch table on pages 28-31 for thread tension recommendations for each stitch.

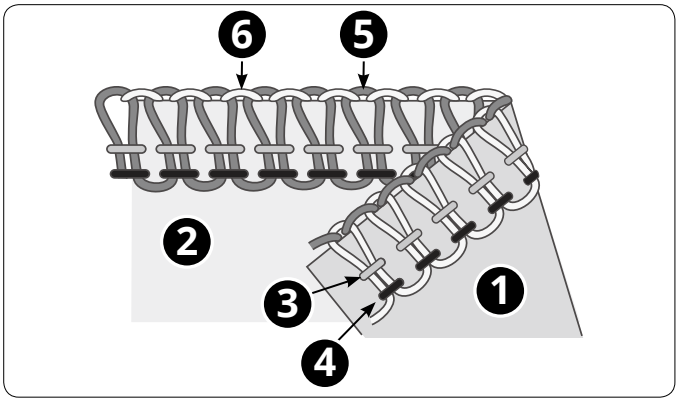

1. *Wrong side of fabric*
2. *Right side of fabric*
3. *Right needle thread*
4. *Left needle thread*
5. *Upper looper thread*
6. *Lower looper thread*

Correct Thread Tension

Lower looper thread and upper looper thread should be well balanced with the same tension (both looper threads should cross at the edge of the fabrics). Needle threads should not be too loose or too tight, but equally balanced tension.

Upper Looper Thread Is Too Loose (A)

The upper looper thread is unbalanced when it is pulled to the wrong side of the fabric. Tighten the thread tension of the upper looper or loosen the thread tension of the lower looper.

Upper Looper Thread is Too Tight (B)

The upper looper thread is unbalanced when it is pulling on the right side of the fabric. Loosen the thread tension of the upper looper or tighten the thread tension of the lower looper.

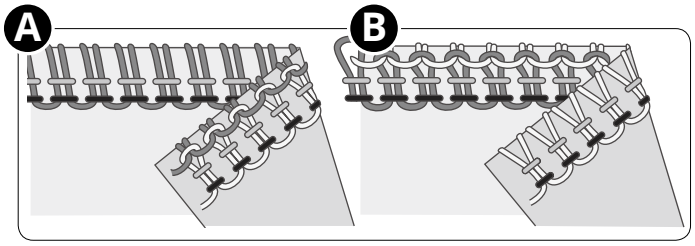

Lower Looper Thread is Too Loose (C)

The lower looper thread is unbalanced when it is pulled to the right side of the fabric. Tighten the thread tension of the lower looper or loosen the thread tension of the upper looper.

Lower Looper Thread is Too Tight (D)

The lower looper thread is unbalanced when it is pulling on the wrong side of the fabric. Loosen the thread tension of the lower looper or tighten the thread tension of the upper looper.

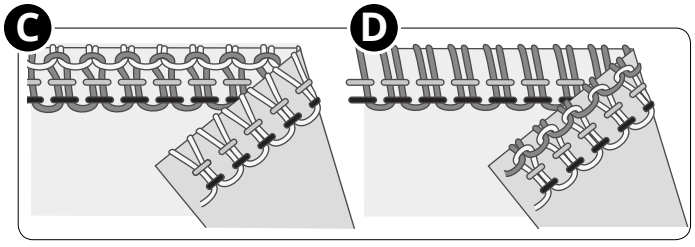

Left Needle Thread Is Too Loose (E)

If the left needle thread is too loose, tighten the thread tension of the left needle or loosen both looper threads.

Left Needle Thread is Too Tight (F)

If the left needle thread is too tight, loosen the thread tension of the left needle.

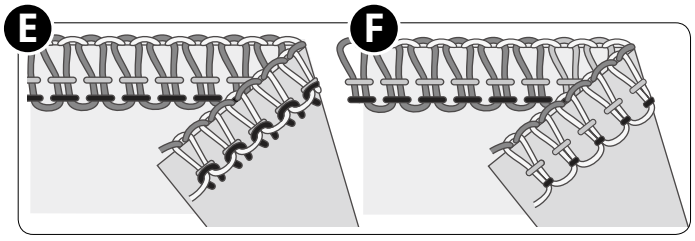

Right Needle Thread is Too Loose (G)

If the right needle thread is too loose, tighten the thread tension of the right needle.

Right Needle Thread is Too Tight (H)

If the right needle thread is too tight, loosen the thread tension of the right needle.

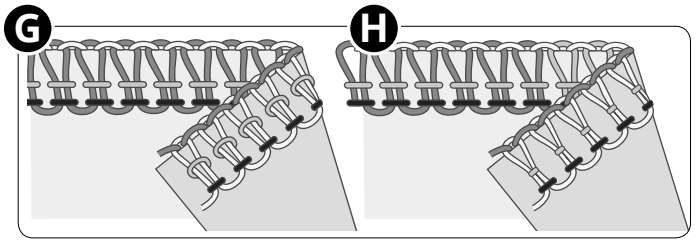

SEWING

On your overlock machine, different stitches are obtained by combining different needle positions, threading methods, tension settings, and the use of the 2-thread overlock converter.

See Chapter 2, Getting Ready to Sew, for references on how to set your machine.

Stitch Overview

The settings shown in the table below are our recommendations based on normal conditions. It may be necessary to adjust the thread tension depending on the stitch, type of fabric and thread you are using. For best results make tension adjustments in small increments of no greater than half a number at a time. Always test sew on a sample of your fabric before sewing on your project.

In the table below, different fabric weights and types are explained. For you to better understand how the stitches are formed, each of the threads are displayed in different shades of grey.

Explanation of Icons/Colors

- Needle position
- Differential feed
- Stitch length
- **NORM/ TIGHT** Lower looper pre-tension
- **N/R** Stitch finger position
- 2-thread overlock converter
- Right needle thread
- Left needle thread
- Upper looper thread
- Lower looper thread
- Wrong side of fabric
- Right side of fabric
- Right needle thread
- Left needle thread
- Upper looper thread
- Lower looper thread

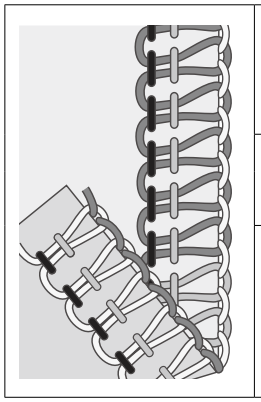

4-Thread Overlock

For all seams where stretch or give is needed, such as neck edges, side seams, sleeves, etc.

			NORM/ TIGHT	N/R		THREAD TENSION			
Both	1.0~1.5	3	NORM	N	-	3	3	3	3

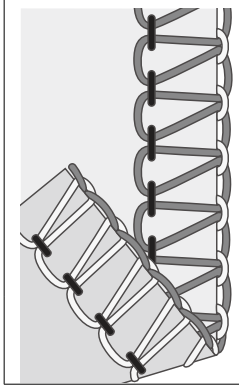

3–Thread Overlock, Wide (and Narrow)

For sewing two layers of stretchy fabric or overcasting a single layer of light to medium fabric. Use heavier threads in the loopers to create decorative edges.

Note: Use the right needle instead for a narrow stitch. Recommended thread tension settings within brackets in the chart.

			NORM/ TIGHT	N/R		THREAD TENSION							
Left	1.0~1.5	3	NORM	N	-	3	(-)	-	(3)	3	(3)	3	(3)

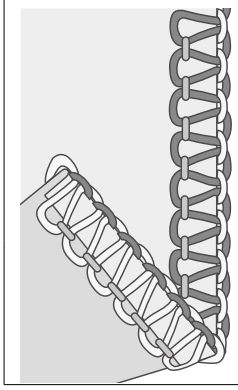

3-Thread Narrow Edge

For sewing two layers of stretchy fabric or overcasting a single layer of light fabric. Popular for creating decorative tucks. Use decorative threads in the loopers and regular thread in the needle. Use different colors in the loopers to get an interesting effect.

Note: Not recommended for heavy weight fabrics.

			NORM/ TIGHT	N/R		THREAD TENSION			
Right	1.0	R	NORM	R	-	-	4	1~3	3

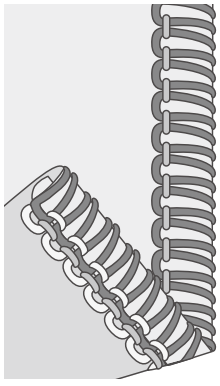

3–Thread Rolled Edge

For edging lightweight fabrics. It gives a nice finish on silky scarves, pillow ruffles and napkins. For a beautiful rolled edge, thread the loopers with a decorative lightweight thread, such as 40 weight rayon, for a beautiful satin edge and the needle and lower looper with lightweight regular thread.

Note: Not recommended for heavy weight fabrics.

			NORM/ TIGHT	N/R		THREAD TENSION			
Right	1.0	R	TIGHT	R	-	-	3~4	1~3	3

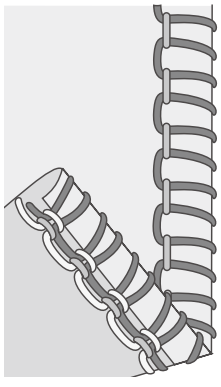

3–Thread Picot Edge

Increased stitch length will form a picot edge on your fabric. This edge is a nice way to give a decorative finish to wedding or bridesmaid dresses.

			NORM/ TIGHT	N/R		THREAD TENSION			
Right	1.0	3-4	TIGHT	R	-	-	2-4	3	3-4

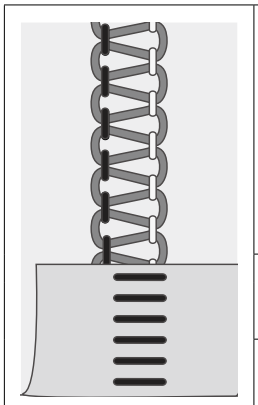

3–Thread Flatlock, Wide (and Narrow)

For sewing fabrics together with a decorative effect either with the flatlock side or the ladder stitch side. Create varying effects by threading the loopers with decorative thread, such as 40 weight rayon.

Note: Use the right needle instead for a narrow stitch. Recommended thread tension settings within brackets in the chart.

			NORM/ TIGHT	N/R		THREAD TENSION							
Left	1.0	3~4	NORM	N	-	0-2	(–)	–	(0)	0	(0)	8-9	(3-7)

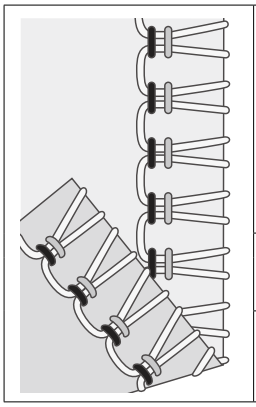

3–Thread Stretch Overlock

For sewing extra stretchy fabrics. Add additional stretch by using a stretchy type thread in the lower looper. Change the thread tension accordingly.

Note: Not recommended for heavy weight fabrics.

			NORM/ TIGHT	N/R		THREAD TENSION			
Both	1.0	2-3	NORM	N	Yes	3	2	-	1-2

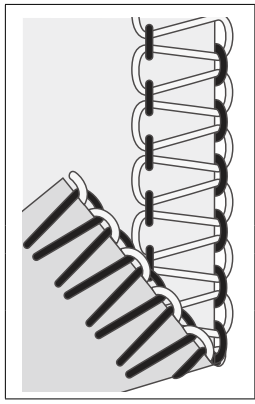

2–Thread Overedge, Wide (and Narrow)

For overcasting a single layer of light to medium weight fabrics (2-thread overlock converter required).

Note: Use the right needle instead for a narrow stitch. Recommended thread tension settings within brackets in the chart.

			NORM/ TIGHT	N/R		THREAD TENSION							
Left	1.0	2~3	NORM	N	Yes	0	(–)	–	(0)	–	(–)	9	(9)

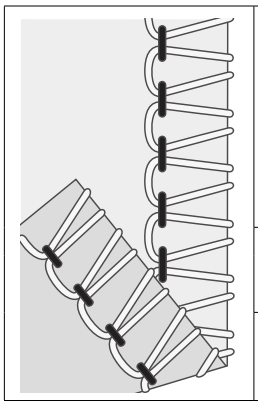

2–Thread Wrapped Overlock, Wide (and Narrow)

Gives a beautiful finish to lightweight fabrics (2-thread overlock converter required).

Note: Use the right needle instead for a narrow stitch. Recommended cut width and thread tension settings within brackets in the chart.

			NORM/ TIGHT	N/R		THREAD TENSION							
Left	1.0	2~3	NORM	N	Yes	4~6	(–)	–	(5~7)	–	(–)	1-3	(4~6)

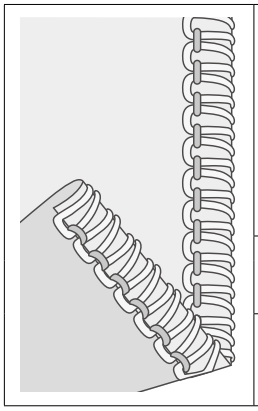

2–Thread Rolled Edge

For edging lightweight fabrics. It gives a nice finish on silky scarves, pillow ruffles and napkins. Thread the looper with a decorative lightweight thread, such as 40 weight rayon for a beautiful satin edge (2-thread overlock converter required).

Note: Not recommended for heavy weight fabrics.

			NORM/ TIGHT	N/R		THREAD TENSION			
Right	1.0	R	NORM	R	Yes	-	5	-	(4~6)

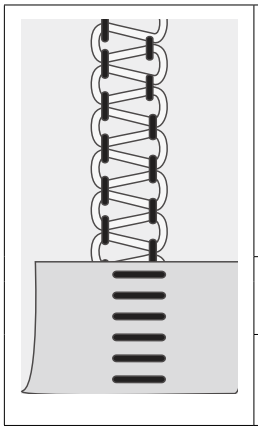

2–Thread Flatlock

For sewing stretchy fabrics together with a decorative effect either with the flatlock side or the ladder stitch side. Create varying effects by threading the loopers with decorative thread. (2-thread overlock converter required)

			NORM/ TIGHT	N/R		THREAD TENSION			
Left	1.0	3-4	NORM	N	Yes	0-1	-	-	6-9

Start Sewing

When the machine is completely threaded, close the front cover and bring all of the threads over the stitch plate and slightly to the left under the presser foot.

Ensure that the upper cutter moves against the stationary cutter correctly by turning the hand wheel slowly toward you. If the upper cutter blade does not move correctly, check if there are any fabric or waste thread stuck between the blades.

Hold the threads and apply a slight tension.

Turn the hand wheel toward you 2 or 3 complete turns to start making a thread chain. Check if all threads wind around the stitch finger of the stitch plate. If the threads do not wind around the finger, make sure each thread is threaded correctly.

A. Continue holding the thread chain while pressing the foot control. Sew until the chain is 2″-3″ (5-8cm) long.

   Place fabric under the front of the presser foot and sew a test sample. Guide the fabric slightly with your left hand while sewing. Do not pull on the fabric as this may deflect the needle, causing it to break.

B. When you reach the end of the fabric, continue sewing while drawing the finished fabric gently backwards and to the left. This is called chaining off. It prevents the threads from coming undone and prepares for next sewing.

C. Cut the threads with the thread cutter as illustrated, leaving a thread chain approximately 2″-3″ (5-8cm) long at the end of the fabric.

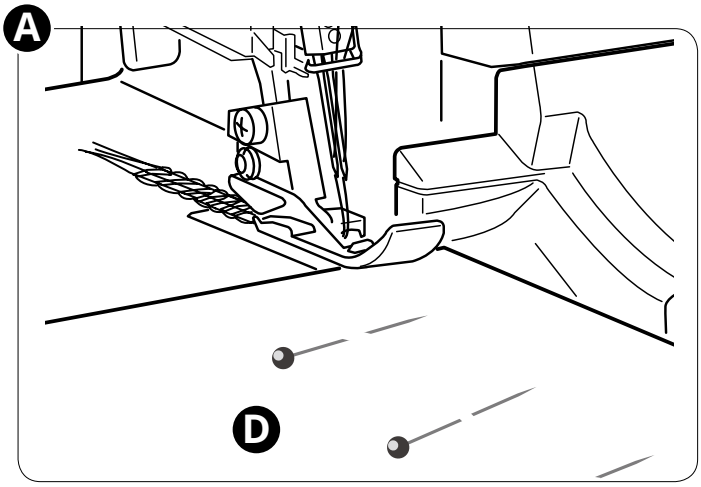

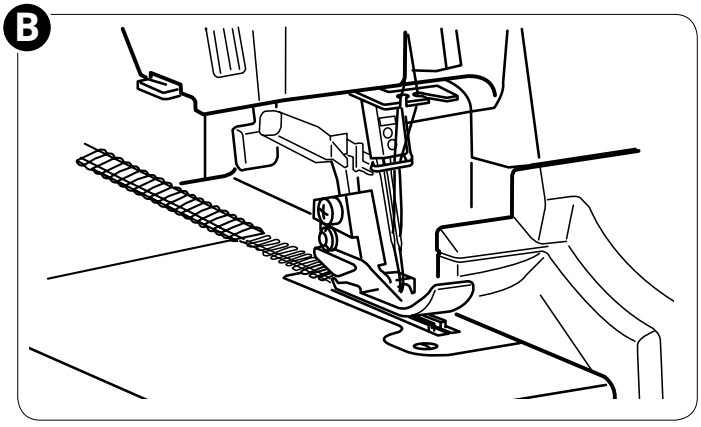

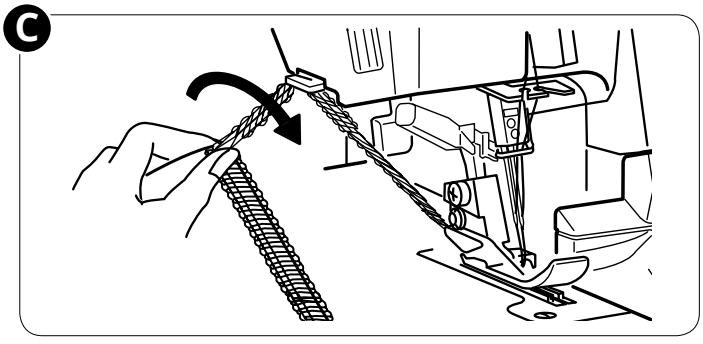

Pin Placement (D)

Insert straight pins to the left of the presser foot. The pins will be easy to remove and are away from the cutters.

⚠ *Sewing over pins will damage and might destroy the edge of the cutters.*

Using Guide Lines

The guide lines on the top of the front cover help you to position the fabric while sewing. The numbers/lines indicate the distance from the right needle position in inches.

The cutting width between the right needle position and the upper cutter when in the standard position is 3.5 mm.

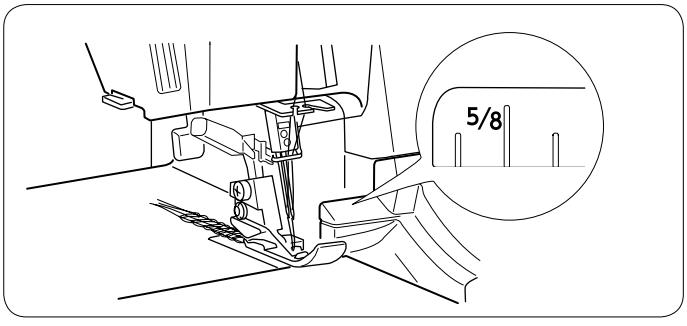

Securing the Thread Chain

Tie a Knot (A)

To avoid the thread chain from ravelling, separate and tie the thread ends together.

Use a Sewing Needle (B)

1. Thread the chain into a large eyed, hand sewing needle.
2. Insert the needle into the end of the seam and pull the chain into the seam to secure the threads.

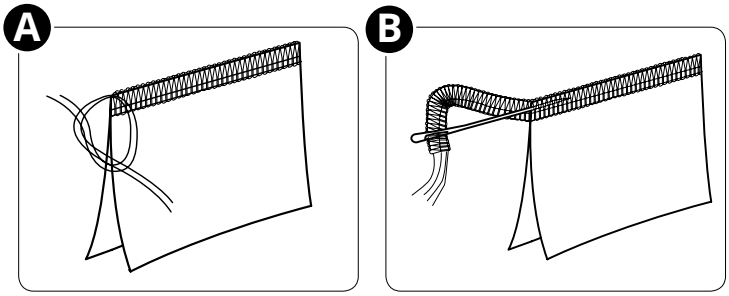

Use the Machine at the Start of a Seam (C)

1. Before placing the fabric in the machine, sew a thread chain approximately 2″-3″ (5-8cm) long.
2. Place your fabric in front of the presser foot. Sew a few stitches and stop.
3. Raise the presser foot and bring the thread chain to the left around and under the presser foot.
4. Place the thread chain between the presser foot and upper knife, holding it in position as you lower the presser foot to sew.
5. After sewing approximately 1˝ (2.5 cm), move the chain to the right and under the upper knife, cutting the chain as you sew.

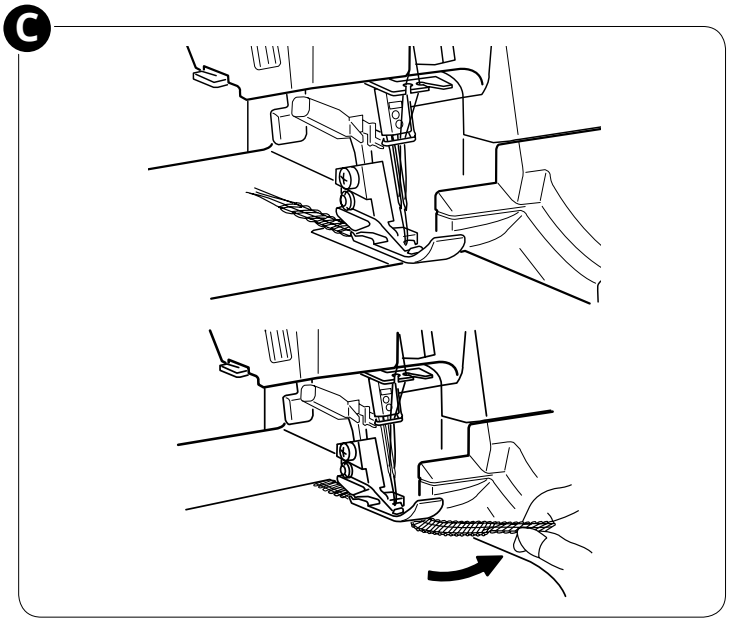

Use the Machine at the End of a Seam (D)

1. Serge one stitch off the end of the seam.
2. Raise the needle and presser foot, and gently pull the threads off the stitch finger.
3. Turn the fabric over so that the under side is up.
4. Serge approximately 1˝ (2.5cm) over the stitching and angle off the fabric.

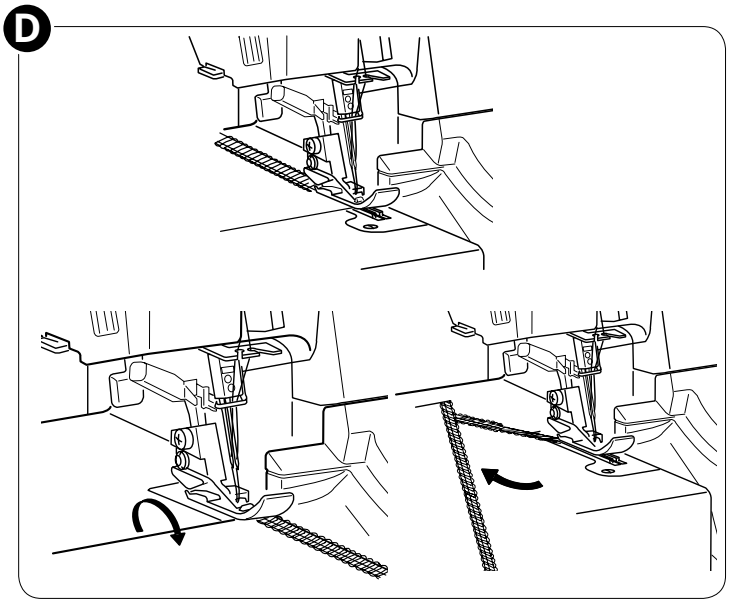

Cutting the Seams Open

Cut the upper looper thread with a seam ripper (not included with the machine) to cut the seams.

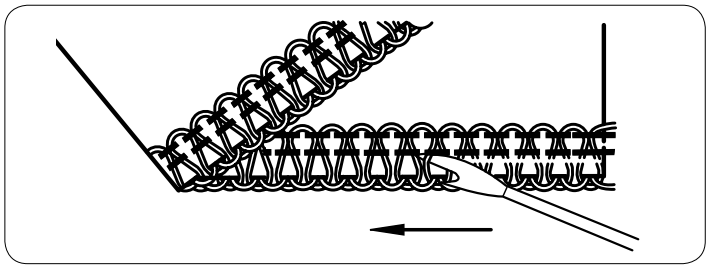

Gathering Using the Differential Feed

The differental feed can be used to gather lightweight fabrics. Use it for sleeves, making ruffles, and more.

Set the differential feed between 1.5 and 2 to obtain the best gathering effect for your project. Always test sew on a scrap piece of your fabric first. See section "Differential Feed Adjustment", page 25, to learn how to adjust the differential feed.

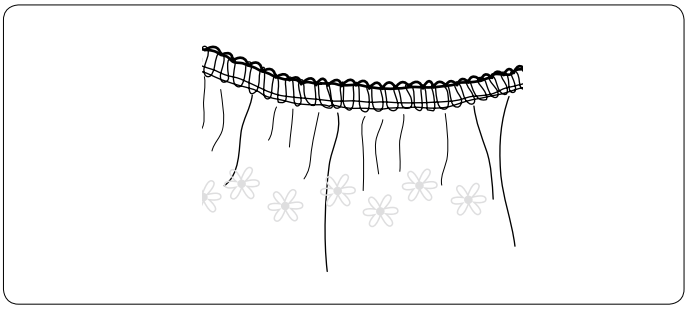

Rolled Edge Sewing

The rolled edge stitch is appropriate for light weight fabrics such as lawn, voile, organdy, crepe, etc. The rolled edge is achieved by adjusting the thread tension to make the fabric edge roll under the fabric while overlocking. Adjust the thread tension to change the degree of rolling. To sew rolled edge you need to set the stitch finger lever to "R".

Tip: For a beautiful rolled edge, thread the upper looper with a decorative thread and the needle and lower looper with lightweight regular thread.

2-Thread Rolled Edge (A)

1. Engage the 2-thread overlock converter (see page 11).
2. Use the right needle thread and lower looper thread.
3. Move the stitch finger lever to "R".
4. Set the stitch length dial to "R" for a fine seam.
5. Set the thread tension according to the stitch table on page 31.
6. Make a thread chain and test sew on a sample of your fabric before sewing on your project. Hold the thread chain while beginning to sew to keep it from curling into the seam.

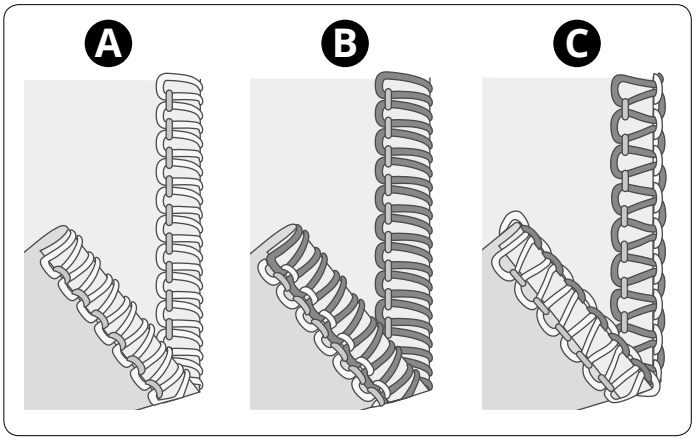

3-Thread Rolled Edge (B) / Narrow Edge (C)

A variant of the rolled edge stitch (B) is the narrow edge (C). It can be obtained by adjusting the thread tension according to the stitch table on page 29.

1. Use the right needle thread and the upper and lower looper threads.
2. Move the stitch finger lever to "R".
3. Set the stitch length dial to "3-2" for a fine seam.
4. Set the thread tension according to the stitch table on pages 29.
5. Make a thread chain and test sew on a sample of your fabric before sewing on your project. Hold the thread chain while beginning to sew to keep it from curling into the seam.

Flatlock Sewing

A Flatlock (A) is made by adjusting the tension of the 3-thread overlock stitch, sewing the seam and pulling the fabrics apart to flatten the seam. The tensions must be adjusted correctly for the fabric to pull flat properly.

A Flatlock can be used both as a decorative construction stitch, sewing two pieces together (Standard Flatlock), or for decoration only on one piece of fabric (Decorative Flatlock).

There are two ways to sew a Flatlock. Either with the wrong sides of the fabric together to create a decorative look, or with the right sides together, to create a Ladder Stitch.

Standard Flatlock, Wide (B)

1. Use the left needle.
2. Thread the lower and upper looper and the left needle.
3. Set the thread tension according to the stitch table on page 30.
4. Place the wrong sides of the two pieces of fabric together to sew a decorative stitch on the right side of the project.
5. Sew the seam, trimming the excess fabric. The needle thread will form a V on the underside of the fabric. The lower looper thread will pull into a straight line at the fabric edge.
6. Unfold the fabric and pull on opposite sides of the seam to pull the stitches flat.

Decorative Flatlock, Wide (C)

1. Place the upper cutter in the nonworking position. The fabric should not be trimmed on this stitch.
2. Follow steps 1-3 above.
3. Fold the fabric piece, wrong sides together, to sew a decorative stitch on the right side of the project.
4. Position the fabric so the seam is sewn with part of the stitch extending off the fabric.
5. Unfold the fabric and pull on opposite sides of the stitch to flatten.

Tip: The upper looper thread is the prominent thread in the flatlock stitch. Place a decorative thread in the upper looper and regular threads in the lower looper and needle.

Ladder Stitch (D)

A ladder stitch is a flatlock stitch but sewn with the right sides of the fabric together. The needle thread will be the prominent thread that creates the ladder.

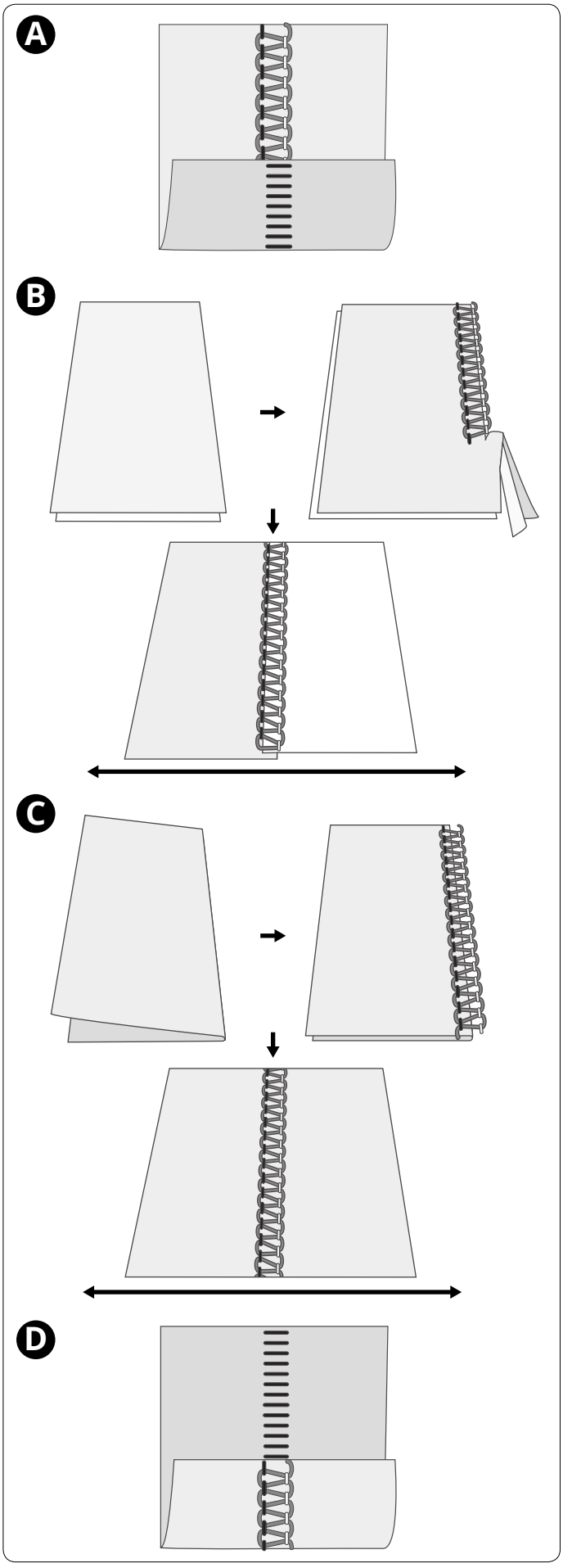

Sewing Corners

Outer Corners

Trim three of the corners approximately 1¼″ (3cm) as illustrated (A). Start sewing at the corner that is not trimmed.

When you reach a corner, stop the machine. Raise the needle and the presser foot. Remove the threads from the stitch finger. Turn the fabric and align the cutting line with the upper knife (B).

Lower the presser foot lifter. Continue to sew from where the previous stitches on the corner ended.

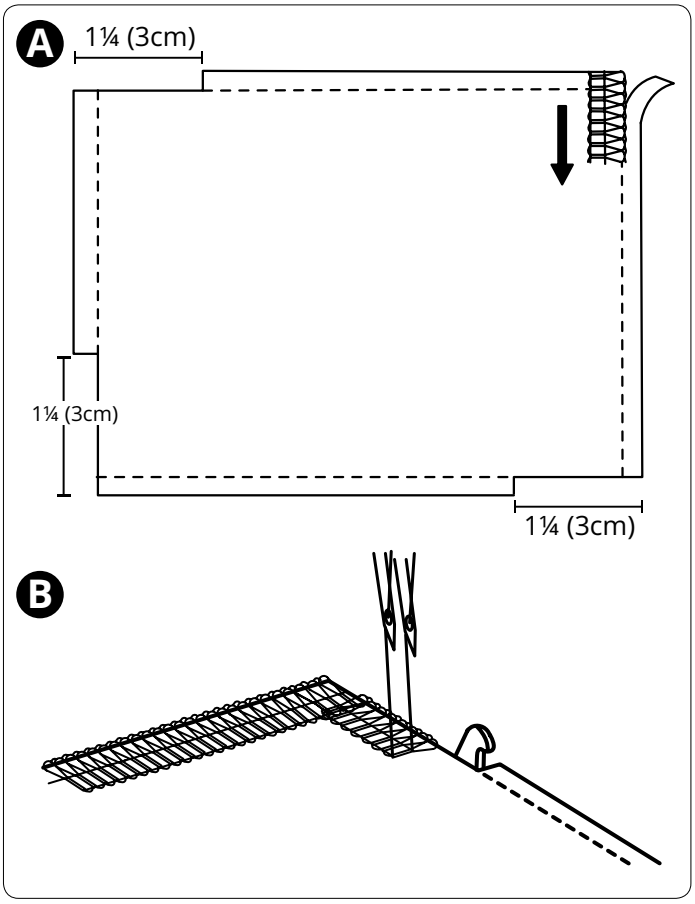

Inner Corners

Cut the inner corner as illustrated (A). Sew and stop approximately 1¼″ (3 cm) before the inner corner.

Turn the fabric so that the cutting lines are straight (B).

Continue sewing.

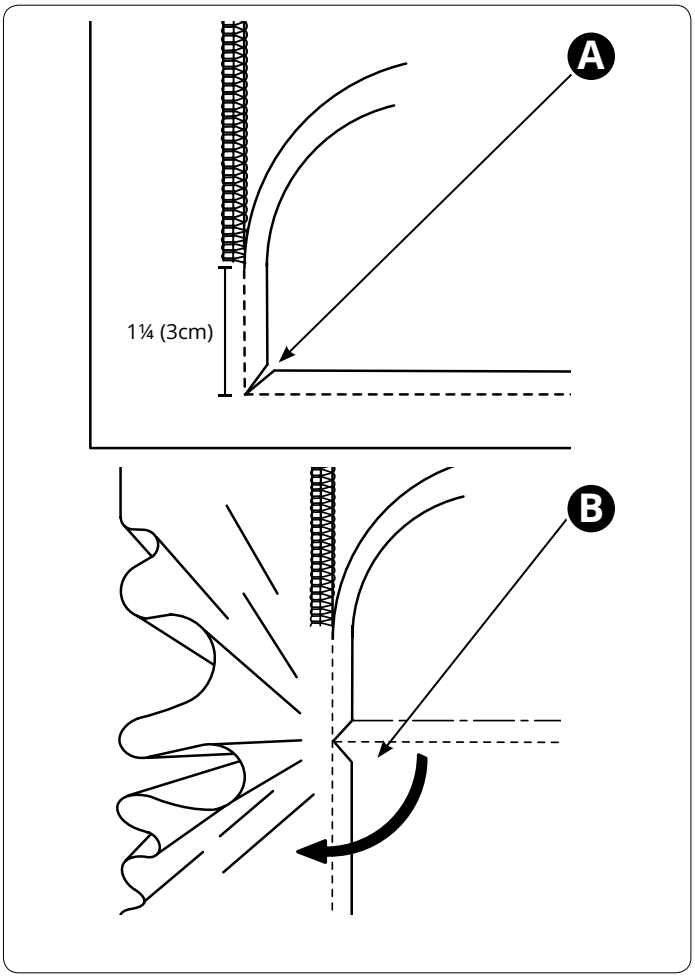

MACHINE MAINTENANCE

An overlock requires more frequent maintenance than a conventional sewing machine for two reasons:

- A lot of lint is produced when the cutters are cutting the fabric.
- An overlock runs at a very high speed and needs to be oiled frequently to lubricate the internal working parts.

Storage

When the machine is not in use, be sure to keep it unplugged. Store the machine, so it is not exposed to direct sunlight or humidity.

Servicing

If you have any questions regarding service and/or operation, contact our Customer Care department.

Cleaning the Upper Cutter Area

⚠ *Turn off the main power switch and unplug the machine.*

Open the front cover.

With a forward brushing movement, use the lint brush to remove any lint.

Note: You may use a vacuum cleaner to clean the upper knife area or feed teeth.

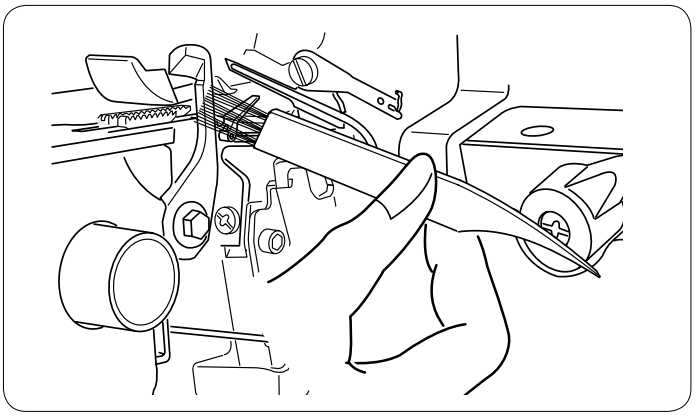

Cleaning the Feed Teeth

⚠ *Turn off the main power switch and unplug the machine.*

Deactivate the stitch finger by setting it in "R" position (A).

Open the side and front covers.

Remove the needle(s) and the presser foot.

Remove the set screw (B) with the large screw driver. Remove the needle plate.

Use the lint brush to remove any lint from around the feed teeth (C).

Place the stitch plate over the feed teeth, making sure the tab of the stitch plate (D) is inserted under the edge of the cover (E). The hole in the stitch plate (F) should align with the knob on the machine (G).

Replace and tighten the set screw.

Attach the needle(s) and the presser foot.

Close the side and front covers.

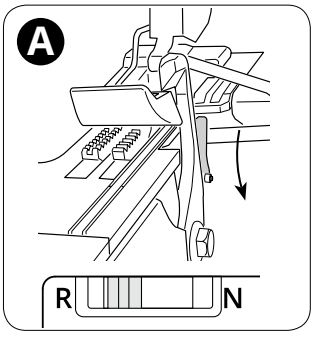

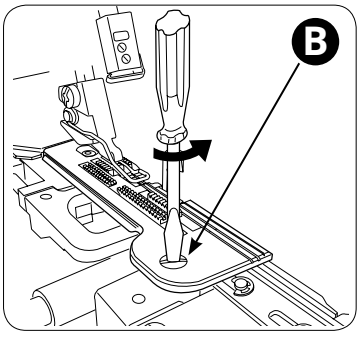

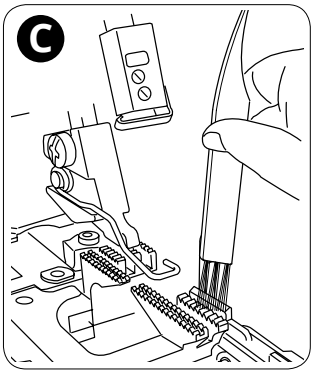

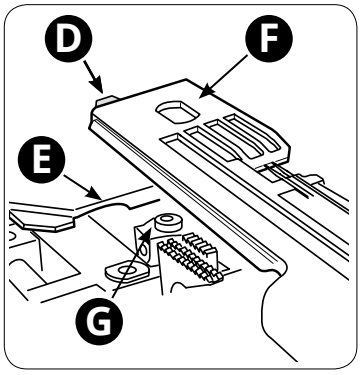

Cleaning the Looper Threader Pipe

⚠ *Turn off the main power switch and unplug the machine.*

Use the looper threading wire to clean the pipe of the looper threader device.

Set the Threading/Sewing switch to “Threading” position (A) by turning it to the right.

Turn the handwheel slowly toward you until the mark on the wheel matches the mark on the cover (B). The hand wheel will click and is locked in threading position.

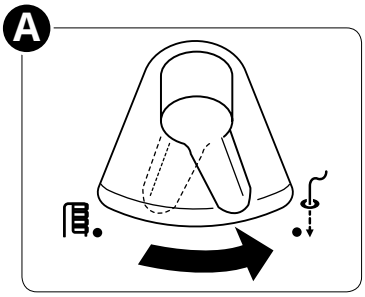

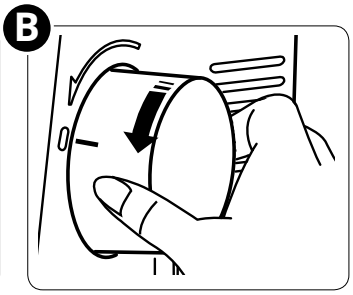

Take the looper threading wire and push the straight end (not the loop end) through the looper threader hole until it comes out from the the hole of the looper tip (C).

Use a 60wt thread about 24” (60cm) long to clean the looper threader pipes. Pass the thread through the loop of the looper threading wire until the loop is at the halfway point of the thread (D).

Carefully pull the end of the looper threading wire until the thread comes out from the hole of the looper tip.

Pull the thread until it is all the way through the threader pipe.

Repeat the above procedure 2-3 times.

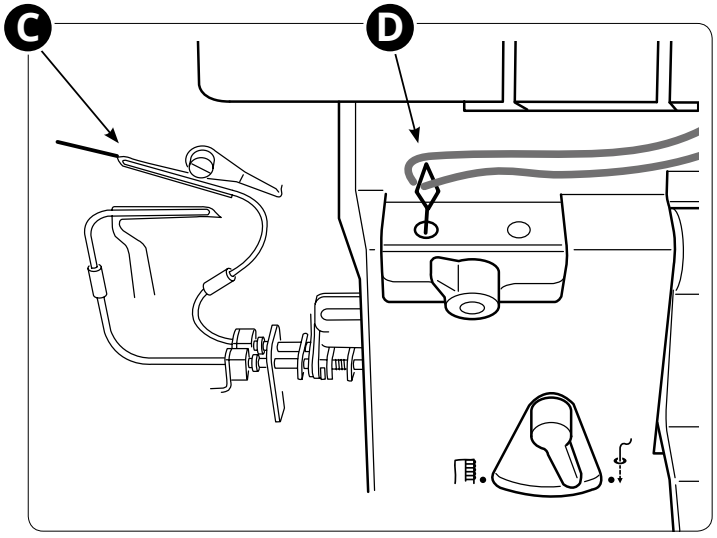

With the machine unthreaded, raise and lower the looper threader lever 4-5 times to clean out the remaining lint (E).

Set the Threading/Sewing switch to “Sewing” position (F).

Close the front cover.

Note:

- *Clean the looper threader pipe once every 10 hours of use or when the looper threader does not work well.*
- *You can also use an compressed air duster or camera dust blower to clean the looper threader pipe.*

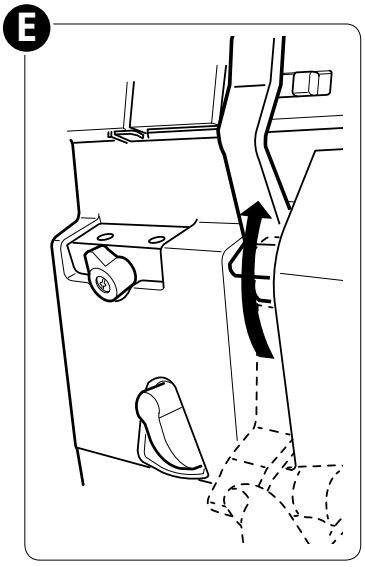

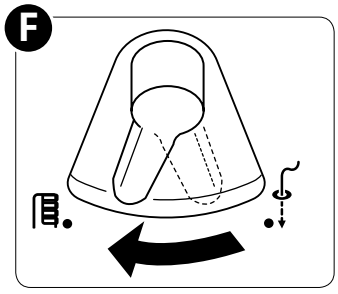

Oiling the Machine

⚠ *Turn off the main power switch and unplug the machine.*

To keep the machine running smoothly and quietly the moving parts, pointed out in the picture, must be lubricated often. We recommend lubricating once a week for normal use or once every 10 hours of continuous use.

Use sewing machine oil. Do not use any other oil, it could damage the machine.

With the machine unthreaded, place a scrap of fabric under the presser foot and run the machine for a few minutes.

Wipe the machine surface to remove all excess oil before sewing.

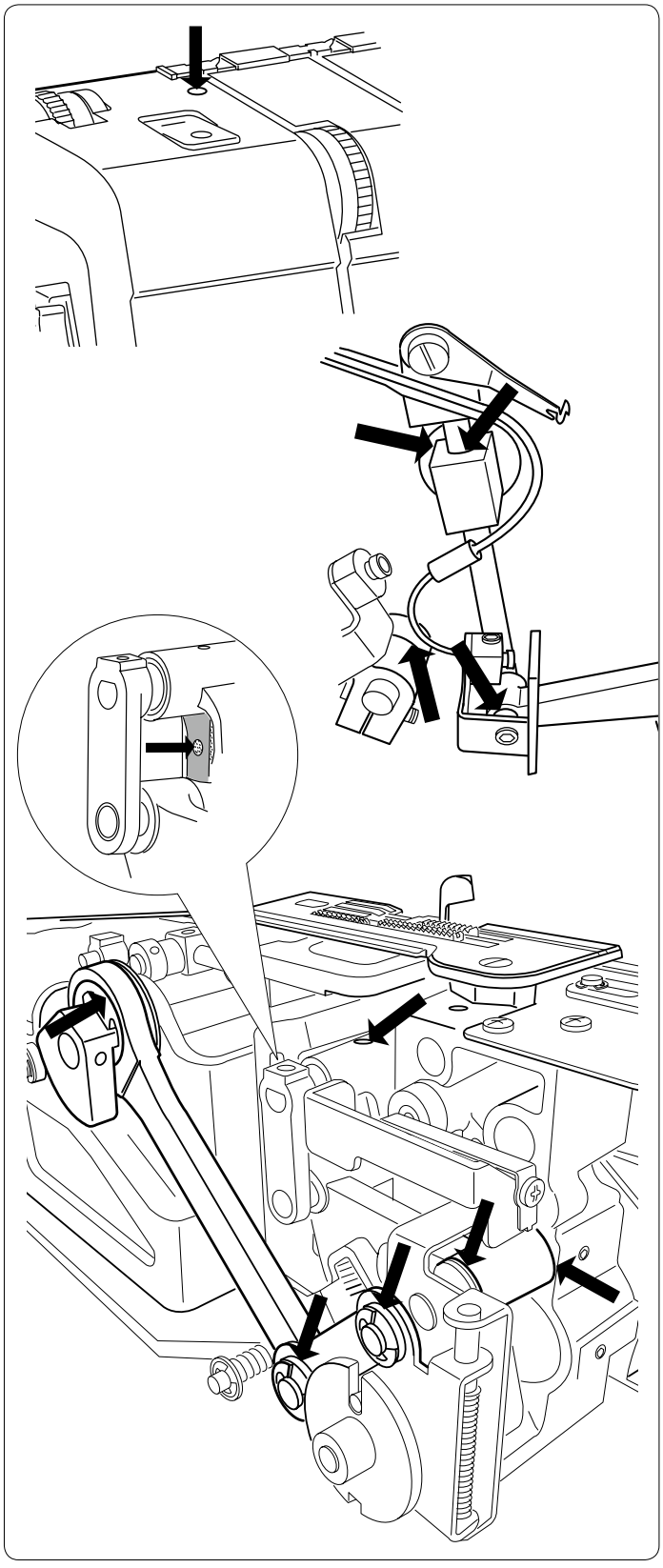

⃠ Caution when Oiling

Never inject oil into the looper threader holes, the upper looper tip, or the lower looper tip.

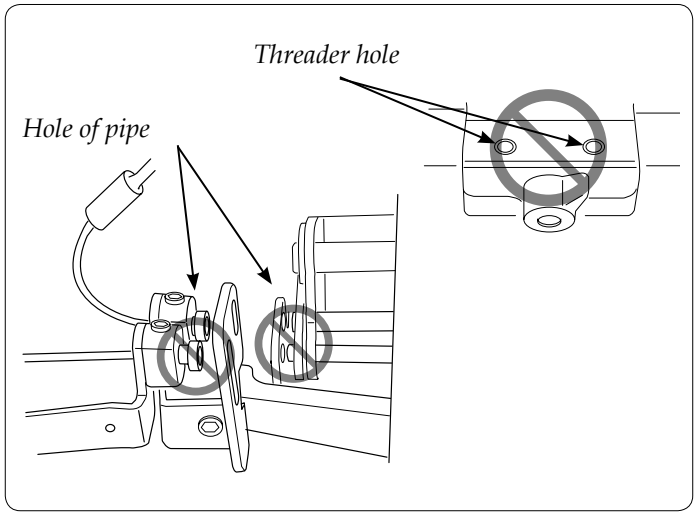

Replacing the Upper Cutter

⚠ *Turn off the main power switch and unplug the machine.*

The upper cutter should be changed when it becomes blunt. Change it by following the below instructions. If you are having any difficulties, have a service technician make the necessary adjustments.

- Open the front cover.
- Place the upper cutter in its highest position.
- Loosen the upper cutter set screw (A) with the double-ended wrench (use the small end) and remove the upper cutter (B).
- Place a new upper cutter to the upper cutter holder (C)
- Tighten the upper cutter set screw (A) partially.
- Place the upper cutter in its lowest position.
- Adjust the position of the upper cutter until the front edge of the upper cutter is approx 1-1.2mm lower than the cutting edge of the stationary cutter (D).
- Tighten the upper cutter set screw (A) completely.

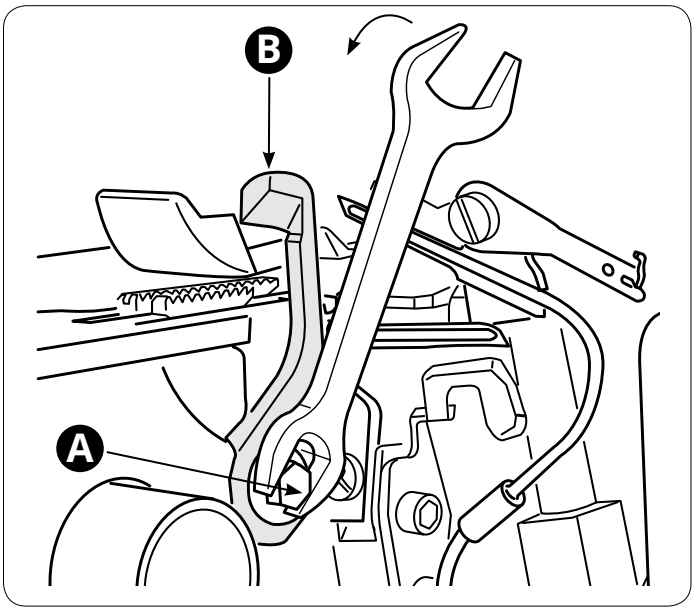

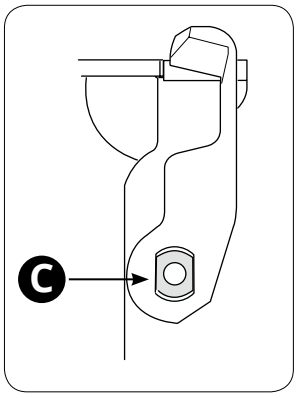

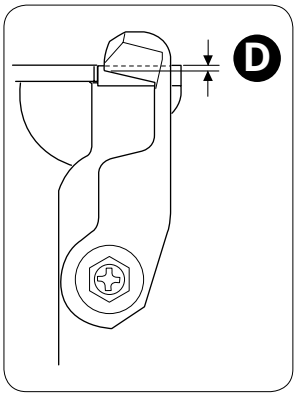

Troubleshooting

Machine Does not Run

Possible Cause: Machine not properly connected to power source.
Solution: *Check that machine has been properly connected to power source (page 7).*
Possible Cause: The safety device is activated.
Solution: *Close open covers (page 8).*

Fabric Does not Feed Well

Possible Cause: Stitch Length is set too short for the fabric being sewn.
Solution: *Increase the stitch length setting (page 26).*
Possible Cause: Differential Feed is not set in the correct position for the fabric being sewn.
Solution: *Adjust the Differential Feed (page 25).*
Possible Cause: Presser foot pressure is not correctly set for fabric being sewn.
Solution: *Adjust presser foot pressure (page 25).*

Irregular Trimming

Possible Cause: Upper cutter is not in proper position.
Solution: *Check alignment of cutters (page 40).*
Possible Cause: Cutter is damaged or worn out.
Solution: *Replace the upper cutter (page 40).*

Fabric Puckers

Possible Cause: Thread tensions are set too tightly.

Solution: *Loosen thread tensions (page 27).*

Possible Cause: Thread is not unreeling smoothly off the thread spool.

Solution: *Check the thread spool to ensure thread is not getting caught.*

Possible Cause: Using thread that is poor quality or has uneven filament.

Solution: *Use good quality thread with a smooth, even filament.*

Possible Cause: Stitch length is set too short.

Solution: *Adjust stitch length to a longer setting (page 26).*

Possible Cause: Differential Feed is not set in the correct position for the fabric being sewn.

Solution: *Adjust the Differential Feed (page 25).*

Needle Breaks

Possible Cause: Needle may not be properly seated in the needle clamp.

Solution: *Insert needle so that it is all the way up in the needle clamp, then tighten the screw securely (page 10).*

Possible Cause: Manually pulling fabric from behind presser foot while sewing which causes needles to deflect.

Solution: *Refrain from pulling fabric manually; allow feed teeth to draw fabric under presser foot.*

Possible Cause: Needle may not be the correct size for the fabric being sewn.

Solution: *Use a needle size that is compatible for the fabric (page 12).*

Thread Breaks

Possible Cause: Machine may not be threaded correctly.

Solution: *Check that machine is threaded in correctly as shown in machine manual (page 14-23).*

Possible Cause: Thread is not unreeling smoothly off the thread spool.

***Solution*:** *Check the thread spool to ensure thread is not getting caught.*

Possible Cause: Needle(s) may have a bent, dull or broken point.

***Solution*:** *Replace needle(s) (page 10).*

Possible Cause: The needle is inserted incorrectly

***Solution*:** *Insert the needle correctly (page 10).*

Possible Cause: Using thread that is poor quality or has uneven filament.

***Solution*:** *Use good quality thread with a smooth, even filament.*

Possible Cause: Thread tension is set too tight.

***Solution*:** *Loosen thread tension (page 27).*

Possible Cause: Thread is caught in one of the thread guides.

***Solution*:** *Check threading path to ensure all threads are feeding smoothly.*

Stitches Skipping

Possible Cause: Needle(s) may have a bent, dull or broken point.

Solution: *Replace needle(s) (page 10).*

Possible Cause: Needle may not be properly seated in the needle clamp.

Solution: *Insert needle so that it is all the way up in the needle clamp, then tighten the screw securely (page 10).*

Possible Cause: Needle may not be the correct size for the fabric being sewn.

Solution: *Use a needle size that is compatible for the fabric (page 12).*

Possible Cause: Machine may not be threaded correctly.

Solution: *Check that machine is threaded in correctly as shown in machine manual (page 14-23).*

Possible Cause: Using thread that is poor quality or has uneven filament.

Solution: *Use good quality thread with a smooth, even filament.*

Irregular Stitches

Possible Cause: Stitches are not balanced.
Solution: *Adjust thread tensions and possibly cutting width (page 26,* 27)
Possible Cause: Thread is not unreeling smoothly off the thread spool.
Solution: *Check the thread spool to ensure thread is not getting* caught.
Possible Cause: Machine may not be threaded correctly or threads threaded in the incorrect sequence.
Solution: *Check that machine is threaded in correct order as shown in machine manual (page 12)*

Fabric Jams

Possible Cause: Upper and lower fabric cutters are not in proper position.
Solution: *Check alignment of cutters (page 26).*
Possible Cause: Thread is not unreeling smoothly off the thread spool.
Solution: *Check the thread spool to ensure thread is not getting caught.*
Possible Cause: Too much fabric thickness.
Solution: *Compress thick layers with conventional sewing machine before sewing on overlock.*

The Looper Threader does not Work

Possible Cause: The Threading/Sewing switch is not set to the "Threading" position.
Solution: *Set the Threading/Sewing switch to threading position (page 15, 17).*
Possible Cause: The looper selection lever is not set correctly.
Solution: *Make sure the looper selection lever is pointing to the correct looper (page 15, 17).*
Possible Cause: The thread is not correctly inserted into the looper threader hole.
Solution: *Insert at least 2cm of thread into the looper hole (page 15, 17).*
Possible Cause: The thread is not long enough.
Solution: *Pull out approximately 12" (30 cm) of thread before putting it in the looper threading hole (page 15, 17).*
Possible Cause: The thread is tangled, wet or frayed.
Solution: *Trim the thread end.*
Possible Cause: Lint is accumulated in the looper threader pipe.
Solution: *Clean the looper threading pipe (page 38).*

The Needle Threader does not Work

Possible Cause: The mark on the side cover is not aligned with the mark on the handwheel.
Solution: *Set the handwheel in threading position (page 8, 15, 17).*
Possible Cause: The needle threader switch is not set correctly.
Solution: *Set the needle threader switch to "R" when threading the right needle and "L" when threading the left needle (page 24).*
Possible Cause: The needle threader is not used correctly.
Solution: *See page 24 for instructions on how to use the needle threader.*

Specifications

Sewing Speed
Maximum 1300 rpm

Number of Needles/Needles
1-2 of type HAx1SP, size: #11-14

Stitch Length
1-5 mm

Stitch Width
3.3-7.5 mm

Number of Threads
2, 3, 4

Differential Feed Ratio
0.5-2.0

Type of Lamp
LED light

Needle Bar Stroke
26.5 mm

Machine Dimensions
Width: 351 mm
Depth: 284 mm
Height: 299 mm

Presser Foot Rise
5-7 mm

Weight
7.8 kg

www.pfaff.com

4710584-26D © 2019 KSIN Luxembourg II, S.a.r.l. All rights reserved.