AXOR

hansgrohe

AXOR One
Hand shower 2jet
Surfaces: **polished redgold** Art. no. : **45720300**

Description

product features

- Spray pattern: normal spray, flood spray
- Select button to comfortably switch between spray modes
- Maximum flow rate (at 3 bar): 12 l/min
- minimum flow pressure: 2,4 bar
- with internal water conduction
- rinseable screen seal
- Connection thread ½"
- not recommended for rim-/ tile-mounted mixers
- operation pressure: min. 2.5 / max. 6 bar
- WRAS 1910325
- WRAS 1910325
- Kiwa UK 1910725

Article Details

Price excl. VAT	£ 266.30

Technology

Select SELECT

Quick Clean

Certificates

kiwa

WRAS APPROVED PRODUCT

Product image

Scale drawing

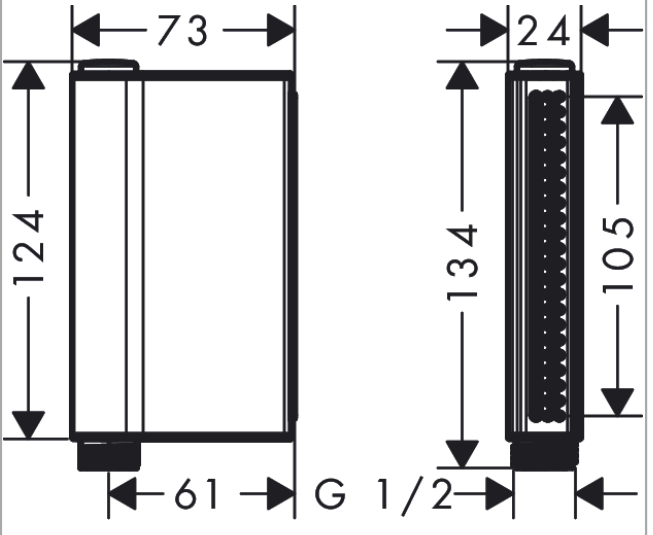

Flowchart

① Normal spray
② Wide flood jet