Barkan
a better point of view™

Assembly instructions and user manual

landscape-portrait rotation TV Mount

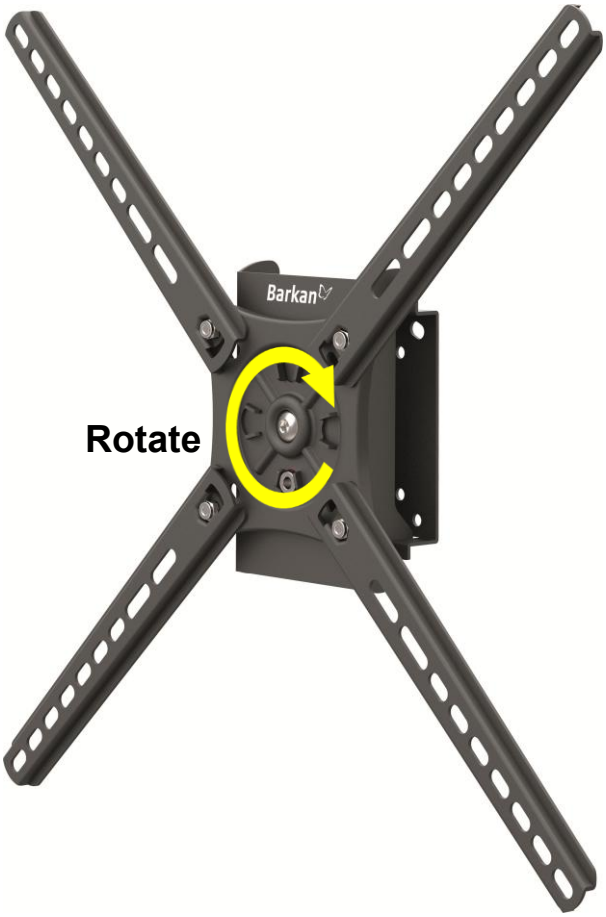

OVER 35 YEARS OF INNOVATION
Barkan
a better point of view™

Download Assembly Instructions with Text

For more information: **barkanmounts.com**

If you are satisfied with the product, please give us a 5 stars ☆☆☆☆☆ rating on the website you bought it from. If you are not satisfied, please contact us at https://www.barkanmounts.com/support and we will solve the problem for you.

TV Size	TV Weight	
13”-65”	US (Max)	EU
	80lbs	36kg

Also fits screens up to 77” with 400X400mm VESA connections

0-15

Safety instructions and installation warnings (provided separately) must be read in full, prior to assembly.

Included Parts not to scale

A Rotation Mechanism

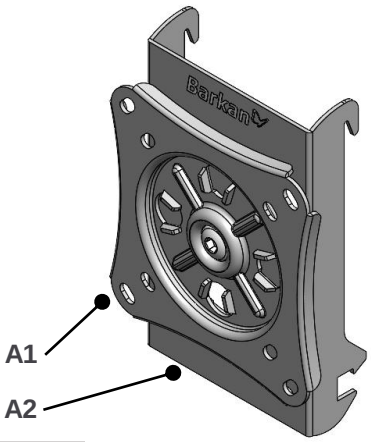

x1

B Adaptor

x4

C Connection Plate

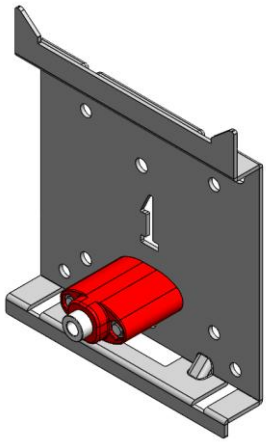

x1

Z5

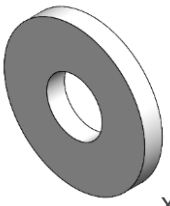

x4

Z7

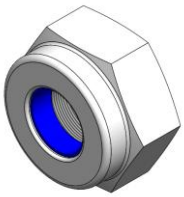

x4

Z8

x4

Z9

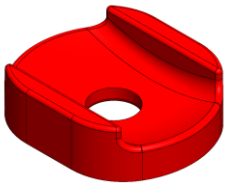

x4

W1

x3

W2

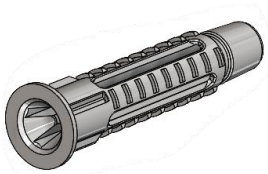

x3

W3

x3

#	M	L mm	L inch	pcs
Z1	4	20	$^3/_4$	4
Z2	6	25	1	4
Z3	8	25	1	4
Z4	8	45	$1^3/_4$	4
Z6	6	12	$^1/_2$	4

Required Tools

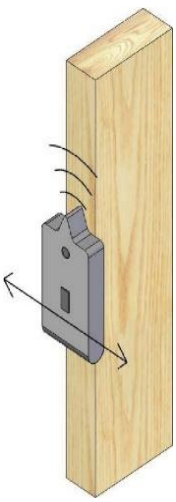

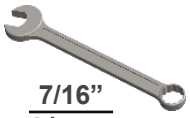

7/16”
11 mm

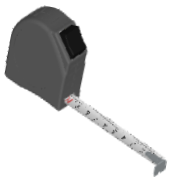

No. 2+3

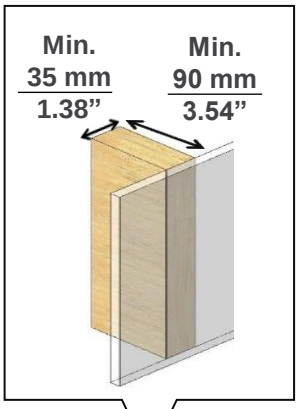

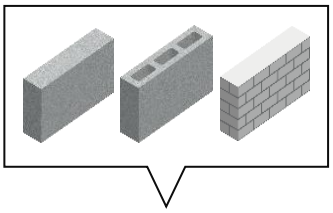

1/4”
6 mm

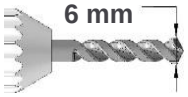

5/32”
4 mm

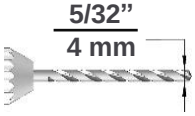

3/8”
10 mm

Connect the rotation mechanism (A) to the back of the TV

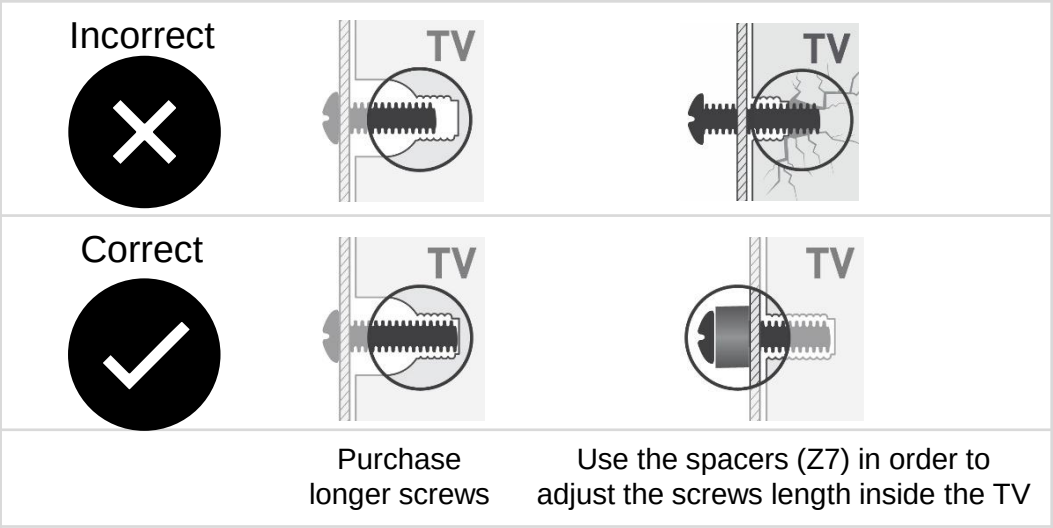

1

Continue according to your TV mounting hole pattern

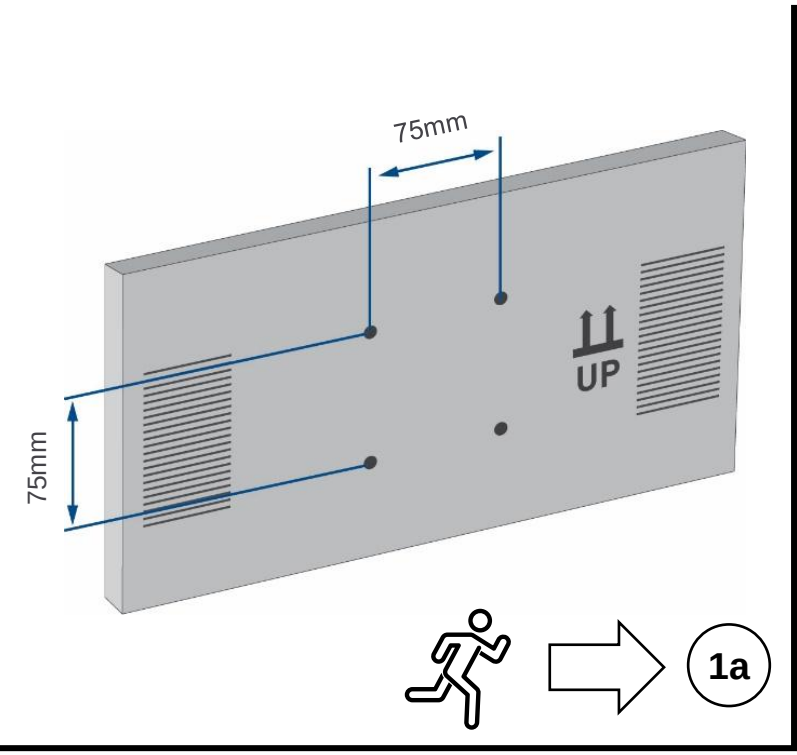

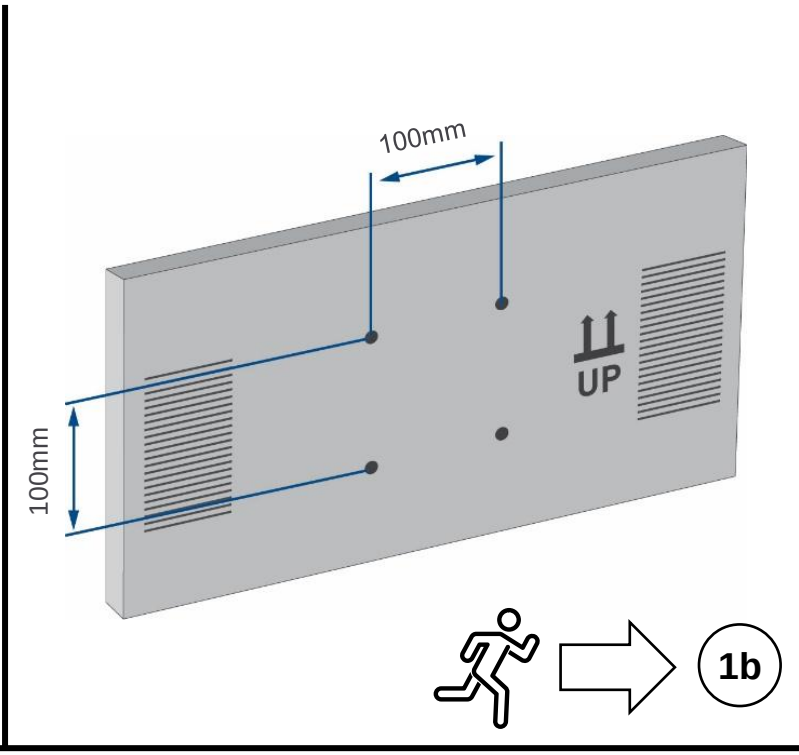

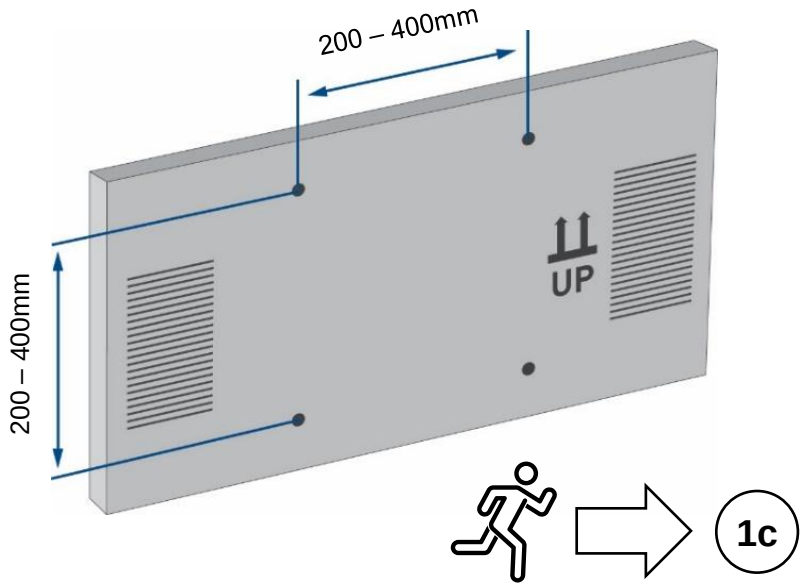

75x75 mm / 100x100 mm TV mounting hole pattern hole pattern -

Place the rotation mechanism (A) so that part A1 is flush against the back of the TV screen

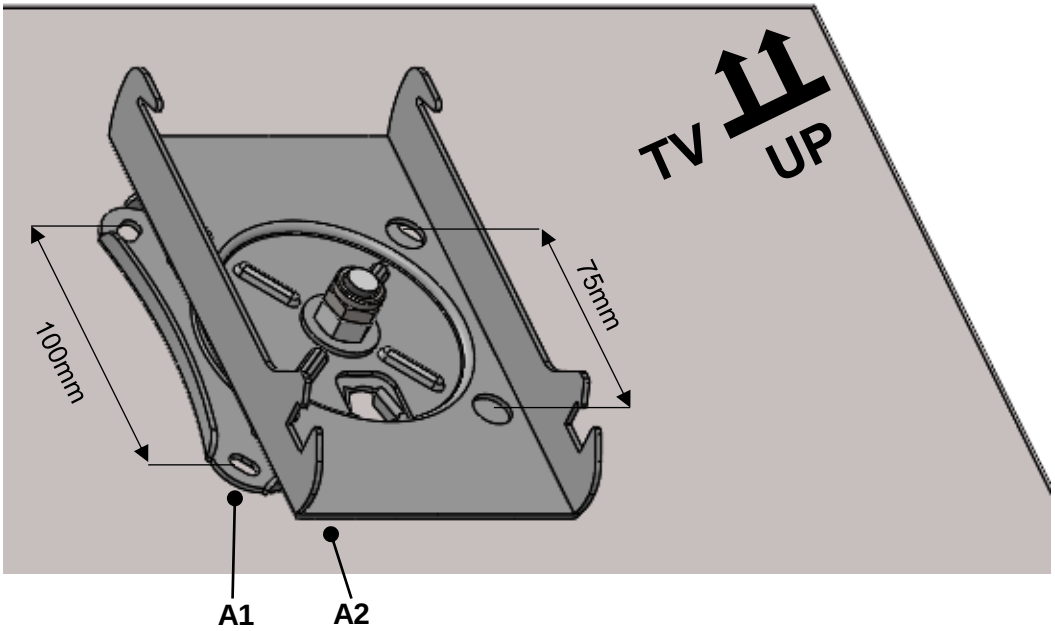

1a 75x75 mm-

I Rotate part A2 and place Z5 washer on the inside oval hole of part A1.
Repeat for all 4 holes

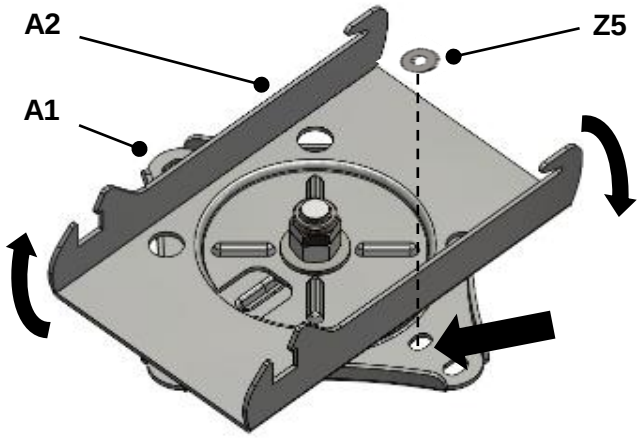

II Screw Z1/Z2 (according to the TV mounting holes size) through the washers into the TV

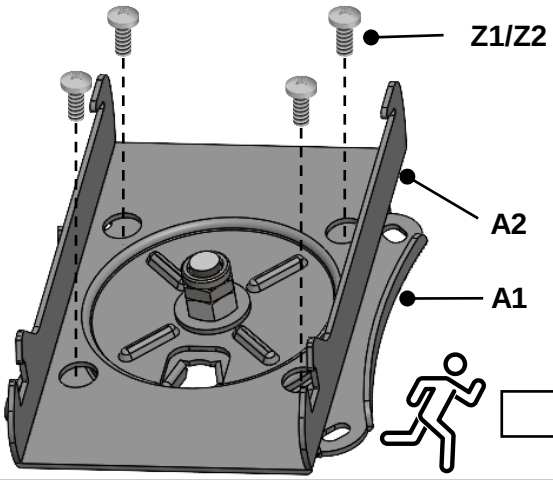

2

1b 100x100 mm-

I Place two Z5 washers on the outside oval holes of part A1 and screw two Z1/Z2 screws (according to the TV mounting holes size) through the washers into the TV

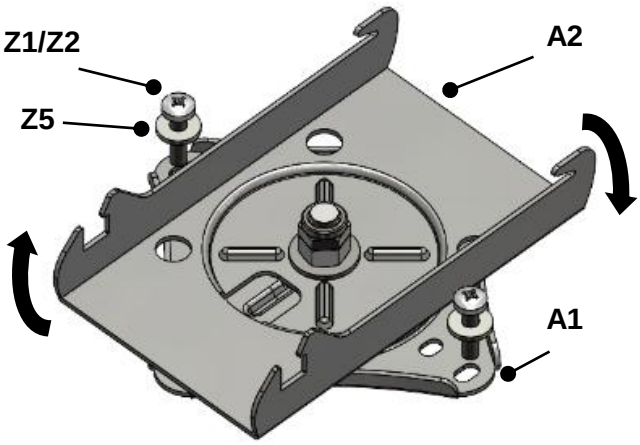

II Repeat for the other 2 screws and washers

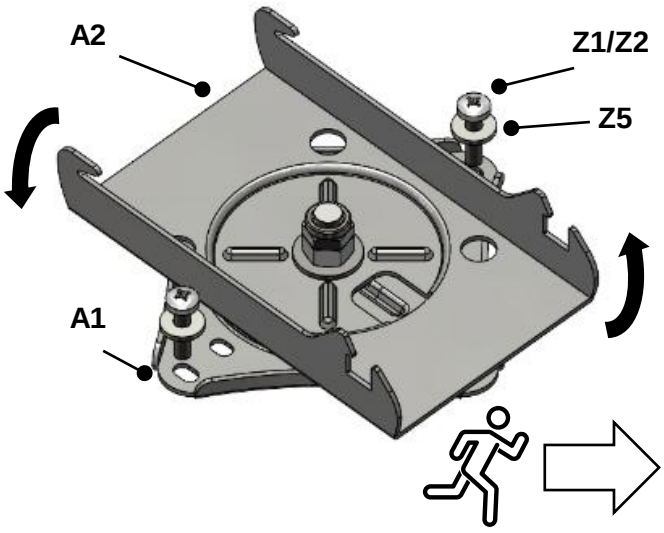

2

1c TV mounting hole pattern of 200x200 mm up to 400x400 mm:

I Disassemble the screws from the adaptors (B)

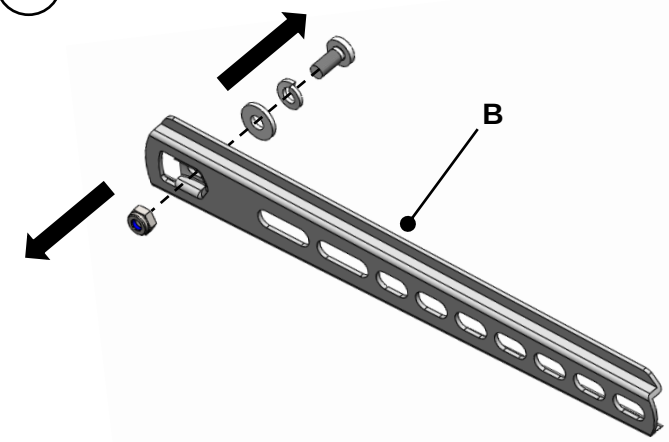

II Rotate part A2 45° relative to part A1

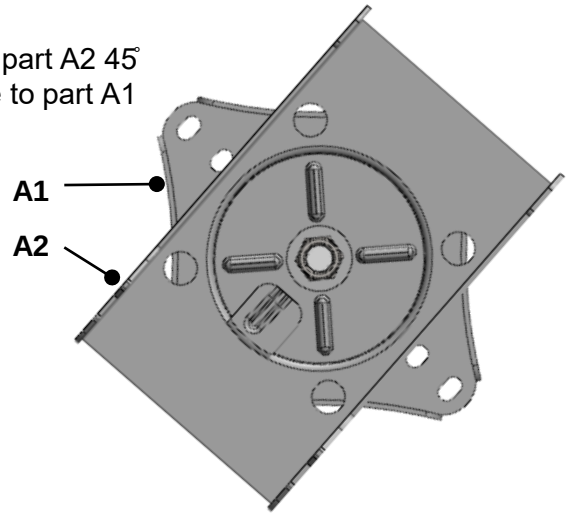

III Connect two adaptors (B) to part A1 and reassemble the screws. Rotate part A2 back and repeat for the two additional adaptors

Continue according to your TV shape

Flat TV

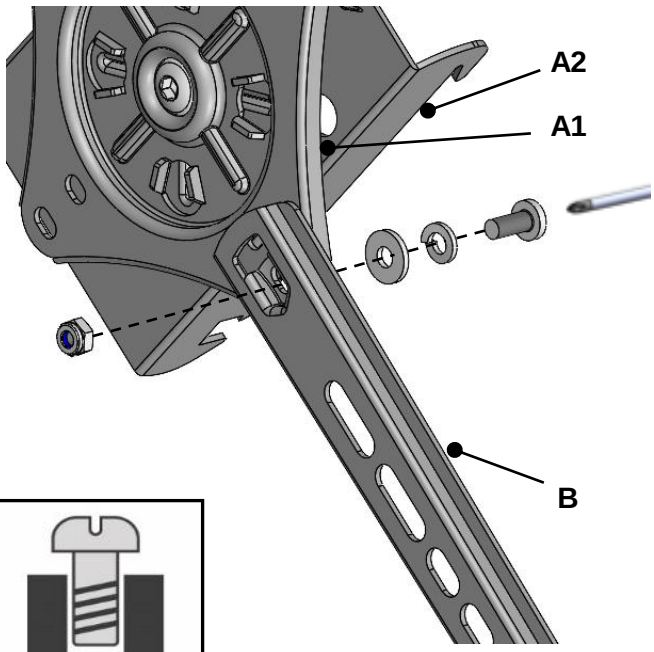

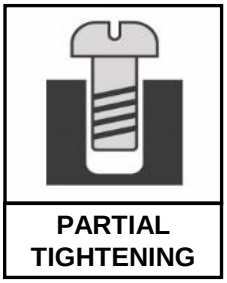

PARTIAL TIGHTENING

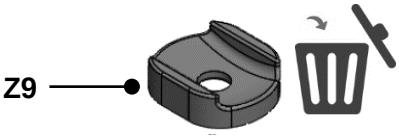

Correct

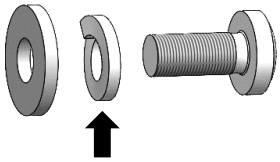

Incorrect

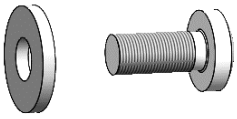

Curved TV

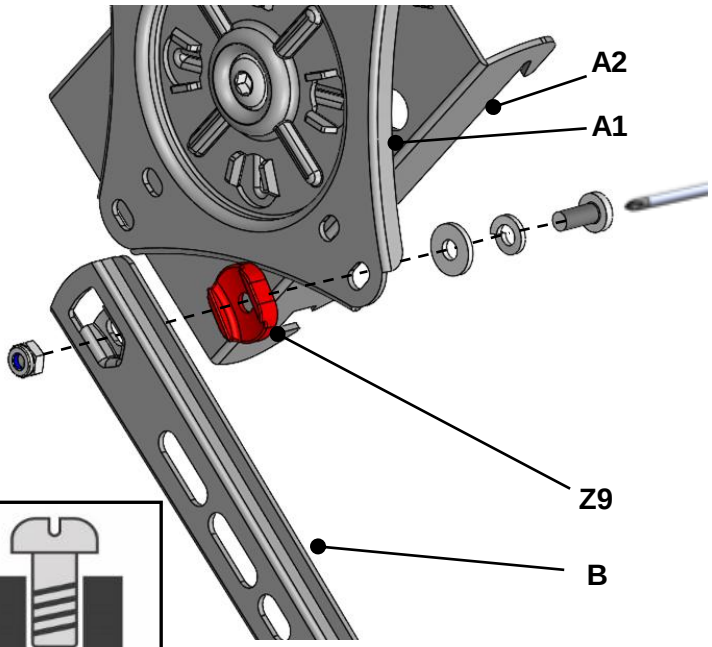

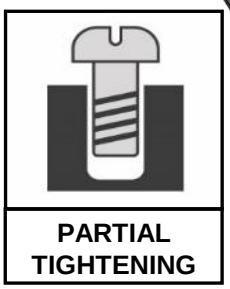

PARTIAL TIGHTENING

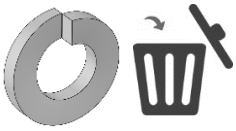

Correct

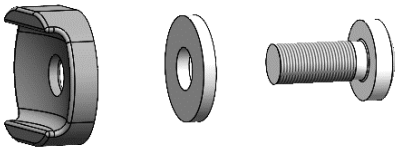

Incorrect

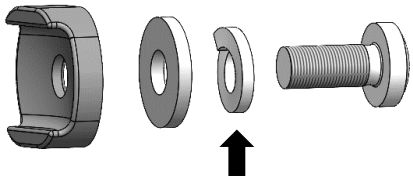

Position the adaptors according to your TV mounting hole pattern.

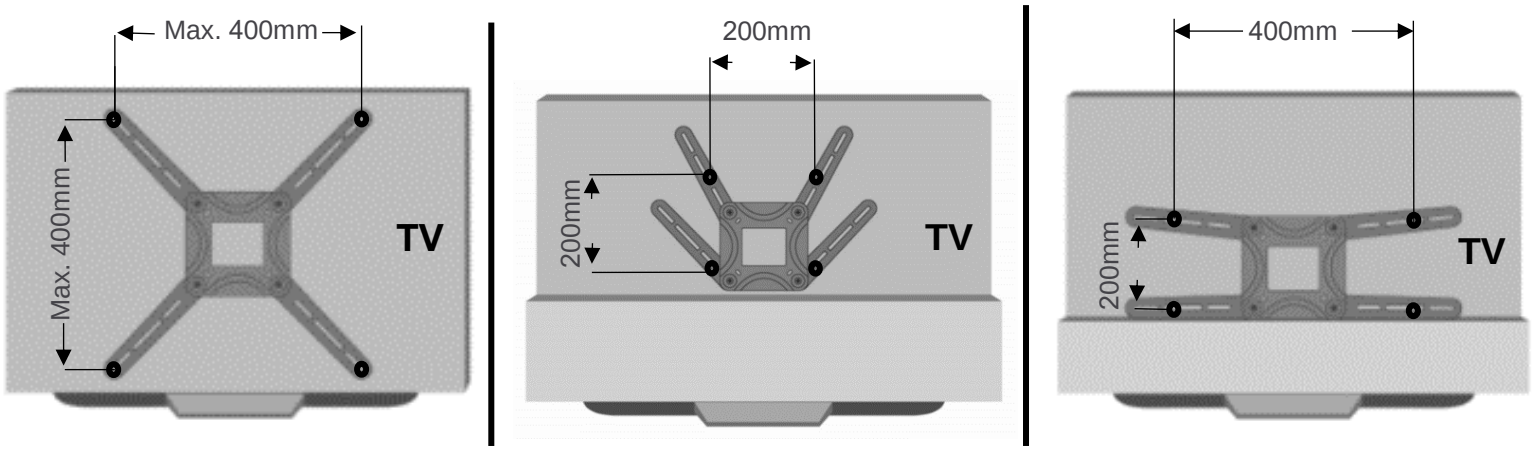

For more positioning options turn to the last page.

IV

Connect the rotation mechanism (A) with the adaptors (B) to the TV in all 4 TV mounting holes

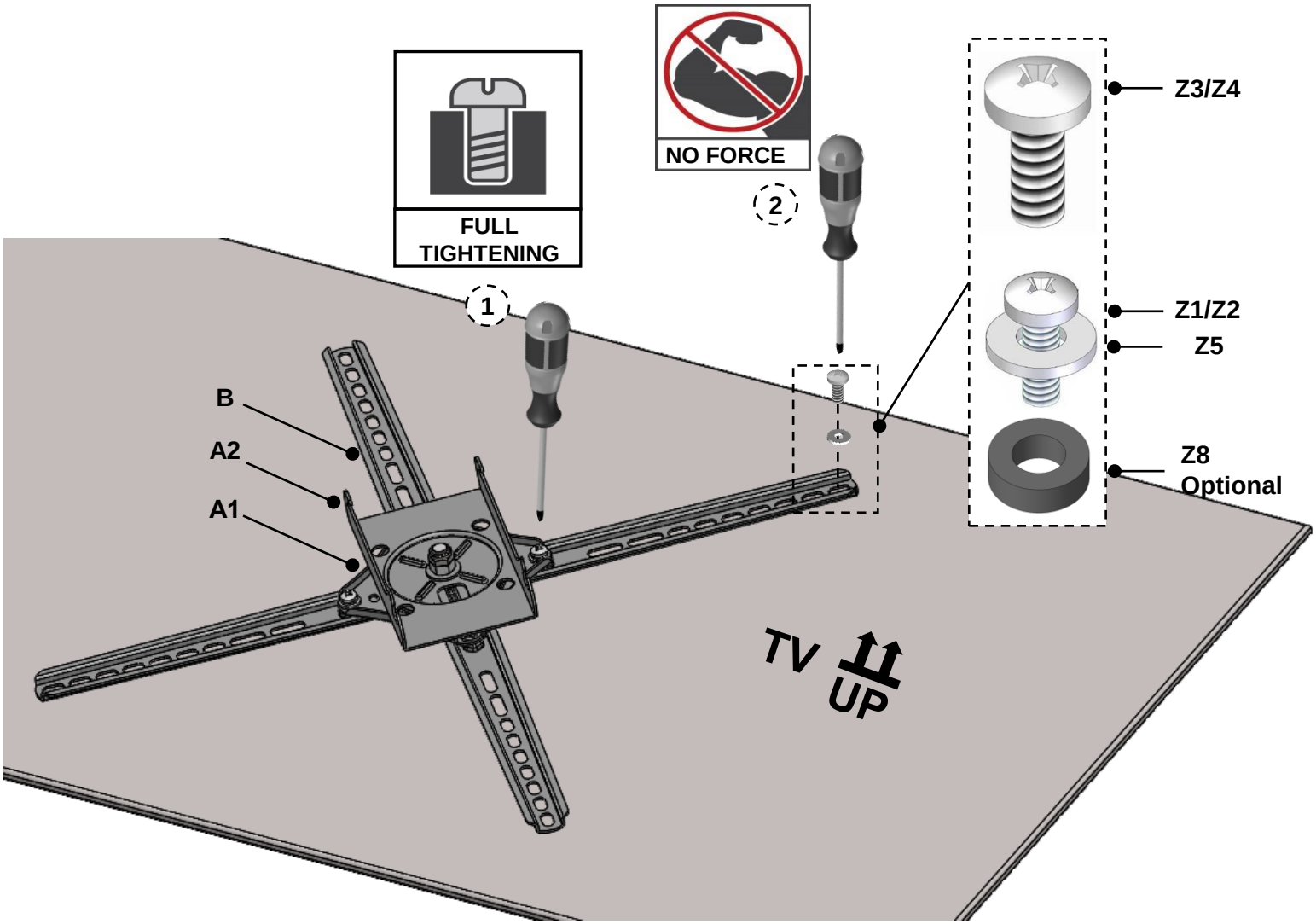

2

Follow the steps according to whether you're installing on a wall or on a mount

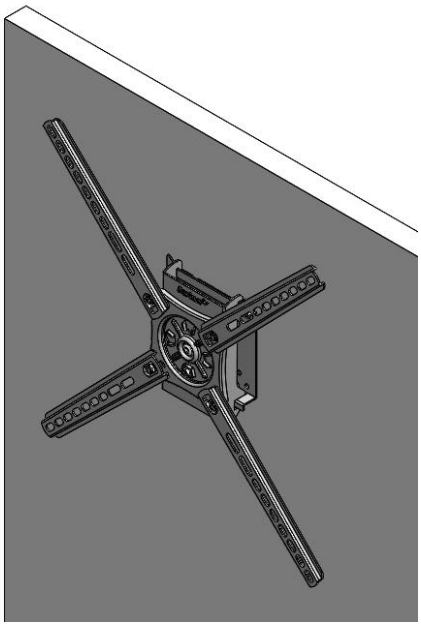

3

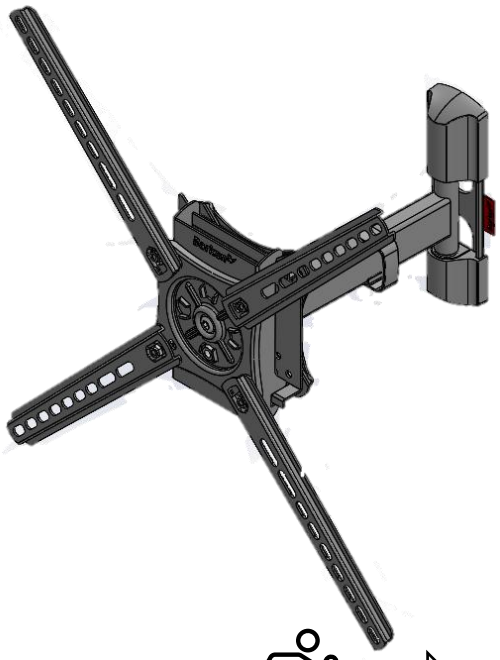

5

Install the Connection Plate (C) on the wall

3 **Determine the desired installation height**

Note, the center of the TV back screen mounting holes is usually different from the center of the entire screen.

3a The recommended height of the screen center from the floor is 43" – 47" / 110 - 120 cm. Determine the distance - ❶ from the bottom edge of the TV to the floor.

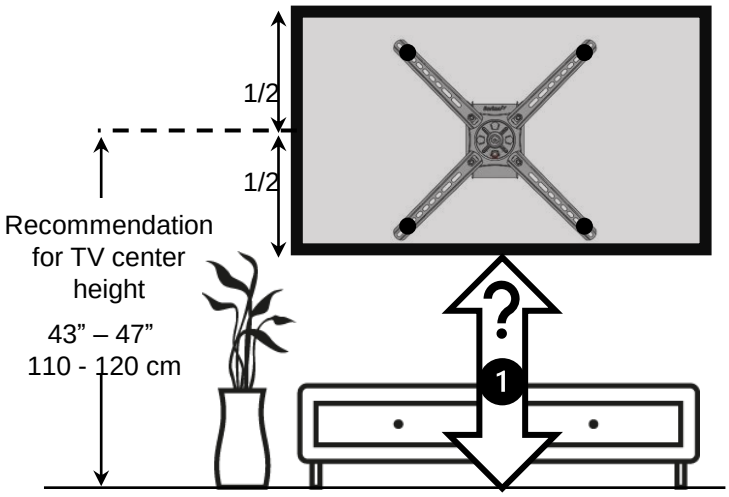

3b Determine the distance- ❷ from the center of the back screen mounting holes to the bottom edge of the TV.

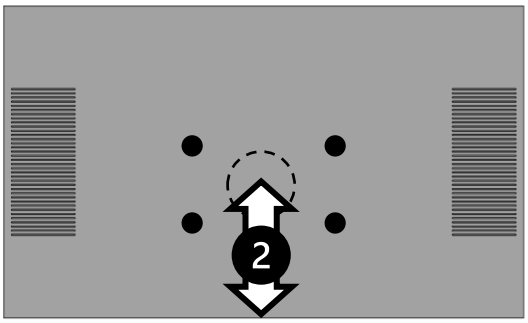

3c Position the center of the Connection Plate (C) at the distance from the floor that equals the sum of the combined distances of ❶ and ❷. On the wall, mark the center of the back screen mounting holes.

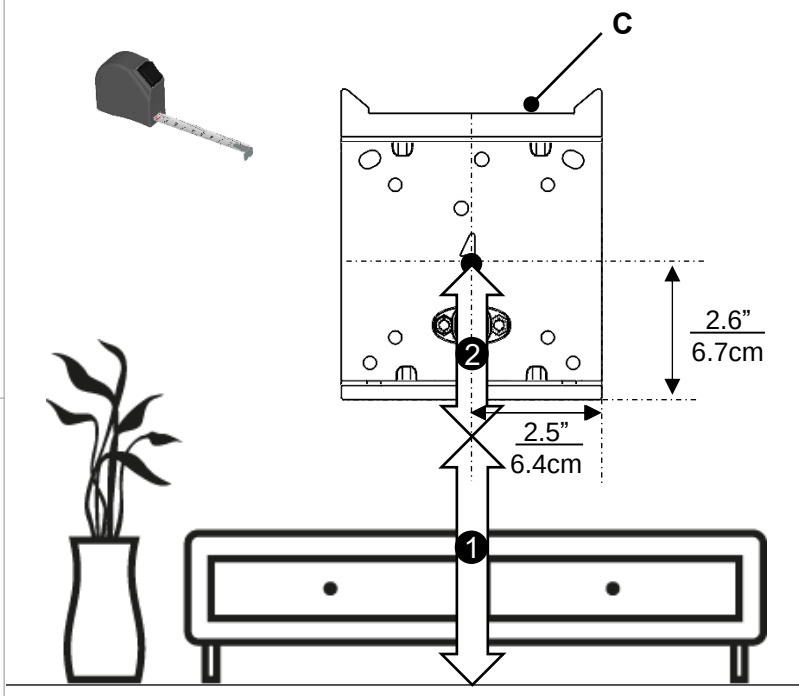

https://www.barkanmounts.com/faq

4

Follow the steps according to your wall type

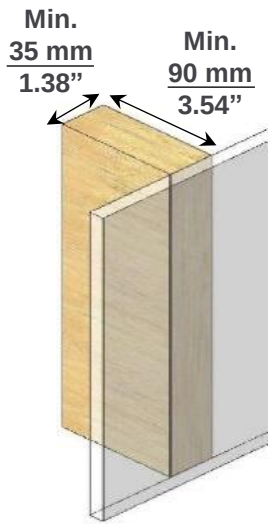

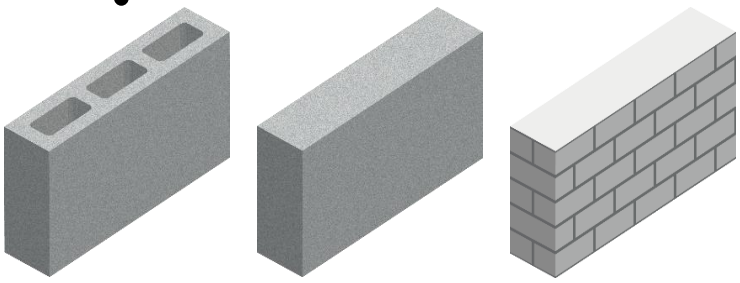

Mark the holes on the wall according to the desired position

4a

Use a stud finder

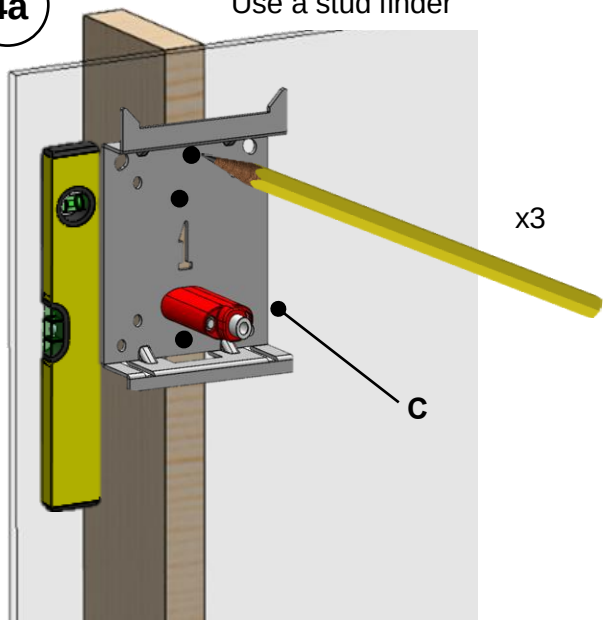

4b

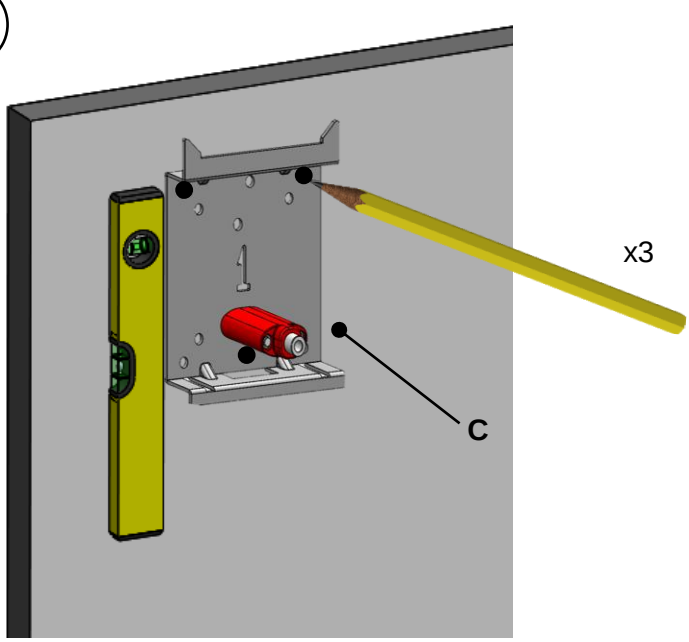

Make sure all holes are drilled inside the stud

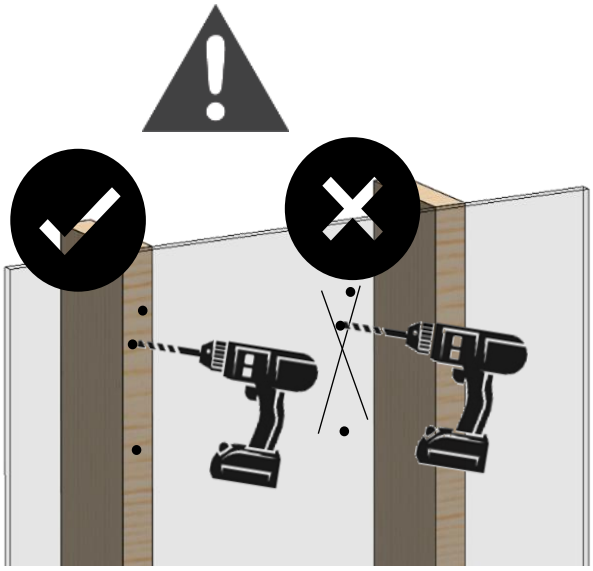

Make sure there are no electrical/water lines in the wall before drilling, and then drill according to the markings

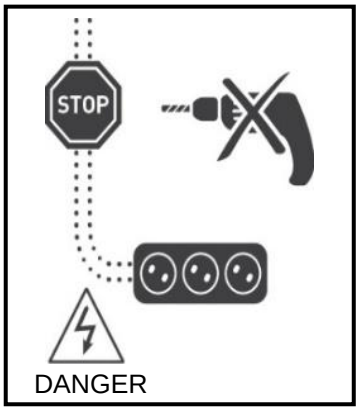

4a Drill with 5/32” \ 4mm drill bit.

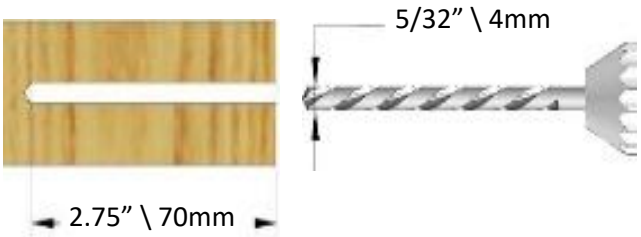

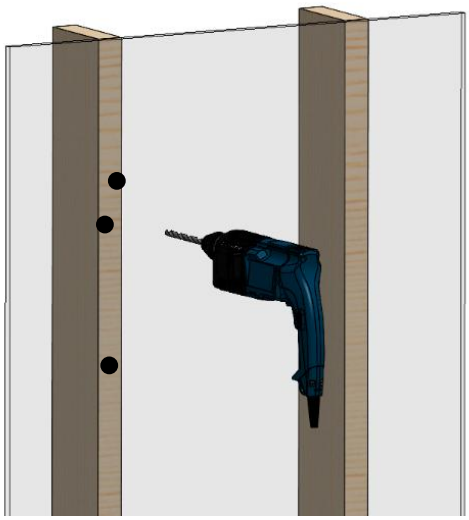

4b First use 1/4” \ 6mm drill bit.

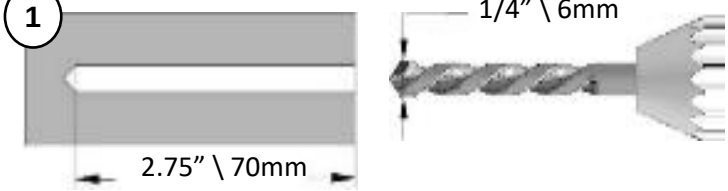

Afterwards use 3/8” \ 10mm drill bit.

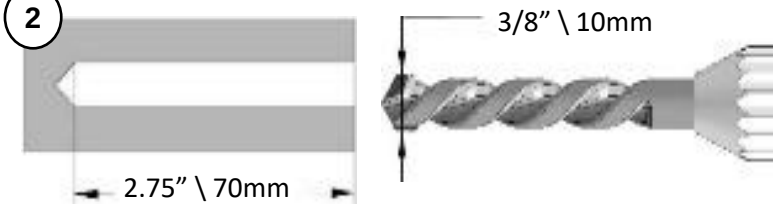

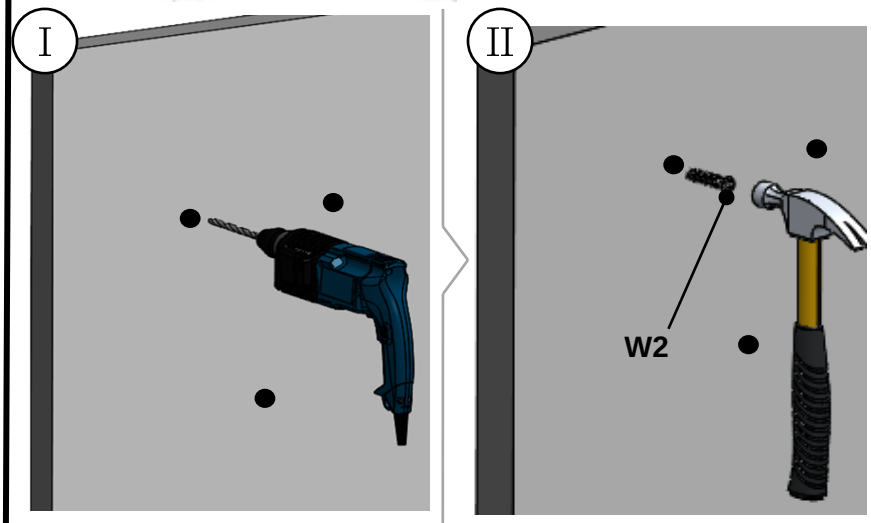

The anchor must be sunk at least 3/8“\10 mm into the plaster coating.

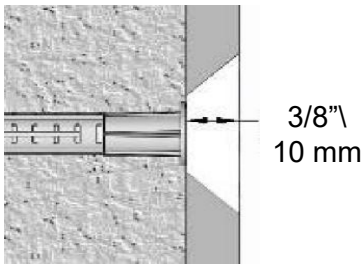

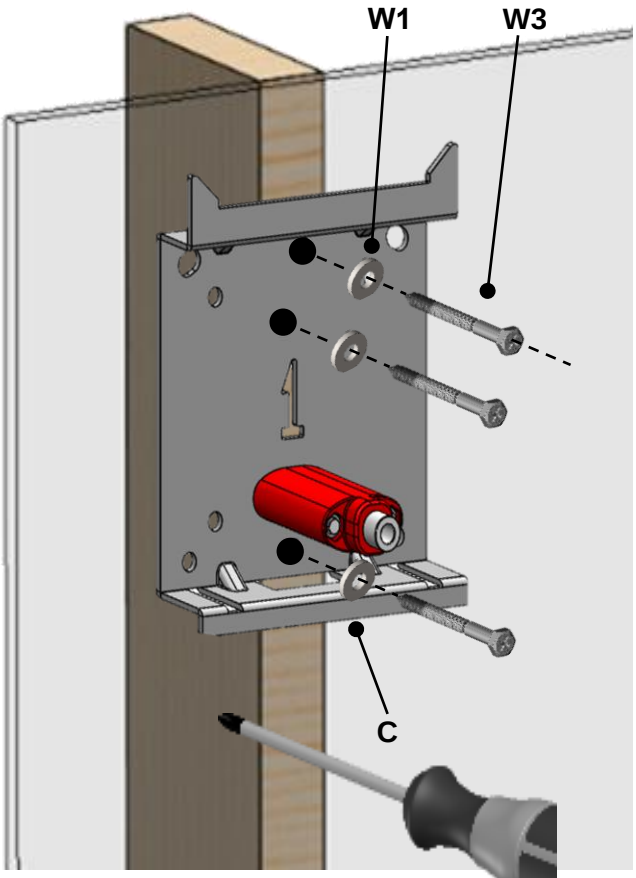

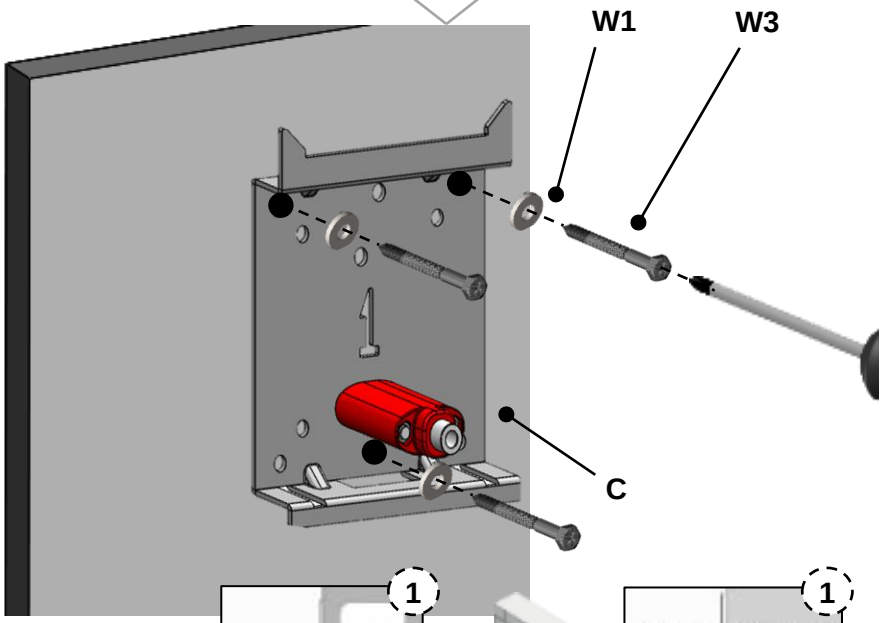

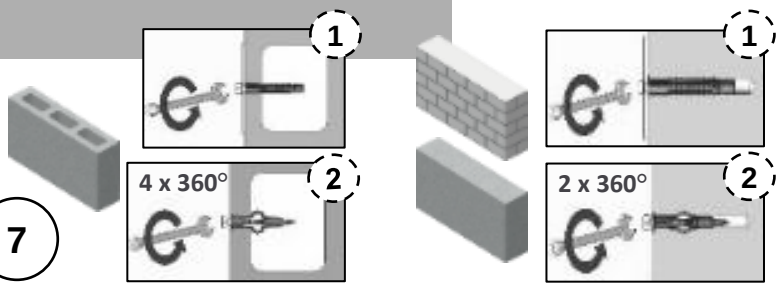

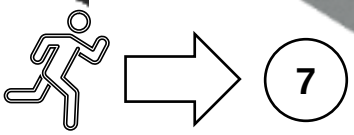

5 Set the mount to an upright position – without tilt

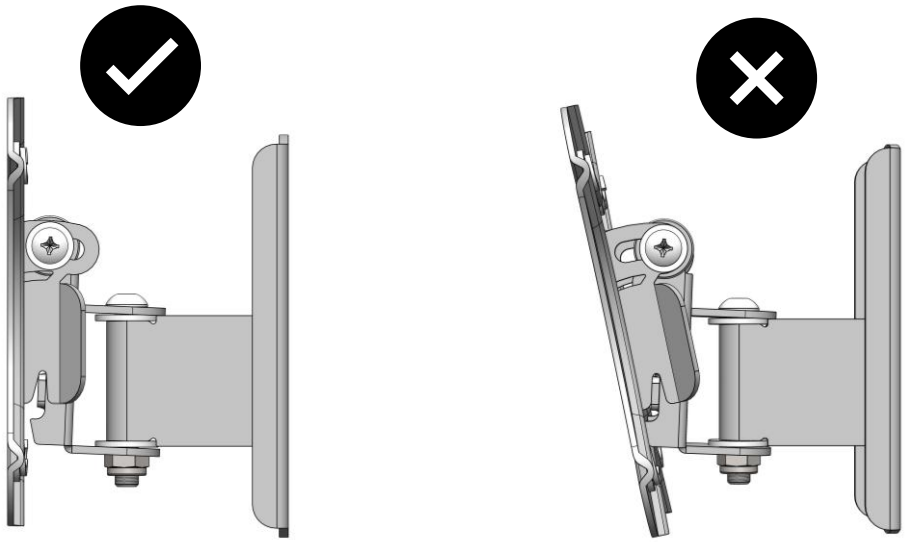

6 Install the Connection Plate on the TV mount-

Install the Connection Plate (C) on the TV mount by inserting screws (Z6) through the wanted holes (according to the TV mounting hole pattern) and securing them from the other side with nuts (Z7)

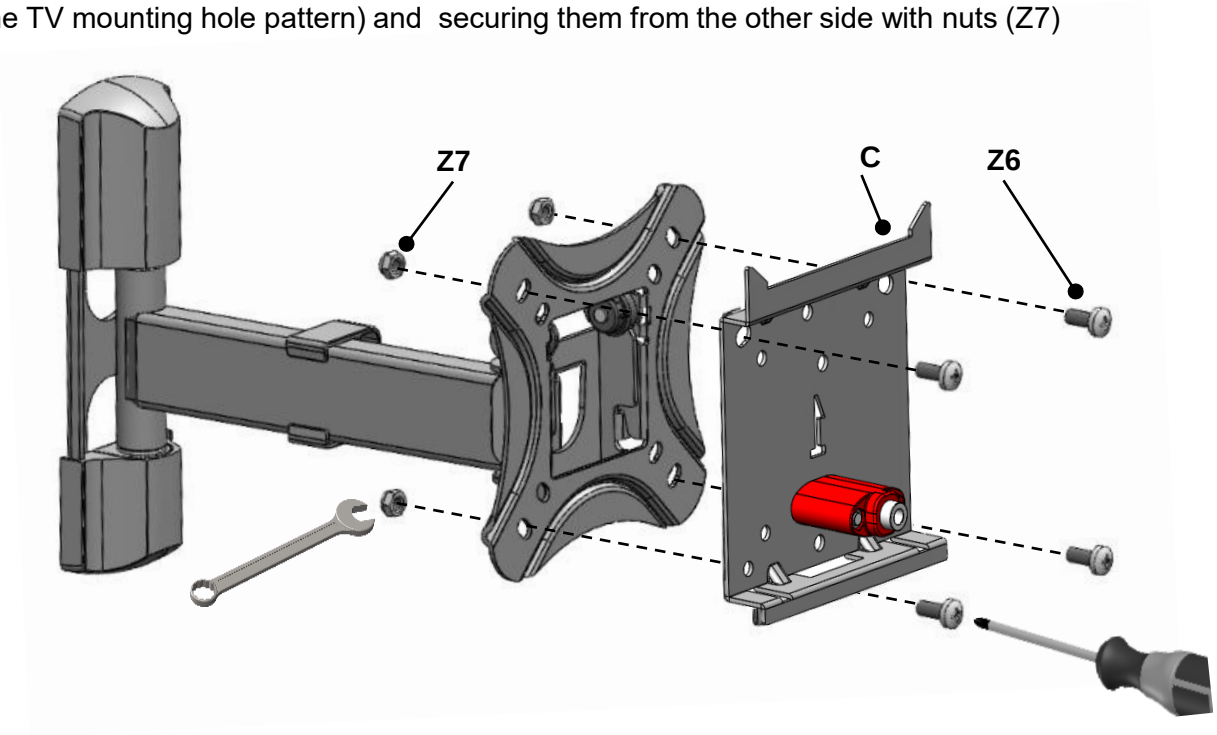

7 Weight test

Apply force on the upper part of the plate and make sure it is connected securely

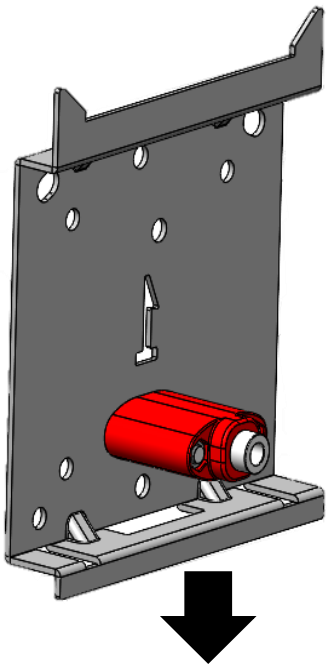

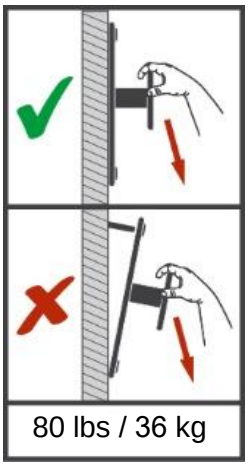

8 Install the TV on the Connection Plate

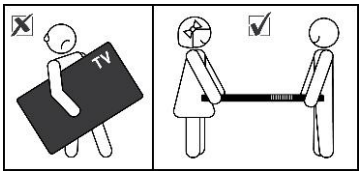

I Hang the TV on the Connection Plate (C), **make sure** part A2 attaches both upper teeth securely to the Connection Plate.

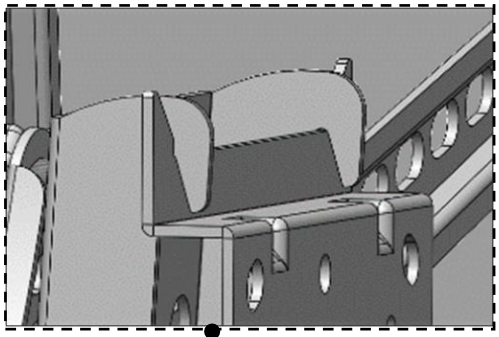

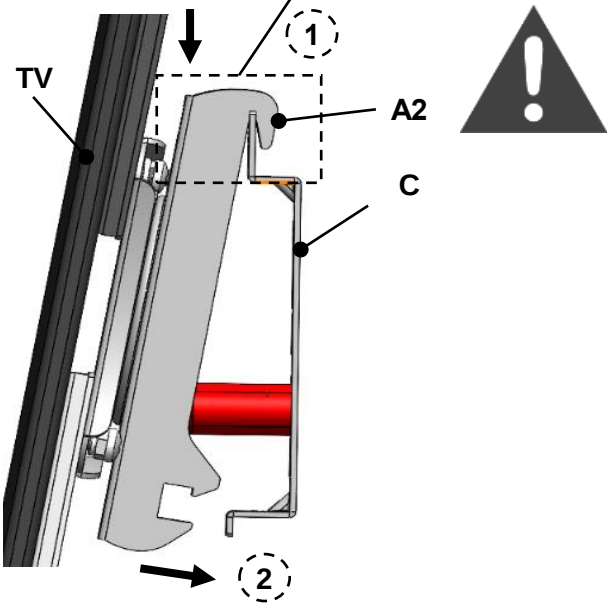

II Then, push the bottom of the TV towards the wall until the lower teeth of part A2 are completely inserted into the Connection Plate's slots (you will hear a "click")

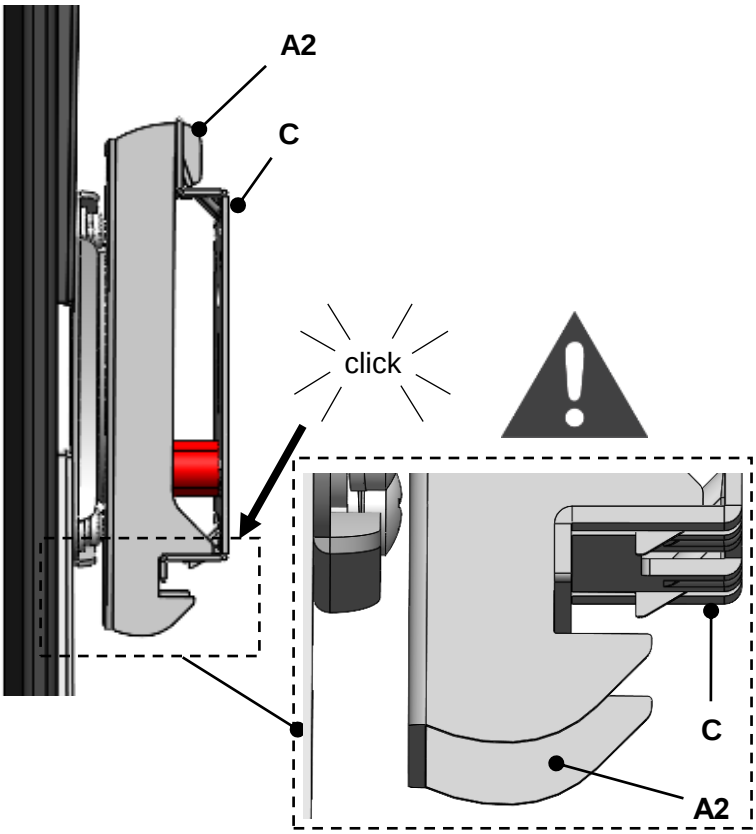

9 Screen rotation

I Gently pull the bottom of the TV away from the wall/mount, and slightly rotate in the desired direction

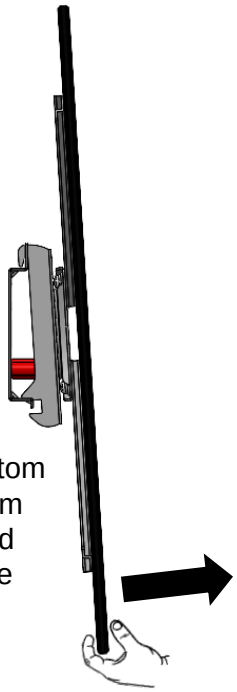

II Stop pulling the screen and continue to rotate it with both hands until a click is felt and the screen locks into place. The screen locks after turning 90˚(a quarter turn). Repeat if another rotation is required.

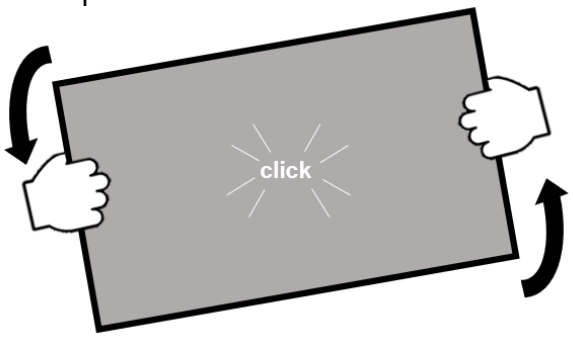

10 Level the TV

If necessary, level the screen by holding it with both hands and, without pulling it out and unlocking it, rotating it gently in the desired direction,

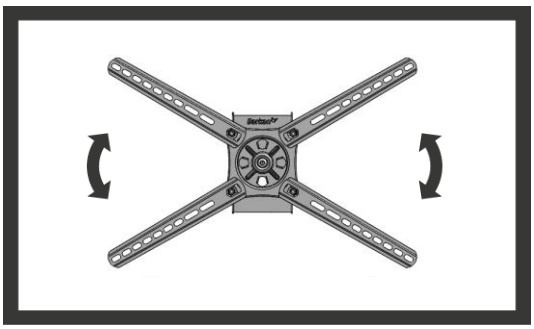

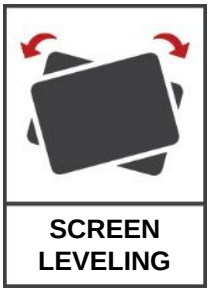

11 Periodic Care

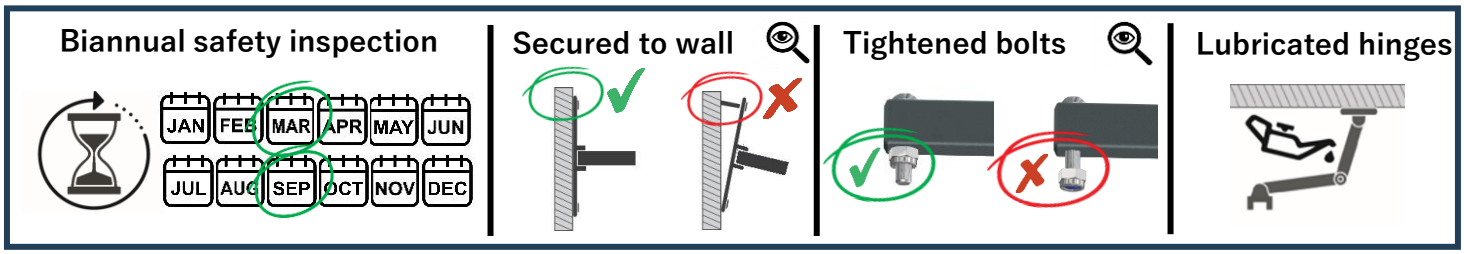

Disconnect the TV

Gently pull the bottom of the TV away from the wall/mount, and lift it upwards

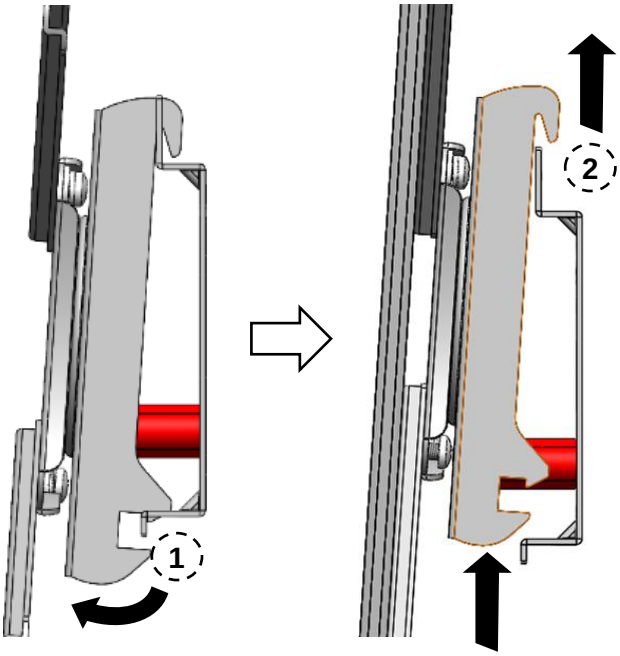

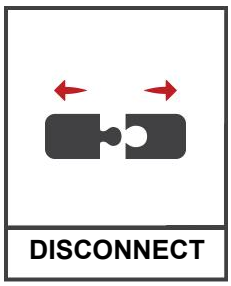

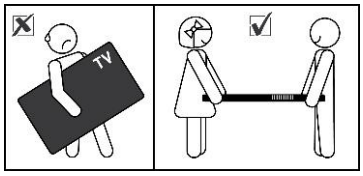

BACKSCREEN CONNECTION POSITIONING OPTIONS
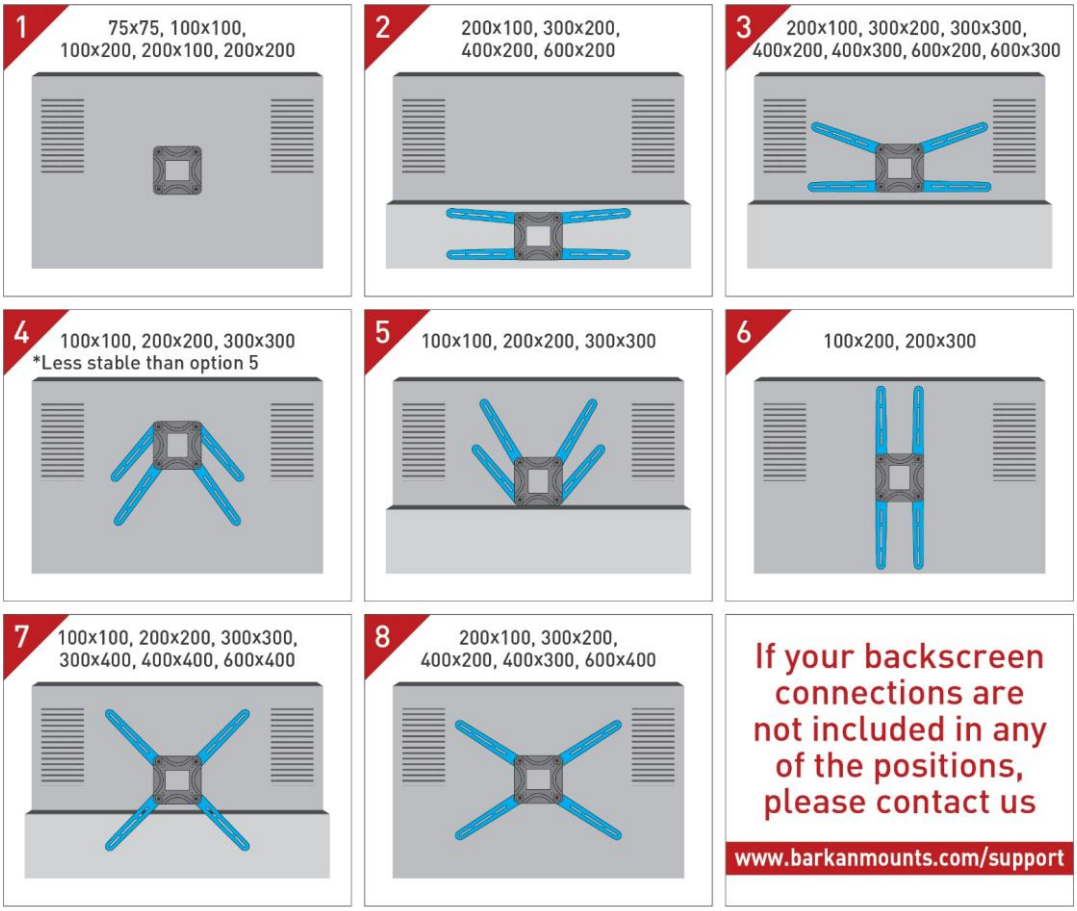
All TV backscreen connections are in millimeters (Width x Height).
There are a few sizes of TV plates available.
The backscreen connections in position 1 are included in some of the different TV plates, according to their size, and do not require the use of the 4 adapters (marked in blue).