21.5" IPS technology panel with height adjustable stand and 100Hz refresh rate

Stylish edge-to-edge design makes the ProLite XUB2292HSU perfect for multi-monitor set-ups. The IPS panel technology offers accurate and consistent colour reproduction with wide viewing angles. The 100Hz refresh rate together with FreeSync function provides an instant, tangible improvement in image smoothness. High contrast and brightness values mean the monitor will provide excellent performance for photographic and web design. Equipped with speakers, USB 3.2 hub, headphone socket, HDMI and DisplayPort connections, a blue light reducer function to reduce eye fatigue and an ergonomic 150mm height adjustable stand for optimal user comfort, make this monitor a great choice for both multi-monitor configuration and office applications.

Available also in black : ProLite XUB2292HSU-B6

100Hz

A 100Hz refresh rate translates into increased smoothness of the image. This means that flickering is reduced and therefore eye fatigue is also less noticeable. The increased frequency also means smoother transitions between contrasting colours, smoother motion scenes in both movies and gaming, and even reduced mouse cursor flickering.

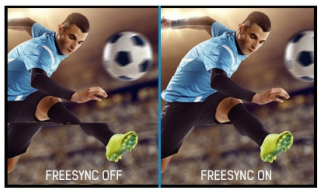

FreeSync™ Technology

AMD FreeSync™ technology puts an end to choppy gameplay and broken frames with fluid, artifact-free performance at virtually any framerate.

01 DISPLAY CHARACTERISTICS

Design	3-side borderless
Diagonal	21.5", 54.6cm
Panel	IPS Panel Technology LED, matte finish
Native resolution	1920 x 1080 @100Hz (2.1 megapixel Full HD)
Aspect ratio	16:9
Panel brightness	250 cd/m²
Static contrast	1000:1
Advanced contrast	80M:1
Response time (MPRT)	0.4ms
Viewing zone	horizontal/vertical: 178°/178°, right/left: 89°/89°, up/down: 89°/89°
Colour support	16.7mln (sRGB: 99%; NTSC: 72%)
Horizontal Sync	30 - 115kHz
Viewable area W x H	476.1 x 267.8mm, 18.7 x 10.5"
Pixel pitch	0.248mm
Colour	matte, white

02 INTERFACES / CONNECTORS / CONTROLS

Signal input	HDMI x1 DisplayPort x1
USB HUB	x4 (v. 3.2 Gen 1 (5Gbps, DC5V, 900mA))
HDCP	yes
Headphone connector	yes

03 FEATURES

Blue light reducer	yes
Flicker free	yes
FreeSync support	yes
Extra	i-Style colour
OSD languages	EN, DE, FR, ES, IT, PT, RU, JP, CZ, NL, PL
Control buttons	Signal Select / Exit, + / Volume, - / Eco +, Menu , Power
User controls	picture adjust (contrast, brightness, i-Style colour, ACR, Eco, OD, X-Res technology), image settings (blue light reducer, sharp&soft, video mode adjust), colour settings (gamma, 6-axis, colour temp.), audio settings (volume, mute), OSD settings (OSD H. position, OSD V. position, OSD time, OSD rotate, language), extra1 (MBR, FreeSync, USB BC), extra2 (reset, DDC/CI, signal select, HDMI range, opening logo, LED, information)
Speakers	2 x 2W
Convenience	Kensington-lock™ prepared, DDC/CI, DDC2B, Mac OSX

04 MECHANICAL

Display position adjustments	height, swivel, tilt, pivot (rotation both sides)
Height adjustment	150mm
Rotation (PIVOT function)	90°
Swivel stand	90°; 45 ° left; 45° right
Tilt angle	22° up; 5° down
VESA mounting	100 x 100mm

Cable management system	yes

05 ACCESSORIES INCLUDED

Cables	power, USB, HDMI
Other	quick start guide, safety guide

06 POWER MANAGEMENT

Power supply unit	internal
Power supply	AC 100 - 240V, 50/60Hz
Power usage	14W typical, 0.5W stand by, 0.3W off mode

07 SUSTAINABILITY

Regulations	TCO Certified, CE, TÜV-Bauart, EAC, VCCI-B, PSE, RoHS support, ErP, WEEE, REACH, UKCA
REACH SVHC	above 0.1%: Lead

08 DIMENSIONS / WEIGHT

Product dimensions W x H x D	489.5 x 336.5 (486.5) x 109.5mm
Box dimensions W x H x D	560 x 380 x 159mm
Weight (without box)	4.5kg
Weight (with box)	5.9kg
EAN code	4948570123322

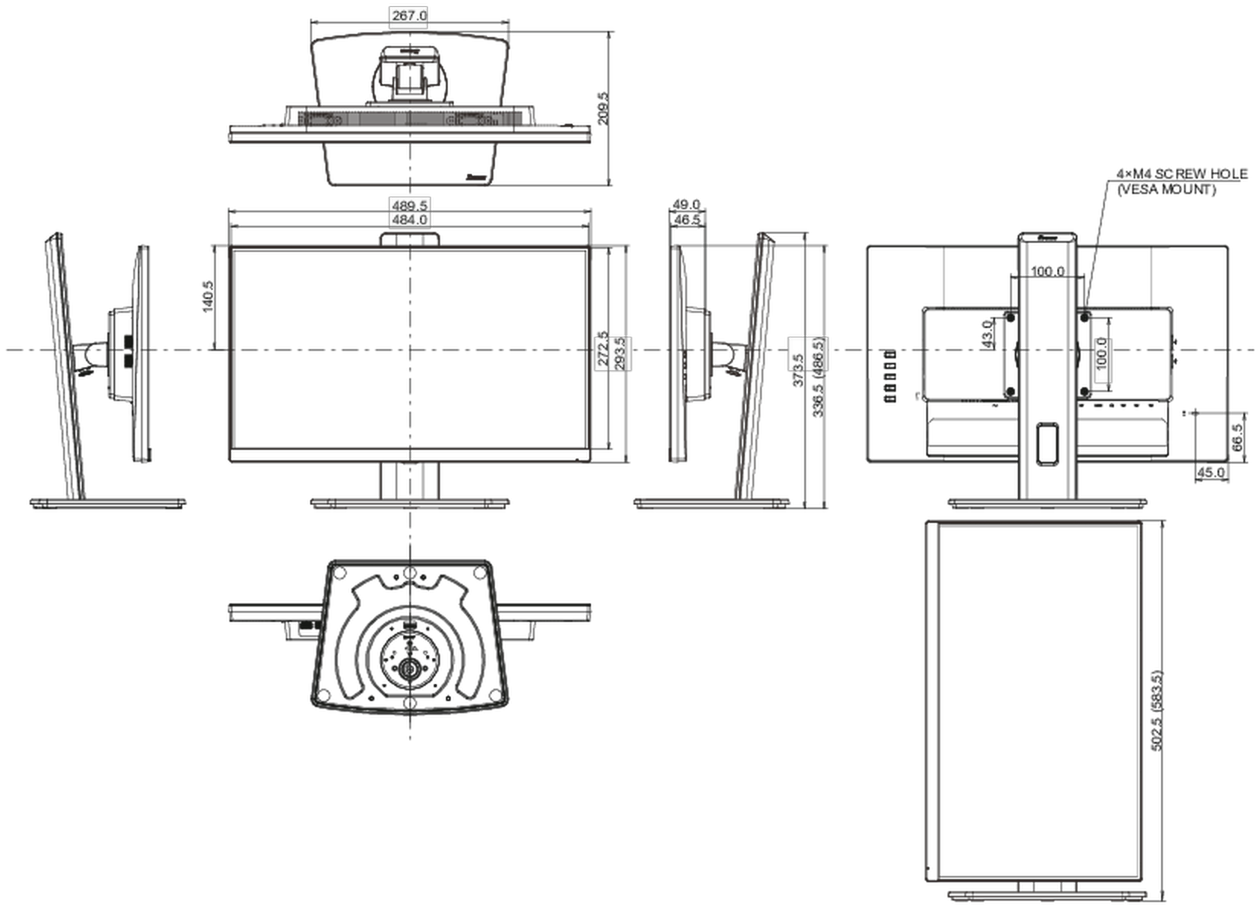

All trademarks and registered trademarks acknowledged. E & O E. Specification subject to change without notice. All LCD's comply with ISO-9241-307:2008 in connection with pixel defects.

© IIYAMA CORPORATION. ALL RIGHTS RESERVED