SILVERSTONE

HELA Series

HELA 3000Rz

80 PLUS Platinum 3000W ATX 3.1 & PCIe 5 Fully Modular ATX Power Supply

- Compliant with ATX 3.1 and PCIe Gen 5 standards, supporting 12V-2x6 PCIe connectors
- 4 x native 12V-2x6 connectors with cables included, supporting RTX 40/50 series GPUs
- High efficiency with 80 PLUS Platinum certification
- 24/7 continuous power output with 50℃ operating temperature
- Fully modular design with SilverStone's 3rd generation modular interface
- Silent running 135mm dual ball bearing fan with delayed shut-off function
- Compact 200mm depth design allows for easy system integration

SPECIFICATION

SilverStone HELA Series

HELA 3000Rz

SST-HA3000R-PM

ATX Switching Power Supply
80PLUS Platinum efficiency certified.

3000W

1.Scope

This document defines the Desktop Power Supply quality, ATX12V size, 5 outputs 3000W power supplies for the application of Desktop systems. This power supplies meet the buss structures of Intel platform, and the following key features:
1) Input: High line Range (220-264Vrms) with Active Power Factor Correction.
2) Output: Product is provided with a total of 5 outputs to meet the requirement of ATX12V/EPS12V platform.
3) Cooling: A 140mm high reliable DC fan is used for cooling the power supply.

2.Electrical

The electrical specifications that follow is going to meet over the environmental ranges specified in Section 3 unless otherwise noted.

2.1. AC Input

Table 1 lists AC input voltage and frequency range for continuous operation. The power supply is capable of supplying full-rated output power over the input voltage ranges as specified.

Parameter	Min	Nominal Input	Max	Unit
V_{in} Voltage	220	230-240	264	Vrms
V_{in} Frequency	47	50-60	63	Hz
V_{in} Current		220V-240V/16A		
Power Factor(PF)	>0.97 at >0.95 at >0.95 at	230Vac 60/50Hz 100% Load 230Vac 60/50Hz 50% Load 230Vac 60/50Hz 20% Load		

Table 1. AC input

The total output power is 3000W max when input voltage is 230Vac
The inrush current is less than 120A under the conditions of 230Vrms input and 25oC ambient cold start. The inrush current is limited to the extent that no damage will be done to the power supply under any specified line, load, and temperature conditions. The inrush current will not cause external protection devices (fuses) to trip.
The leakage current of the power supply module is less than 3.5mA measured at 230Vac input.
he repetitive ON/OFF cycling of AC input voltage will not damage the power supply.

2.2 DC Output

2.2.1. DC Output Voltage Regulations

The DC output voltages remain within the regulation ranges shown in Table 2. when measured the at load end of the output connectors under all AC line, O/P loads, and environmental conditions. The voltage regulation will be maintained under continuous operation for a period of time equal to the MTBF specified in section 5.2 at any steady state temperature and operating conditions specified in section 3.

	+12V	+5V	+3.3V	-12V	+5Vsb	Unit
Total DC Output Regulation	+5/-7%	±5%	±5%	±8%	±5%	Volt
AC Line Regulation	±3%	±2%	±2%	±2.5%	±3%	Volt

Table 2. DC Output Voltage Regulations

12V output under load conditions below 10A, the 12V output voltage regulation is ±3%. When the 12Vo load exceeds 10A, the regulation improves to ±2%.

The remote sense is provided to +12V , +5V, and +3.3V outputs to compensate for excessive cable drops.

2.2.2. DC Output Load Distributions

The Table 3. defines the power supply typical output load distribution.

Output Rail	Output Voltage	Minimum Current (A)	3000W Max (A)
V1	+12V	1.0	250.0
V2	+5V	0.0	22.0
V3	+3.3V	0.0	22.0
V4	-12V	0.0	0.3
V5	+5Vsb	0.0	4.0
Max. combined O/P of V2 & V3			120W
Max. combined O/P of V1, V2, V3, V4, V5			3000W

Table 3. DC Output Load Distribution

2.2.3. DC Output Efficiency & Eup* requirements

The power supply efficiency is 90% minimum measured at 10%,efficiency is 92% minimum measured at 20%, efficiency is 94% minimum measured at 50%, efficiency is 90% minimum measured at 100%, which is 230Vrms conditions. The efficiency is measured in accordance with the definition released by the 80 Plus Organization (Plug Load Solutions). shown in Table 4.

	LOAD	+12V	+5V	+3.3V	-12V	+5VSB	SPEC
3000W	10%	23.9A	1.4A	1.4A	0.03A	0.38A	**90%**
	20%	47.72A	2.76A	2.76A	0.06A	0.76A	**92%**
	50%	119.29A	6.90A	6.90A	0.14A	1.91A	**94%**
	100%	238.58A	13.80A	13.80A	0.29A	3.82A	**90%**

Table 4 : The power supply typical output load distribution

In order to meet the 2010 and 2013 ErP Lot 6 requirements, AMS&2014 ErP Lot 3 requirements, and if any Computers use an Alternative Sleep Mode (ASM) then the 5V standby efficiency should be met as shown in Table5 which is measured with the main outputs off (PS_ON# high state)

5VSB Load Target	5VSB Actual Load	Efficiency Target (230V input)	Remark
45mA		≥45%	ErP* Lot 6 2013
90mA		≥55%	ErP* Lot 6 2010
0.55A		≥75%	ASM and ErP* Lot 3 2014
1.00A		≥75%	Recommend
1.50A		≥75%	ASM and ErP* Lot 3 2014
Max / Label	4.0A /Label	≥75%	Recommend

Table 5: The power supply typical output load distribution

Low Load Efficiency

The lowest DC load for computers at this Idle Mode is determined to be 10 Watts for mainstream computers. Computers with PSU larger than 500 Watts are also expected to have more components and therefore the Idle Mode will be at a higher DC Load. The PSU above 500 Watts will use the Low Load Efficiency set at the 2% level. Low Load Efficiency levels will be phased in over time.

	LOAD	+12V	+5V	+3.3V	-12V	+5VSB	SPEC
3000W	2%	4.78A	0.267A	0.267A	0.0A	0.076A	60%

2.2.4. DC Output Ripple & Noise

The output ripple & noise specifications listed in Table 6. will meet throughout the load ranges as specified in section 2.2.2 and the nominal line input voltage conditions as specified in section 2.1. Ripple & noise is defined as periodic of random signals over a frequency band of 10Hz to 20MHz. Measurements should be made with an oscilloscope with 20MHz bandwidth. adding a 10uF electrolytic capacitor and a 0.1uF ceramic capacitor across output terminal during ripple & noise measurement.

	+12V	+5V	+3.3V	-12V	+5Vsb	Unit
Max Ripple & Noise (Under 5% Load)	120	50	50	80	50	mV P-P
Max Ripple & Noise	120	50	50	80	50	mV P-P

Table 6. DC Output Ripple & Noise

2.2.5. DC Output Transient Response

The output voltages will remain within the regulation limits specified in Table 2. The load-changing repetition rate is 50Hz to 10KHz, and the transient load slew rate 0.5A/us. The maximum step load size, and output capacitive loading are specified as followings in Table 7.

	+12V	+5V	+3.3V	-12V	+5Vsb
Voltage limits.	+5/-7%	±5%	±5%	±10%	±5%
Load Change Low Load	2.0%~87%	0.0%~40%	0.0%~40%	0A ~ 0.1A	0A ~ 0.5A
Load Change High Load	15%~100%	60%~100%	60%~100%	0.2A ~ 0.3A	2.0A ~ 2.5A
Capacitive Load	3300uF*5	3300uF	3300uF	330uF	3300uF

Table 7. DC Output Transient Response

2.2.6. DC Output Voltage Hold-up Time

The power supply will maintain outputs in regulation per section 2.2.1 despite a loss of input power at the nominal range of AC input and at 100% of maximum continuous output load as applicable for a minimum of 12 msec.

2.2.7. PCI-E 5.0_Power Excursion

PCI-E CEM5 100% to 200% for power excursion

Power Excursion % of PSU Rated Size PSU ≤ 450 Watts & PSUs without 12VHPWR Connector	Power Excursion % of PSU Rated Size PSU > 450 Watts & 12VHPWR Connector present	Time for Power Excursion (T_E)	Testing Duty Cycle
150%	200%	100 µs	5%
145%	180%	1 ms	8%
135%	160%	10 ms	12.5%
110%	120%	100 ms	25%
100%	100%	Infinite	--

Figure 1. PCIE* AIC and PSU Power Budget used for Peak Power Excursion

The DC output voltages are required to remain within the regulation ranges shown in Figure.2

Outputs Voltage	Voltage Range (V)		
	Min	Typical	Max
+5V	4.75	5.0	5.25
+3.3V	3.13	3.3	3.47
-12V	-13.2	-12.0	-10.8
+5VSB	4.75	5.0	5.25
+12V1	11.2	12.0	12.6
+12V2	11.2	12.0	12.6

Figure 2. Multi-Rail DC Load Voltage Ranges

5V and 3.3V voltage rails (ATX Multi-Rail power supplies only) start at 80% of full load criteria
DC output voltage will stay within regulation of +5/- 8% during the step load changes(+12V Capacitive Load 6600uF)
The 12V-2x6 power connector delivers up to 55 A of continuous current to provide a maximum of 600W of power to the Add-in Card on a 12 V Aux rail, are given in figure 3.

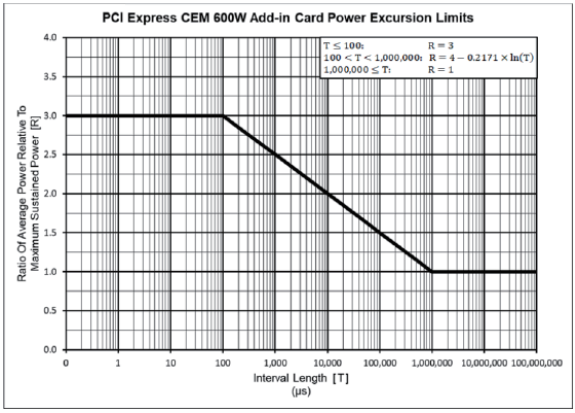

Figure 3. PCI Express* CEM Add-in Card Power Excursion Limits Chart

2.3. Timing / Housekeeping / control

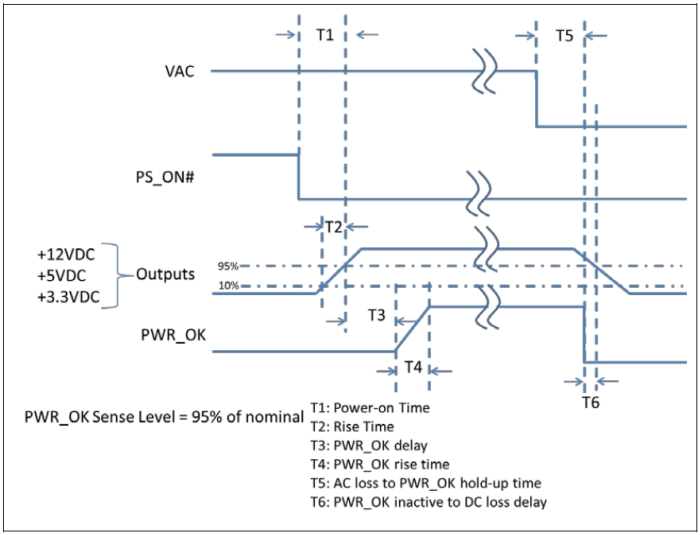

Figure4

Parameter	Description	Value	
		Required	Recommended for Alternative Sleep Mode
T0	AC power on time	<2s	
T1	Power-on time		< 150ms
T2	Rise time	0.2 – 20 ms	
T3	PWR_OK delay		100 – 150 ms
T4	PWR_OK rise time	< 10 ms	
T5	AC loss to PWR_OK hold-up time	> 11 ms	
T6	PWR_OK inactive to DC loss delay	> 1 ms	

Note: T3 PWR_OK Delay: 100 milliseconds to 150 milliseconds over all AC line and DC output load conditions.
Only look Form PG to 3.3V

2.3.1. PWR_OK (Power Good Signal)

PWR_OK is a “power good” signal. It will be asserted high by the power supply to indicate that the +5V output is above the under voltage threshold listed in Table 2. of Section 2.2. PWR_OK will be de-asserted to a low state when +5V output voltage falls below under voltage threshold, or when AC power has been removed for a time sufficiently such that power supply operation cannot work normally. The electrical and timing characteristics of the PWR_OK signal are given in Table 9. and in figure 4.

Signal type	+5V TTL compatible
Logic level low	< 0.4 V while sinking 4 mA
Logic level high	Between 2.4 V and 5 V output while sourcing 200 μA
High-state output impedance	1 kΩ from output to common
Max Ripple/Noise	400 mV p-p

Table 9. PWR_OK Signal Characteristics

2.3.2. PS_ON (DC Soft Start)

PS_ON is an active-low, TTL-compatible signal that allows a mother-board to remotely control the power supply in conjunction with features such as soft on/off, Wake on LAN, or wake-on modem. When PS_ON is pulled to low-level (1.5V max.), the power supply will turn on the main DC output rails: +12V, +5V, +3.3V, and –12V. When PS_ON is
pulled to high-level (2.4V min.), the DC output rails will not deliver current and will be held at zero potential with respect to ground. PS_ON has no effect to the +5Vsb output, which is always enabled whenever the AC power is present. Table 10 lists PS_ON signal characteristics.

	Min	Max
V_{IL}, Input Low Voltage	0.0V	0.8V
I_{IL}, Input Low Current (Vin = 0.4V)		-1.6mA
V_{IH}, Input high Voltage (Iin = -200uA)	2.0V	
V_{IH}, open circuit, Iin =0		5.25V

Table 10. PS_ON Signal Characteristics

2.3.3. +5Vsb (Standby Voltage Output)

+5Vsb is a standby voltage output that is active whenever the AC power is present. It provides a power source for circuits that must remain operational when the four main DC output rails are in a disabled state. Example uses include soft power control, Wake on LAN, wake on modem, intrusion detection, or suspend state activities. There is over current protection on the +5Vsb output to ensure the power supply will not be damaged if external circuits draw more current than the supply can provide.

2.3.4. Power-on Time

The power-on time is defined as the time from when PS_ON is pulled low to when the12V, +5V, and +3.3V output are within the regulation ranges specified in Section 2.2.1. The power-on time will be less than 150ms (T1 <150 ms). +5Vsb has a power on time of two second max. after the valid AC Voltages applied.

2.3.5. Rise Time

The output voltage rise from ≤ 10% of nominal to within the regulation ranges specified in section 2.2.1 within 0.2 ms to 20 ms (0.2 ms ≤ T2 ≤ 20 ms)

2.3.6. Power Sequencing

The +12V and +5V output levels are equal to or greater than the +3.3V output at all times during power-up and normal operation. The time between the +12V or +5V output reaching its minimum in-regulation level and +3.3V reaching its minimum in-regulation level is ≤ 20 msec.

2.3.7. Overshoot at Turn-on / Turn-off

The output voltage overshoot upon the application or removal of the input voltage, or the assertion / de-assertion of PS_ON will be less than 10% above the nominal voltage.

2.3.8. Reset after Shutdown

If the power supply latches into a shutdown state because of a fault condition on its outputs, the power supply can return to normal operation only after the fault condition has been removed and the PS_ON has been cycled OFF/ON with a minimum OFF time of 1 second.

2.3.9. +5Vsb at AC Power-down

After AC power is removed, the +5Vsb standby voltage output will remain at its steady state value for the minimum hold-up time specified in Section 2.2.6 until the output begins to decrease in voltage. The decrease can be monotonic in nature, dropping to 0.0V. There are no other perturbations of this voltage at or following removal of AC power.

2.4. Output Protection

2.4.1. Over Voltage Protection

The power supply can provide latch-mode over voltage protection as defined in Table 10.

Output	Min.	Nom.	Max.	Unit
+12VDC	13.6	14.6	15.6	Volts
+5VDC	5.5	6.25	7.0	Volts
+3.3VDC	3.7	4.1	4.5	Volts

Table 10. Over Voltage Protection

2.4.2. Under Voltage Protection

The power supply can provide latch-mode over voltage protection as defined in Table 10.

Output	Min.	Nom.	Max.	Unit
+12VDC	8.80	9.30	9.80	Volts
+5VDC	4.10	4.30	4.47	Volts
+3.3VDC	2.55	2.69	2.83	Volts

Table 10. Under Voltage Protection

2.4.3. Over Current Protection

12V OCP	275A-325A
5V OCP	24A-35A
3.3 OCP	24A-35A

2.4.4. Short-circuit Protection

The power supply will shut down and latch off for shorting the +12V , +5V, +3.3V, and -12V rails to return or any other rails. Shorts between main output rails and +5Vsb will not cause any damage to power supply. +5Vsb can be capable of being shorted indefinitely, but when the short is removed, the power supply will recover automatically or by cycling PS_ON. The power supply can be capable of withstanding a continuous short circuit to the output without damage or overstress to the unit under the input conditions specified in section 2.1.

2.4.5. Over Power Protection

Fold back at 110%~150% over peak load

2.4.6. OVER TEMPERATURE PROTECTION

Protection temperature is 55℃ to 70℃ at 230V and full load

2.4.7. No-load Operation

No damage or hazardous condition will occur with all the DC output connectors disconnected from the load. The power supply may latch into the shutdown state.

2.4.8. Isolation (High Voltage Withstand)

3. Environmental

The following subsections define recommended environmental specifications and test parameters. Based on the typical conditions to which an ATX12V power supply may be subjected during operation or shipment.

3.1. Temperature

Operating	3000W ; 0℃ to +50℃
Non-operating	-20℃ to +70℃

3.2. Humidity

Operating	20% to 90% relative humidity (non-condensing)
Non-operating	5% to 95% relative humidity (non-condensing)

3.3. Altitude

Operating	0 to 0 to 16,404 ft (5000 meter)
Storage	0 to 50,000 ft

4. Electromagnetic Compatibility

The following subsections outline applicable product regulatory specifications for this power supply.

4.1. Emissions (Meet)

The power supply can comply with FCC Part 15 and EN55032: 2015 meeting Class B for both conducted and radiated emissions with a 3 dB margin.

4.2. Immunity (Meet)

The power supply can comply with EN 55035: 2017.

4.3. CE Testing (Meet)

The following standards are applied during the CE testing

EN 55032: 2015	Class B with 3dB margin minimum
EN 61000-3-2: 2014	Harmonic Current Measurement
EN 61000-3-3: 2013	Voltage Fluctuation and Flick Measurement
EN 55035: 2017, including	
IEC 61000-4-2: 2009	ESD – air discharge 8kV / ESD contact discharge 4kV
IEC 61000-4-3: 2010	Radiated, Radio Frequency Electromagnetic Field Immunity Test
IEC 61000-4-4: 2012	Electrical Fast Transient/Burst Immunity Test
IEC 61000-4-5: 2014	Surge Immunity Test – 2kV L/N to PE and 1kV L to N
IEC 61000-4-6: 2014	Immunity to Conducted Disturbances Induced by RF Fields
IEC 61000-4-8: 2010	Power Frequency Magnetic Field Immunity Test
IEC 61000-4-11: 2004	Voltage Dips and Short Interruptions Immunity Test

5. Reliability

5.1. Component De-rating

The derating process promotes quality and high reliability. All electronic components are designed with conservative derating for use in commercial and industrial environments.

5.2. Mean Time between Failures (MTBF)

120K hours minimum at full load 25℃

6. Safety (Meet)

6.1. Safety

cTUVus	UL62368-1
TUV	EN 62368-1
CB	IEC 62368-1

6.2. RoHS & REACH Compliance

The power supply meets the requirements of RoHS & REACH Compliance specified as followings:

◆European Directive for Waste of electrical and electronic equipment (WEEE) 2012/19/EU
◆European Directive for Restriction of the use of certain hazardous substances in electrical and electronic equipment (RoHS) 2011/65/EU
◆ACPEIP, Administration on the Control of Pollution caused by Electronic Information Products (China RoHS), e.g. SJ/T 11363-2006 Requirements for Concentration Limits for Certain Hazardous Substances in EIP, SJ/T 11364-2006 Marking for Control of Pollution Caused by EIP
◆Plastic and rubber parts are within the limits for 16 PAH and Benzopyrene polycyclic aromatic hydrocarbons

- PAH (Polycyclic Aromatic Hydrocarbons):
- 200mg/kg for components touched less than 30 seconds
- 10mg/kg for components touched longer than 30 seconds
- Benzopyrene are within the limits of:
- 20mg/kg for components touched less than 30 seconds
- 1mg/kg for components touched longer than 30 seconds

◆Phthalate concentration is below 1000mg/kg for:

- Diisononyl phthalate
- Diisodecyl phthalate
- Bis(2-ethylhexyl)phthalate
- Butyl benzyl phthalate
- Di-n-octyl phthalate
- Bis(n-butyl)phthalate

◆Polychlorinated biphenyl (PCB) concentration limits are less than two (2) parts per million (ppm).
Regulation (EC) No 1907/2006 ... concerning the Registration, Evaluation, Authorization and Restriction of Chemicals (REACH): No substance of Very High Concern of the “Candidate List” exceeds more than 0,1 % of the global weight of the delivered item (without packaging of the item)

7. Mechanical

Dimension W xH x D = 150 x 86 x 200mm.

8. Fan

14cm PWM FAN

9. Power Supply Connector Overuse Definition

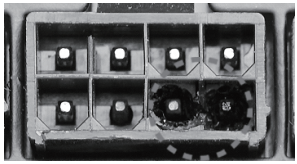

DE	Definition einer Überlastung des Netzanschlusses	TH	ข้อกำหนดการรองรับการใช้งานของตัวต่อจากพาวเวอร์ซัพพลาย
FR	Définition de l'utilisation excessive du connecteur d'alimentation électrique	KR	전원 공급 커넥터 과용 정의
ES	Definición de uso excesivo del conector de la Fuente de alimentación	JP	電力供給コネクタの使用限度超過に関する説明
IT	Definizione di uso eccessivo del connettore di alimentazione	CN	电源供应器接头过度使用定义
RU	Определение чрезмерной нагрузки на коннектор блока питания	TW	電源供應器接頭過度使用定義

开关电源供应器　有毒有害物质/元素及其化学含量表

部件名称	铅 (Pb)	汞 (Hg)	镉 (Cd)	六价铬 (Cr(VI))	多溴联苯 (PBB)	多溴二苯醚 (PBDE)
外壳	○	○	○	○	○	○
接头	○	○	○	○	○	○
风扇	○	○	○	○	○	○
电子卡	○	○	○	○	○	○
线材	○	○	○	○	○	○
螺丝	○	○	○	○	○	○
包材	○	○	○	○	○	○

本表格依据SJ/T 11364的规定编制

○：表示该有毒有害物质在该部件所有均质材料中的含量均在GB/T 26572 规定的限量要求以下。

×：表示该有毒有害物质至少在该部件的某一均质材料中的含量超出GB/T 26572 规定的限量要求。

10 产品合格证
检验员：检验
生产日期：见产品条码

1. 為了保護使用者及防火的目的，安裝此交換式電源供應器時，必須安裝於符合下列各項要求的外殼中，並且安裝妥善後，才可接上電源。
1-1. 外殼材質須為防火外殼。外壳材质须为防火外壳。
1-2. 外殼的上方及側邊之圓形開孔，最大內徑不可大於5mm。
1-3. 外殼的上方及側邊之長條型開孔，對角線距離不可大於5mm；若寬度小於1mm，則長度不受限制。
1-4. 外殼底部不可有開孔。外壳底部不可有开孔。

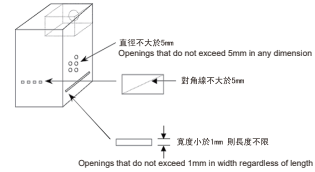

2. 本產品輸出含有危險能量，為避免操作時發生危險，須於裝入系統機殼並將所有設備安裝妥當後才可開啟電源。
3. 本產品之電源輸出非屬電力限制型電源，請連接使用具防火外殼之周邊，以避免火災危險發生。

BSMI ROHS 資訊
http://www.silverstonetek.com/downloads/PSU/RSD.pdf

This device complies with Part 15 of the FCC Rules.

Operation is subject to the following two conditions:

(1) this device may not cause harmful interference, and
(2) this device must accept any interference received, including interference that may cause undesired operation.

SST-HA3000R-PM

Model (safety certification):SST-AX3000MCPT-A

The equipment a Class | Switching Power Supply intended to use for information technology equipment or Audio and Video equipment.

本製品は3000Wの出力が可能な高出力電源となります。
・一般家庭のコンセント(1500W)の場合は、1300W未満の消費電力でご利用ください。
・日本国内向けに販売されている本製品の付属電源ケーブルは100V(最大15A)専用となります。
・本製品に200V用電源ケーブル、および100V/20A用電源ケーブルの同梱はございません。
・100V/15A以外の環境でご利用の際は、安全の為、必要な電源ケーブルを別途ご用意ください。

※付属の電源コードは当該製品専用です。他の機器に使用しないでください。

Please refer to SilverStone website for latest specifications updates.

SilverStone Technology Co., Ltd.

www.silverstonetek.com

support@silverstonetek.com

G11257800