kyoceradocumentsolutions.com

Operation Guide

PA2001w PA2000w
PA2001 PA2000

- Printer Driver & Utility Install
- Manual Download

Refer to the following URL.
https://kyocera.info/

Please scan the code on the right.
Or please check the following URL.
https://kyocera.inst-guide.com/t911f/

Thank you for purchasing this machine.

This Operation Guide is intended to help you operate the machine correctly, perform routine maintenance, and take simple troubleshooting measures as needed so that the machine can always be used in the optimum condition.

Please read this Operation Guide before using the machine.

We recommend the use of our genuine toner cartridges, which have passed rigorous quality control testing, to maintain quality.

The use of non-genuine toner cartridges may cause failure.

We will not be liable for any damages caused by the use of third party supplies in this machine.

A label is affixed to our genuine supplies, as shown below.

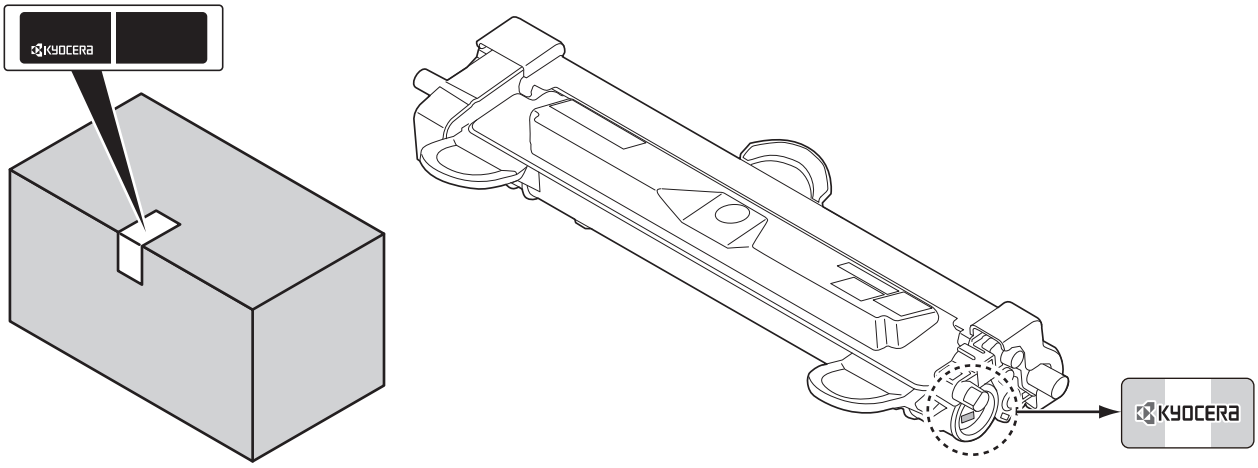

Checking the Equipment's Serial Number

The equipment's serial number is printed in the location shown in the figure.

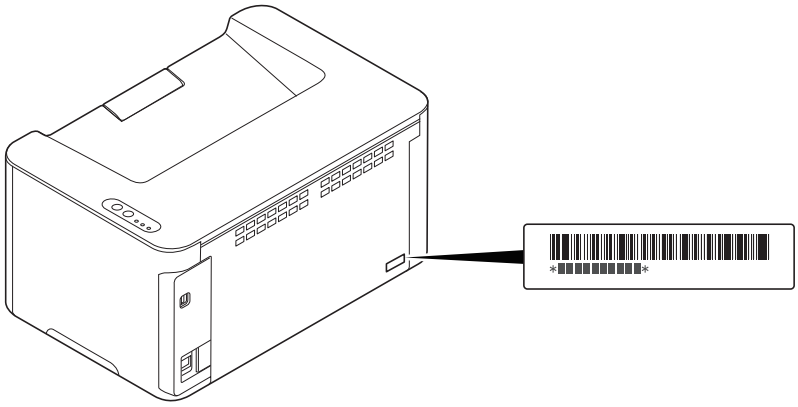

You'll need the equipment's serial number when contacting your Service Representative. Please check the number before contacting your Service Representative.

Contents

1 Legal and Safety Information 1-1

2 Machine Parts 2-1
Front Printer Components 2-1
Rear Printer Components 2-1
Operation Panel 2-2
Indicator States 2-3

3 Preparation 3-1
Connections 3-1
Power On/Off 3-2
Loading Paper 3-3
Installing Drivers and Utilities (For installation from the DVD (Product Library)) 3-12
Installing Drivers and Utilities (For installation from our website) 3-20
Uninstalling Software 3-29
Wireless Network Setup (PA2001w/PA2000w only) 3-30
Machine Settings 3-35
Configuration 3-42
Printing Reports 3-50

4 Printing 4-1
Printing from PC 4-1
Printing on Non-standard Sized Paper 4-2
Manual Duplex 4-4
Printer Driver Print Settings Screen 4-6
Displaying the Printer Driver Help 4-7
Changing the Default Printer Driver Settings (Windows 10) 4-7
Canceling Printing from a Computer 4-7

5 Useful Functions 5-1
Performing Data Masking 5-1
Using Remote Fax 5-2
Checking Counter 5-14
Using Log Settings 5-15

6 Maintenance 6-1
General Information 6-1
Toner Cartridge Replacement 6-1
Drum unit Replacement 6-4
Cleaning the Printer 6-7
Maintenance Menu 6-14
Prolonged Non-Use and Moving of the Printer 6-15

7 Troubleshooting 7-1
Solving Malfunctions 7-1
Indicator pattern when an error occurs 7-6
Error Messages 7-8
Clearing Paper Jams 7-9

8 Appendix 8-1
Specifications 8-1

1 Legal and Safety Information

Safety Conventions in This Guide

The sections of this guide and parts of the machine marked with symbols are safety warnings meant to protect the user, other individuals and surrounding objects, and ensure correct and safe usage of the machine. The symbols and their meanings are indicated below.

WARNING: Indicates that serious injury or even death may result from insufficient attention to or incorrect compliance with the related points.

CAUTION: Indicates that personal injury or mechanical damage may result from insufficient attention to or incorrect compliance with the related points.

Symbols

The △ symbol indicates that the related section includes safety warnings. Specific points of attention are indicated inside the symbol.

[General warning]

[Warning of high temperature]

The ⃠ symbol indicates that the related section includes information on prohibited actions. Specifics of the prohibited action are indicated inside the symbol.

[Warning of prohibited action]

[Disassembly prohibited]

The ● symbol indicates that the related section includes information on actions which must be performed. Specifics of the required action are indicated inside the symbol.

[Alert of required action]

[Remove the power plug from the outlet]

[Always connect the machine to an outlet with a ground connection]

Please contact your service representative to order a replacement if the safety warnings in this Operation Guide are illegible or if the guide itself is missing (fee required).

Environment

The service environmental conditions are as follows:

Temperature	10 to 32.5 °C
Humidity	10 to 80%

Avoid the following locations when selecting a site for the machine.

- Avoid locations near a window or with exposure to direct sunlight.
- Avoid locations with vibrations.
- Avoid locations with drastic temperature fluctuations.
- Avoid locations with direct exposure to hot or cold air.
- Avoid poorly ventilated locations.

If the floor is delicate against casters, when this machine is moved after installation, the floor material may be damaged.

During printing, some ozone is released, but the amount does not cause any ill effect to one's health. If, however, the machine is used over a long period of time in a poorly ventilated room or when making an extremely large number of prints, the smell may become unpleasant. To maintain the appropriate environment for print work, it is suggested that the room be properly ventilated.

Precautions for Use

Cautions when handling consumables

CAUTION

Do not attempt to incinerate parts which contain toner. Dangerous sparks may cause burns.

Keep parts which contain toner out of the reach of children.

If toner happens to spill from parts which contain toner, avoid inhalation and ingestion, as well as contact with your eyes and skin.

- If you do happen to inhale toner, move to a place with fresh air and gargle thoroughly with a large amount of water. If coughing develops, contact a physician.
- If you do happen to ingest toner, rinse your mouth with water and drink 1 or 2 cups of water to dilute the contents of your stomach. If necessary, contact a physician.
- If you do happen to get toner in your eyes, flush them thoroughly with water. If there is any remaining tenderness, contact a physician.
- If toner does happen to get on your skin, wash with soap and water.

Do not attempt to force open or destroy parts which contain toner.

Other precautions

Return the exhausted toner cartridge and waste toner box to your dealer or service representative. The collected toner cartridge and waste toner box will be recycled or disposed in accordance with the relevant regulations.

Store the machine while avoiding exposure to direct sunlight.

Store the machine in a place where the temperature stays below 40 °C while avoiding sharp changes of temperature and humidity.

If the machine will not be used for an extended period of time, remove the paper from the cassette, return it to its original package and reseal it.

Laser Safety (Europe)

Laser radiation could be hazardous to the human body. For this reason, laser radiation emitted inside this machine is hermetically sealed within the protective housing and external cover. In the normal operation of the product by user, no radiation can leak from the machine.

This machine is classified as Class 1 laser product under IEC/EN 60825-1:2014.

Regarding CLASS 1 laser products, information is provided on the rating label.

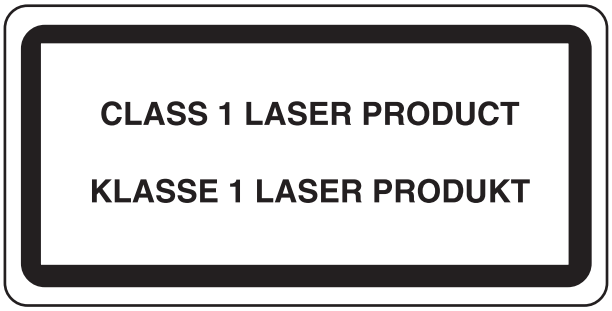

SAFETY OF LASER BEAM (USA)

1. Safety of laser beam

This machine has been certified by the manufacturer to Class 1 level under the radiation performance standards established by the U.S.DHHS (Department of Health and Human Services) in 1968. This indicates that the product is safe to use during normal operation and maintenance. The laser optical system, enclosed in a protective housing and sealed within the external covers, never permits the laser beam to escape.

2. The CDRH Act

A laser-product-related act was implemented on Aug. 2, 1976, by the Center for Devices and Radiological Health (CDRH) of the U.S. Food and Drug Administration (FDA). This act prohibits the sale of laser products in the U.S. without certification, and applies to laser products manufactured after Aug. 1, 1976. The label shown below indicates compliance with the CDRH regulations and must be attached to laser products marketed in the United States. On this machine, the label is on the rear.

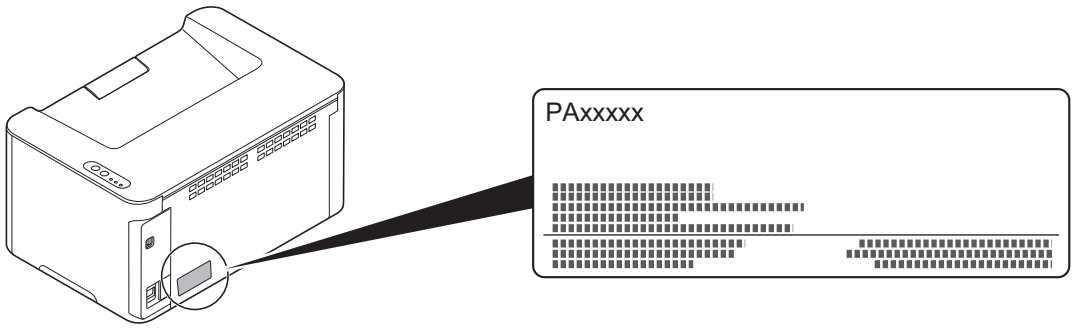

3. Maintenance

For safety of the service personnel, follow the maintenance instructions in the other section of this manual.

Safety Instructions Regarding the Disconnection of Power

Caution: The power plug is the main isolation device! Other switches on the equipment are only functional switches and are not suitable for isolating the equipment from the power source.

Attention: Le débranchement de la fiche secteur est le seul moyen de mettre l'appareil hors tension. Les interrupteurs sur l'appareil ne sont que des interrupteurs de fonctionnement: ils ne mettent pas l'appareil hors tension.

Compliance and Conformity

Hereby, KYOCERA Document Solutions Inc. declares that the radio equipment type PA2001w/PA2000w is in compliance with Directive 2014/53/EU.

The full text of the EU declaration of conformity is available at the following internet address:

https://www.kyoceradocumentsolutions.eu/index/service/dlc.html

Software Ver.	Frequency band in which the radio equipment operates:	Maximum radio-frequency power transmitted in the frequency band in which the radio equipment operates:
2014.12	2.4GHz	100mW

This equipment has been tested and found to comply with the limits for a Class B digital device, pursuant to Part 15 of the FCC Rules.

These limits are designed to provide reasonable protection against harmful interference in a residential installation. This equipment generates, uses and can radiate radio frequency energy and, if not installed and used in accordance with the instructions, may cause harmful interference to radio communications. However, there is no guarantee that interference will not occur in a particular installation. If this equipment does cause harmful interference to radio or television reception, which can be determined by turning the equipment off and on, the user is encouraged to try to correct the interference by one or more of the following measures:

- Reorient or relocate the receiving antenna.
- Increase the separation between the equipment and receiver.
- Connect the equipment into an outlet on a circuit different from that to which the receiver is connected.
- Consult the dealer or an experienced radio/TV technician for help.
- The use of a non-shielded interface cable with the referenced device is prohibited.

FCC Caution: Any changes or modifications not expressly approved by the party responsible for compliance could void the user's authority to operate this equipment.

This device complies with Part 15 of the FCC Rules. Operation is subject to the following two conditions: (1) This device may not cause harmful interference, and (2) this device must accept any interference received, including interference that may cause undesired operation.

IMPORTANT NOTE:

Radiation Exposure Statement:

This equipment complies with FCC radiation exposure limits set forth for an uncontrolled environment. This equipment should be installed and operated with minimum distance 20cm between the radiator & your body.

This transmitter must not be co-located or operating in conjunction with any other antenna or transmitter.

Industry Canada statement:

This device contains licence-exempt transmitter(s) / receiver(s) that complies with Innovation, Science and Economic Development Canada’s licence-exempt RSS (s). Operation is subject to the following two conditions:

(1)This device may not cause interference.

(2)This device must accept any interference, including interference that may cause undesired operation of the device.

The antenna(s) used for this transmitter must be installed to provide a separation distance of at least 20 cm from all persons and must not be co-located or operating in conjunction with any other transmitter.

Industry Canada ICES-003 Compliance Label: CAN ICES-3B/NMB-3B

* The above statements are valid only in the United States of America and Canada.

NOTE — Use shielded interface cables.

Radiation Exposure Statement:

This equipment complies with Canada radiation exposure limits set forth for an uncontrolled environment. This equipment should be installed and operated with minimum distance 20cm between the radiator & your body.

* These above statements are valid in the United States of America, Canada and EU.

For Singapore (PA2000w only)

Complies with
IMDA Standards
DB01846

Other precautions (for users in California, the United States)

Perchlorate Material - special handling may apply. See *www.dtsc.ca.gov/hazardouswaste/perchlorate*.

EN ISO 7779

Maschinenlärminformations-Verordnung 3. GPSGV, 06.01.2004: Der höchste Schalldruckpegel beträgt 70 dB (A) oder weniger gemäß EN ISO 7779.

EK1-ITB 2000

Das Gerät ist nicht für die Benutzung im unmittelbaren Gesichtsfeld am Bildschirmarbeitsplatz vorgesehen. Um störende Reflexionen am Bildschirmarbeitsplatz zu vermeiden, darf dieses Produkt nicht im unmittelbaren Gesichtsfeld platziert werden.

Wireless Connection (Mexico only)

The operation of this equipment is subject to the following two conditions:

(1) it is possible that this equipment or device may not cause harmful interference, and (2) this equipment or device must accept any interference, including interference that may cause undesired operation.

La operación de este equipo está sujeta a las siguientes dos condiciones:

(1) es posible que este equipo o dispositivo no cause interferencia perjudicial y (2) este equipo o dispositivo debe aceptar cualquier interferencia, incluyendo la que pueda causar su operación no deseada.

Security Precautions when Using Wireless LAN (If equipped)

Wireless LAN allows information to be exchanged between wireless access points instead of using a network cable, which offers the advantage that a LAN connection can be established freely within an area in which radio waves can be transmitted.

On the other hand, the following problems may occur if security settings are not configured, because radio waves can pass through obstacles (including walls) and reach everywhere within a certain area.

Secretly Viewing Communication Contents

A third person with malicious objectives may intentionally monitor radio waves and gain unauthorized access to the following communication contents.

- Personal information including ID, passwords, and credit card numbers
- Contents of email messages

Illegal Intrusion

A third party with malicious intent may gain unauthorized access to personal or company networks and conduct the following illegal actions.

- Extracting personal and confidential information (information leak)
- Entering into communication while impersonating a specific person and distributing unauthorized information (spoofing)
- Modifying and retransmitting intercepted communications (falsification)
- Transmitting computer viruses and destroying data and systems (destruction)

Wireless LAN cards and wireless access points contain built-in security mechanisms to address these problems and to reduce the possibility of these problems occurring by configuring the security settings of wireless LAN products when the product is used.

We recommend that customers take responsibility and use their judgment when configuring the security settings and that they ensure that they fully understand the problems that can occur when the product is used without configuring the security settings.

Limited Use of This Product (If equipped)

- Radio waves transmitted from this product may affect medical equipment. When using this product in a medical institution or in the vicinity of medical instruments, either use this product according to the instructions and precautions provided by the administrator of the institution or those provided on the medical instruments.
- Radio waves transmitted from this product may affect automatic control equipment including automatic doors and fire alarms. When using this product in the vicinity of the automatic control equipment, use this product according to the instructions and precautions provided on the automatic control equipment.
- If this product is used in devices that are directly related to service including airplanes, trains, ships, and automobiles or this product is used in applications requiring high reliability and safety to function and in devices requiring accuracy including those used in disaster prevention and crime prevention and those used for various safety purposes, please use this product after considering the safety design of the entire system including adoption of a failsafe design and redundancy design for reliability and safety maintenance of the entire system. This product is not intended for use in applications requiring high reliability and safety including aerospace instruments, trunk communication equipment, nuclear power control equipment, and medical equipment; hence, the decision as to whether to use this product in these applications needs to be fully considered and determined.

Sólo México (Mexico only)

Este equipo utiliza el módulo de interfaz de red inalámbrica modelo LBWA1ZZ1CA para conectarse a las redes Inalámbricas.

Legal Information

Copying or other reproduction of all or part of this guide without the prior written consent of KYOCERA Document Solutions Inc. is prohibited.

Regarding Trade Names

- Microsoft, Windows, Windows Server and Internet Explorer are registered trademarks or trademarks of Microsoft Corporation in the U.S.A. and/or other countries.
- PCL is a trademark of Hewlett-Packard Company.
- Adobe Acrobat, Adobe Reader and PostScript are trademarks of Adobe Systems, Incorporated.
- AppleTalk, Bonjour, Macintosh, and Mac OS are trademarks of Apple Inc., registered in the U.S. and other countries.
- All European language fonts installed in this machine are used under licensing agreement with Monotype Imaging Inc.
- Helvetica, Palatino and Times are registered trademarks of Linotype GmbH.
- ITC Avant Garde Gothic, ITC Bookman, ITC ZapfChancery and ITC ZapfDingbats are registered trademarks of International Typeface Corporation.
- UFST™ MicroType® fonts by Monotype Imaging Inc. are installed in this machine.
- This machine contains the software having modules developed by Independent JPEG Group.

All other brands and product names are registered trademarks or trademarks of their respective companies. The designations ™ and ® will not be used in this Operation Guide.

Monotype Imaging License Agreement

1 *Software* shall mean the digitally encoded, machine readable, scalable outline data as encoded in a special format as well as the UFST Software.

2 You agree to accept a non-exclusive license to use the Software to reproduce and display weights, styles and versions of letters, numerals, characters and symbols (*Typefaces*) solely for your own customary business or personal purposes at the address stated on the registration card you return to Monotype Imaging. Under the terms of this License Agreement, you have the right to use the Fonts on up to three printers. If you need to have access to the fonts on more than three printers, you need to acquire a multiuser license agreement which can be obtained from Monotype Imaging. Monotype Imaging retains all rights, title and interest to the Software and Typefaces and no rights are granted to you other than a License to use the Software on the terms expressly set forth in this Agreement.

3 To protect proprietary rights of Monotype Imaging, you agree to maintain the Software and other proprietary information concerning the Typefaces in strict confidence and to establish reasonable procedures regulating access to and use of the Software and Typefaces.

4 You agree not to duplicate or copy the Software or Typefaces, except that you may make one backup copy. You agree that any such copy shall contain the same proprietary notices as those appearing on the original.

5 This License shall continue until the last use of the Software and Typefaces, unless sooner terminated. This License may be terminated by Monotype Imaging if you fail to comply with the terms of this License and such failure is not remedied within thirty (30) days after notice from Monotype Imaging. When this License expires or is terminated, you shall either return to Monotype Imaging or destroy all copies of the Software and Typefaces and documentation as requested.

6 You agree that you will not modify, alter, disassemble, decrypt, reverse engineer or decompile the Software.

7 Monotype Imaging warrants that for ninety (90) days after delivery, the Software will perform in accordance with Monotype Imaging-published specifications, and the diskette will be free from defects in material and workmanship. Monotype Imaging does not warrant that the Software is free from all bugs, errors and omissions.

The parties agree that all other warranties, expressed or implied, including warranties of fitness for a particular purpose and merchantability, are excluded.

8 Your exclusive remedy and the sole liability of Monotype Imaging in connection with the Software and Typefaces is repair or replacement of defective parts, upon their return to Monotype Imaging.

In no event will Monotype Imaging be liable for lost profits, lost data, or any other incidental or consequential damages, or any damages caused by abuse or misapplication of the Software and Typefaces.

9 Massachusetts U.S.A. law governs this Agreement.

10 You shall not sublicense, sell, lease, or otherwise transfer the Software and/or Typefaces without the prior written consent of Monotype Imaging.

11 Use, duplication or disclosure by the Government is subject to restrictions as set forth in the Rights in Technical Data and Computer Software clause at FAR 252-227-7013, subdivision (b)(3)(ii) or subparagraph (c)(1)(ii), as appropriate. Further use, duplication or disclosure is subject to restrictions applicable to restricted rights software as set forth in FAR 52.227-19 (c)(2).

12 You acknowledge that you have read this Agreement, understand it, and agree to be bound by its terms and conditions. Neither party shall be bound by any statement or representation not contained in this Agreement. No change in this Agreement is effective unless written and signed by properly authorized representatives of each party. By opening this diskette package, you agree to accept the terms and conditions of this Agreement.

Open Source Software License

For the “Open Source Software license, go into the following URL and select Country > Product Name > OS > Language and then, refer to the “OSS_Notice” from the manual tab in the “Download”.

https://kyocera.info/

Energy Saving Control Function

The device comes equipped with a **Sleep** where printer functions remain in a waiting state but power consumption is reduced to a minimum after a certain amount of time elapses since the device was last used.

Sleep

The device automatically enters Sleep when 1 minute has passed since the device was last used. The amount of time of no activity that must pass before Sleep is activated may be lengthened. For details, refer to *Device Defaults Tab* on page *3-44*.

Resource Saving - Paper

For the preservation and sustainable use of forest resources, it is recommended that recycled as well as virgin paper certified under environmental stewardship initiatives or carrying recognised ecolabels, which meet EN 12281:2002* or an equivalent quality standard, be used.
This machine also supports printing on 64 g/m^2 paper. Using such paper containing less raw materials can lead to further saving of forest resources.

* : EN12281:2002 "Printing and business paper - Requirements for copy paper for dry toner imaging processes"

Your sales or service representative can provide information about recommended paper types.

Environmental benefits of "Power Management"

To reduce power consumption when idle, this machine is equipped with a power management function that automatically activates energy-saving mode when the machine is idle for a certain period of time.
Although it takes the machine a slight amount of time to return to READY mode when in energy-saving mode, a significant reduction in energy consumption is possible. It is recommended that the machine be used with the activation time for energy-saving mode set to the default setting.

Warranty (the United States and Canada)

PA2000w / PA2000
LASER PRINTER LIMITED WARRANTY

KYOCERA Document Solutions America, Inc. and KYOCERA Document Solutions Canada, Ltd. (both referred to as “KYOCERA”) warrant the Customer’s new laser Printer, and the new accessories installed with the initial installation of the Printer, against any defects in material and workmanship for a period of one year, or 50,000 copies/prints from date of installation, whichever first occurs. In the event the Printer or an accessory is found to be defective within the warranty period, KYOCERA’s only obligation and the Customer’s exclusive remedy shall be replacement of any defective parts or replacement of Printer at the digression of KYOCERA.

This warranty is valid only for the original retail purchaser (referred to as the “Customer”) of a new KYOCERA Printer in the United States of America or Canada, based upon the country of purchase.

In order to obtain performance of this warranty, the Customer must contact KYOCERA’s Diagnostic Center for assistance at 1-800-255-6482 or email at support@da.kyocera.com. KYOCERA’s Diagnostic Center will be able to identify the service issue to coordinate an Authorized KYOCERA Service Provider to repair or replace the Printer. Customer will need to provide proof of purchase of Printer and register the Printer to be covered by this warranty.

This warranty does not cover Printers or accessories, which: (a) have become damaged due to operator negligence, misuse, accidents, improper storage or unusual physical or electrical stress, (b) have used parts or supplies which are not genuine KYOCERA brand parts or supplies, or (c) have had the serial number modified, altered, or removed.

This warranty gives the Customer specific legal rights. The Customer may also have other rights, which vary from state to state, or province to province. Neither the seller, nor any other person, is authorized to extend the time period or expand this warranty on behalf of KYOCERA.

THIS WARRANTY IS MADE IN LIEU OF ALL OTHER WARRANTIES AND CONDITIONS, EXPRESS OR IMPLIED, AND KYOCERA SPECIFICALLY DISCLAIMS ANY IMPLIED WARRANTY OR CONDITION OF MERCHANTABILITY OR FITNESS FOR A PARTICULAR PURPOSE. THIS WARRANTY SHALL NOT EXTEND TO, AND KYOCERA SHALL NOT BE LIABLE FOR, ANY INCIDENTAL OR CONSEQUENTIAL DAMAGES WHICH MAY ARISE OUT OF THE USE OF, OR INABILITY TO USE, THE PRINTER.

KYOCERA Document Solutions America, Inc.
225 Sand Road, P.O. Box 40008
Fairfield, New Jersey 07004-0008, USA

KYOCERA Document Solutions Canada, Ltd.
6120 Kestrel Rd., Mississauga, ON L5T 1S8,
Canada

Guides Provided with the Machine

The following guides are provided with the machine. Refer to each guide as needed. The contents of the guides are subject to change without notice for the purpose of improvement of machine performance.

Quick Installation Guide	Describes the procedures for installation of the machine.
Safety Guide	Provides safety and cautionary information for the installation and use of the machine. Be sure to read this guide before using the machine.
Safety Guide (MA2001w/MA2000w/MA2001/MA2000/ PA2001w/PA2000w/PA2001/PA2000)	Describes the machine installation space, cautionary space, and other information. Be sure to read this guide before using the machine.

Product Library disc

Operation Guide (This Guide)	Describes how to load paper, basic print operations, and troubleshooting.
KYOCERA Client Tool User Guide	Describes how to use KYOCERA Client Tool. KYOCERA Client Tool is a software program that is installed on your computer to enable you to configure machine settings.
Printer Driver User Guide	Describes how to install the printer driver and use printer functionality.
KYOCERA Net Viewer User Guide	Describes how to monitor the network printing system with KYOCERA Net Viewer.

About the Operation Guide

This Operation Guide contains the following chapters:

1 Legal and Safety Information

This chapter explains precautions regarding use of the machine and trademark information.

2 Machine Parts

This chapter lists the names of different machine parts.

3 Preparation

This chapter explains how to start up the machine and load paper and use the application software included in the *Product Library* disc.

4 Printing

This chapter explains the printing procedure from an application software.

5 Useful Functions

This chapter explains the functions useful for work-from-home.

6 Maintenance

This chapter explains how to replace the toner cartridge and how to care for your printer.

7 Troubleshooting

This chapter explains how to handle printer problems that may occur, such as paper jams.

8 Appendix

This chapter lists the specifications of this printer.

Conventions in This Guide

This manual uses the following conventions.

Convention	Description	Example
Italic Typeface	Used to emphasize a key word, phrase or reference to additional information.	Refer to *Connections* on page *3-1*.
Bold	Used to denote buttons on the software.	To start printing, click **OK**.
Bracket Bold	Used to denote operation panel keys.	Printing resumes when **[Main Power]** ( ) is pressed.
Note	Used to provide additional or useful information about a function or feature.	**Note** Do not remove the toner cartridge from the carton until you are ready to install it in the printer.
Important	Used to provide important information.	**IMPORTANT** Take care not to touch the drum and transfer roller (gray) during cleaning.
Caution	Used to suggest mechanical damage as a result of an action.	**CAUTION** When removing a paper jam, pull the paper gently so as not to tear it. Torn pieces of paper are difficult to remove and may be easily overlooked, deterring the paper jam recovery.
Warning	Used to alert users to the possibility of personal injury.	**WARNING** If you are shipping the printer, remove and pack the toner cartridge and drum unit in a plastic bag and ship them separately from the printer.

2 Machine Parts

Front Printer Components

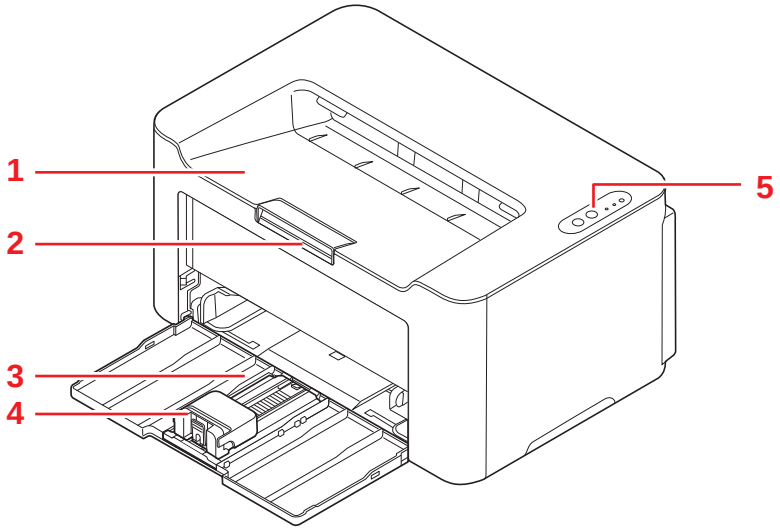

1 Top Tray
2 Paper Stopper
3 Cassette
4 Stopper
5 Operation Panel

Rear Printer Components

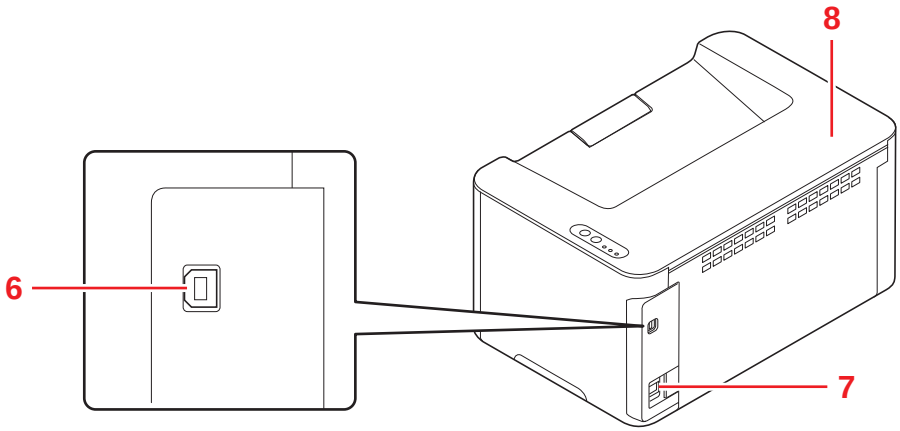

6 USB Interface Connector
7 Power Cord Connector
8 Top Cover

Operation Panel

PA2001w/PA2000w

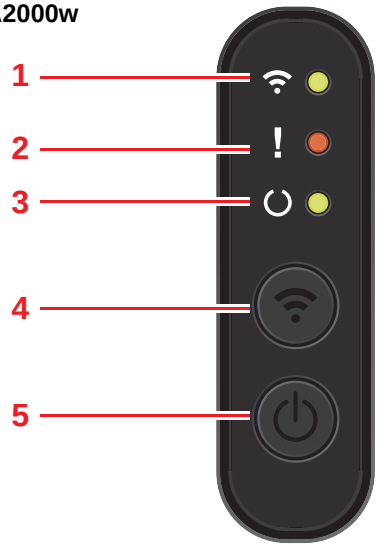

PA2001/PA2000

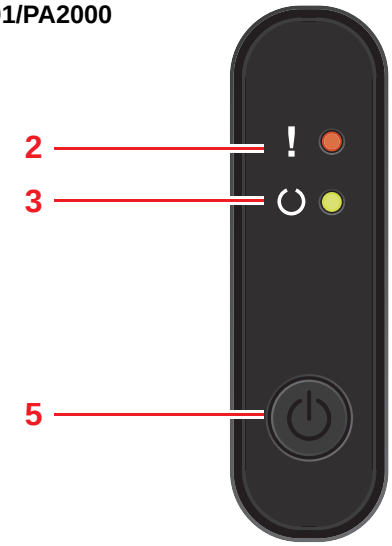

1 Wireless Network Indicators
2 Attention Indicator
3 Main Power Indicator
4 Wireless Network Key
5 Main Power Key

Keys

Refer to the following table for the name and description of the basic functions of each key.

Key	Status	Operation	Function
Wireless Network Key*	—	Press and hold for 1 second or longer.	Start the Wireless Network connection.
Main Power key	At Power off	Press once.	Power on.
	At Ready	Press once.	The Mode is shifted to the Report Print Mode
		Press and hold for 2 seconds.	Power off.
	At Report Print Mode	Press and hold for 5 seconds.	Prints the status page.
		Press and hold for 10 seconds.	Prints the network status page. (PA2001w/PA2000w only)
		Press and hold for 15 seconds.	Prints the event Log page.
	At Sleep	Press and release.	Wake Up form Sleep Mode.
		Press and hold for 2 seconds.	Power off.
	At Print	Press and release.	Pause the job being sent from the PC. Press and hold for 2 seconds or longer while pausing, the machine power is shut off.
		Press and hold for 2 second or longer.	Cancels the job being sent from the PC.
	At Error	Press once.	Clears the error.

* PA2001w/PA2000w only

Indicator States

The indicators are used to identify the status of the printer at any time. To identify the printer status, check the indicators on the printer and then refer to the table below to check the status of the machine.

Indicator	Description
	• Ready to Print (online state)
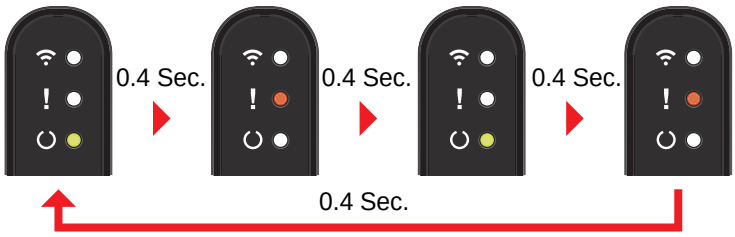	• Waiting • Adding toner • Cancelling data • Machine Boot State After Powering On
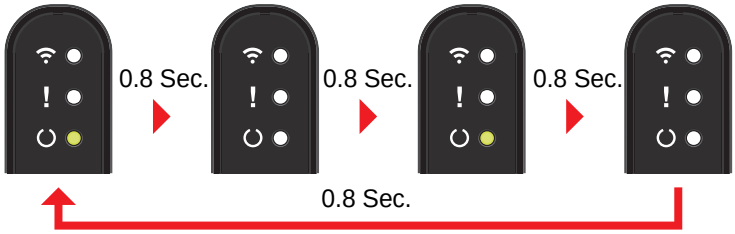	• Processing data • Accessing memory • Receiving data
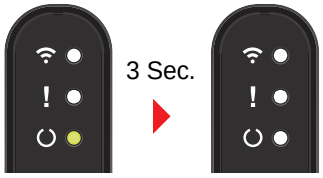	• Sleeping
	• Wireless Network connected
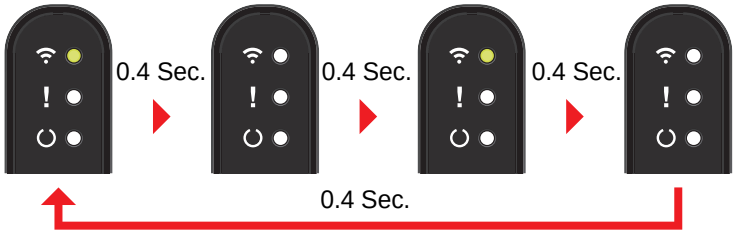	• In the process of connecting to Wireless Network

Note When a problem occurs on the machine, refer to *Indicator pattern when an error occurs* on page *7-6*. KYOCERA Client Tool (software bundled with the GX Driver) will provide more detailed information about the printer status. (Refer to *Machine Settings* on page *3-35*.)

3 Preparation

Connections

This section explains how to start up the printer.

Connecting the USB Cable

Follow the steps as below for connecting the USB cable.

1 Connect the USB cable to the printer's USB interface connector.

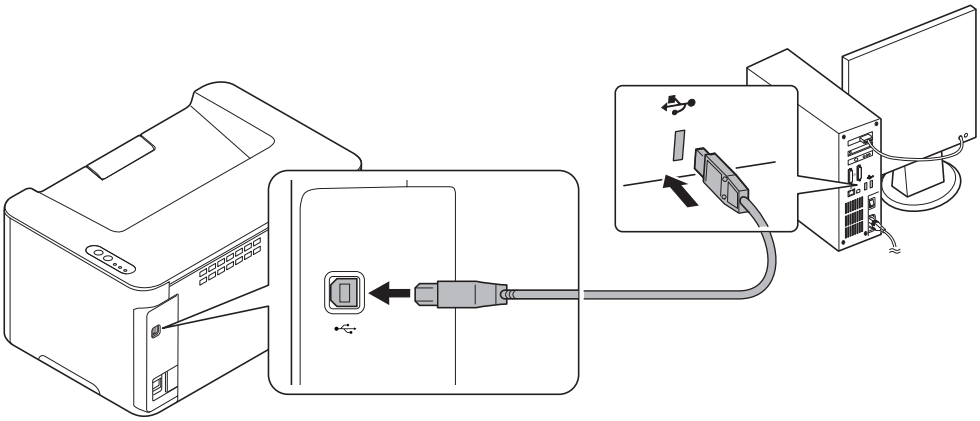

Note Use a USB cable with a rectangular Type A plug and a square Type B plug. The USB cable should be shielded and no longer than 5 meters (16 feet) long.

2 Connect the other end of the USB cable to the computer's USB interface connector.

Connecting the Power Cord

Install the printer close to an AC wall outlet. If an extension cord is used, the total length of the power cord plus extension should be 5 meters (16 feet) or less.

Note Only use the power cord supplied with the printer.

1 Connect the power cord to the power cord connector at the rear of the printer.

2 Connect the other end of the power cord to a power outlet.

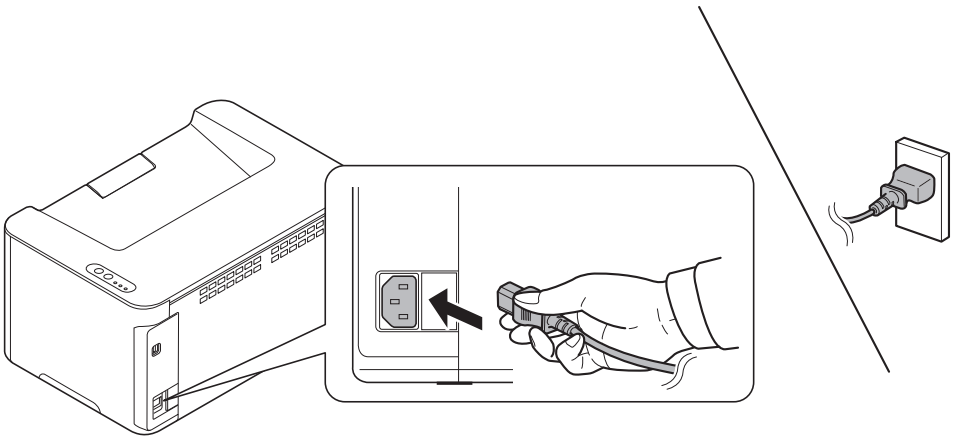

Power On/Off

Power On

1 Press [**Main Power**] (⏻). The machine begins to warm up.

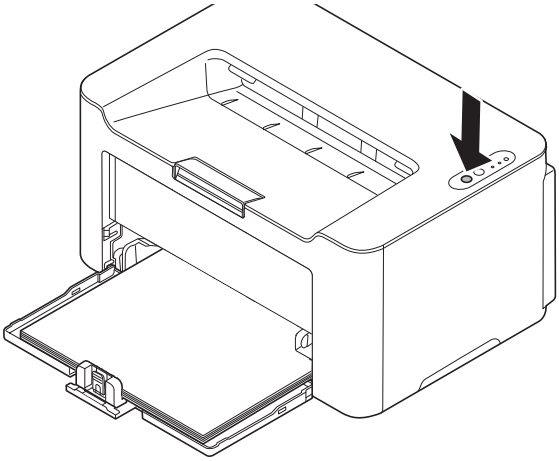

IMPORTANT If you install the toner cartridge and switch on the power, the **Main Power** indicator and **Attention** indicator will blink once simultaneously, and then blink alternately. Once the **Main Power** indicator lights, printer installation is complete.

Power Off

1 Press and hold [**Main Power**] (⏻) for 2 seconds or more.

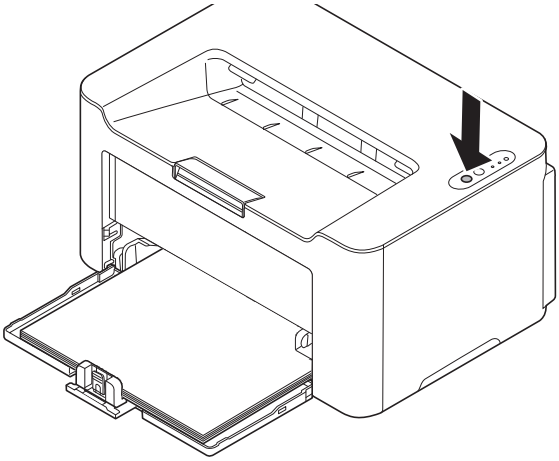

CAUTION If the machine will not be used for an even longer period of time (e.g. vacation), remove the power plug from the outlet as a safety precaution.

IMPORTANT Remove paper from the cassettes and seal it in the paper storage bag to protect it from humidity.

Loading Paper

General Guidelines

The machine is designed to print on standard copier paper, but it can also accept a variety of other types of paper within the limits specified below.

Note The manufacturer assumes no liability for problems that occur when paper not satisfying these requirements is used.

Selection of the right paper is important. Using the wrong paper can result in paper jams, curling, poor print quality, and paper waste, and in extreme cases can damage the machine. The guidelines given below will increase the productivity of your office by ensuring efficient, trouble-free printing and reducing wear and tear on the machine.

Paper Availability

Most types of paper are compatible with a variety of machines. Paper intended for xerographic copiers can also be used with the machine.

There are three general grades of paper: economy, standard, and premium. The most significant difference between grades is the ease with which they pass through the machine. This is affected by the smoothness, size, and moisture content of the paper, and the way in which the paper is cut. The higher the grade of paper you use, the less risk there will be of paper jams and other problems, and the higher the level of quality your printed output will reflect.

Differences between paper from different suppliers can also affect the machine's performance. A high-quality machine cannot produce high-quality results when the wrong paper is used. Low-priced paper is not economical in the long run if it causes printing problems.

Paper in each grade is available in a range of basis weights (defined later). The traditional standard weights are 60 to 120 g/m² (16 to 31.9b).

Paper Specifications

The following table summarizes the basic paper specifications. Details are given on the following pages:

Item	Specifications
Weight	65 to 105 g/m² (17 to 28 lb/ream)
Thickness	0.086 to 0.110 mm (3.4 to 4.3 mils)
Dimensional Accuracy	±0.7 mm (±0.0276 inches)
Squareness of Corners	90 ±0.2°
Moisture Content	4 to 6%
Pulp Content	80% or more

Minimum and Maximum Paper Sizes

The minimum and maximum paper sizes are as follows.

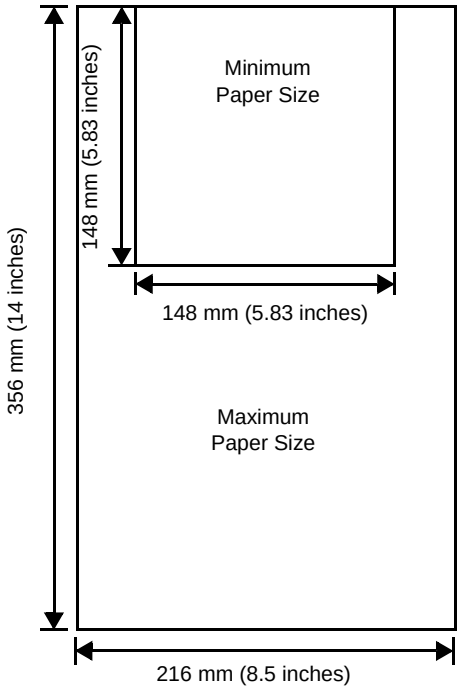

Selecting the Right Paper

This section describes the guidelines for selecting paper.

Condition

Avoid using paper that is bent at the edges, curled, dirty, torn, embossed, or contaminated with lint, clay, or paper shreds.

Use of paper in these conditions can lead to illegible printing and paper jams, and can shorten the life of the machine. In particular, avoid using paper with a surface coating or other surface treatment. Paper should have as smooth and even a surface as possible.

Composition

Do not use paper that has been coated or surface-treated and contains plastic or carbon. The heat of fusing can cause such paper to give off harmful fumes.

Bond paper should contain at least 80% pulp. Not more than 20% of the total paper content should consist of cotton or other fibers.

Paper Sizes

Cassette is available for the paper sizes shown below. The dimensional tolerances are ±0.7 mm for the length and width. The angle at the corners must be 90° ±0.2°.

- A4 (210 × 297 mm)
- A5 (Landscape) (210 × 148 mm)
- A5 (148 × 210 mm)
- Folio (210 × 330 mm)
- JIS B5 (182 × 257 mm)
- ISO B5 (176 × 250 mm)
- Letter (8.5 × 11 inches)
- Legal (8.5 × 14 inches)

- Executive (7.25 × 10.5 inches)
- Envelope C5 (162 × 229 mm)
- Oficio II (8.5 × 13 inches)
- 216 × 340 mm
- 16 K (197 × 273 mm)
- Custom*
  148 × 148 to 216 × 356 mm, 5.83 × 5.83 to 8.5 × 14 inches

  * If the length of custom paper is larger than 297 mm (11.69 inches), the machine can be substituted A4, Folio, Legal, and Oficio II as the standard paper size.

Smoothness

The paper should have a smooth, uncoated surface. Paper with a rough or sandy surface can cause blank spaces in the printed output. Paper that is too smooth can cause multiple feeding and fogging problems. (Fogging is a gray background effect.)

Basis weight

Basis weight is the weight of paper expressed in grams per square meter (g/m²). Paper that is too heavy or too light may cause feed errors or paper jams as well as premature wear of the product. Uneven weight of paper, namely uneven paper thickness may cause multiple-sheet feeding or print quality problems such as blurring because of poor toner fusing.

The recommended basis weight is between 65 and 105 g/m² (17 to 28 lib/ream).

Paper Weight Equivalence Table

The paper weight is listed in pounds (lb) and metric grams per square meter (g/m²). The shaded part indicates the standard weight.

Europe Metric Weight (g/m²)	U. S. Bond Weight (lb)
65	17
74	19
75	20
90	21
91	24
105	28

Thickness

The paper used with the machine should be neither extremely thick nor extremely thin. If you are having problems with paper jams, multiple feeds, and faint printing, the paper you are using may be too thin. If you are having problems with paper jams and blurred printing the paper may be too thick. The correct thickness is 0.086 to 0.110 mm (3.4 to 4.3 mils).

Moisture Content

Moisture content is defined as the percent ratio of moisture to the dry mass of the paper. Moisture can affect the paper's appearance, feed ability, curl, electrostatic properties, and toner fusing characteristics.

The moisture content of the paper varies with the relative humidity in the room. When the relative humidity is high and the paper absorbs moisture, the paper edges expand, becoming wavy in appearance. When the relative humidity is low and the paper loses moisture, the edges shrink and tighten, and print contrast may suffer.

Wavy or tight edges can cause jams and alignment anomalies. The moisture content of the paper should be 4 to 6%.

To ensure correct moisture content, it is important to store the paper in a controlled environment. Some tips on moisture control are:

- Store paper in a cool, dry location.
- Keep the paper in its wrapping as long as possible. Re-wrap paper that is not in use.
- Store paper in its original carton. Place a pallet etc. under the carton to separate it from the floor.
- After removing paper from storage, let it stand in the same room as the machine for 48 hours before use.

- Avoid leaving paper where it is exposed to heat, sunlight, or damp.

Other Paper Properties

Porosity: Indicates the density of paper fiber.

Stiffness: Limp paper may buckle in the machine, resulting in paper jams.

Curl: Most paper naturally tends to curl one way if left unpacked. When paper passes through the fixing unit, it curls upward a little. To produce flat printouts, load the paper so that the upward pressure from the machine can correct their curling.

Electrostatic discharge: During the printing process the paper is electrostatically charged to attract the toner. The paper must be able to release this charge so that printed sheets do not cling together in the Output Tray.

Whiteness: The contrast of the printed page depends on the whiteness of the paper. Whiter paper provides a sharper, brighter appearance.

Quality control: Uneven sheet size, corners that are not square, ragged edges, welded (uncut) sheets, and crushed edges and corners can cause the machine to malfunction in various ways. A quality paper supplier should take considerable care to ensure that these problems do not occur.

Packaging: Paper should be packed in a sturdy carton to protect it from damage during transport. Quality paper obtained from a reputable supplier is usually correctly packaged.

Specially treated paper: We do not recommend printing onto the following types of paper, even if it conforms to the basic specifications. When you use these kinds of paper, purchase a small amount first as a sample to test.

- Glossy paper
- Watermarked paper
- Paper with an uneven surface
- Perforated paper

Special Paper

The following types of special paper can be used:

- Preprinted paper
- Bond paper
- Recycled paper
- Rough paper
- Letterhead paper
- Colored paper
- Prepunched paper
- High-quality paper

Use paper that is sold specifically for use with copiers or printers (heat-fusing type).

Since the composition and quality of special paper vary considerably, special paper is more likely than white bond paper to give trouble during printing. No liability will be assumed if moisture and so forth given off during printing on special paper causes harm to the machine or operator.

Note Before purchasing any type of special paper, test a sample on the machine and check that printing quality is satisfactory.

Colored Paper

Colored paper should satisfy the same conditions as white bond paper. Refer to *Paper Specifications* on page *3-3*. In addition, the pigments used in the paper must be able to withstand the heat of fusing during the printing process (up to 200°C or 392°F).

Preprinted Paper

Preprinted paper should satisfy the same conditions as white bond paper. Refer to *Paper Specifications* on page *3-3*. The preprinted ink must be able to withstand the heat of fusing during the printing process, and must not be affected by silicone oil.

Do not use paper with any kind of surface treatment, such as the type of paper commonly used for calendars.

Recycled Paper

Select recycled paper that meets the same specifications as the white bond paper except for whiteness. Refer to *Paper Specifications* on page *3-3*.

Note Before purchasing recycled paper, test a sample on the machine and check that the printing quality is satisfactory.

Paper Type

The machine is capable of printing under the optimum setting for the type of paper being used.

Not only can preset paper types be selected, but it is also possible for you to define and select customized paper types. Paper type can be changed using the printer driver and KYOCERA Client Tool. The following types of paper can be used.

Paper Type	Paper Weight Displayed in KYOCERA Client Tool
Plain	Normal 2
Preprinted	Normal 2
Bond	Normal 3
Recycled	Normal 2
Rough	Normal 3
Letterhead	Normal 2
Color	Normal 3
Prepunched	Normal 2
High quality	Normal 2
Custom 1 (to 8)*	Normal 2

* This is a paper type defined and registered by the user. Up to eight types of user settings may be defined. For more information, refer to *KYOCERA Client Tool User Guide*.

Preparing the Paper

After removing paper from the packaging, fan through the sheets to separate them prior to loading.

If using paper that has been folded or is curled, straighten it prior to loading. Failure to do so may result in a paper jam.

IMPORTANT Ensure paper is not stapled and clips are removed.

You should not use inkjet printer paper or any paper with a special surface coating. (Such papers may cause paper jams or other faults.)

Check that no foreign matter is adhering to the surfaces or edges of paper. Otherwise, foreign matter may cause printing problems.

Loading Paper into Cassette

150 sheets of A4 or Letter paper (80 g/m²) may be loaded into the cassette.

1 Open the front cover.

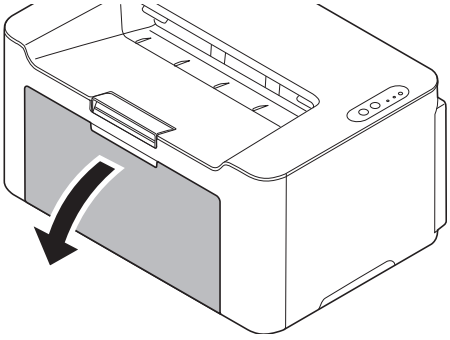

If necessary, open the paper stopper shown in the figure.

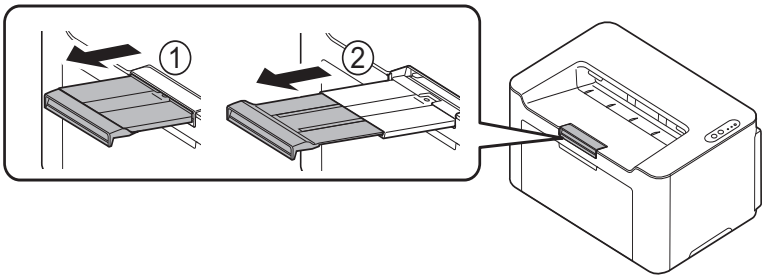

When using paper larger than A5 (Landscape), remove the stopper from the paper length guide. Keep the removed Stopper carefully.

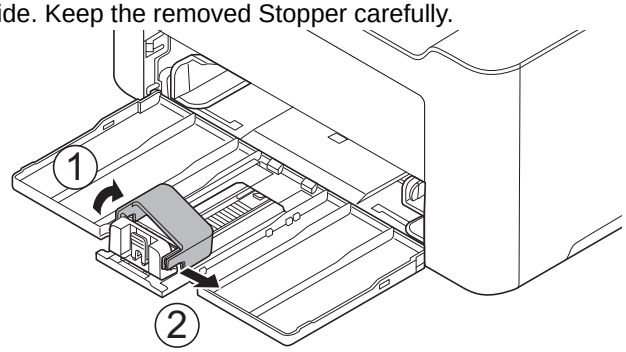

2 Adjust the position of the width guides located on the left and right sides of the cassette.

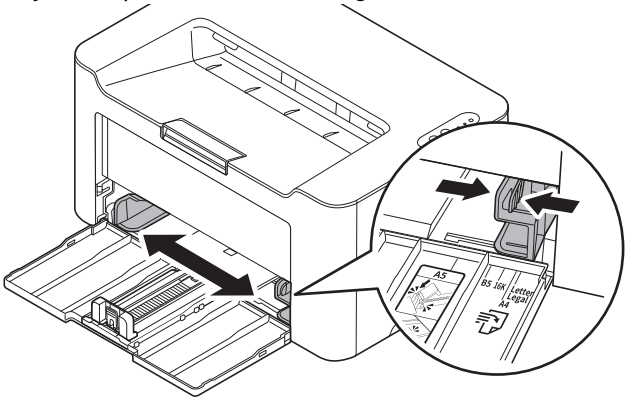

Note Paper sizes are marked on the cassette.

3 Adjust the paper length guide to the paper size required.

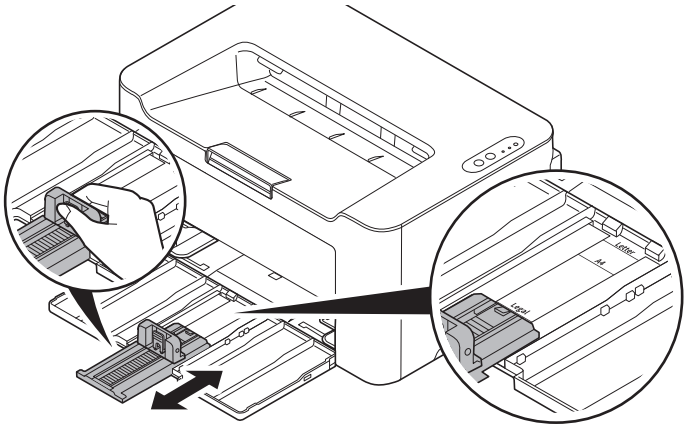

Note When using A4/Letter or larger paper, pull out the paper length guide.

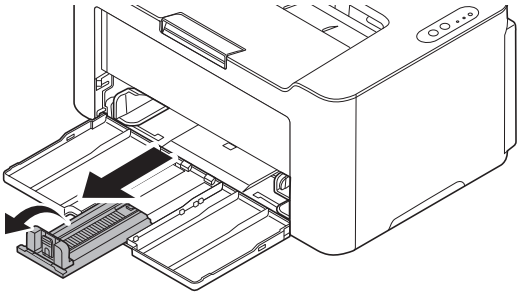

When using A5 (Landscape) paper, attach the stopper.

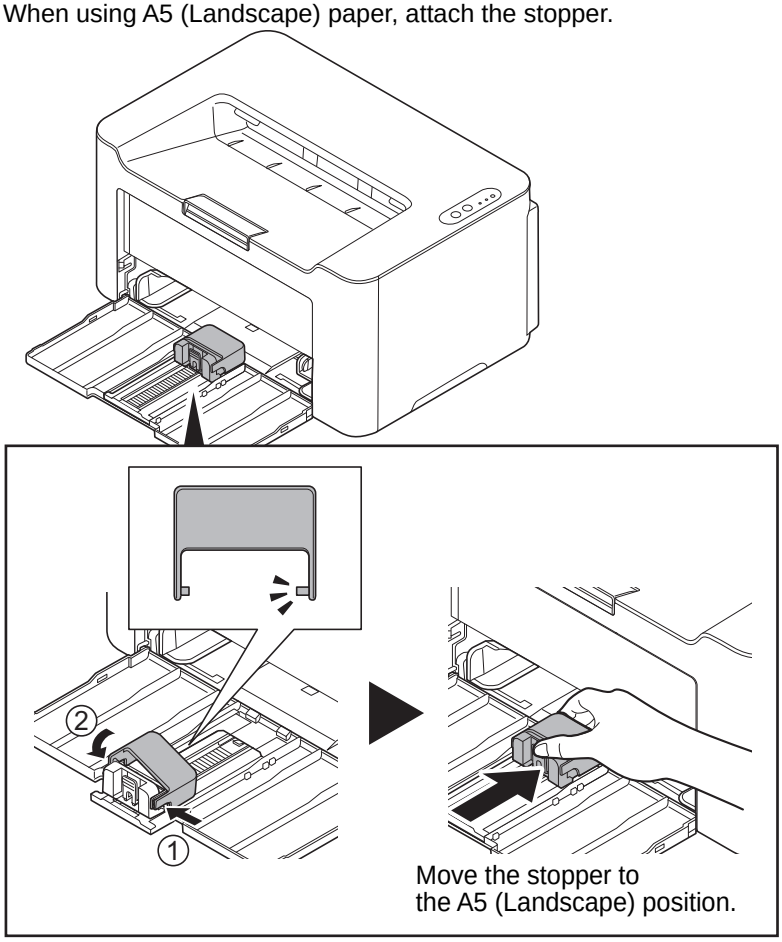

4 Load the paper all the way in the cassette until the paper touches the far inner side. Ensure the side to be printed is facing up and the paper is not folded, curled, or damaged.

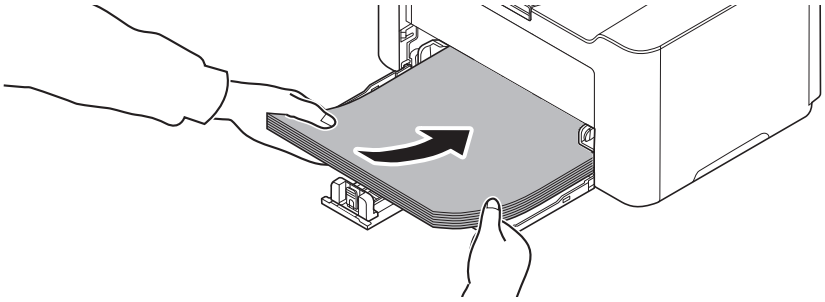

IMPORTANT Adjust so that there is no gap between the paper length guide and the paper.

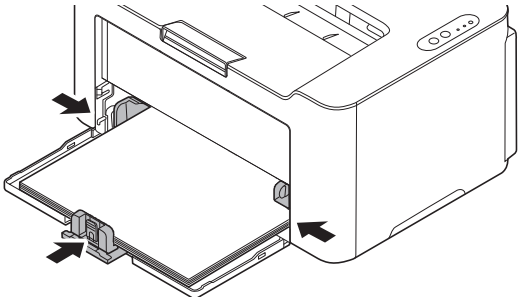

Note Load an amount of paper that fits under (does not contact) the tabs on the width guides.

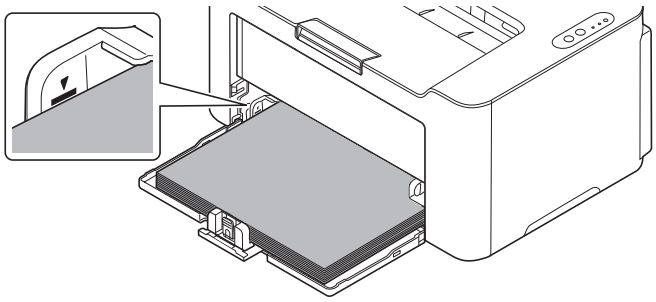

When using A5 (Landscape) paper, load the paper as shown in the illustration.

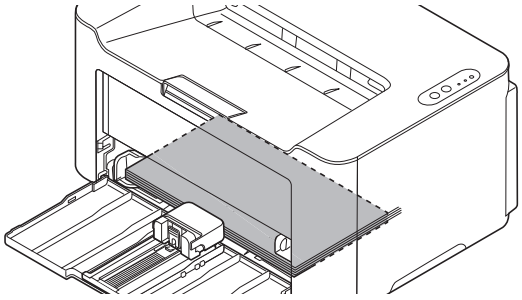

Note When using A5 (Landscape) paper, do not close the front cover.

5 Specify the paper size and type for the cassette using KYOCERA Client Tool. For more information, refer to *Configuration* on page *3-42*.

Note Set the same paper size to the paper size that is set on the machine.

Installing Drivers and Utilities (For installation from the DVD (Product Library))

This section explains how to configure machine settings and install the software required for use as a machine. Ensure the machine is plugged in and connected to the PC before installing the software from the *Product Library* disc.

Note Install the software when the machine status is online.

Software

The following software can be installed from the provided *Product Library* disc.

●: Installed standard. ○: Installed if selected.

Software	Function	Description	Installation Method		Reference Page
			Quick Installer	Custom Installer	
GX DRIVER	Print	Driver for printing files on a computer using the machine. This printer driver enables full use of the machine's features.	●	○	*Printer Driver User Guide*
KYOCERA Net Viewer	Utility	Utility that enables the machine to be monitored when connected to a network.	—	○	*KYOCERA Net Viewer User Guide*
KYOCERA Client Tool		Utility that enables current and all supported devices status, features and settings to be accessed. When KYOCERA Client Tool is installed, the following utilities are installed. • Status Monitor (page *3-39*) • Configuration (page *3-42*) • Maintenance Menu (page *6-14*)	●	○	3-36

Note Installation on Windows must be done by a user logged on with administrator privileges.
For installation from our website, refer to *Installing Drivers and Utilities (For installation from our website)* on page *3-20*.

Installing the Software in Windows

If you are connecting this machine to a Windows PC, follow the next steps to install the software. The example shows you how to connect your machine to a Windows 10.

Note In Windows operating systems, you must be logged in with administrator privileges to install the software.

You can use either Quick Installer or Custom Installer to install the software. Quick Installer automatically detects connected machines and installs the required software. Use Custom Installer if you want to specify the printer port and select the software to be installed.

1 Turn on the computer and start up Windows.

If the Welcome to the **Found New Hardware Wizard** screen displays, select **Cancel**.

2 Insert the *Product Library* disc supplied with the machine into the optical drive.

The installation program launches.

Note If the software install wizard does not launch automatically, open the *Product Library* disc window in Windows Explorer and double-click **Setup.exe**.

3 Read the License Agreement. Click **Agree**.

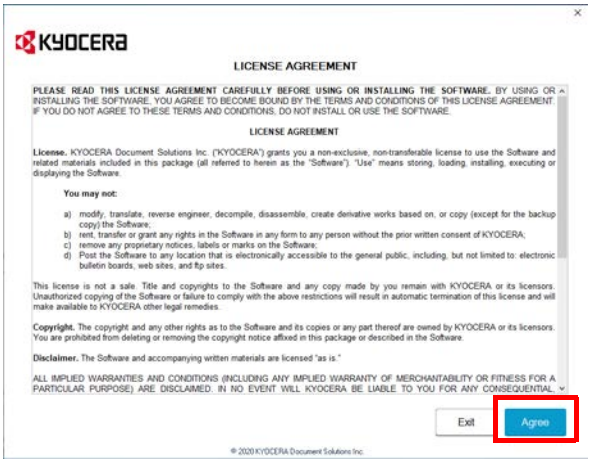

The software install wizard starts up.

From this point, the procedure differs depending on your version of Windows and your connection method. Proceed to the correct procedure for your connection type.

- Quick Installer
- Custom Installer

Quick Installer

In Quick Installer, the installer automatically detects the machine when it is turned on. Use Quick Installer for standard connection methods. (The below screens show an example that the machine is connected to a computer via USB.)

1 Select **Quick Installer**.

2 Select **USB Connection** or **Wireless Connection**. The installer detects the machine.

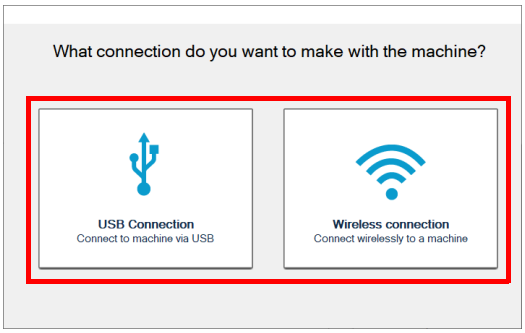

If the installer does not detect a print system, check that the print system is connected via USB or a network and that it is turned on. Then click ⟳ (**Refresh**) to search print system again. Wireless Connection is only possible with the PA2001w/PA2000w.

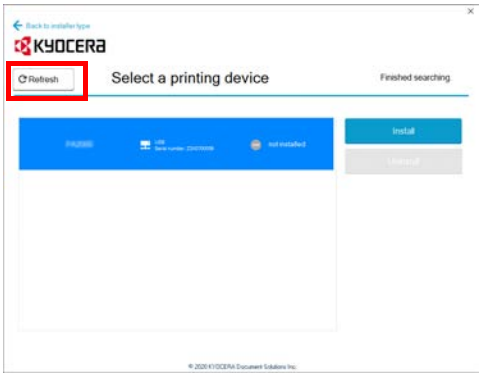

3 Select the device you want to install, and click **Install**.

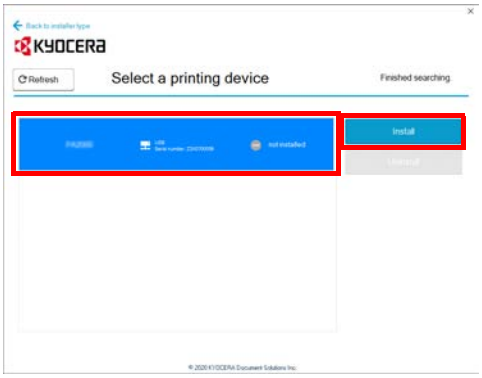

Note If the Found New Hardware Wizard appears, click **Cancel**. If a hardware installation warning message appears, click **Continue**.

If the Windows security window appears, click **Install this driver software anyway**.

4 A message appears saying that your software is ready to use.

Click **Save and exit installer** to exit the installation wizard.

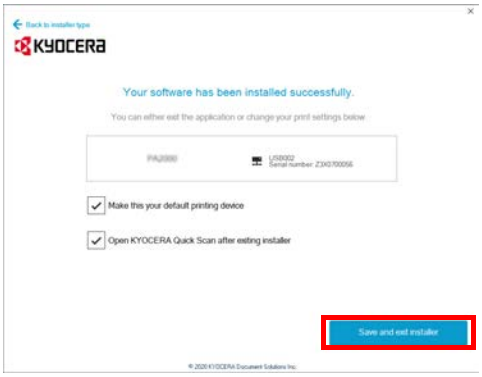

This completes the software installation procedure.

Custom Installer

Use Custom Installer if you want to specify the printer port and select the software to be installed. (The below screens show an example that the machine is connected to a computer via USB.)

1 Select Connection method for Custom Installer.

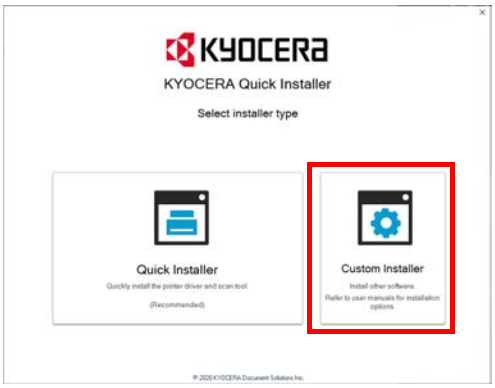

2 Select **Custom Install**.

3 Select the device to be installed, and click the arrow button to move it to the **Products to Install** list.

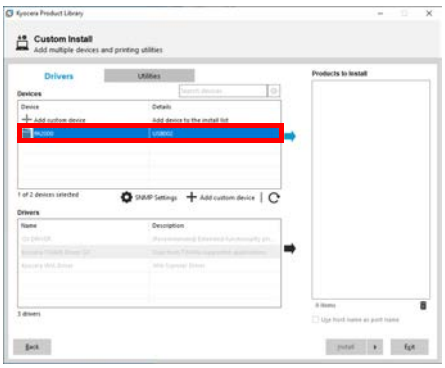

4 Select the software to be installed, and click the arrow button to move it to the **Products to Install** list.

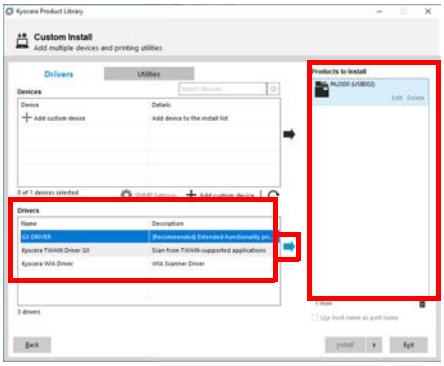

5 Click **Utility** tab and select the utility to be installed.

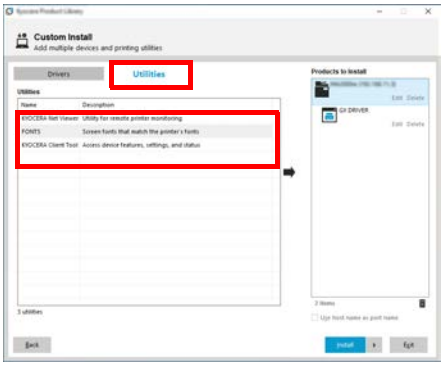

6 Click **Install**.

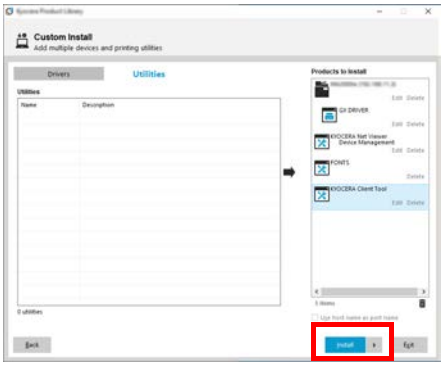

7 A message appears saying that your software is ready to use. To print a test page, select the **Print a test page** checkbox and select the machine.

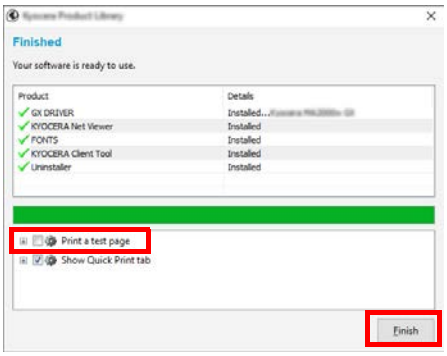

Click **Finish** to exit the installation wizard.

This completes the software installation procedure.

Installing Software in Mac Computer

The machine's printer functionality can be used by a Mac computer.

Note Installation on Mac OS must be done by a user logged on with administrator privileges. For installation from our website, refer to *Installing Software in Mac Computer* on page *3-26*.

1 Insert the DVD.

Double-click the **Kyocera** icon.

2 Display the screen.

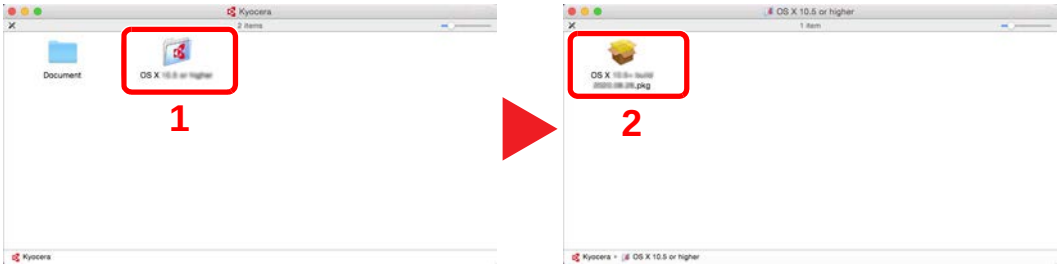

Double-click **OS X x.x** depending on your Mac OS version.

3 Install the Printer Driver.

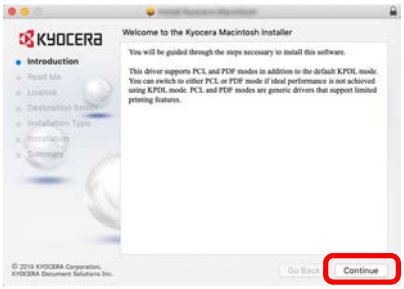

Install the printer driver as directed by the instructions in the installation software.

This completes the printer driver installation.

If a USB connection is used, the machine is automatically recognized and connected.

(PA2001w/PA2000w only)

If an IP connection is used, the settings below are required.

4 Open System Preferences and add the printer.

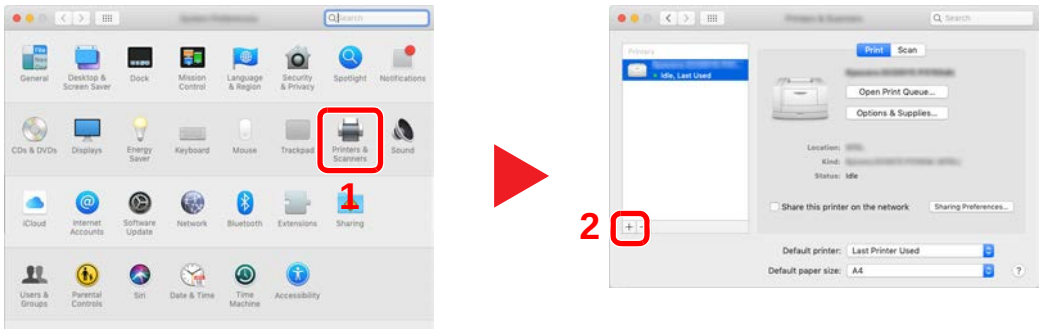

5 Select **Default** and click the item that appears in "Name" and then select the driver in "Use".

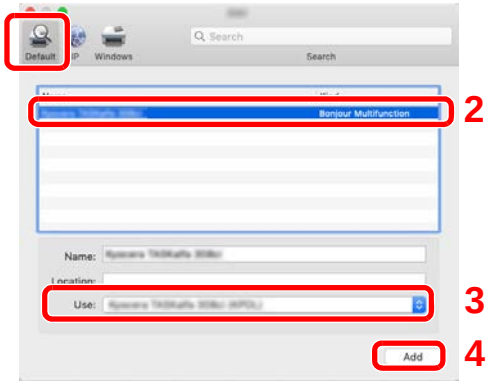

6 The selected machine is added.

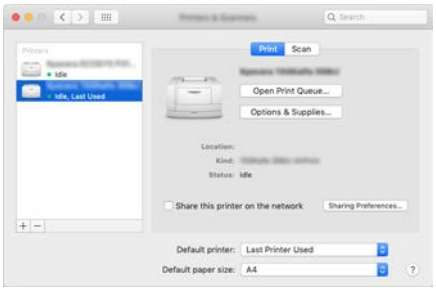

Note When using an IP connection, click the IP icon for an IP connection and then enter the host name or IP address. The number entered in "Address" will automatically appear in "Name". Change if needed.

Installing Drivers and Utilities (For installation from our website)

To use printer function, download and install prerequisite softwares from our website (https://kyocera.info/). Ensure the machine is plugged in and connected to the PC before installing the software.

Note Install the software when the machine status is online.

Software

Software	Function	Description	Recommended software	Reference Page
GX DRIVER	Print	Driver for printing files on a computer using the machine. This printer driver enables full use of the machine's features.	●	*Printer Driver User Guide*
KYOCERA Net Viewer	Utility	Utility that enables the machine to be monitored when connected to a network.	—	*KYOCERA Net Viewer User Guide*
KYOCERA Client Tool		Utility that enables current and all supported devices status, features and settings to be accessed. When KYOCERA Client Tool is installed, the following utilities are installed. • Status Monitor (page *3-39*) • Configuration (page *3-42*) • Maintenance Menu (page *6-14*)	●	3-35

Note Installation on Windows must be done by a user logged on with administrator privileges.
For installation from the DVD (Product Library), refer to *Installing Drivers and Utilities (For installation from the DVD (Product Library))* on page *3-12*.

Installing the Software in Windows

Downloading and installing from the website

Download and install a software from our website.

1 Enter "https://kyocera.info/" to the browser's address bar or location bar.

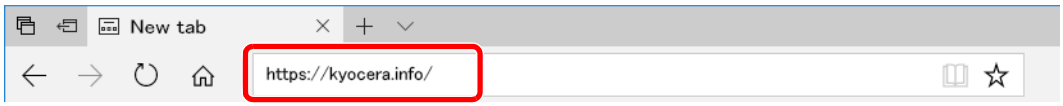

2 Enter and search the product name, and select this product from the candidate list.

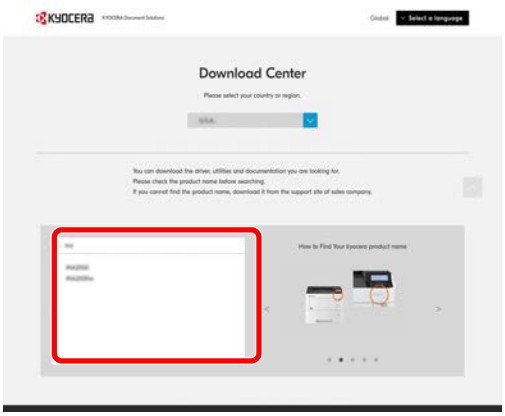

3 Change the selected operating system and its language setting as needed.

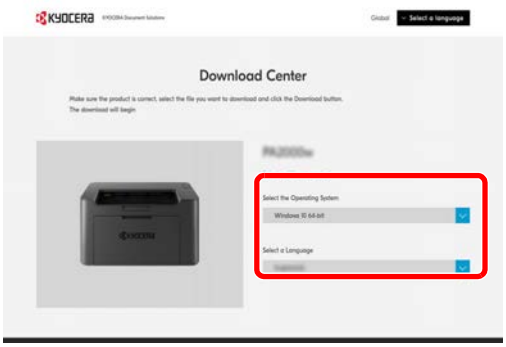

4 Recommended tab, Driver tab or Utility tab > of the software you want to download

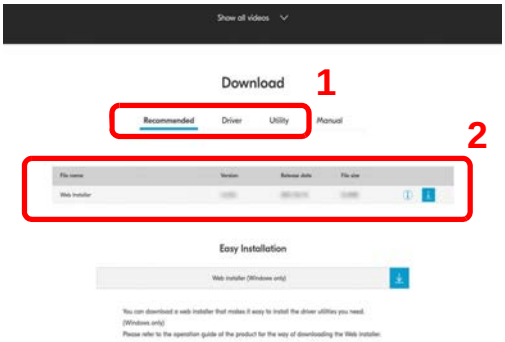

5 Read the license agreement.

Click **Agree to contract and download** if there is no problem. An installer of the selected software will be downloaded.

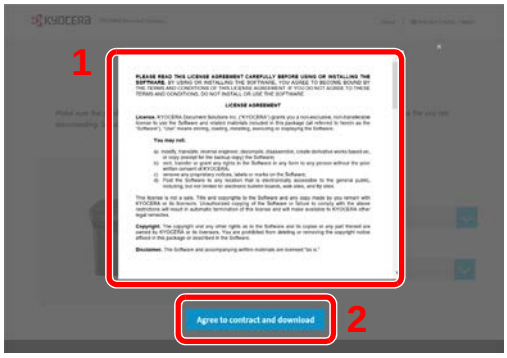

6 Double-click the downloaded installer to launch.

Follow the guidance on the screen to install the software.

Note Installation on Windows must be done by a user logged on with administrator privileges. If the user account management window appears, click [**Yes**] ([**Allow**]).

Using the web installer

Install a software by using a web installer downloaded from our website.

1 Launch a web browser.

2 Enter "https://kyocera.info/" to the browser's address bar or location bar.

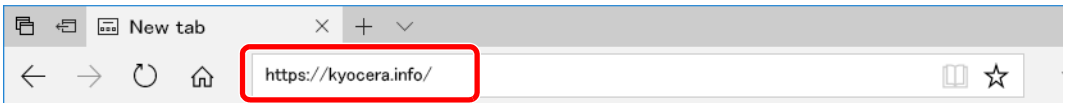

3 Enter and search the product name, and select this product from the candidate list.

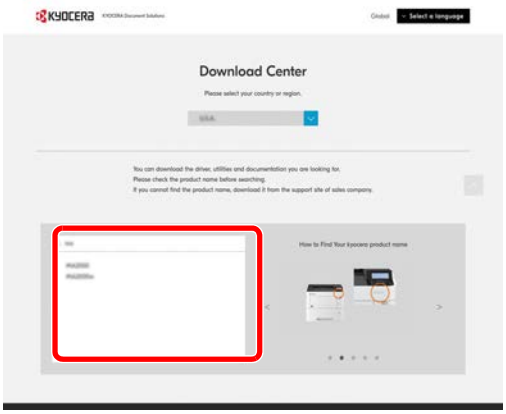

4 Change the selected operating system and its language setting as needed.

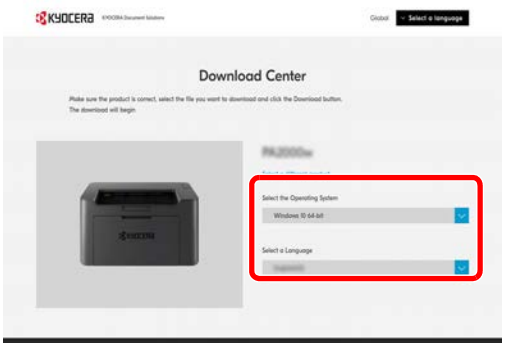

5 Click "Web installer" .

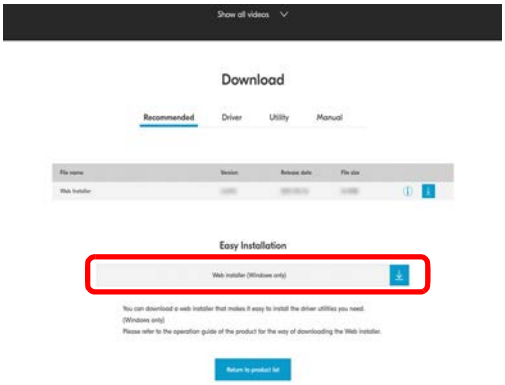

6 Read the license agreement.

Click **Agree to contract and download** if there is no problem. A web installer will be downloaded.

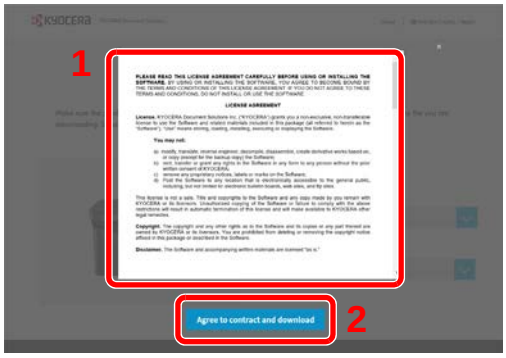

7 Double-click the downloaded installer to launch.

Note Installation on Windows must be done by a user logged on with administrator privileges. If the user account management window appears, click **Yes** (**Allow**).

8 Read the license agreement.

Click **Accept** if there is no problem.

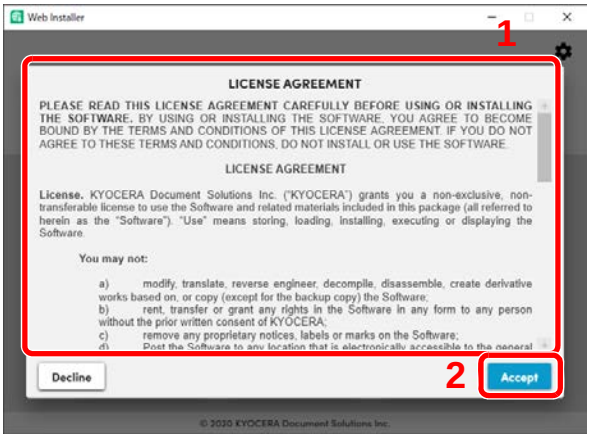

9 Click **Install**.

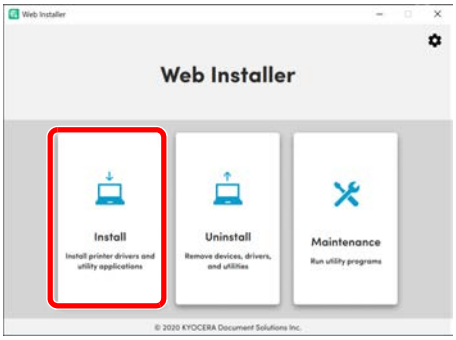

10 Select a model and click **Next**.

Note The machine cannot be detected unless it is on. If the computer fails to detect the machine, verify that it is connected to the computer via a network or USB cable.
If a desired device is not displayed, select **Add custom device** to directly select the device you want to use.

11 Select softwares you want to install.

Note Softwares recommended to install have ☑ in their checkboxes by default. Configure them as needed.

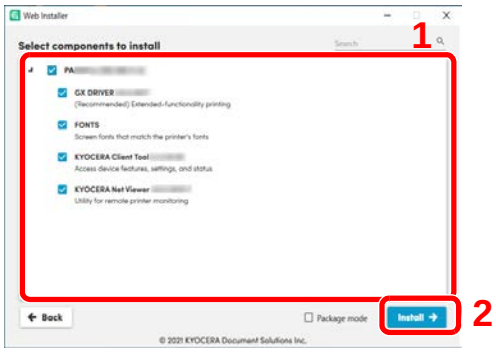

12 Click **Install**.

When **Install** is clicked, a screen which asks for cooperation for data collection may appear. Select one of the answer choices and click **OK**.

Note If the Windows security window appears, click **Install this driver software anyway**.
If the Microsoft .NET Framework installation screen is displayed, click **Yes** to install it.

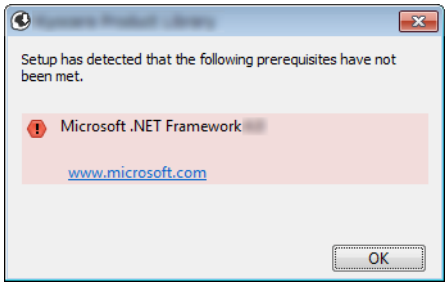

13 Finish the installation.

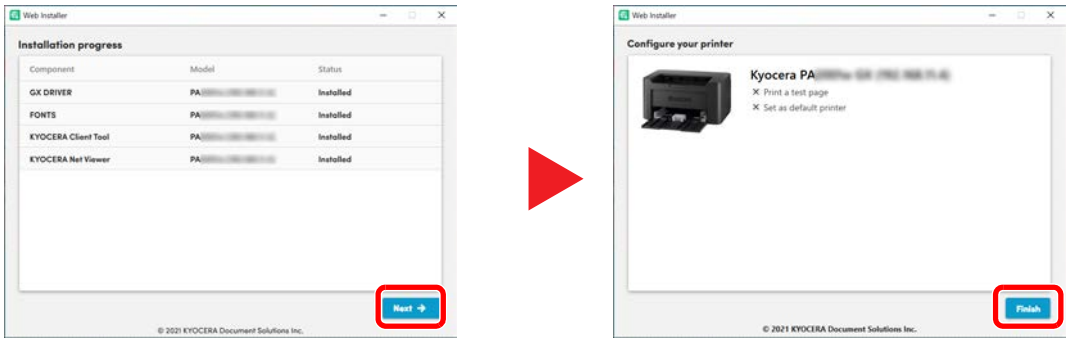

Click **Next** > **Finish** to finish the installation wizard.

If a system restart message appears, restart the computer by following the screen prompts. This completes the printer driver installation procedure.

Installing Software in Mac Computer

The machine's printer functionality can be used by a Mac computer.

Note Installation on Mac OS must be done by a user logged on with administrator privileges.
For installation from the DVD (Product Library), refer to *Installing Software in Mac Computer* on page *3-18*.

Downloading and installing from the website

Download and install a software from our website.

1 Launch a web browser.

2 Enter "https://kyocera.info/" into the address bar.

3 Enter and search the product name, and select this product from the candidate list.

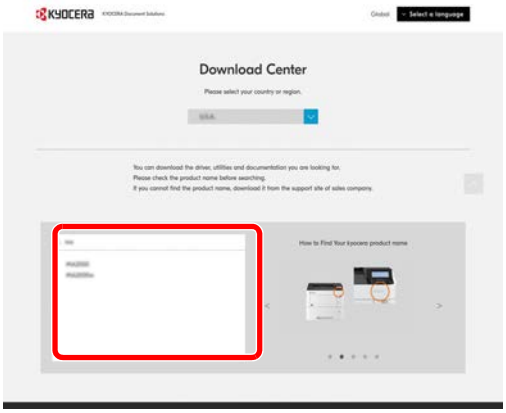

4 Change the selected operating system and its language setting as needed.

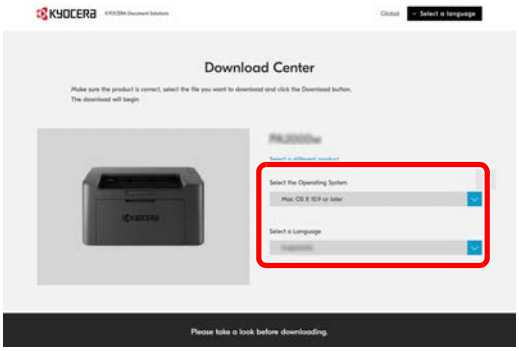

5 Driver tab > "Mac Printer Driver(x.x and later)"

An installer of the selected software will be downloaded.

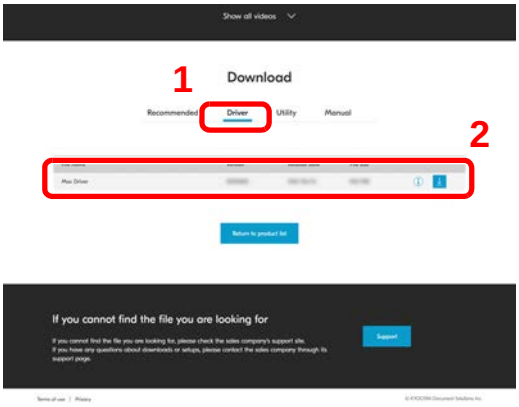

6 Install the Printer Driver.

Double click to launch the downloaded installer.

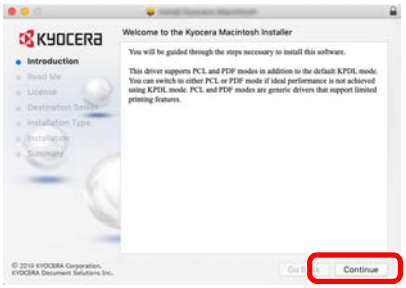

Install the printer driver as directed by the instructions in the installation software.

This completes the printer driver installation.

If a USB connection is used, the machine is automatically recognized and connected.

(PA2001w/PA2000w only)

If an IP connection is used, the settings below are required.

7 Open System Preferences and add the printer.

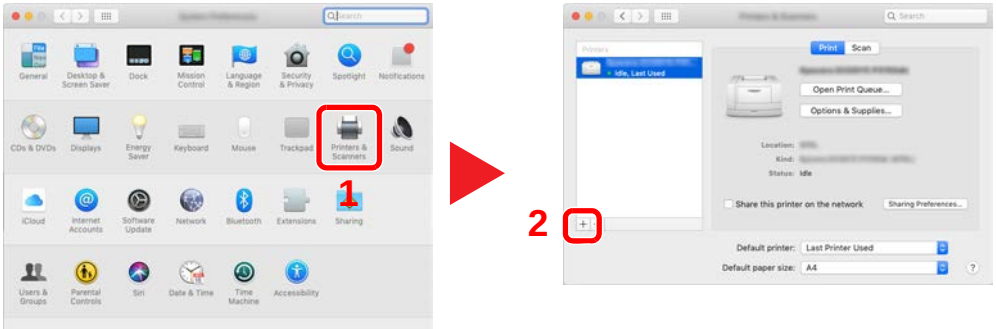

8 Select **Default** and click the item that appears in "Name" and then select the driver in "Use".

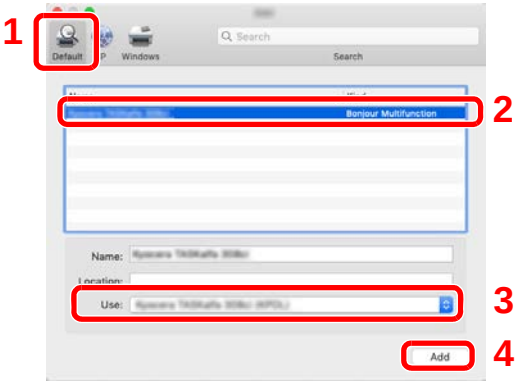

9 The selected machine is added.

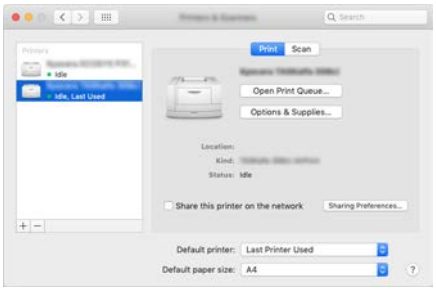

Note When using an IP connection, click the IP icon for an IP connection and then enter the host name or IP address. The number entered in "Address" will automatically appear in "Name". Change if needed.

Uninstalling Software

Perform the following procedure to delete the Software from your computer.

Note Uninstallation on Windows must be done by a user logged on with administrator privileges.

1 Display the screen.

Click Search box in taskbar, and enter "Uninstall Kyocera Product Library" in the search box. Select **Uninstall Kyocera Product Library** in the search list.

Note In Windows 8.1, click **Search** in charms, and enter "Uninstall Kyocera Product Library" in the search box. Select **Uninstall Kyocera Product Library** in the search list.

2 Uninstall the software.

Place a check in the check box of the software to be deleted.

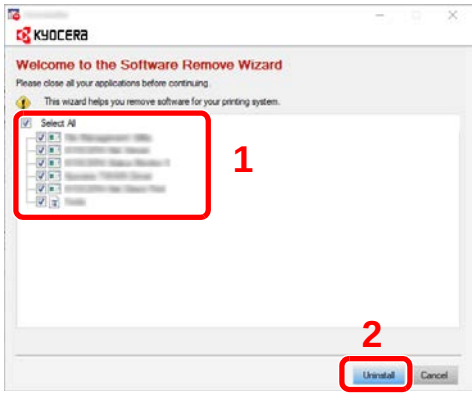

3 Finish uninstalling.

If a system restart message appears, restart the computer by following the screen prompts. This completes the software uninstallation procedure.

Note The software can also be uninstalled using Web Installer or Product Library. In the screen of Web Installer or Product Library, click Uninstall, and follow the on-screen instructions to uninstall the software.

Wireless Network Setup (PA2001w/PA2000w only)

When the wireless network connection settings are configured, it is possible to print or send in a wireless network (wireless LAN) environment.

Note Before configuring the wireless network settings, connect the computer to the access point of the network or wireless router.

Configuring the wireless network settings, follow the steps below:

1 Install the printer driver for USB connection on your computer.
Refer to *Installing Drivers and Utilities (For installation from the DVD (Product Library))* on page *3-12* or *Installing Drivers and Utilities (For installation from our website)* on page *3-20*.

2 Configure network connection. There are three ways to configure.
- Configuring Network Connection Using the Push Button (page *3-30*)
- Configuring Network Connection Using the Wireless Network Setup Tool (page *3-31*)
- Configuring Network Connection by Entering a PIN (page *3-33*)

3 Install the printer driver for wireless network connection on your computer.
Refer to *Installing Drivers and Utilities (For installation from the DVD (Product Library))* on page *3-12* or *Installing Drivers and Utilities (For installation from our website)* on page *3-20*.

Install the printer driver for USB connection on your computer

1 Connect the machine with a computer via USB cable when the machine is powered on.

2 Turn on the computer.

3 Install the printer driver for USB connection on your computer.

Refer to *Installing Drivers and Utilities (For installation from the DVD (Product Library))* on page *3-12* or *Installing Drivers and Utilities (For installation from our website)* on page *3-20*.

Configuring Network Connection Using the Push Button

If your router supports WPS, you can configure network connection using the push button.

1 Turn on the computer.

2 Press [**Wireless Network**] ( ) on the operation panel of the machine.

The wireless network indicator flashes.

3 Press the push button on the router.

The network between this machine and the router is configured. If the network connection between this machine and the router is complete, Wireless Network Indicators will light up.

4 Install the printer driver for wireless network connection on your computer.

Refer to *Installing Drivers and Utilities (For installation from the DVD (Product Library))* on page *3-12* or *Installing Drivers and Utilities (For installation from our website)* on page *3-20*.

Configuring Network Connection Using the Wireless Network Setup Tool

To send the wireless network settings configured using the Wireless Network Setup Tool to the machine, connect the computer with the machine locally. The connection method is wired connection via USB cable.

1 Connect the machine with a computer via USB cable when the machine is powered on.

2 Turn on the computer.

3 Open the KYOCERA Client Tool.

Click Start button on the Windows > **Kyocera** > **KYOCERA Client Tool**.

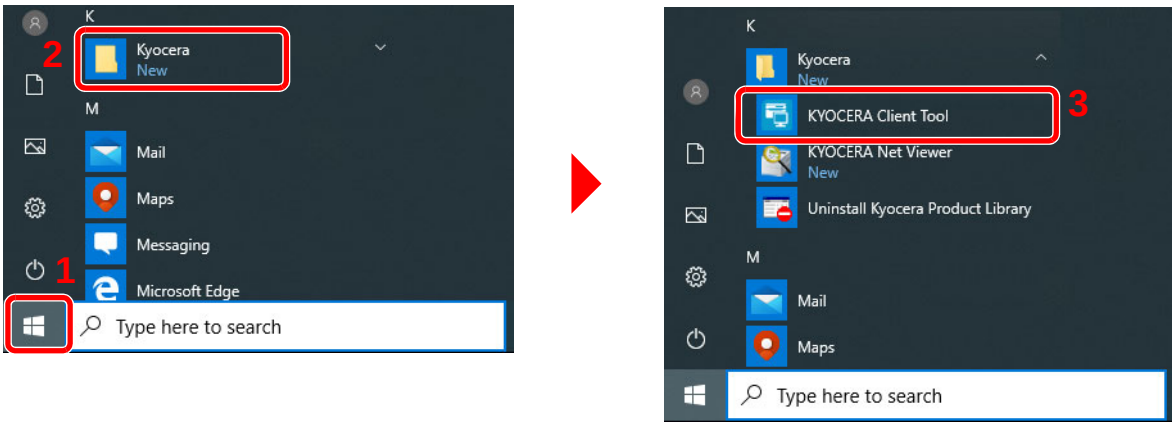

4 Click the **Wireless Network settings** tab > **Wireless Network Setup Tool**.

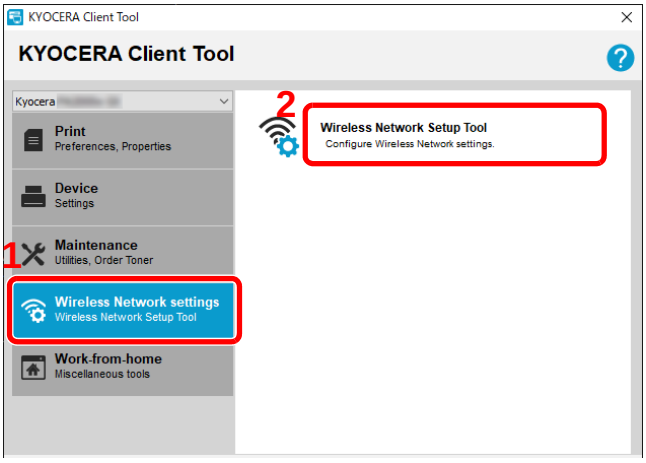

5 Click **Do not use WPS.** > **Next >**.

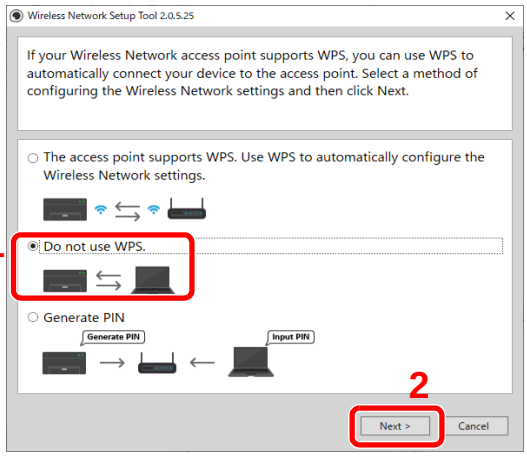

6 Click **Next >**.

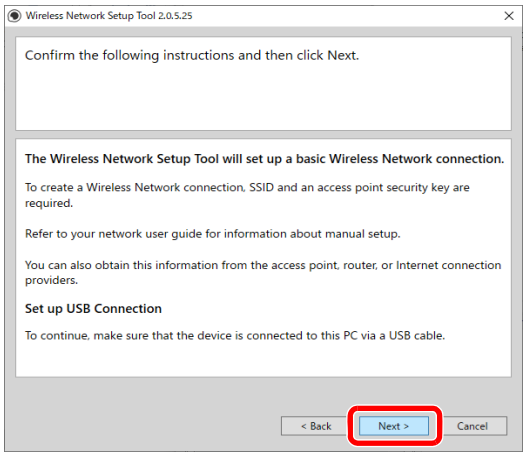

7 Select an access point you want to connect the device, and then click **Next >**.

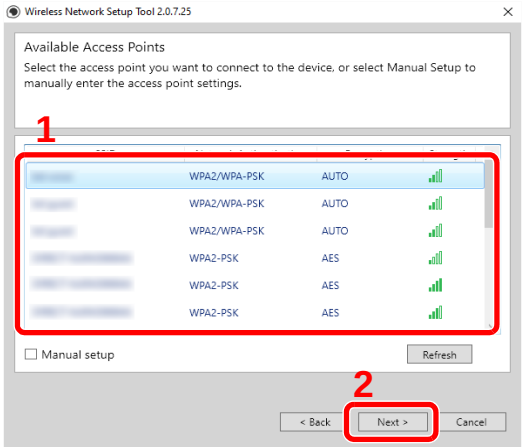

Note To manually enter the access point settings, select **Manual Setup**.

8 Enter the pre-shared key, and then click **Next >**.

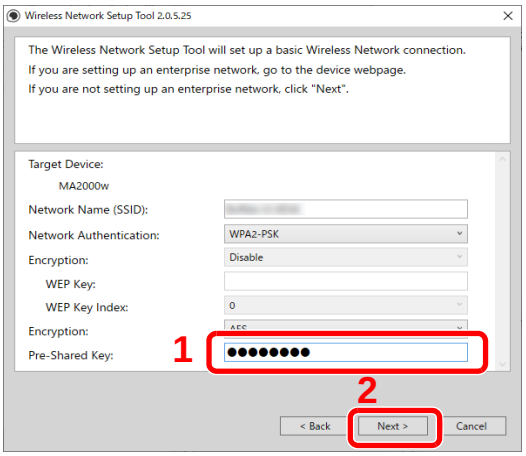

9 Select the check boxes of functions you want to use with Wireless Network connection, and click **Finish**.
The network between this machine and the computer is configured.

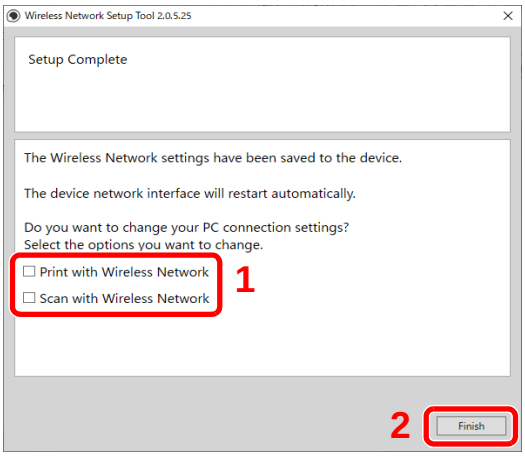

Note Even if show “Setup Complete”, if you have the problems communicating with the access point, please check that access point information you set is correct. To reconfigure the settings, uninstall the drivers and utilities, and reinstall them again.

Configuring Network Connection by Entering a PIN

You can configure the network by entering a PIN generated by this machine into the router page.

1 Connect the machine with a computer via USB cable when the machine is powered on.

2 Turn on the computer.

3 Open the KYOCERA Client Tool.

Click Start button on the Windows > **Kyocera** > **KYOCERA Client Tool**.

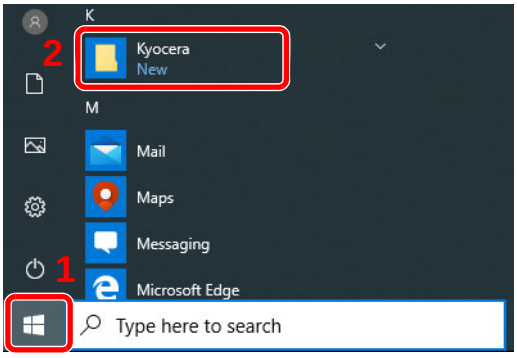

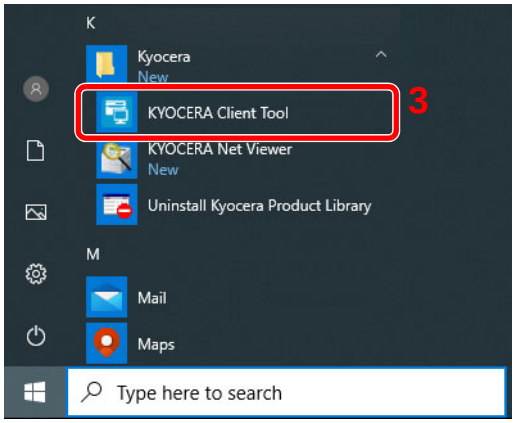

4 Click the **Wireless Network settings** tab > **Wireless Network Setup Tool**.

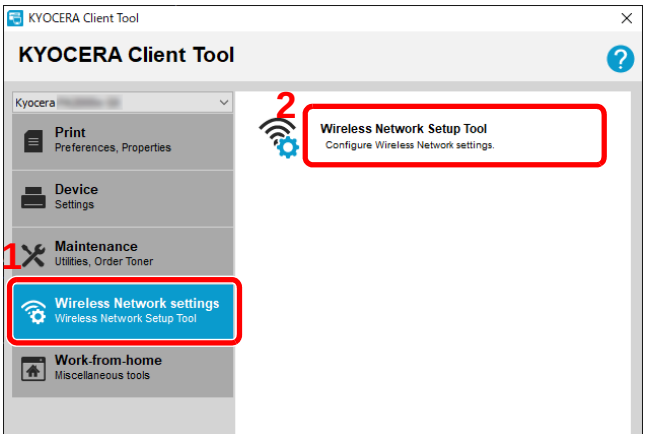

5 Click **Generate PIN** > **Next >**.

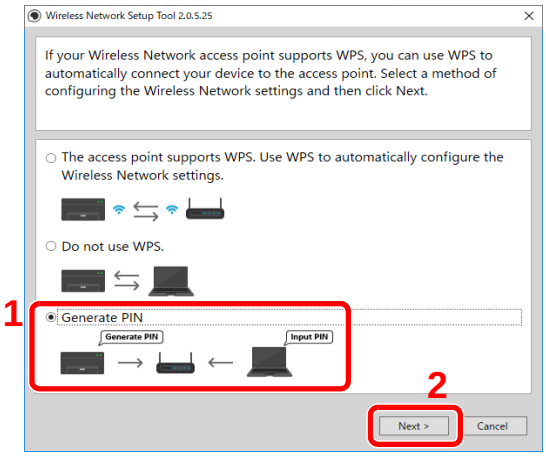

6 Check the PIN, and then click **Next >**.

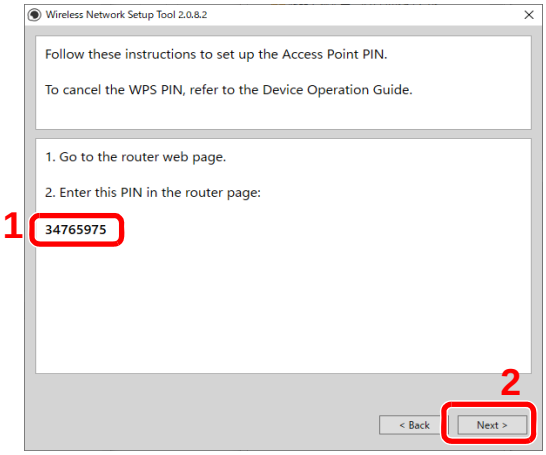

7 Enter the PIN checked in step 6 into the access point.

The network between this machine and the computer is configured.

For entering the PIN, refer to the Device Operation Guide.

8 Select the check boxes of functions you want to use with Wireless Network connection, and click **Finish**.

The network between this machine and the computer is configured.

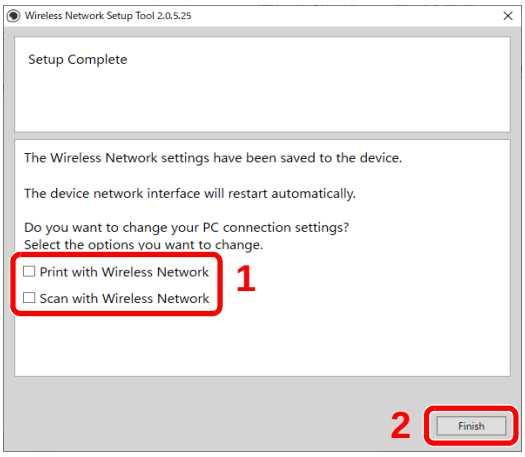

Note Even if show “Setup Complete”, if you have the problems communicating with the access point, please check that access point information you set is correct. To reconfigure the settings, uninstall the drivers and utilities, and reinstall them again.

Machine Settings

Various machine settings can be configured from a computer using KYOCERA Client Tool. Install KYOCERA Client Tool from the provided *Product Library* disc.

Note For the detailed functions of KYOCERA Client Tool, refer to *KYOCERA Client Tool User Guide*.

Accessing KYOCERA Client Tool

To open the KYOCERA Client Tool, click **Start** button on the Windows > **Kyocera** > **KYOCERA Client Tool**.

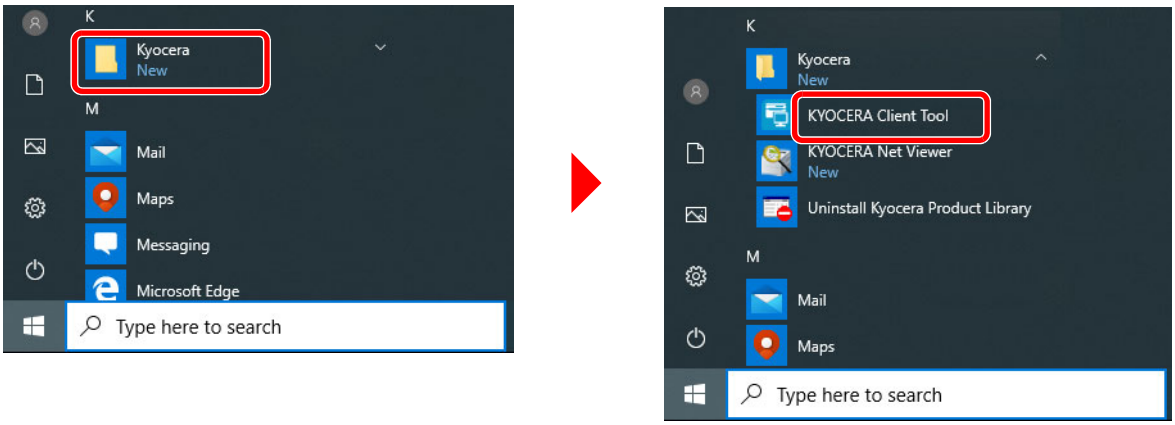

Note KYOCERA Client Tool can also be opened by clicking KYOCERA Client Tool icon on the desktop.

KYOCERA Client Tool Functions

The functions of KYOCERA Client Tool are described below.

Function	Description	Reference Page
KYOCERA Client Tool	KYOCERA Client Tool gives you quick access to common machine features and settings, plus the current status of all supported machines. You can also use KYOCERA Client Tool to order toner, download printer drivers, access KYOCERA Net Viewer, open the company website and view machine documentation.	3-36
KYOCERA Client Tool > Status Monitor	Lets you view the status of the machine on your desktop.	3-39
KYOCERA Client Tool > Configuration	Allows user to configure machine settings, including energy saving and paper settings. Messages shown in the Status Monitor are also configured here.	3-42
KYOCERA Client Tool > Maintenance Menu	For machine maintenance. Use when print quality deteriorates or to adjust the print position. You can also check corrective actions in case of troubles.	6-14 7-5
KYOCERA Client Tool > Work-from-home	Lets you use the tools useful for work-from-home.	3-39

KYOCERA Client Tool Settings

General

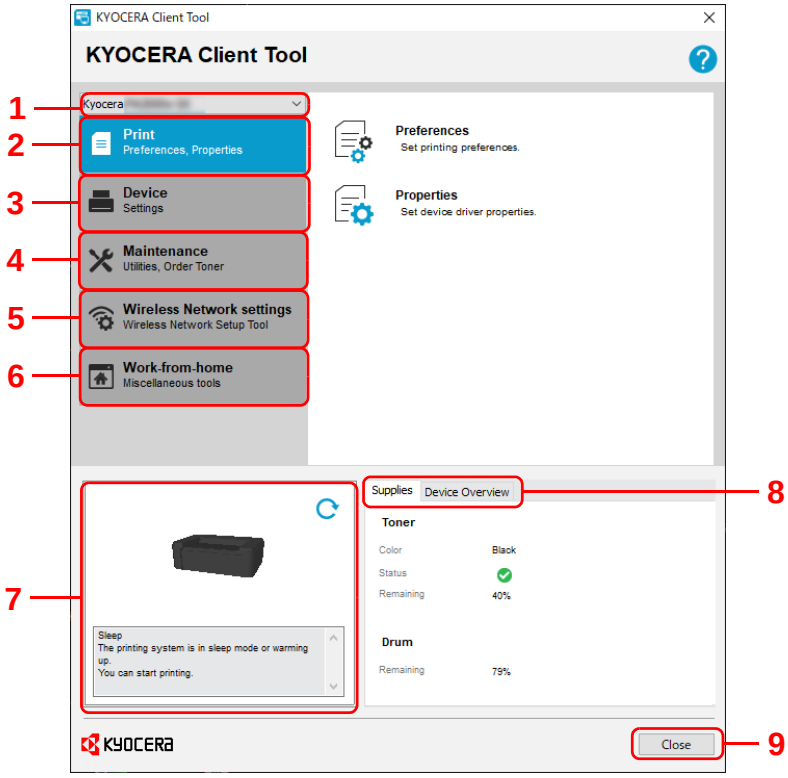

No.	Item	Description	Reference Page
1	Machine list	The list at the top of KYOCERA Client Tool screen includes all of the supported machines installed on your computer. You can select a machine from this list to view its properties and select available options, such as configuration, maintenance, and driver download.	—
2	**Print**	The **Print** tab gives you access to printing preferences and machine driver properties. Click **Preferences** or **Properties** to open the settings.	3-37
3	**Device**	The **Device** tab lets you configure a machine, view documentation, restart a machine and restore factory default settings. Click **Configuration** to display the Configuration screen. This lets you configure various machine settings. Refer to *Configuration* on page *3-42*.	3-38
4	**Maintenance**	The **Maintenance** tab lets you open KYOCERA Net Viewer*, order replacement toner, view our web site, check corrective actions in case of errors, and download software. Click **Maintenance Menu** to display the Maintenance Menu screen. This lets you perform machine maintenance. Refer to *Maintenance Menu* on page *6-14*.	3-38
5	**Wireless Network Settings (PA2000w/PA2001w only)**	The **Wireless Network Settings** tab lets you configure the Wireless Network settings. Click **Wireless Network Setup Tool** to start the Wireless Network Setup Tool. This tab will not be displayed once the Wireless Network connection settings are complete.	3-39
6	**Work-from-home**	The Work-from-home tab lets you use the tools useful for work-from-home. Counter, Remote FAX, Data Masking and Log Settings functions are available.	3-39

No.	Item	Description	Reference Page
7	Machine status	This shows a 3D image of the selected machine and its current status. Click (**Refresh**) to refresh the machine status. You can also click on the 3D image when you are experiencing the following error to open the troubleshooting page on our website. • Paper jam • Replace toner • Replace drum	—
8	**Supplies**	The **Supplies** tab shows the toner status.	—
	Device Overview	The **Device Overview** tab shows the machine settings.	—
9	**Close**	Clicking **Close** exits KYOCERA Client Tool.	—

* To display KYOCERA Net Viewer, KYOCERA Net Viewer must be installed.

Print Tab

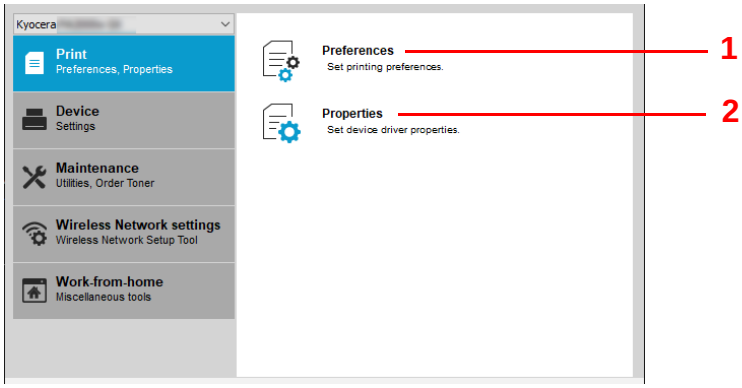

No.	Item	Description
1	**Preferences**	Opens the **Printing Preferences** screen for the selected machine.
2	**Properties**	Opens the **Properties** screen for the selected machine.

Device Tab

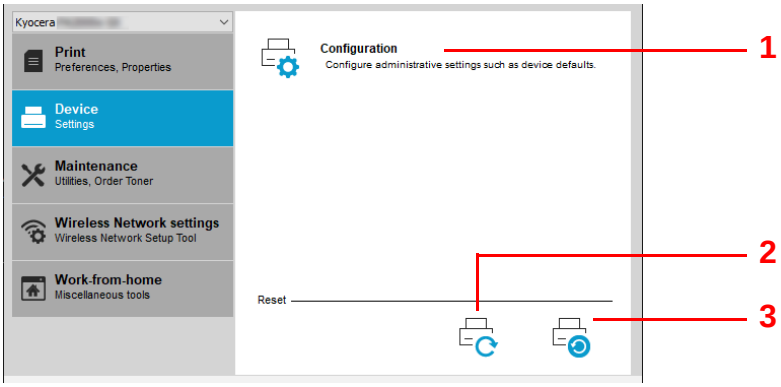

No.	Item	Description	Reference Page
1	**Configuration**	Opens the **Configuration** screen for the selected machine.	3-42
2	**Device restart**	Click the **Device restart** icon to restart the machine. Click **Yes** to confirm. You must be logged in with administrator privileges on your PC.	—
3	**Factory default**	Click the **Factory default** icon to return all of the machine properties of the selected model to its default settings. Click **OK** to confirm. You must be logged in with administrator privileges on your PC.	—

Maintenance Tab

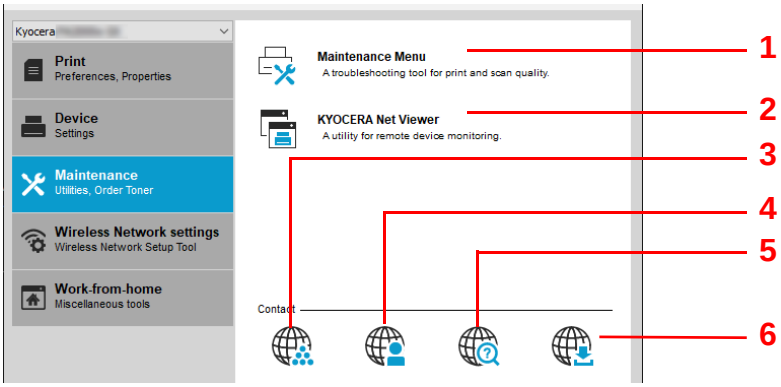

No.	Item	Description	Reference Page
1	**Maintenance Menu**	Opens **Maintenance Menu** screen.	6-14
2	**KYOCERA Net Viewer**	Opens KYOCERA Net Viewer.*	*KYOCERA Net Viewer User Guide*
3	**Order Toner**	You can order replacement toner by e-mail or on the web. Click the **Order Toner** icon for these options: • Send e-mail Use the default e-mail address or type another e-mail address and then click **OK** to open your default e-mail program. • Open Web page Use the default web address or type another web address and then click **OK** to open the web page in your default web browser.	—
4	**Kyocera Online**	Opens our website.	—
5	**Troubleshooting**	Opens the troubleshooting on our website.	7-5
6	**Driver Download**	Click to open the download page of our website. You can download software and find an authorized dealer.	—

* To display **KYOCERA Net Viewer**, KYOCERA Net Viewer must be installed.

Wireless Network Tab (PA2001w/PA2000w only)

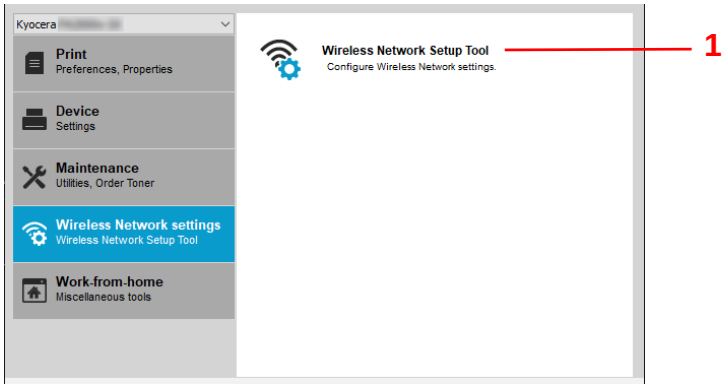

No.	Item	Description	Reference Page
1	**Wireless Network Setup Tool**	Run the **Wireless Network Setup Tool**.	3-30

Work-from-home Tab

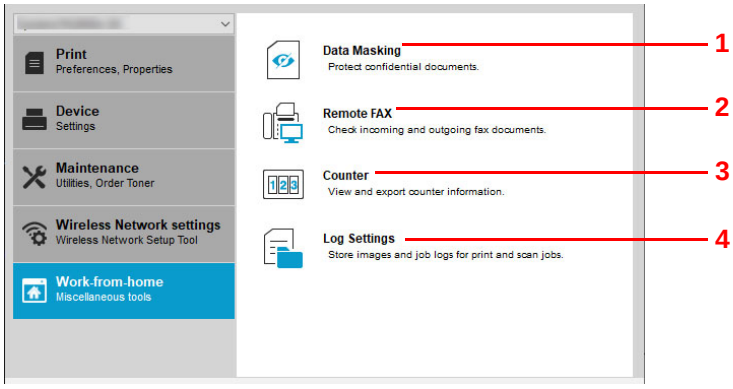

No.	Item	Description	Reference Page
1	**Data Masking**	Prints a specific pattern of image on a classified document to be discarded so that its contents cannot be read.	5-1
2	**Remote FAX**	You can check fax received by your company, and send fax to your company.	5-2
3	**Counter**	You can check the print count. In addition, you can output them as data.	5-14
4	**Log Settings**	Store images and job logs for print jobs. Stored logs are used for tracking printed documents.	5-15

Status Monitor Icon

When KYOCERA Client Tool is installed, you can check the machine status in the Status Monitor icon.

The Status Monitor icon displays machine status messages in the lower right corner of the screen.

Screen Overview

The screen overview of the Status Monitor icon is as follows.

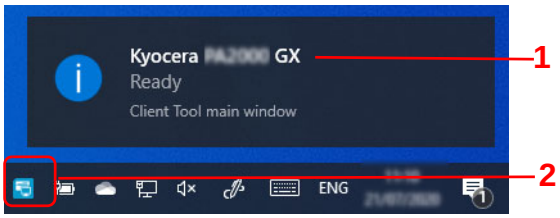

No.	Item	Description
1	Pop-up window	If an information notification event occurs, a pop-up window appears. Information notification events can be set in the Configuration. Refer to *Configuration* on page *3-42*.
2	Status Monitor icon	The Status Monitor icon is displayed in the taskbar notification area when the Status Monitor is running.

When the Status Monitor icon is active, you can select KYOCERA Client Tool options by right-clicking the icon in the system tray.

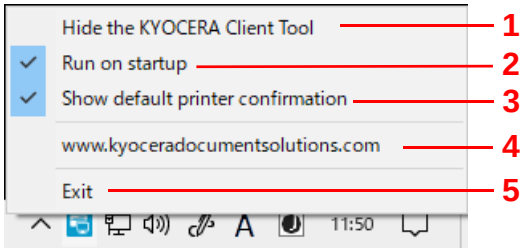

No.	Item	Description
1	**Show/Hide the KYOCERA Client Tool**	Switches between hiding and showing KYOCERA Client Tool screen.
2	**Run on startup**	If you select this option, the Client Tool will start automatically.

No.	Item	Description
3	**Show default printer confirmation**	If you select this option, when KYOCERA Client Tool is started, a confirmation screen for the default device will be displayed. 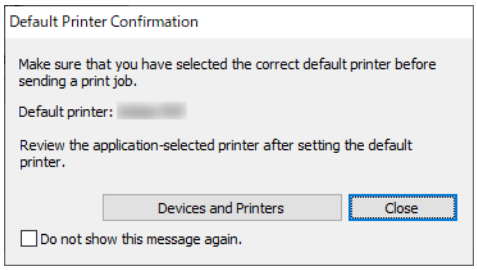 **Devices and Printers:** Opens Devices and Printers of Windows. **Close:** Closes the pop-up screen. **Do not show this message again. :** If you select this option, this pop-up screen will not appear from the next time.
4	(URL)	Opens our website.
5	**Exit**	Closes KYOCERA Client Tool and removes the Status Monitor icon from the system tray.

Configuration

The Configuration is a function of KYOCERA Client Tool. The default settings of the machine can be changed and the messages that appear in the Status Monitor can be set.

Note For the detailed functions of the Configuration, refer to *KYOCERA Client Tool User Guide*.

Accessing the Configuration

Follow these steps to display the Configuration on the desktop.

1. Start the KYOCERA Client Tool as explained in *Accessing KYOCERA Client Tool* on page *3-35*.
2. Click **Configuration** on the **Device** tab. The Configuration opens.

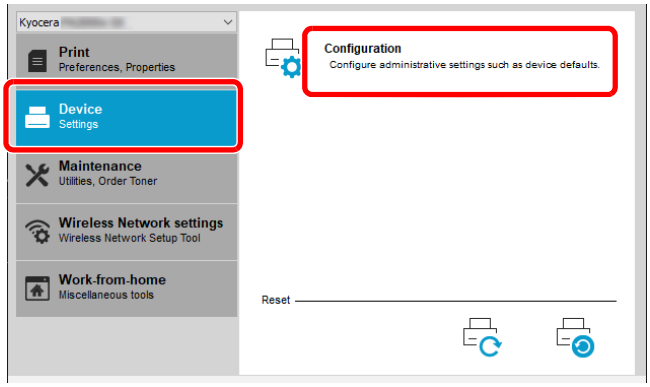

Configuration Screen

General

PA2001w
PA2000w

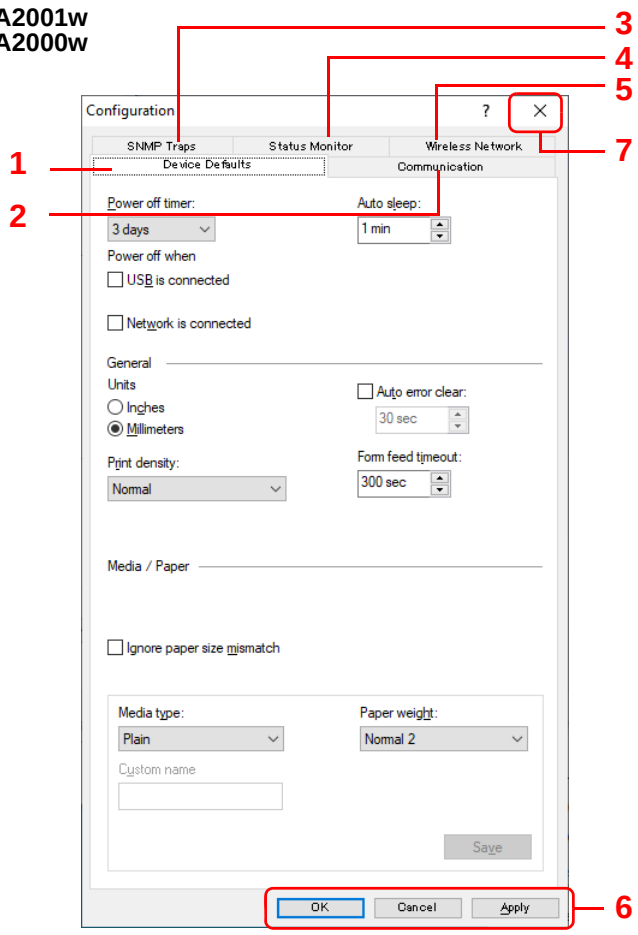

PA2001
PA2000

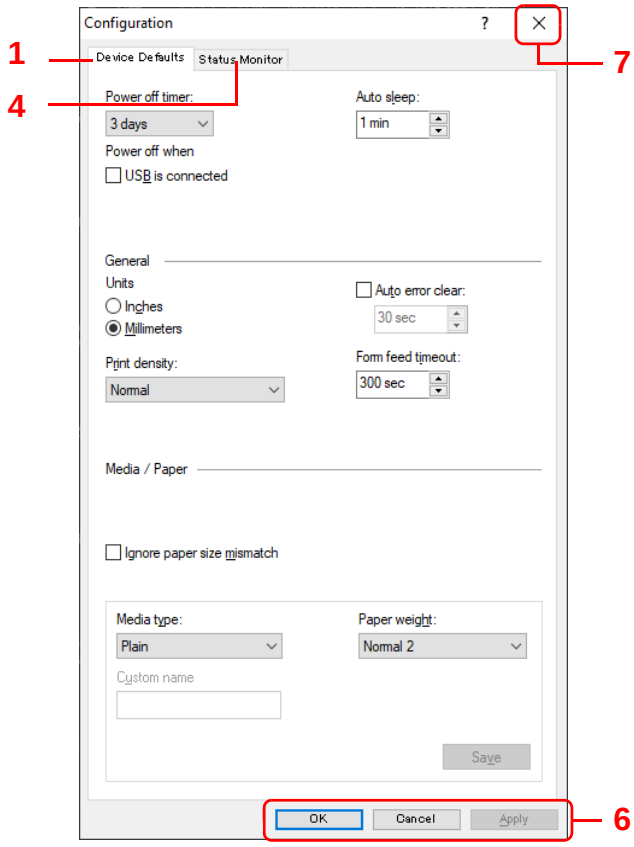

No.	Item	Description	Reference Page
1	**Device Defaults**	Configure overall machine operation.	3-44
2	**Communication**	Configure settings for Communication.	3-46
3	**SNMP Traps**	Configure settings for SNMP Traps.	3-47
4	**Status Monitor**	Configure settings for the Status Monitor.	3-48
5	**Wireless Network**	Configure settings for the Wireless Network.	3-49
6	**OK/Cancel/Apply**	Clicking **OK** exits the Configuration after applying the modified machine settings. Clicking **Cancel** exits the Configuration without applying the modified machine settings. Clicking **Apply** applies the modified machine settings without exiting the Configuration.	—
7	—	Close the Configuration.	—

Device Defaults Tab

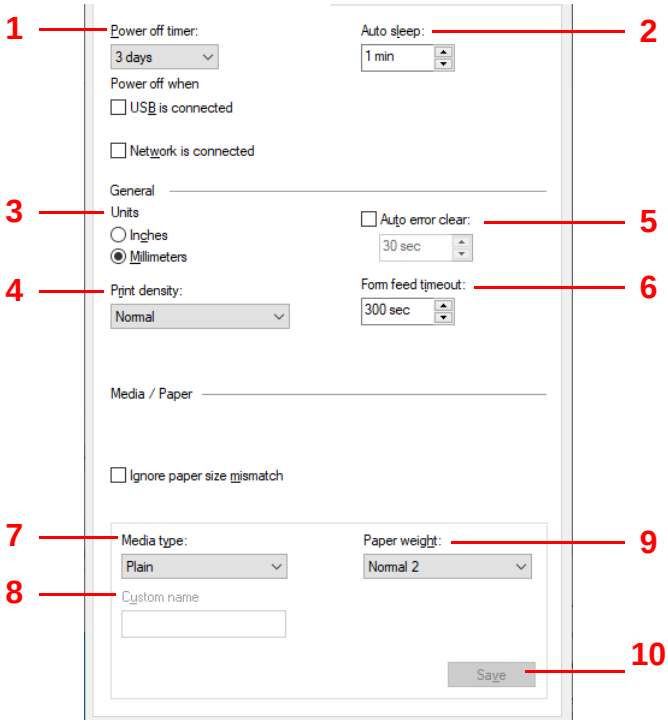

No.	Item	Description
1	**Power off timer**	Select the length of time before the machine shuts off automatically when not in use. The default preset time is **3 days**. Value: **1** to **6 hours**, **9 hour**, **12hour**,**1 day** to **1 week** • **USB is connected**: Selects whether or not to turn the power off automatically when a USB is connected. • **Network is connected**: Selects whether or not to turn the power off automatically when a Network is connected.
2	**Auto sleep**	Set the sleep timer for the machine to go into sleep mode when not in use. The default preset time is 1 minute. Value: **1** to **60** minutes (1 minute increments)
3	**Units**	Select **Inches** or **Millimeters** for the unit for paper dimensions.
4	**Print density**	Adjust density using 5 levels. Value: **Light**, **Medium light**, **Normal**, **Medium dark**, **Dark**
5	**Auto error clear**	Enable auto error clear. If an error occurs during processing, processing stops to wait for the next step to be taken by the user. In the auto error clear mode, automatically clear the error after a set amount of time elapses. If you select On for auto error clear, set the amount of time to wait before automatically clearing errors. Value: **5** to **495** seconds (every 5 seconds)
6	**Form feed timeout**	When receiving print data from the computer, the machine may sometimes wait if there is no information signaling that the last page does not have any more data to be printed. When the preset timeout passes, the machine automatically prints the documents. The options are between 5 and 495 seconds. Value: **5** to **495** seconds (every 5 seconds)
7	**Media type**	Set the default media type to load in cassette. Value: **Plain**, **Preprinted**, **Bond**, **Recycled**, **Rough**, **Letterhead**, **Color**, **Prepunched**, **High quality**, **Custom 1-8 (65 to105 g/m^2)** When **Custom 1-8** is selected, the **Custom name** appears.

No.	Item	Description
8	**Custom name**	Change names for **Custom 1**-**8**. Selecting media type, the name after change will be displayed.
9	**Paper weight**	Select weight for each media type. For details, refer to *Paper Type* on page *3-8*. Value: **Normal 1**, **Normal 2**, **Normal 3**
10	**Save**	Save the **Paper weight** and **Custom name** settings that are set for **Custom 1**-**8**.

Communication Tab (PA2001w/PA2000w only)

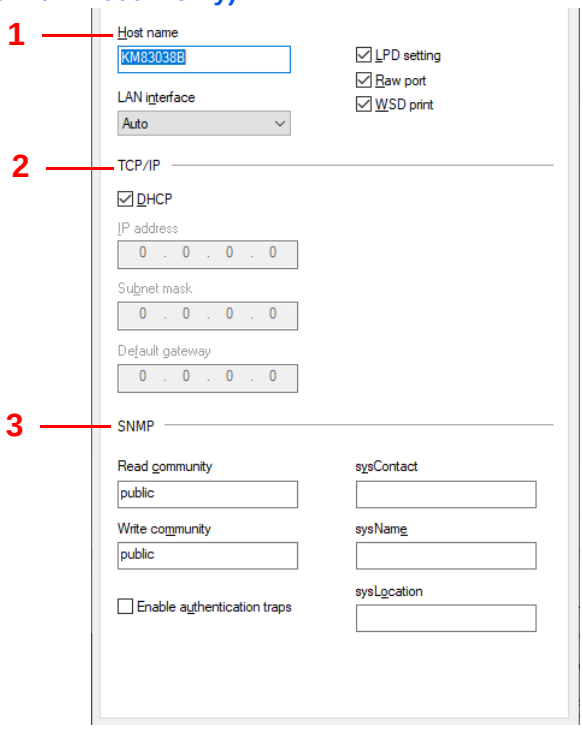

No.	Item	Description
1	**Host name**	Enter the host name of the machine. MAX characters: 16
2	**TCP/IP**	Select the check box to enable the DHCP protocol. Enter the **IP address**, **Subnet mask**, and **Default gateway** values.
3	**SNMP**	Select the check box to enable the SNMP protocol, and then select SNMP protocol options. The SNMP protocol is used for providing and transferring management information within the network environment. **Read community** and **Write community** can have up to 16 characters. The default community is public. Type **sysContact**, **sysName**, and **sysLocation** information up to 32 characters. Select **Enable authentication** to activate machine authentication.

SNMP Traps Tab (PA2001w/PA2000w only)

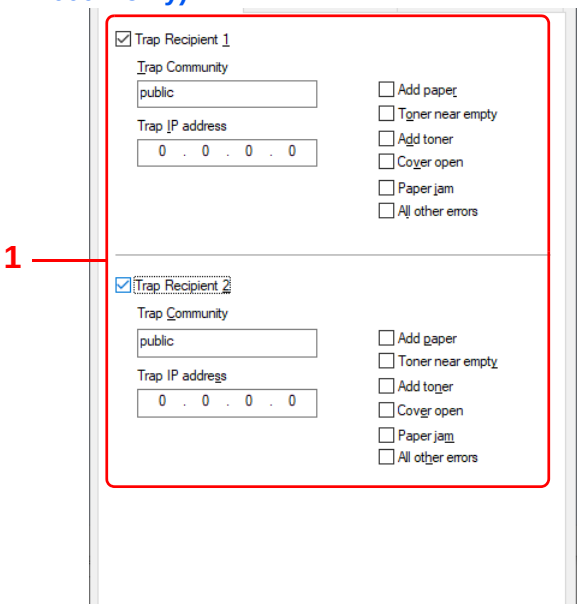

No.	Item	Description
1	**Trap Recipient**	You can select SNMP trap settings for 1 or 2 IP addresses. Should an error occur, such as **Add paper**, the machine automatically generates a trap. The trap sends an error message to one or two predetermined trap recipients. The trap server is the SNMP trap packet receiver which runs in the application. The default community is public. For each IP address, select the **Trap Recipient** check box, type the name of the trap community and IP address, and select from available events.

Status Monitor Tab

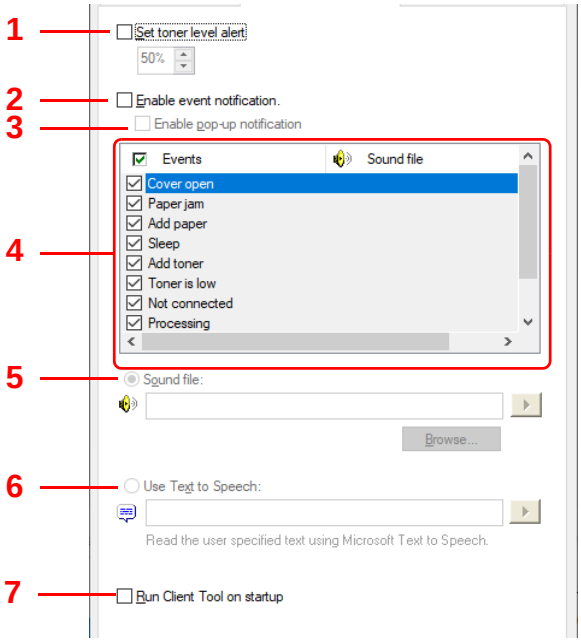

No.	Item	Description
1	**Set toner level alert**	Select to create an alert when the toner starts running low, and then select a percentage between 0 and 100. If the toner level goes below this percentage, an alert icon is displayed on the **Supplies** tab at the bottom of KYOCERA Client Tool screen.
2	**Enable event notification**	Select to activate the notification feature for selected machine events. When selected, notification options are available.
3	**Enable pop-up notification**	When selected, a pop-up message appears in the lower right corner of the screen for each selected event as it occurs.
4	Events list	Select one or more events for the notification. To select all events, select **Events**.
5	**Sound file**	With one or more events selected, select to enable sound notification. Type the location of a sound file (.WAV), or click **Browse** to find a sound file located on your computer. You can press the arrow button to hear the selected sound.
6	**Use Text to Speech**	With one or more events selected, select and type your preferred text. The Microsoft Text to Speech utility reads the text and plays it in a spoken voice. You can press the arrow button to hear the selected text.
7	**Run Client Tool on startup**	Enables run on startup for Client Tool. If this setting is enabled, Client Tool will be launched automatically when the PC boots.

Wireless Network Tab (PA2001w/PA2000w only)

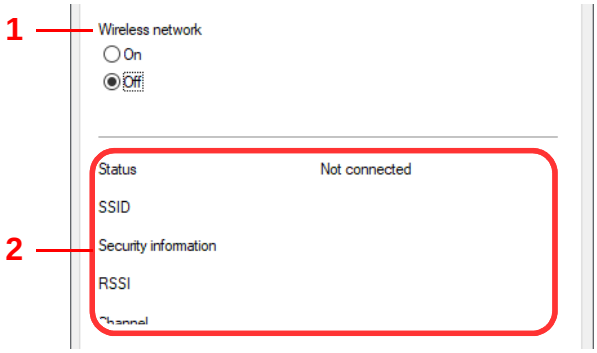

No.	Item	Description
1	**Wireless Network**	Enable Wireless Network.
2	-	Display the Wireless Network status.

Printing Reports

You can print reports to check the machine status, and event log.

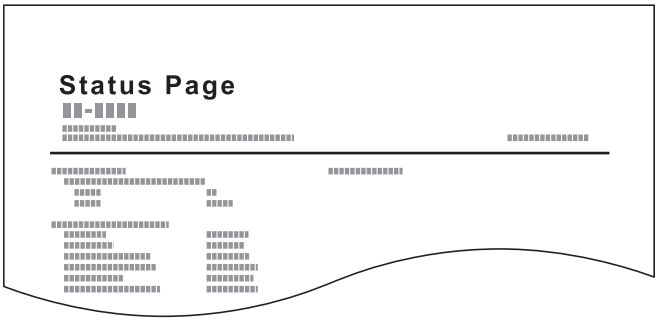

When [**Main Power**] ( ) is pressed, Attention Indicator and Main Power Indicator flash at the same time, and the machine switches to the Report Print Mode. A report can be printed by pressing and holding [**Main Power**] ( ) in this state.

A report to be printed can be selected with the pressing length.

Pressing for 5 seconds: Prints the status page.

Pressing for 10 seconds: Prints the network status page. (PA2001w/PA2000w only)

Pressing for 15 seconds: Prints the event log page.

Note while pressing [**Main Power**] ( ), Attention Indicator and Main Power Indicator blink twice alternately in 5-second intervals.

4 Printing

Printing from PC

Follow the steps below to print documents from applications.

In case of using the EcoPrint function, the product operating sound and the power consumption can be reduced. However, the printing speed will be slower and the image quality will be thinner.

Note To print the document from applications, install the printer driver on your computer. Refer to *Installing the Software in Windows* on page *3-13*.

In some environments, the current settings are displayed at the bottom of the printer driver.

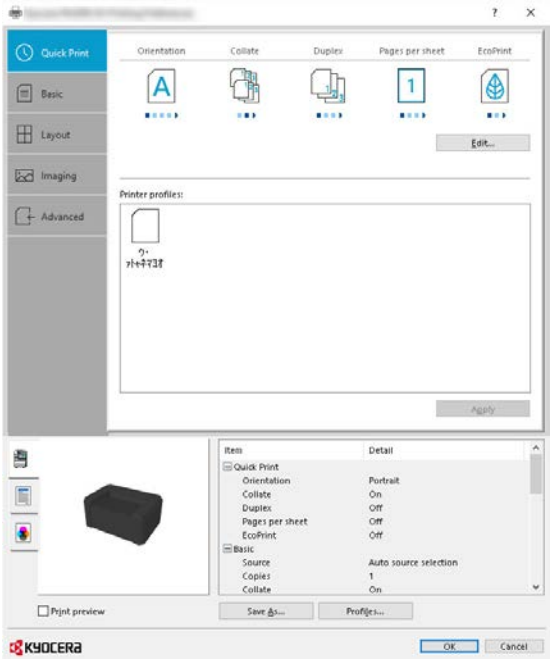

When printing the non-standard sized papers, load the non-standard sized papers in the cassette before performing the following procedure. Refer to *Loading Paper into Cassette* on page *3-9*.

1 Click **File** and select **Print** in the application.

2 Select the machine from the “Printer” menu and click the **Properties**.

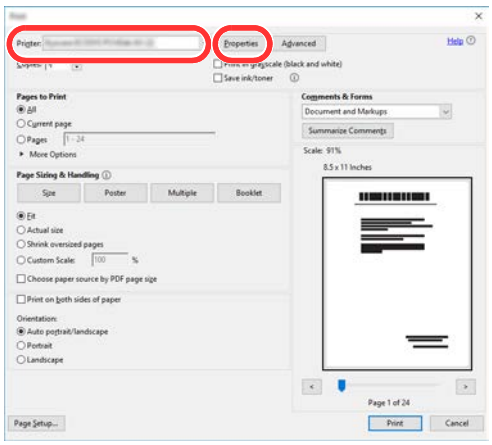

3 Select the **Basic** tab.

4 Click “Print size” menu and select the paper size to use for printing.

To load the paper of size that is not included in print sizes of the machine, the paper size needs to be registered. For details, refer to *Printing on Non-standard Sized Paper* on page *4-2*.

To print on the special paper such as Recycled, click “Media type” menu and select the media type.

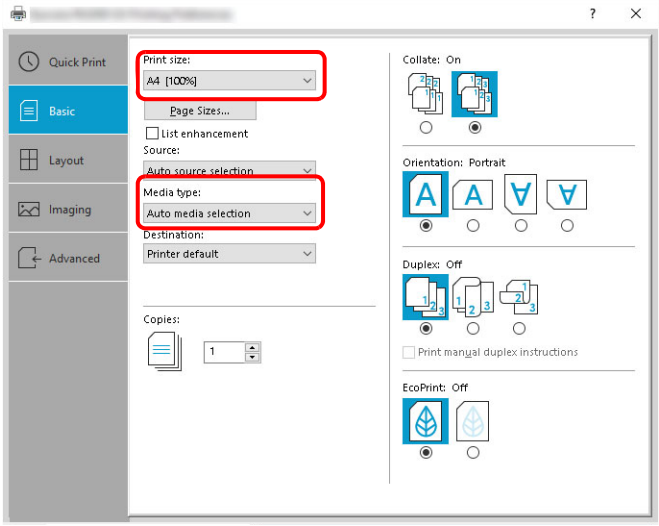

5 Click **OK** to return to the Print dialog box.

6 To start printing, click **OK**.

Printing on Non-standard Sized Paper

If you loaded a paper size that is not included in the print sizes of the machine, register the paper size in the **Basic** tab of the print settings screen of the printer driver.

The registered size can be selected from the “Print size” menu.

1 Display the print settings screen.

2 Click the **Basic** tab.

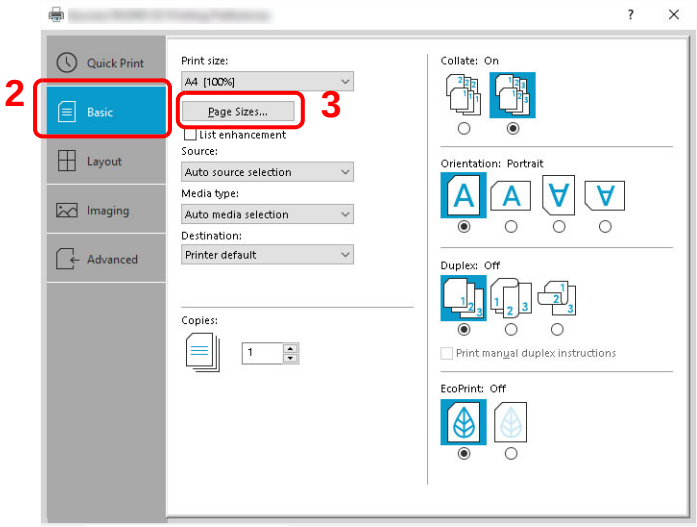

3 Click the **Page Sizes...**.

4 Click the **New**.

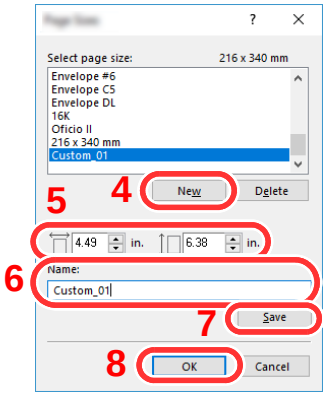

5 Enter the paper size.

6 Enter the name of the paper.

7 Click the **Save**.

8 Click the **OK**.

9 In the “Print size” menu, select the paper size (name) that you registered in steps 5 to 8.

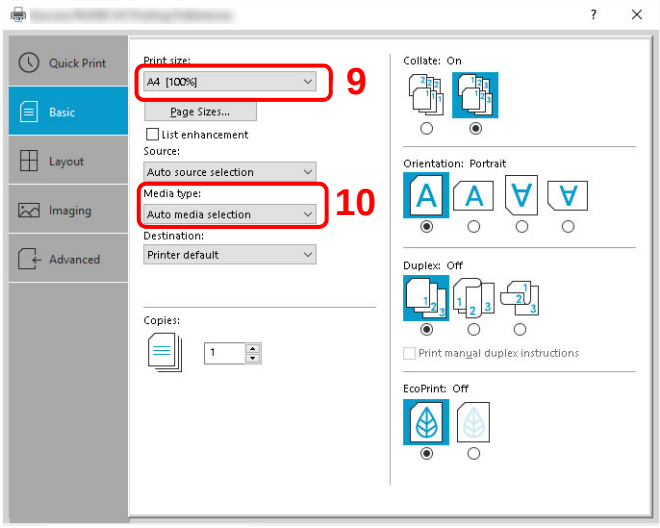

10 Select the type of paper in the “Media type” menu.

Manual Duplex

To print on both sides of the paper, use *Manual Duplex*. The even pages are printed first and then reloaded to print the odd pages. An instruction sheet is available to assist with loading the sheets in the correct orientation and order.

Note Ensure **Print manual duplex instructions** is selected to receive the instruction sheet. Continue to use the sheet until you are familiar with this feature.

1 Display the print settings screen.

2 Click the **Basic** tab.

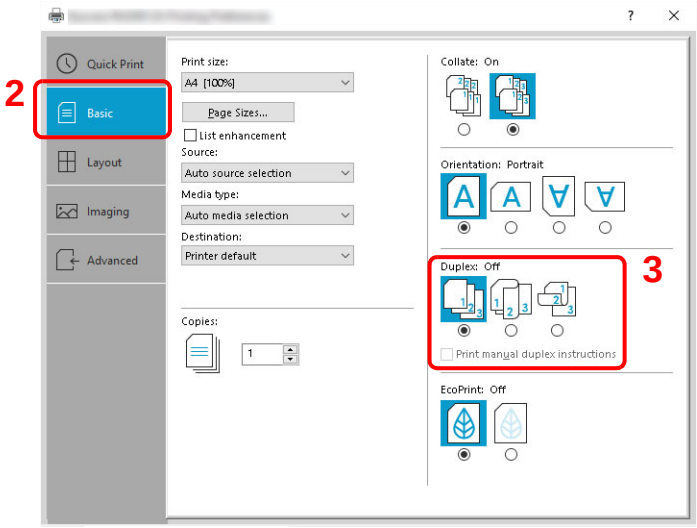

3 Set Duplex settings.

Select **Flip on long edge** if the binding will be on the long edge or **Flip on short edge** if the binding will be on the short edge. Select **Print manual duplex instructions** to receive the instruction sheet.

4 Click **OK** to return to the Print dialog box.

5 To start printing, click **OK**.

A **Manual Duplex Instruction** message box displays. The even pages are printed including the instruction sheet.

Note Instructions for manual duplex will be printed on the instruction sheet.

6 Remove all the even pages (including the instruction sheet) from the inner tray, fan through the sheets to separate them prior to loading.

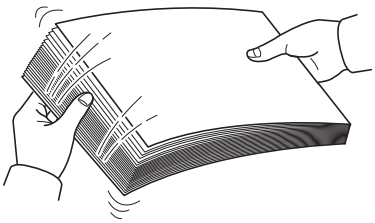

If the paper is curled at an edge, straighten it prior to reloading.

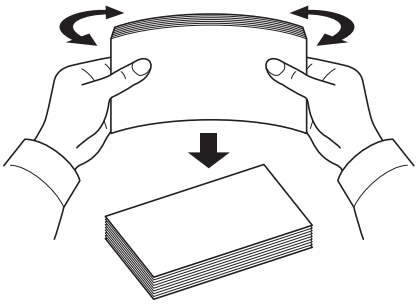

7 Load the even pages printed into the cassette with the instruction sheet facing down and the arrows pointing toward the machine.

Long Edge Binding **Short Edge Binding**

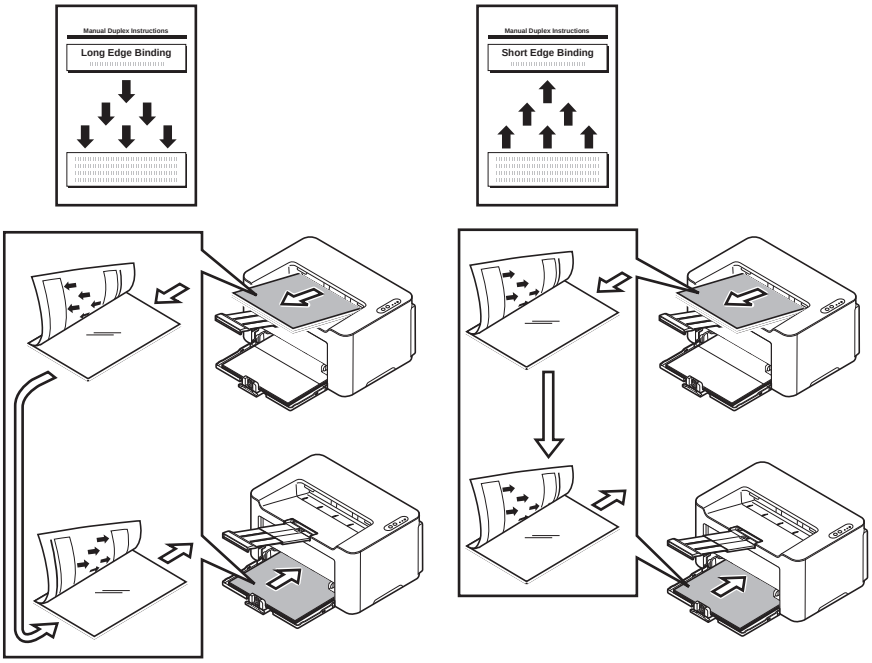

Note If the paper is considerably curled in one direction, roll the paper in the opposite direction to counteract the curl. If this will not cancel the curl satisfactorily, try to reduce the number of sheets loaded in the cassette to the maximum of 100.

8 Select **OK** in the **Manual Duplex Instruction** message box of the printer driver screen. All the odd pages will be printed.

Printer Driver Print Settings Screen

The printer driver print settings screen allows you to configure a variety of print-related settings. Refer to *Printer Driver User Guide*.

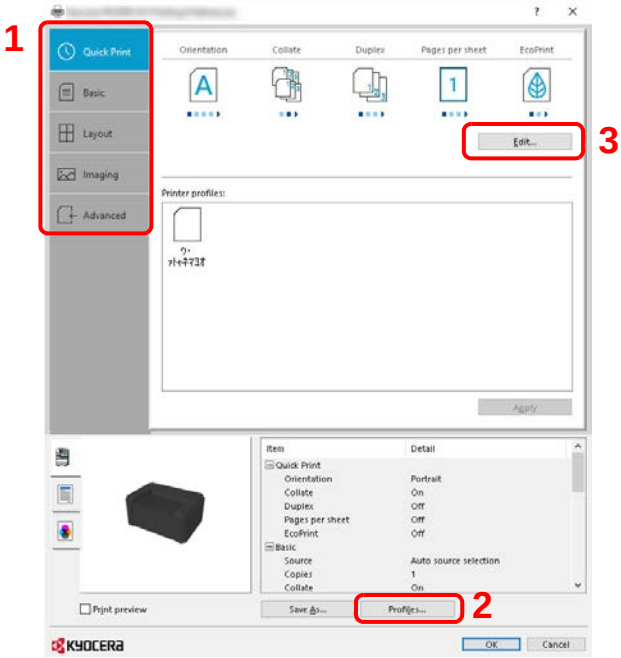

No.	Description
1	**Quick Print** tab Use this tab to define basic print options into group profiles that can be accessed quickly and easily. 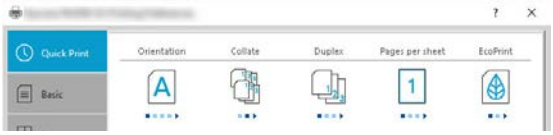 **Basic** tab Use this tab to select the page size and orientation. The paper source is also selected. **Layout** tab Use to create multiple pages on a single sheet of paper. Also contains the scaling option. **Imaging** tab Select this tab to change the print quality and graphic settings. **Advanced** tab Use to set up and add watermarks to your output.
2	**Profiles** Printer driver settings can be saved as a profile. Saved profiles can be recalled at any time, so it's a convenient practice to save frequently used settings.
3	**Edit** The assortment of icons at the top of the Quick Print tab can be customized to include features that you use most often.

Displaying the Printer Driver Help

The printer driver includes Help. To learn about print settings, open the printer driver print settings screen and display Help as explained below.

1 Click the **?** button in the upper right corner of the screen.

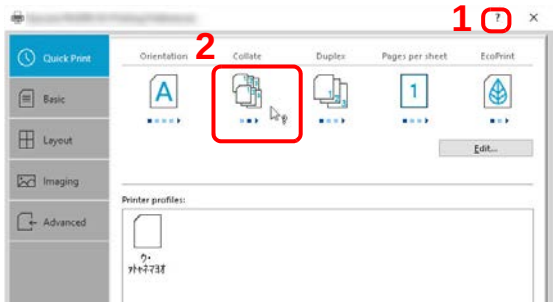

2 Click the item you want to know about.

Changing the Default Printer Driver Settings (Windows 10)

The default printer driver settings can be changed. By selecting frequently used settings, you can omit steps when printing.

The procedure is as follows. For details, refer to *Printer Driver User Guide*.

1 Click **Start** button on the Windows and then select **Windows System**, **Control Panel**, and **Devices and Printers**.

2 Right-click the printer driver icon of the machine, and click the **Printer properties** menu of the printer driver.

3 Click the **Basic** button on the **General** tab.

4 Select the default settings and click the **OK** button.

Canceling Printing from a Computer

To cancel a print job executed using the printer driver before the printer begins printing, do the following:

Note When canceling printing from this machine, press and hold [**Main Power**] (⏻) on the Operation Panel for 2 second or longer.

1 Double-click the printer icon ( ) displayed on the taskbar at the bottom right of the Windows desktop to display a dialog box for the printer.

2 Click the file for which you wish to cancel printing and select **Cancel** from the *Document* menu.

5 Useful Functions

Performing Data Masking

Prints a specific pattern of image on a classified document to be discarded so that its contents cannot be read. Documents can be safely discarded even without using a shredder.

Note To use this function, Microsoft .NET Framework 4.6.1 or later is required to be installed.

When this function is used, number of printable pages with the installed toner cartridge decreases.

This function is to make the original image less distinguishable, and it does not guarantee to make the image fully indistinguishable.

1 Start KYOCERA Client Tool according to the description in *Accessing KYOCERA Client Tool* on page *3-35*.

2 Click **Data Masking** in the **Work-from-home** tab. The Data Masking screen is displayed.

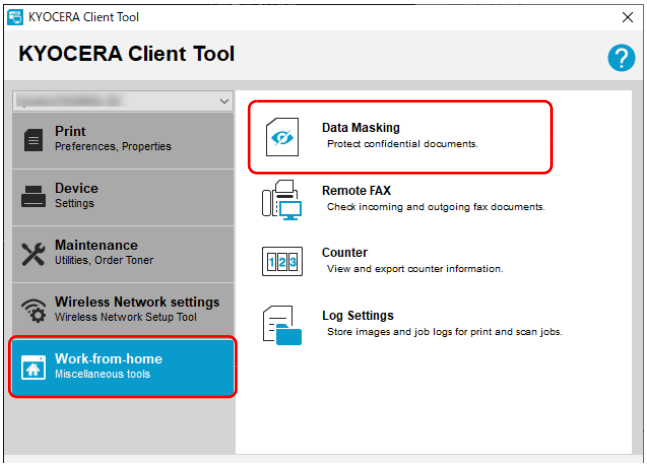

3 Configure the data masking setting.

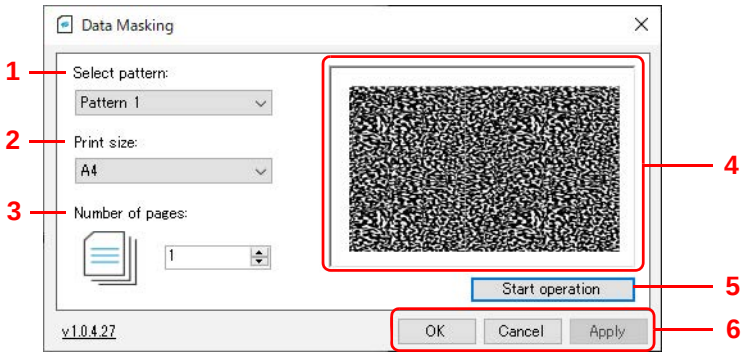

No.	Item	Description
1	**Select pattern**	Set a pattern of image to be printed. **Value: Pattern 1, Pattern 2**
2	**Print size**	Specify the print size. Value: **Letter**, **Legal**, **Executive**, **A4**, **A5**, **Folio**, **B5 (JIS)**, **B5 (ISO)**, **Envelope C5, Oficio II**, **216 × 340 mm**, **16K**, **A5-R (A5 (Landscape))**, **Custom size** When a **Custom size** is selected, the Custom print size screen appears. 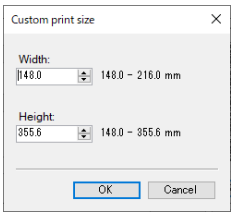 Type or select values for **Width** and **Length**. If the **Width** or **Length** value exceeds the allowable limit, it automatically adjusts to the limit after **OK** is clicked.

No.	Item	Description
3	**Number of pages**	Set the number of pages to be printed.
4	**-**	Sample of the selected print pattern is displayed.
5	**Start operation**	Starts data masking.
6	**OK/Cancel/Apply**	To apply changes to the settings and end the data masking, click **OK**. To end the data masking without applying changes to the settings, click **Cancel**. To apply changes to the settings without ending the data masking, click **Apply**.

4 Set documents to be discarded into the cassette according to the description in *Loading Paper* on page *3-3*.

Ensure the side to be printed is facing up and the paper is not folded, curled, or damaged.

5 Click **Start operation** to perform data masking.

Using Remote Fax

You can check fax received in your company from a computer at home, and forward and send documents scanned using this machine to a fax in your company.

Note To use this function, Microsoft .NET Framework 4.8 or later is required to be installed.

Starting Remote FAX

1 Start KYOCERA Client Tool according to the description in *Accessing KYOCERA Client Tool* on page *3-35*.

2 Click **Remote FAX** in the **Work-from-home** tab. The Remote FAX starts.

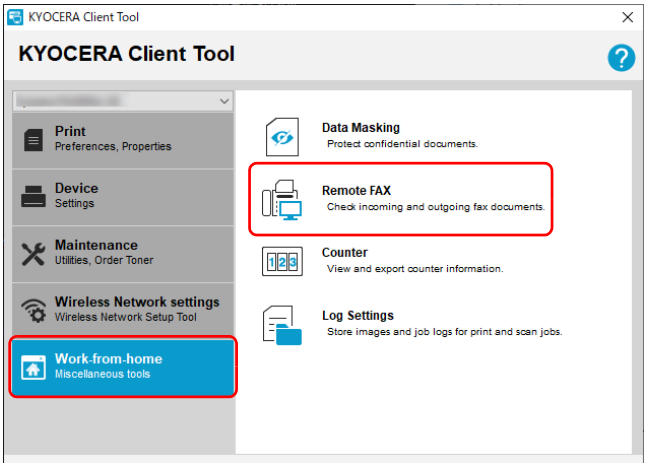

Note If the User Account Control screen is displayed, click Yes (allow).

Remote FAX Screen Overview

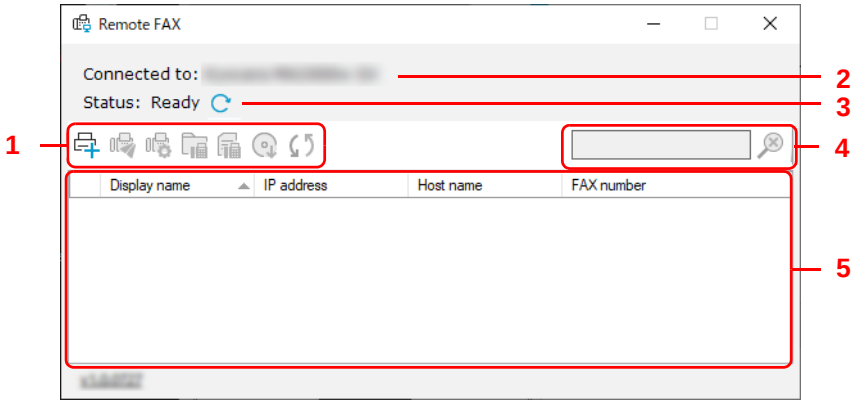

No.	Item	Description	Reference Page
1	**Add Device ( )**	Adds devices.	5-3
	Send FAX ( )	Sends a fax.	5-8
	FAX receive notification settings ( )	Configures the fax receive notification settings.	5-11
	Document Box ( )	Checks the received fax.	5-10
	FAX logs ( )	Checks the sent/received fax logs.	5-13
	Install driver ( )	Installs the fax driver.	5-5
	Refresh ( )	Refreshes status of the device selected in the device list.	-
2	**Connected to**	Displays the device selected in the KYOCERA Client Tool before starting the Remote FAX. Originals will be scanned with this device.	-
3	Status	Displays status of the device displayed in "Connected to". To refresh the status, click the **Refresh** ( ) icon.	-
4	Device search	Enter text to search from the device list. Click ( ) to delete text in the search box.	-
5	Device list	Displays the list of registered devices.	-

Registering device to Remote FAX

1 Click **Add Device** ( ).

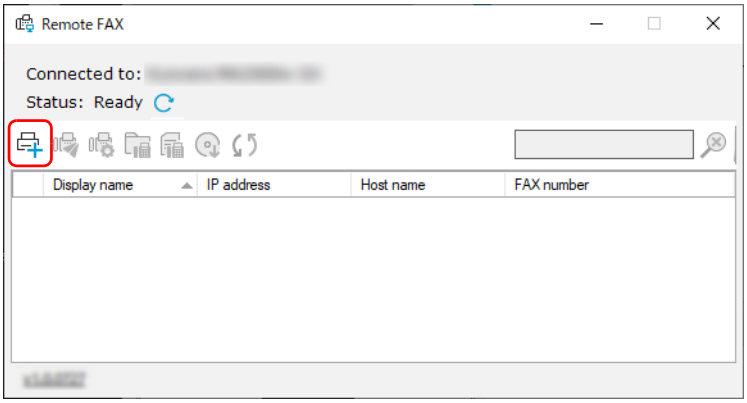

2 Enter an IP address or host name of the device to be added, and click **Add**.

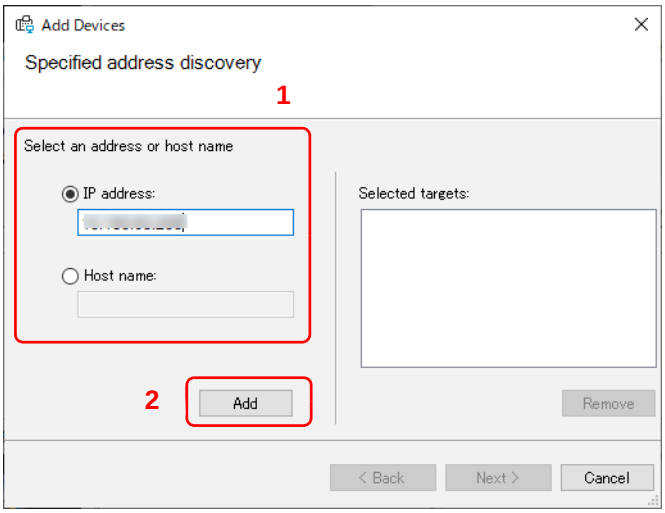

Note Up to 5 devices can be registered. To register more new devices, remove already registered devices first. To remove a device, select a device from the **Selected targets** list, and click **Remove**.

3 Click **Next >**.

4 Configure the connection setting according to the instruction on screen, and click **Next**.

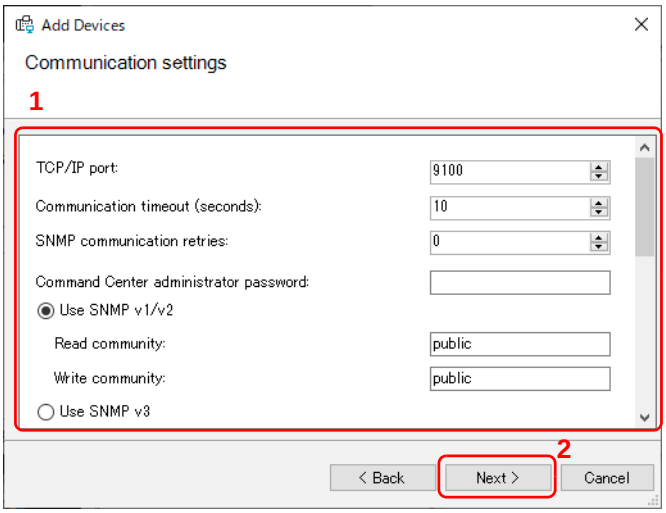

Note Configurable items are same as the setting in the KYOCERA Net Viewer. For details, refer to KYOCERA Client Tool User Guide.
For information required for the setting, contact the administrator of the connecting network.

5 Check the contents of the setting, and click **Finish**.

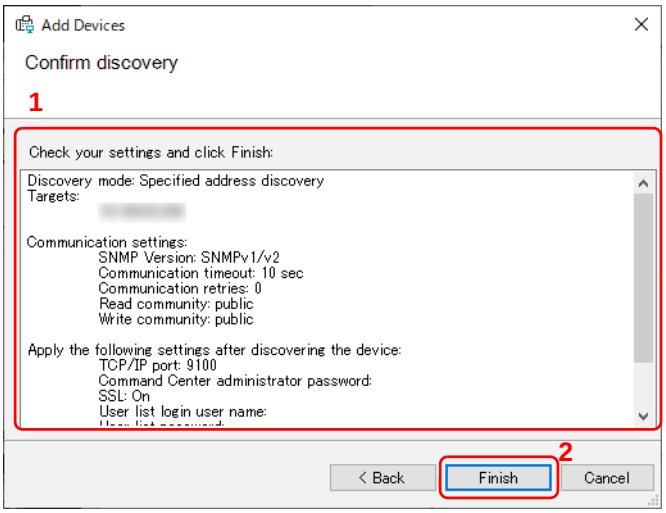

Note To remove a registered device, select a device to be removed, right-click it, and select **Delete device**.

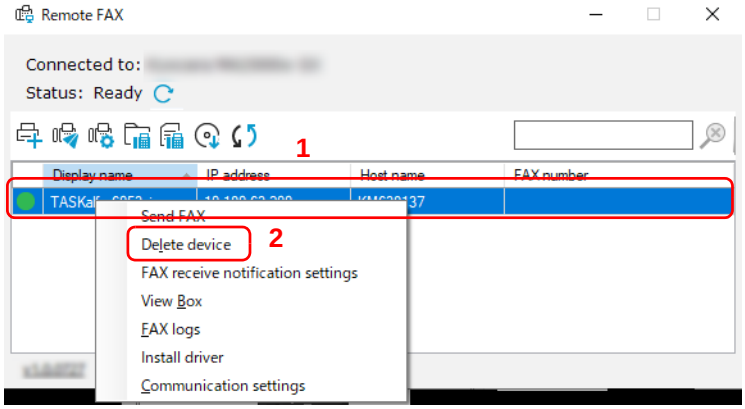

Installing Fax Driver

Install the fax driver to your computer.

1 Click **Install driver ( )**.

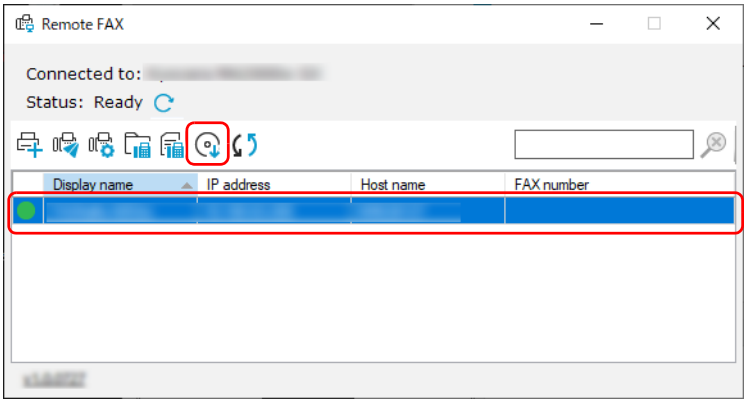

Note Installation on Windows must be done by a user logged on with administrator privileges.
If the User Account Control screen is displayed, click Yes (allow).

2 Select devices to install drivers and click **Next >**.

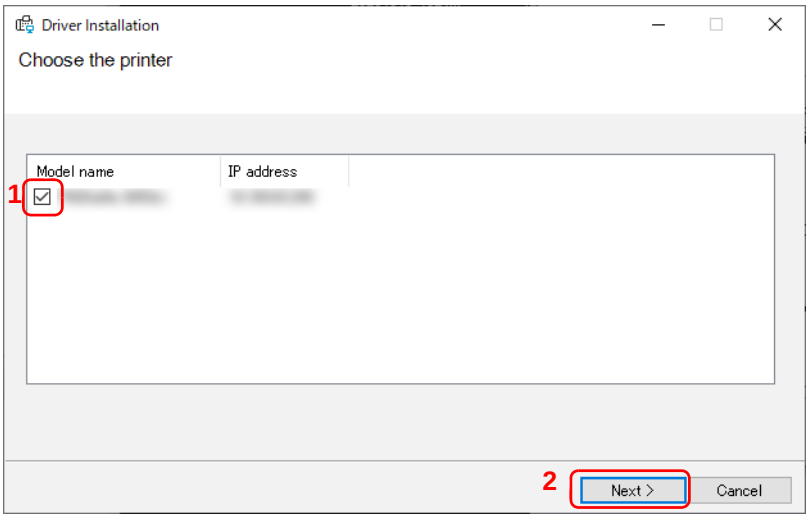

3 Check the print settings of the selected devices, and click **Next >**.

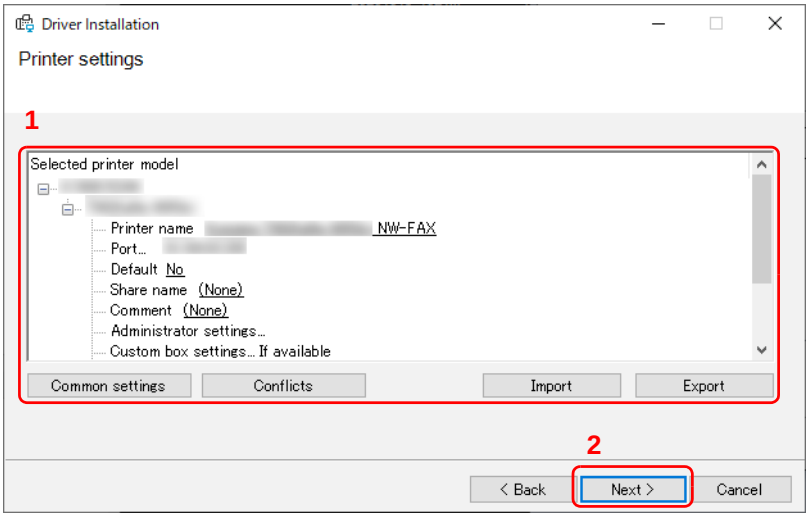

Note To set behavior in case of conflicts with other existing devices, click **Conflicts**.
To load an existing setting, click **Import** and select a file to be loaded.
To save the current setting, click **Export**.
Configurable items are same as the setting in the KYOCERA Net Viewer. For details, refer to KYOCERA Client Tool User Guide.

4 Check the contents of the setting, and click **Finish**.

Installation will start.

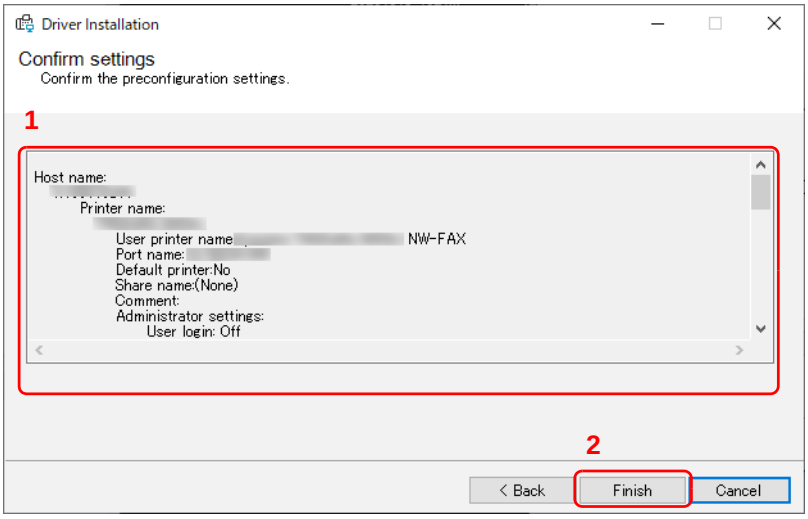

5 Click **OK**.

This completes the installation.

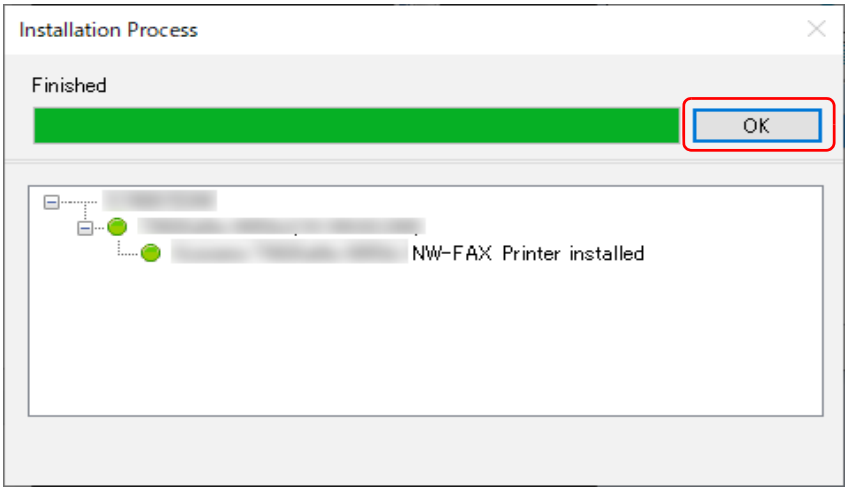

Sending Fax

Follow the steps below to send a document with remote fax.

1 Select a device to be used for remote fax, and click **Send FAX ( )**.

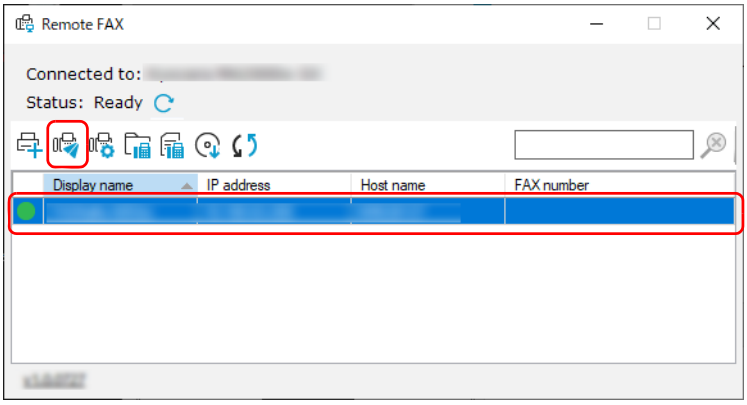

Note If a fax driver for the selected device is not installed, a confirmation screen appears. Click **Yes** to install a fax driver, or click **No** and select a different device.

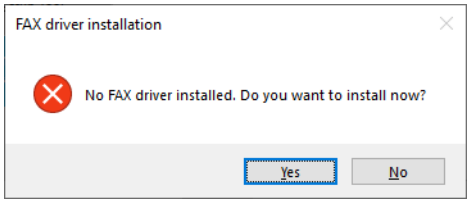

2 Select a document to be sent.

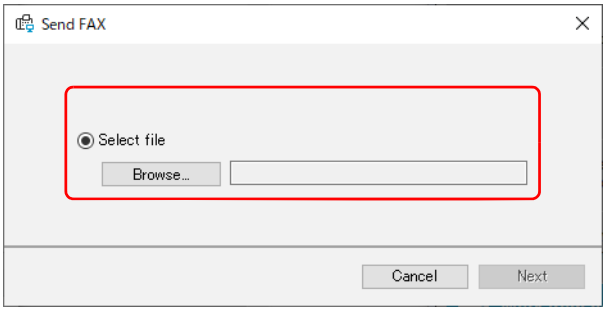

Item	Description
Select file*	Sends a document saved in your computer. Click Browse and select a file. Applicable file formats are as follows: .pdf, .txt, .doc, .docx, .ppt, .pptx, .xls, .xlsx, .xlsm, .jpeg, .jpg, .png, .gif, .bmp, .tiff, .tif

* Applicable file formats vary depending on softwares installed in your computer.

3 Click **Send**.

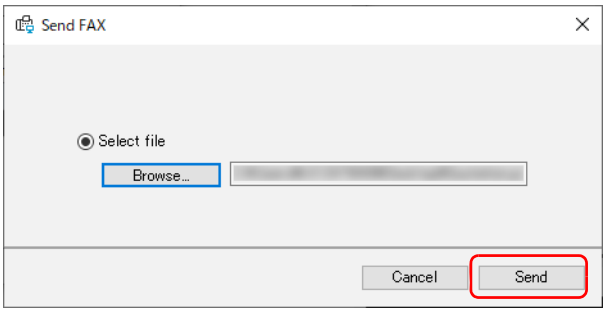

Note Click **Preview** to see the document to be sent.

4 Enter the destination, and click **Send**.

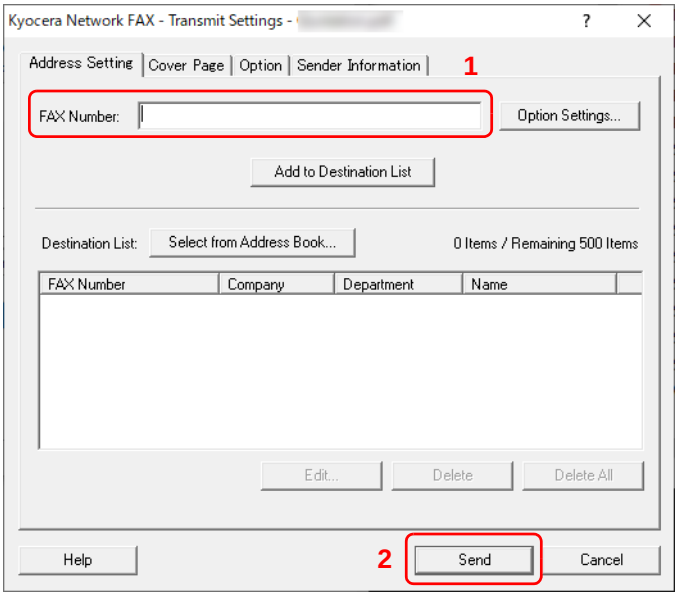

Note You can also select a destination from the address book, or send with a cover page attached. For details, refer to Chapter 6 "Sending Faxes from PC" of the Operation Guide of the fax remotely connected.

Checking Received Fax

Follow the steps below to check fax sent to your company.

1 Select a device that received fax, and click **Document box ( )**.

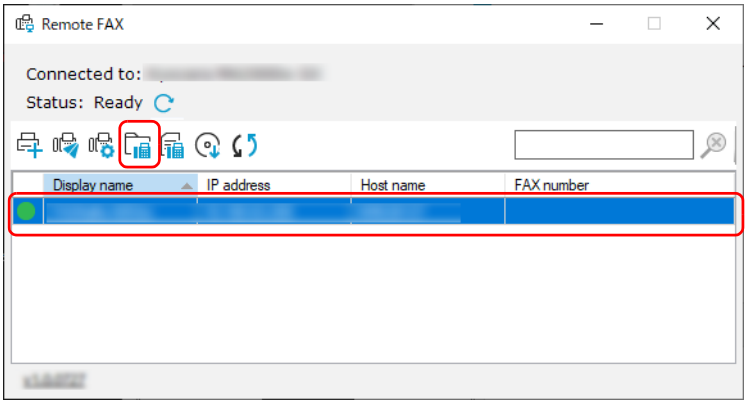

2 Select a received document.

Received fax will be displayed.

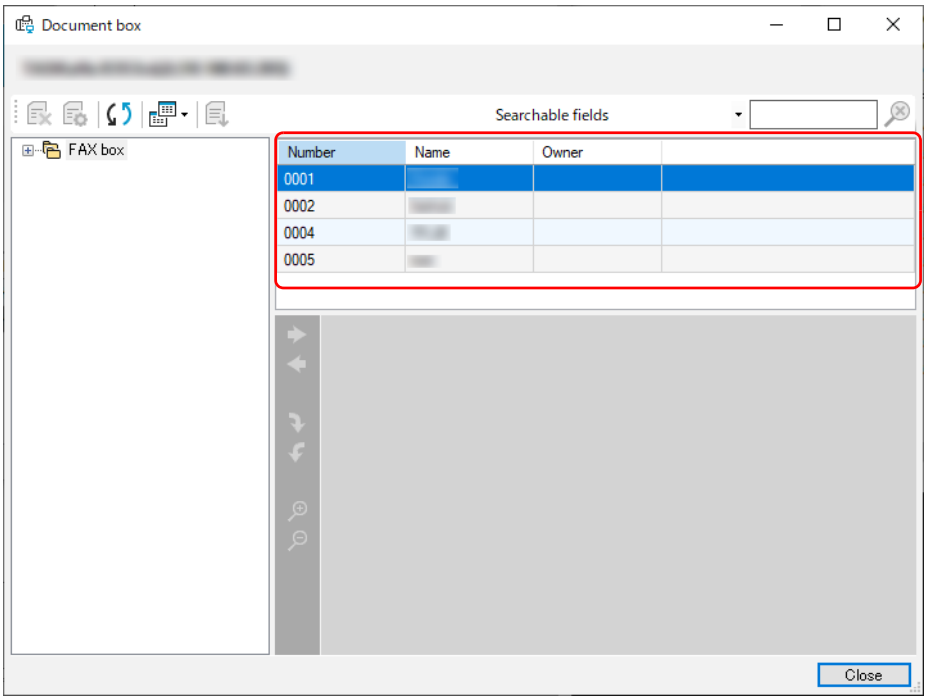

Note If a password is set to a box, enter a correct password.
Documents cannot be printed or downloaded from the fax memory RX box.

Configuring Notification Setting when Fax is Received

Follow the steps below to configure the notification setting when fax is received.

1 Select a device to be configured, and click **FAX receive notification settings ( )**.

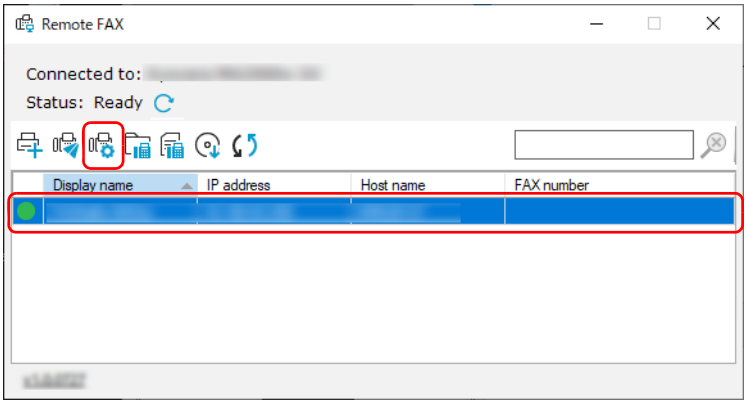

2 Configure the notification setting.

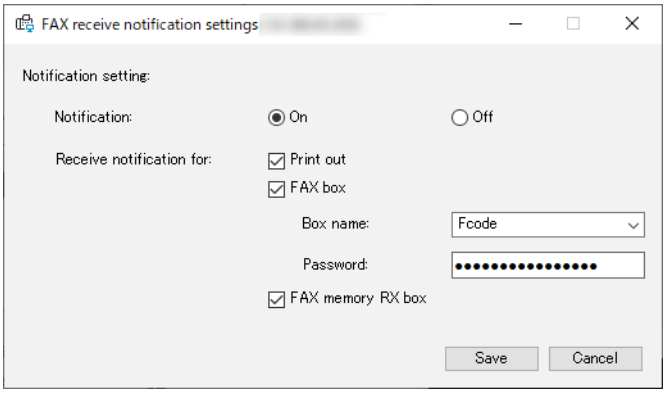

Item		Description
Notification		Select whether to notify reception.
Receive notification for	**Print out**	Select to notify when printing is complete.
	FAX box/ Subaddress box	Select to notify when received fax in a specified fax box or subaddress box. Specify a box name, and enter a password when a box is protected by a password.
	FAX memory RX box	Select to notify when received fax in the fax memory RX box.

3 After the setting is complete, click **Save**.

Configuring Communication Settings of Device

Follow the steps below to configure the communication settings of a device. Settings are to be performed for each device.

1 Select a device to be configured, right-click it, and click **Communication settings**.

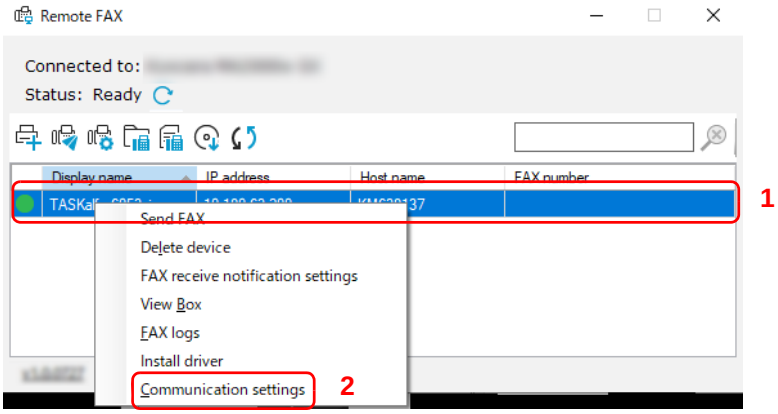

2 Configure the communication settings.

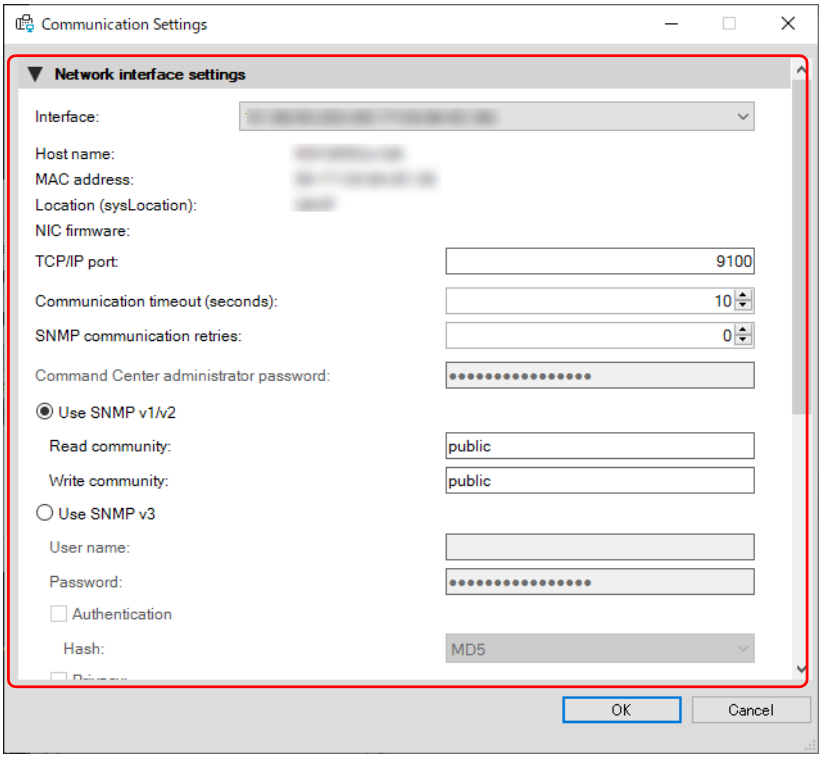

Note Configurable items are same as the setting in the KYOCERA Net Viewer. For details, refer to KYOCERA Client Tool User Guide.
For information required for the setting, contact the administrator of the connecting network.

3 After the setting is complete, click **OK**.

Checking Incoming/Outgoing fax logs

1 Select a device to check a log, and click **FAX logs ( )**.

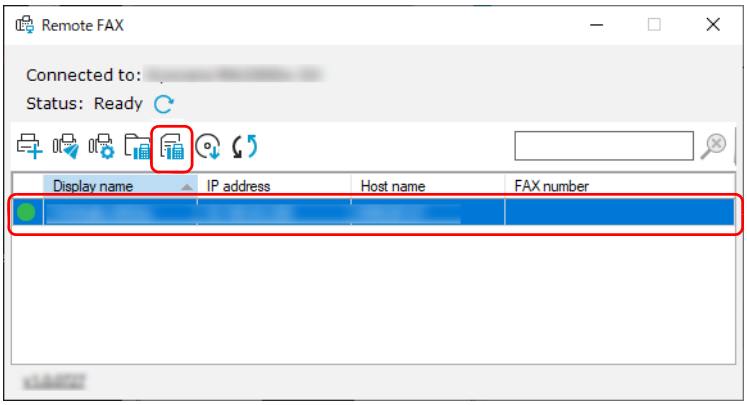

2 Select a log and click **Properties** ( ).

A log detail screen will appear.

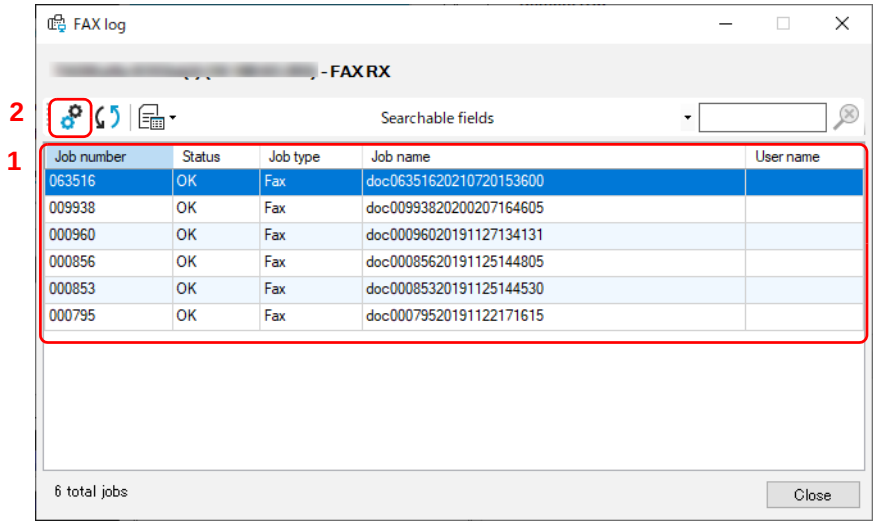

Note To refresh the log list, click **Refresh** ( ).
To switch the logs to be displayed, click **Logs filter** ( ). Incoming or outgoing fax logs can be displayed.
To search logs, enter text to the search box.
Number of logs that can be displayed changes depending on the device.

Checking Counter

You can check the print count.

Note To use this function, Microsoft .NET Framework 4.8 or later is required to be installed.

This function cannot be used when scanning originals, or when the Configuration, Preset, or Maintenance Menu screen is displayed.

1 Start KYOCERA Client Tool according to the description in *Accessing KYOCERA Client Tool* on page *3-35*.

2 Click **Counter** in the **Work-from-home** tab. The Counter screen appears.

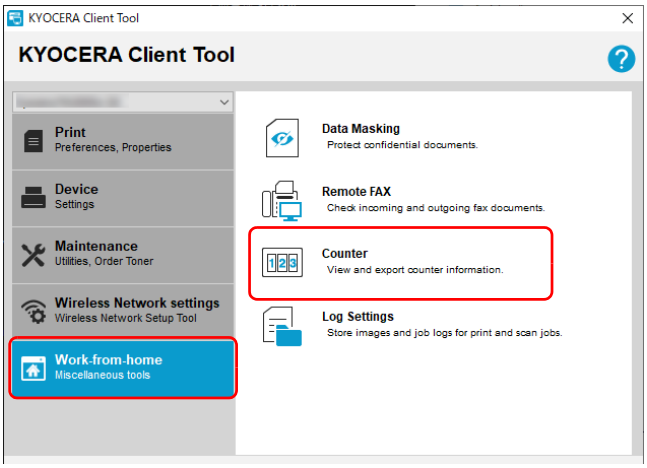

3 Check the counter.

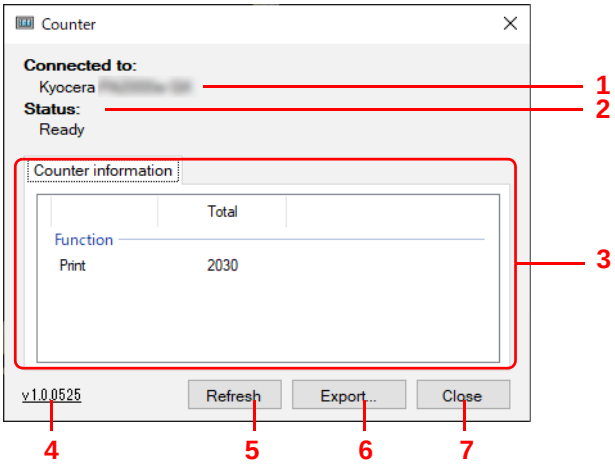

No.	Item	Description
1	**Connected to**	Displays the connected device.
2	**Status**	Displays the status of connected device.
3	**Counter information**	Displays the counter information.
4	**Version**	Displays the version of the counter tool.
5	**Refresh**	Refreshes the displayed counter information.
6	**Export**	Exports the counter information as CSV data.
7	**Close**	Closes the Counter screen.

Using Log Settings

Store images and job logs for print jobs. Stored logs are used for tracking printed documents.

Note To use this function, you must install Microsoft .NET Framework 4.8 or later.
To configure this function or to successfully export the log files to your server, you must be connected to your company network using an LDAP account.
The print image logs stored in your computer and log files exported to your server contain only original print data without the driver settings.
The print image logs may include print jobs that have been canceled or restarted.

Starting Log Settings

1 Start KYOCERA Client Tool according to the description in *Accessing KYOCERA Client Tool* on page *3-35*.

2 Click **Log Settings** in the **Work-from-home** tab.

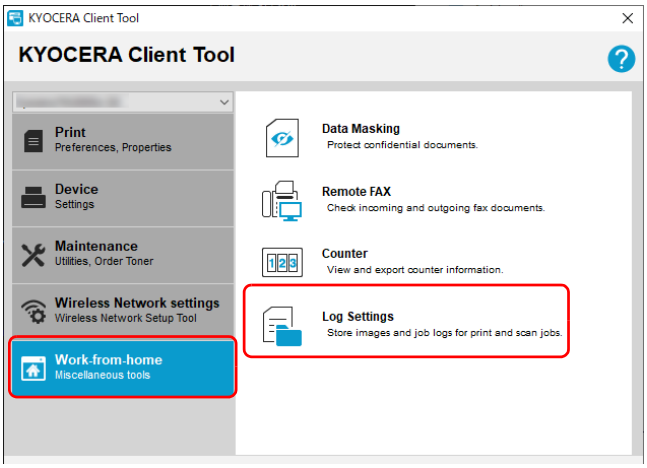

The Log Settings screen is displayed.

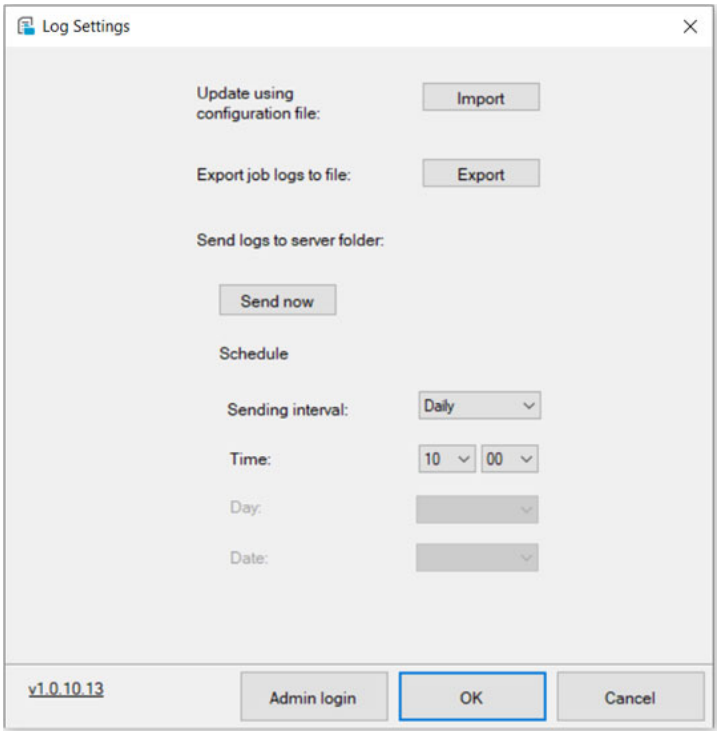

Operations during the Initialization of Log Setting

The following screen is displayed when you initialize the log settings.

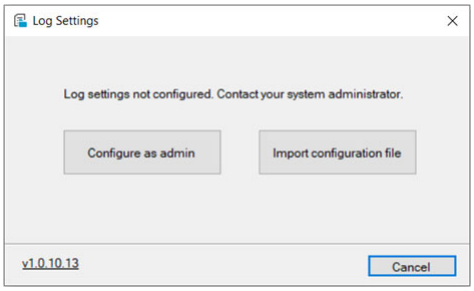

Operation method will differ depending on the user privileges.

For users with administrator privileges

Click on "**Configure as admin**" to configure the server settings necessary to use the log settings. You can also generate configuration files that are necessary for users without administrator privileges to use the log settings. You must be logged in with administrator privileges. For details, refer to *Configuring the Log Settings (Administrator)* on page *5-16*.

For users without administrator privileges

Click on "**Import configuration file**" to load the configuration file provided by a user with administrator privileges. You can then configure settings such as scheduling a log transmission. For details, refer to *Configuring the Log Settings (Users)* on page *5-19*.

Configuring the Log Settings (Administrator)

This section will show you how to configure the log settings (administrator).

You must be logged in with administrator privileges.

1 Click **Admin login**.

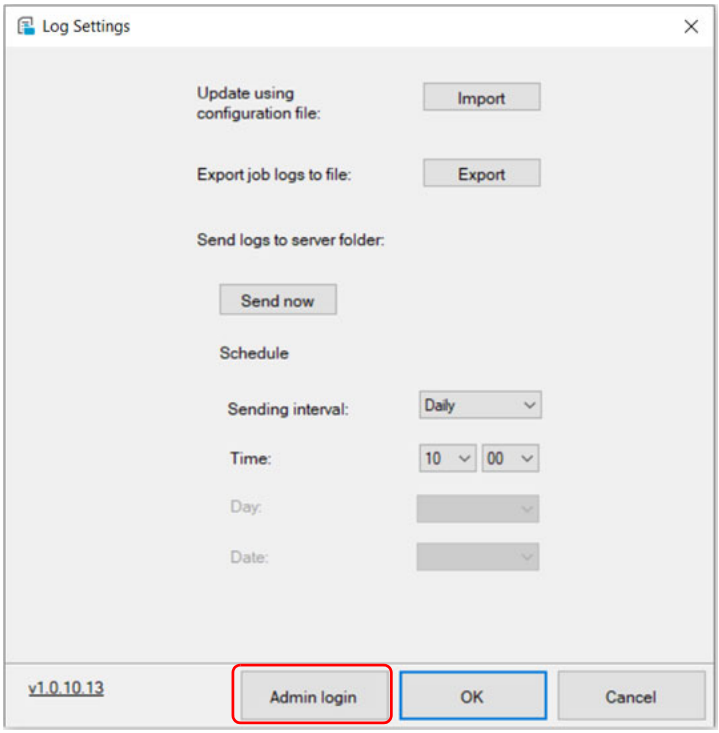

2 Enter the LDAP server connection parameters and click "**OK**."

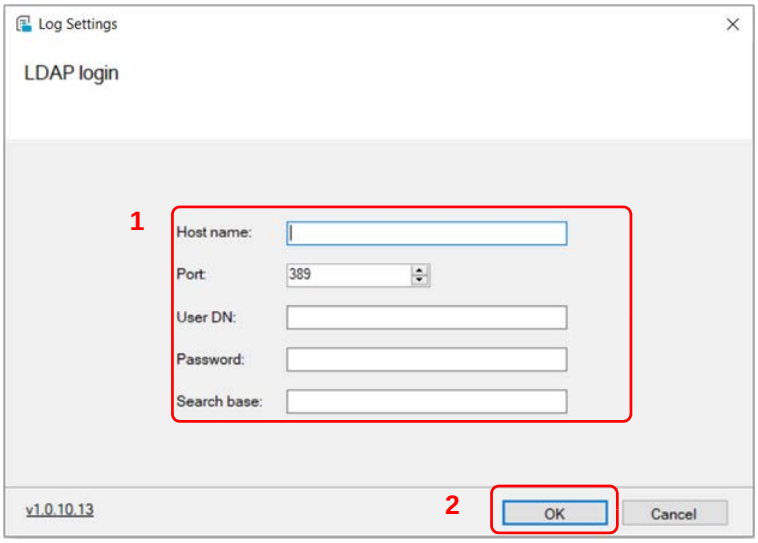

Note Please check with your LDAP server administrator for the information necessary to configure the settings.

3 Configure the necessary items and click "**OK**."

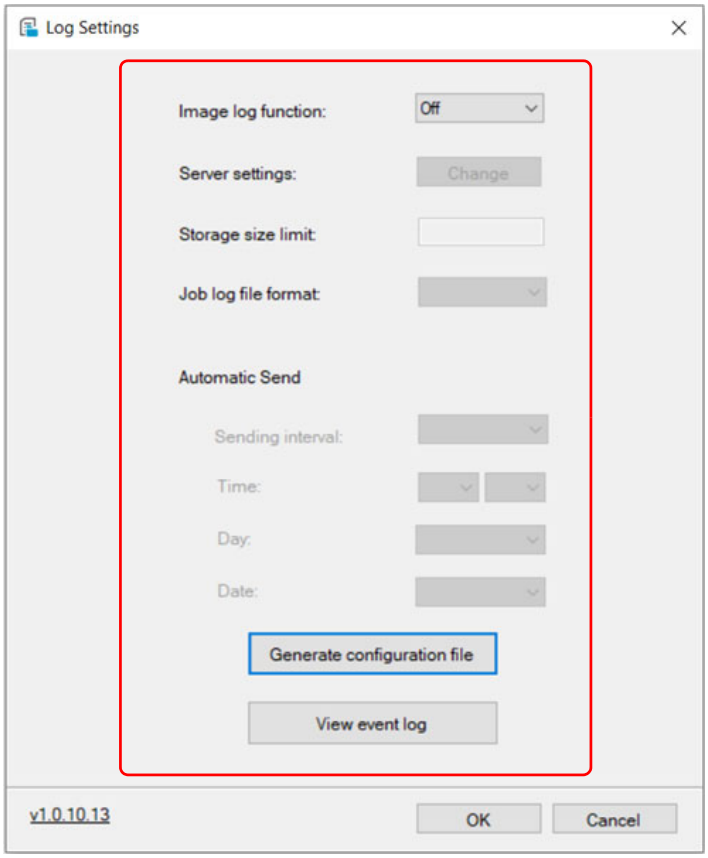

Item		Description
Image log function		Sets whether to enable the log settings or not.
Server settings		Configures the settings to connect to the log-sending server. Click "**Change**" and configure the server. 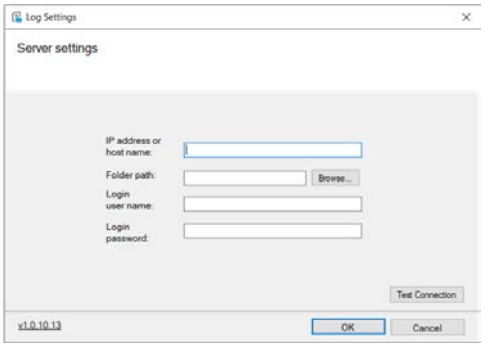 Please check with your destination server's administrator for the information necessary to configure the settings.
Storage size limit		Sets the capacity of the log to be saved. Value: **100 to 10,000 MB** **Note** A notification is displayed to the user depending on the limit status. From the storage limit notification dialog, users can send the logs manually to the server folder by selecting **Send now**.
Job log file format		Sets the file format of the output log files. Value: **XML**, **CSV**
Automatic send	**Sending interval**	Sets the interval for automatically sending the logs to the server. Value: **Daily**, **Weekly**, **Monthly**
	Time	Sets the time for automatically sending the logs to the server. This can be set when "**daily**" is set for the "**sending interval**." Value: **00:00 to 23:59**
	Day	Sets the days of the week for automatically sending the logs to the server. This can be set when "**weekly**" is set for the "**sending interval**." Value: **Monday**, **Tuesday**, **Wednesday**, **Thursday**, **Friday**, **Saturday**, **and Sunday**
	Date	Sets the dates for automatically sending the logs to the server. This can be set when "**monthly**" is set for the "**sending interval**." Value: **1 to 31** **Note** If the date selected is not available for a specific month, then log files are sent on the last day of that month. For example, if selected date is 31, then for the month of April with only 30 days, the log files are sent on April 30.
Generate configuration file		Clicking this will generate the configuration file. The generated configuration file is used by users who do not have administrator privileges to use the log settings.

Item	Description
View event log	Displays the change history of the log settings. 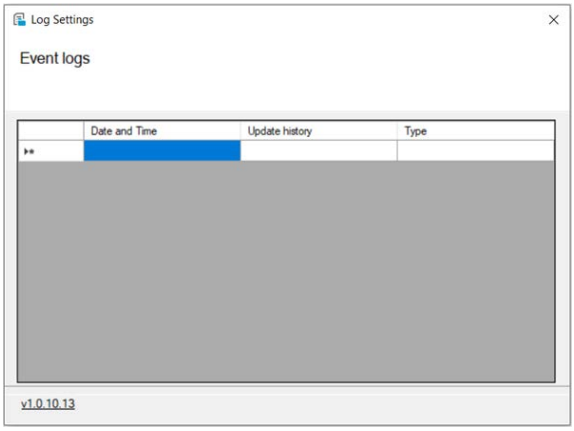

Configuring the Log Settings (Users)

This section will show you how to configure the log settings (users).

1 Configure the necessary items and click “**OK**.”

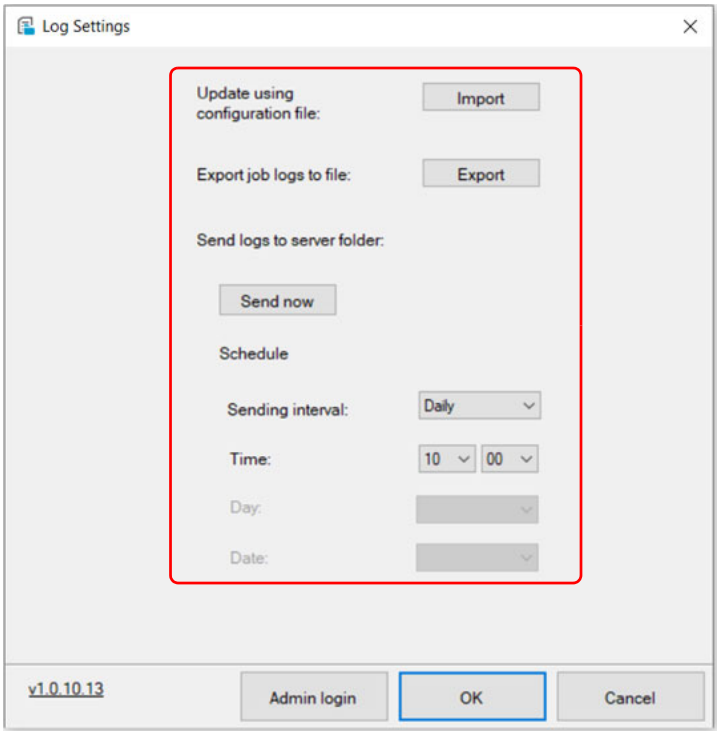

Item		Description
Update using configuration file		Log settings can be updated by clicking “**Import**” to load the configuration file provided by a user with administrator privileges. 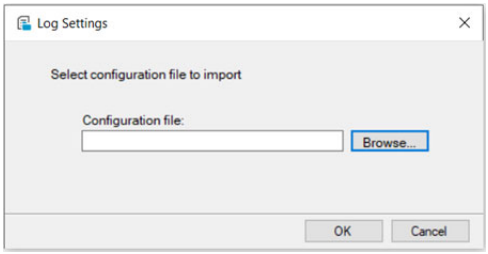
Export job logs to file		Click “**Export**” to output the job logs to a file.
Send logs to server folder		Click “**Send now**” to manually send the logs.
Schedule	**Sending interval**	Sets the interval for automatically sending the logs to the server. Value: **Daily**, **Weekly**, **Monthly**
	Time	Sets the time for automatically sending the logs to the server. This can be set when “**daily**” is set for the “**sending interval**.” Value: **00:00 to 23:59**
	Day	Sets the days of the week for automatically sending the logs to the server. This can be set when “**weekly**” is set for the “**sending interval**.” Value: **Monday**, **Tuesday**, **Wednesday**, **Thursday**, **Friday**, **Saturday**, **and Sunday**
	Date	Sets the dates for automatically sending the logs to the server. This can be set when “**monthly**” is set for the “**sending interval**.” Value: **1 to 31** **Note** If the date selected is not available for a specific month, then log files are sent on the last day of that month. For example, if selected date is 31, then for the month of April with only 30 days, the log files are sent on April 30.

6 Maintenance

General Information

This chapter describes basic maintenance tasks you can perform for the printer. You can replace the toner cartridge according to the printer's status:

Also, the internal parts need periodic cleaning.

Toner Cartridge Replacement

Just before the toner is used up, the **Main Power** indicator will turn off, the **Attention** indicator will light up, and the printer will stop.The toner cartridge must then be replaced immediately.

Printing can be continued by pressing [**Main Power**] (⏻) 5 times. but, we cannot guarantee the print quality. If the print is getting faint, replace the toner cartridge with a new one.

IMPORTANT Once the toner cartridge is installed, use it until the replacement message comes out. Do not replace it with the another toner cartridge in the middle of using it.
In case a toner cartridge used is used in the another machine, the toner remaining amount display or the toner empty detection might be indicated wrongly.

Frequency of toner cartridge replacement

According to ISO/IEC 19752 the toner cartridge can print as follows (A4/Letter paper is assumed): 1,500 pages

You can print a status page to check how much toner remains in the toner cartridge. The Toner Gauge in the consumables status section on the status page shows a toner percentage, which roughly represents how much toner is left in the toner cartridge.

Toner Kits

For best results, we recommend that you only use genuine Kyocera Parts and Supplies. Should any damage be caused by the application of a toner other than the original toner, then this damage is excluded from the guarantee.

A new toner kit contains the following items:

- Toner Cartridge
- Plastic waste bag for old toner cartridge
- Installation Guide

Note Do not remove the toner cartridge from the carton until you are ready to install it in the printer.

Replacing the Toner Cartridge

This section explains how to replace the toner cartridge.

CAUTION Do not attempt to incinerate the Toner Cartridge. Dangerous sparks may cause burns.

KYOCERA Document Solutions Inc. is not liable against any damages or problems arising from the use of toner cartridges other than those designated as original Kyocera toner cartridges. For optimum performance, it is also recommended to use only the Kyocera toner cartridges which are specifically intended for use in your country or region.

Note You do not have to turn printer power off before starting the replacement. Any data that may be processing in the printer will be deleted if you turn the printer power off.

1 Open the top cover.

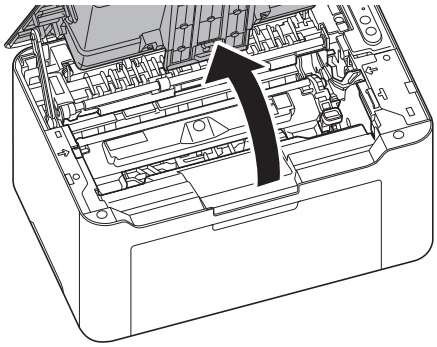

2 Push the toner cartridge lock button and then, lift the toner cartridge out of the machine.

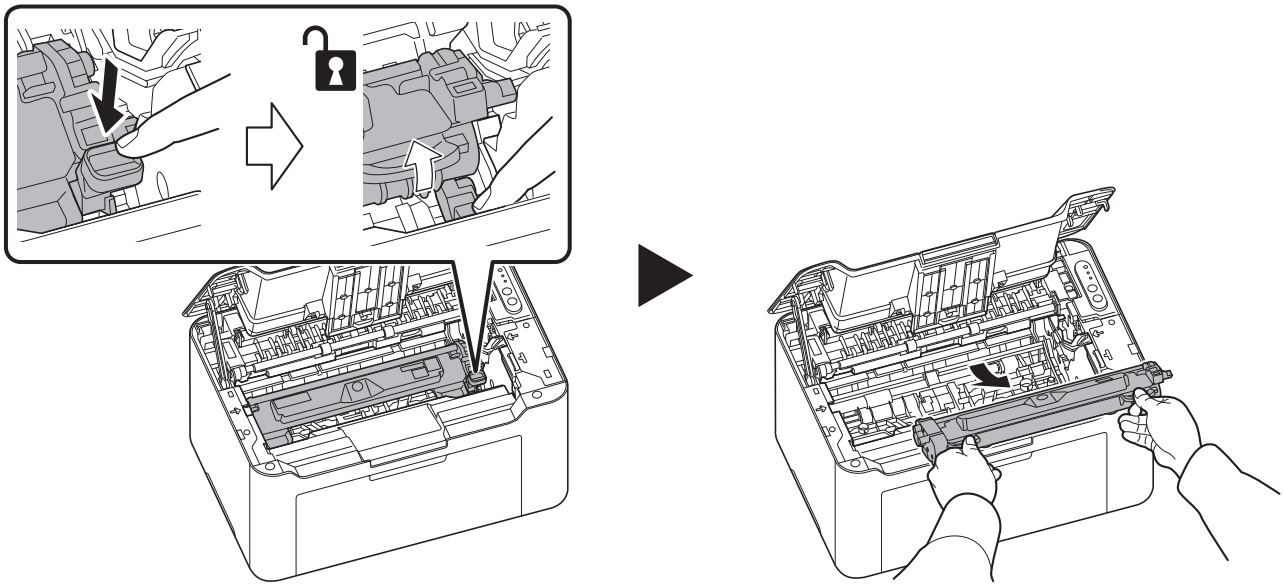

Note Put the old toner cartridge in the plastic bag (supplied with the new toner kit) and discard it later according to the local code or regulations for waste disposal.

3 Take the new toner cartridge out of the toner kit. Shake the new toner cartridge at least 5 times as shown in the figure in order to distribute the toner evenly inside the container.

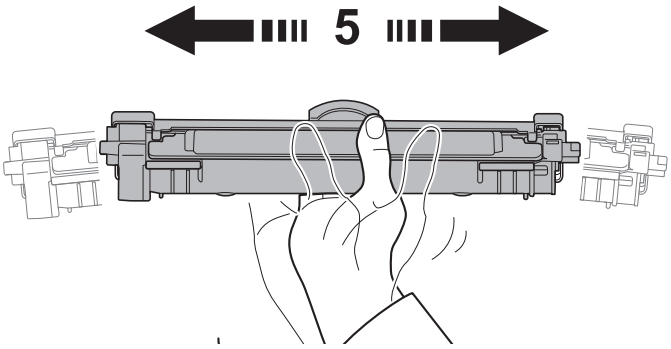

4 Remove the cover from the toner cartridge.

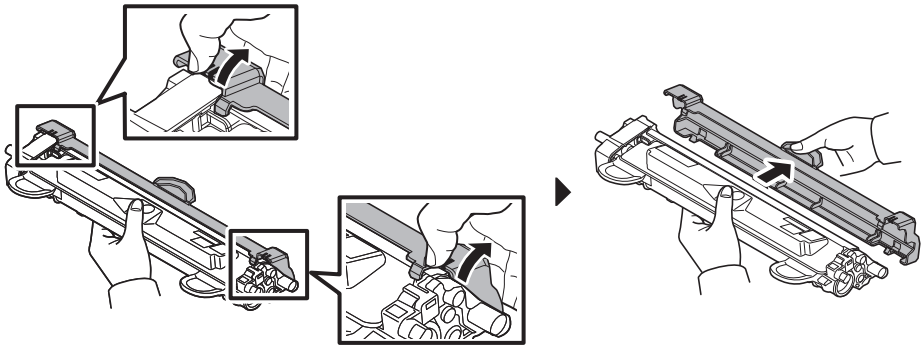

5 Set the new toner cartridge to its position, aligning the guides at both ends with the slots in the machine. After that, press the levers on both ends of the toner cartridge until they click.

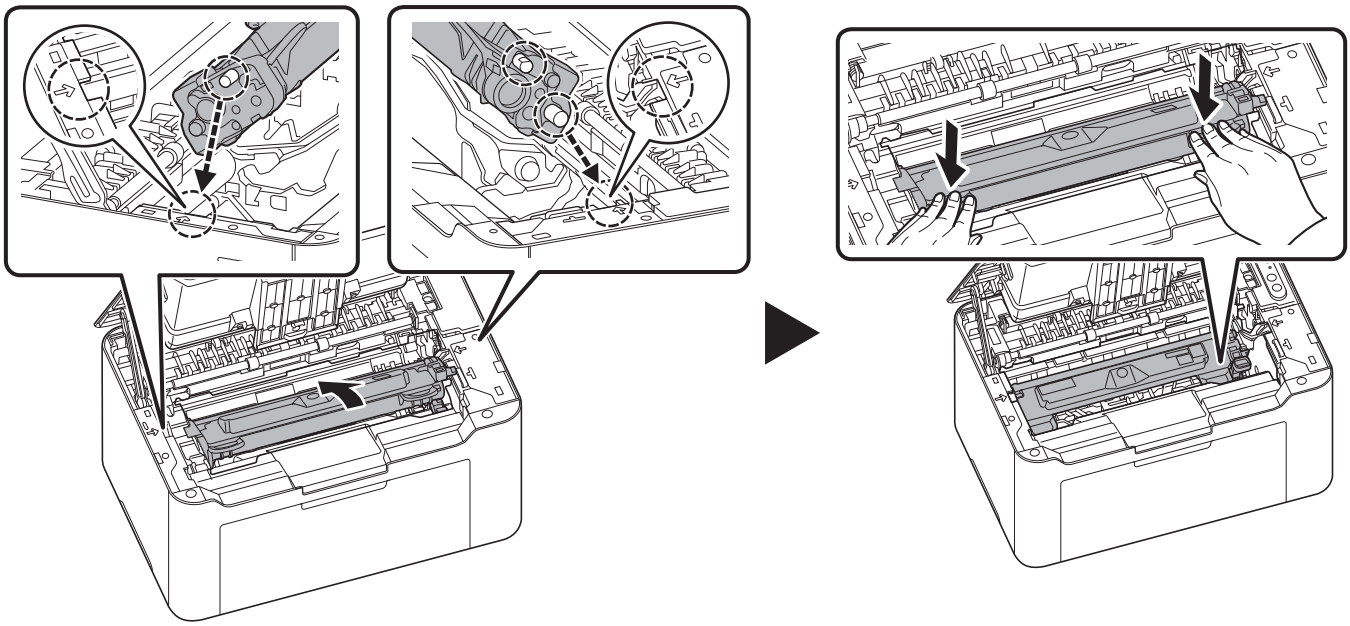

6 Press the center of the top cover to close.

Note Return the exhausted toner cartridge to your dealer or service representative. The collected toner cartridge will be recycled or disposed in accordance with the relevant regulations.

Drum unit Replacement

When the cumulative printing count reaches 10,000, the Attention Indicator flashes. Replace the drum unit immediately.

1 Open the top cover.

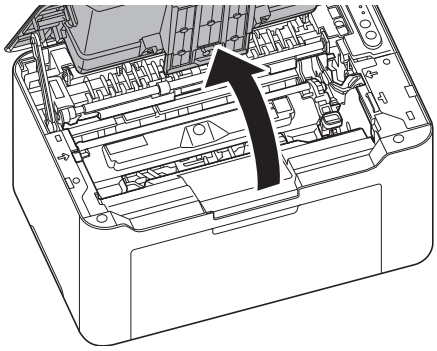

2 Push the toner cartridge lock button and then, lift the toner cartridge out of the machine.

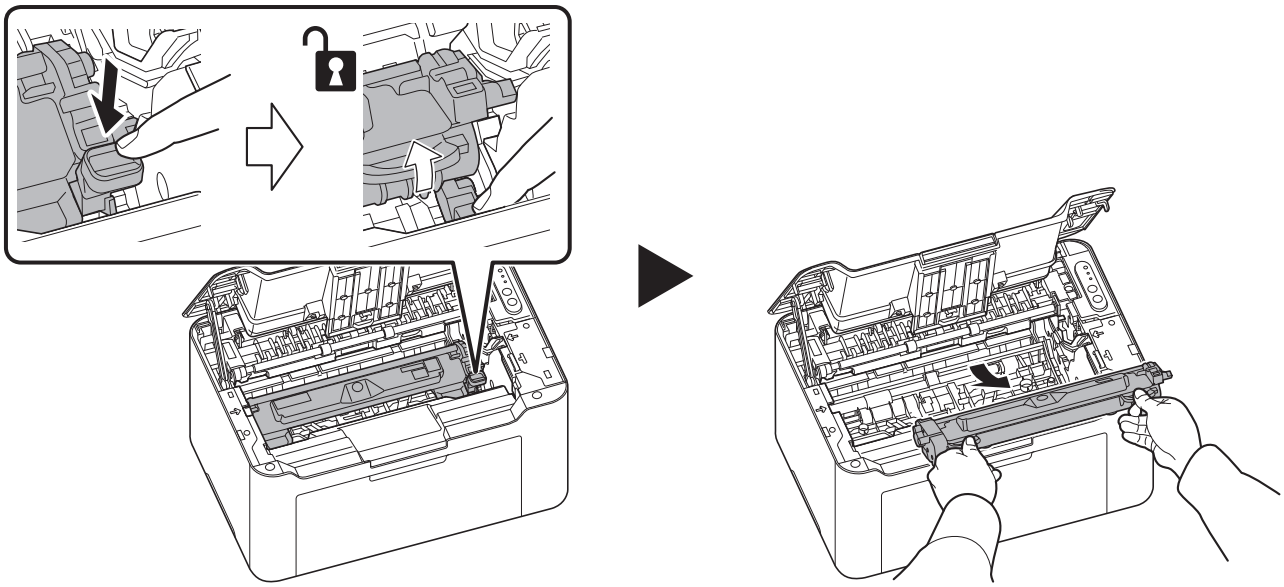

3 Pull up the drum unit lever, and remove the drum unit.

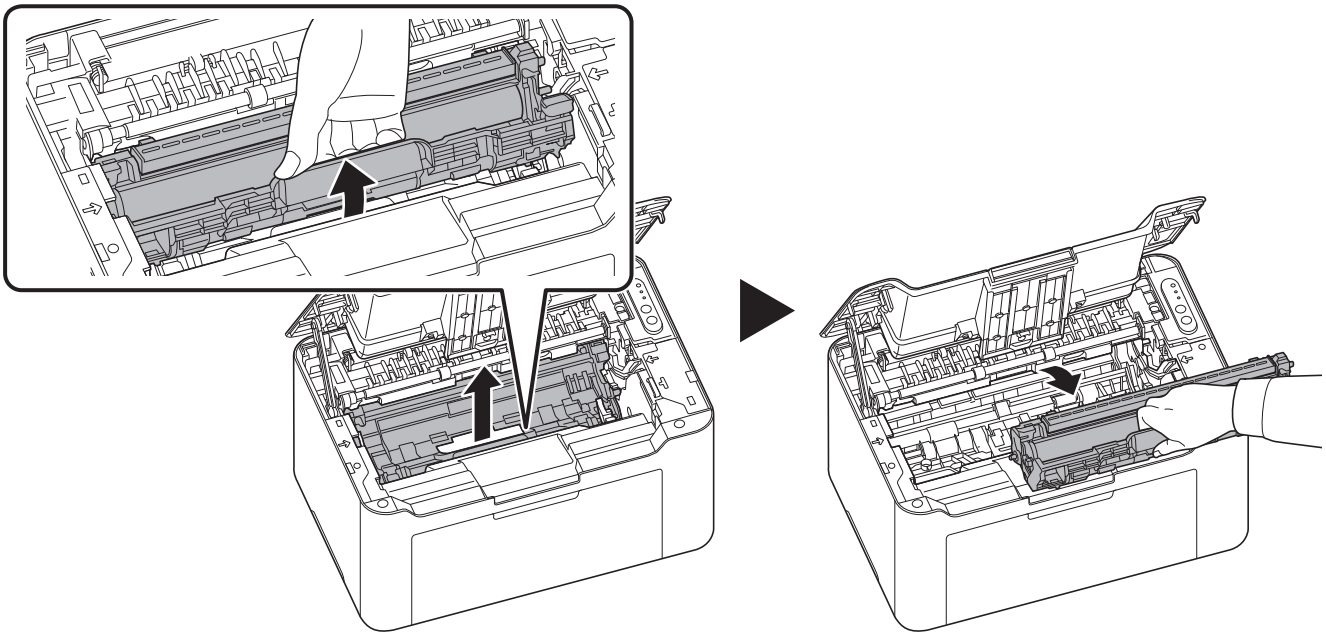

Note Put the old drum unit in the plastic bag (supplied with the new drum kit) and discard it later according to the local code or regulations for waste disposal.

4 Take the new drum unit out of the drum kit.

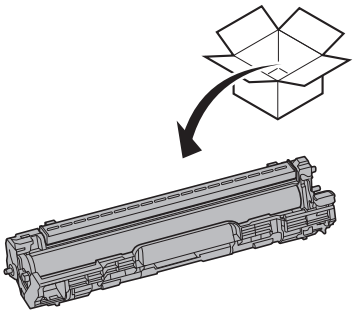

5 Return the new drum unit to its position, aligning the guides at both ends with the slots in the machine. After that, press down the drum unit lever until they click.

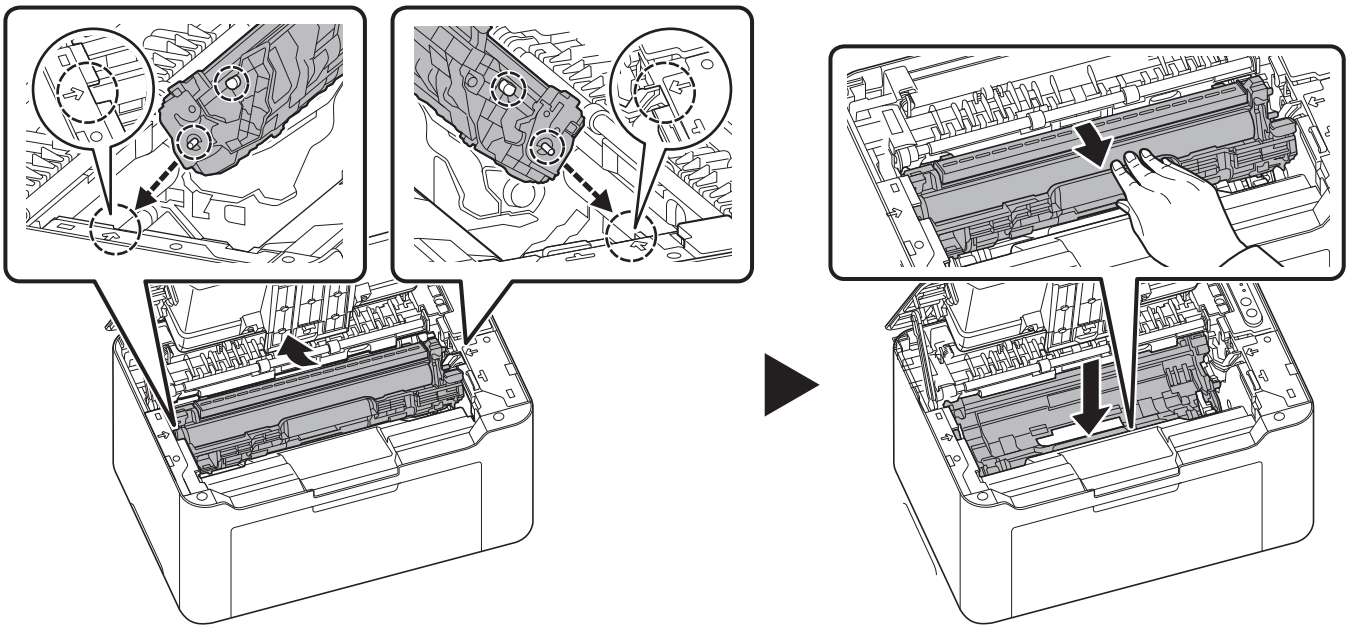

6 Set the toner cartridge to its position, aligning the guides at both ends with the slots in the machine. After that, press the levers on both ends of the toner cartridge until they click.

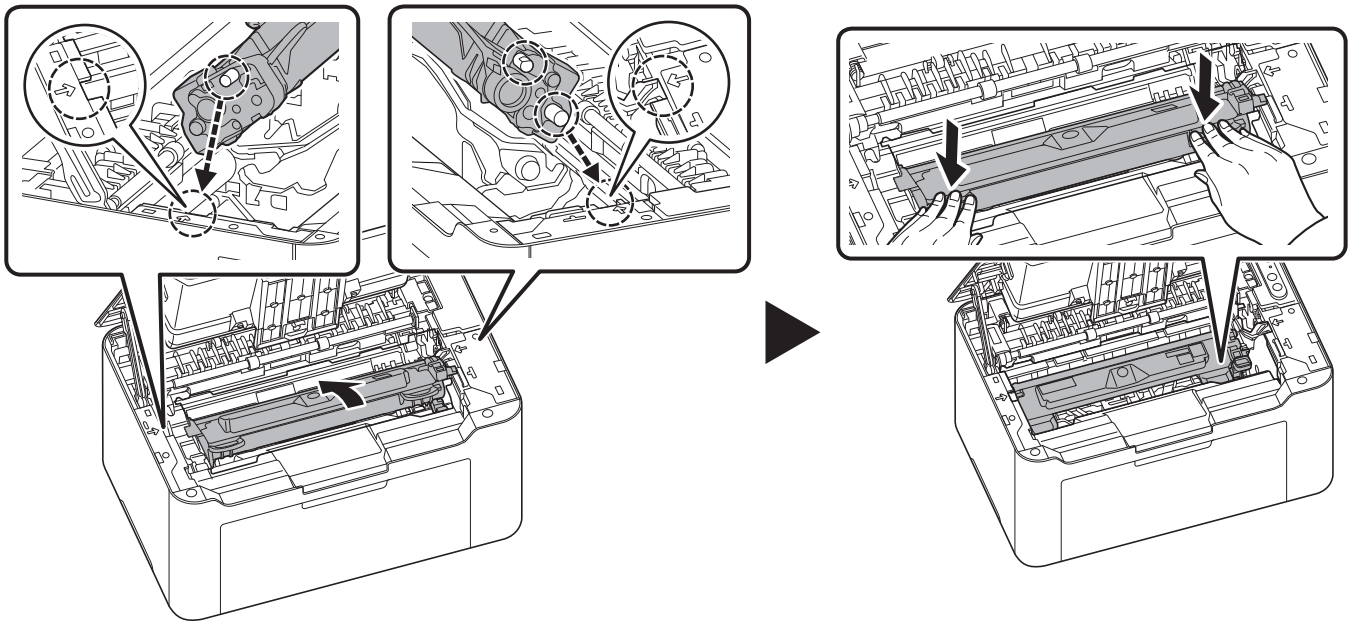

7 Press the center of the top cover to close.

Note If you hear a noise after closing the top cover, remove drum unit and toner cartridge and set them again.

8 Press [**Main Power**] (⏻) 8 times to stop flashing of the Attention Indicator.

Note You can also stop flashing of the Attention Indicator from the Maintenance Menu of the KYOCERA Client Tool. Refer to *Maintenance Menu* on page *6-14*.

Cleaning the Printer

To avoid print quality problems, the interior of the printer must be cleaned with every toner cartridge replacement.

Note Place the removed toner cartridge and drum unit on a sheet of paper to prevent staining other items.

1 Open the top cover.

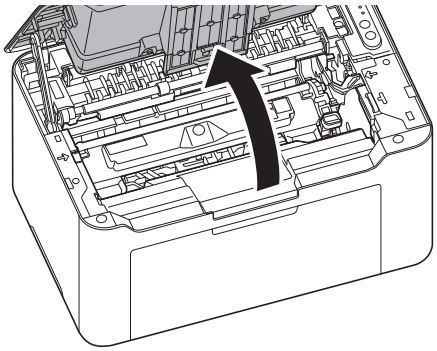

2 Push the toner cartridge lock button and then, lift the toner cartridge out of the machine.

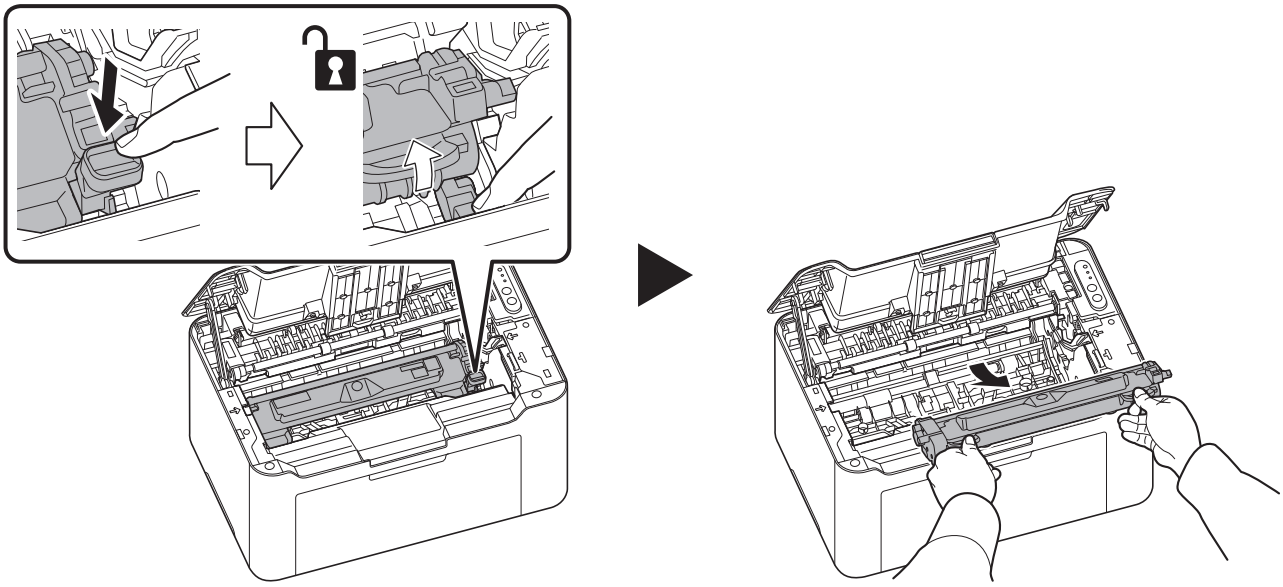

3 Pull up the drum unit lever, and remove the drum unit.

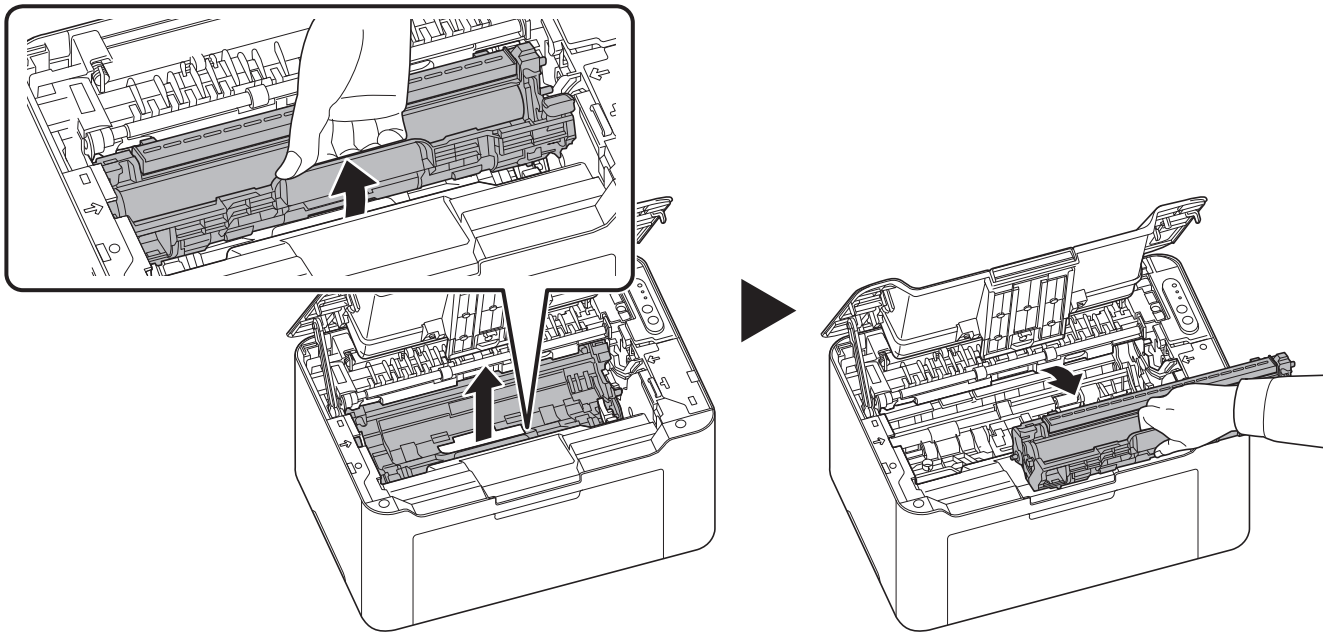

Note The drum unit is sensitive to light. Never expose the drum unit to light for more than five minutes.

4 Place the drum unit flat on a clean, level surface.

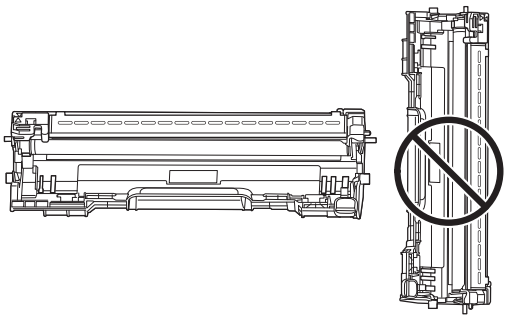

IMPORTANT Do not place the drum unit on end.

5 Open the charger cover.

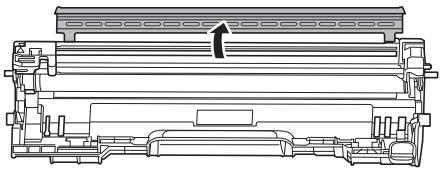

6 On the drum unit, slide the main charger cleaner (gray) back and forth 2 or 3 times to clean the charger wire, then return it to its original position (CLEANER HOME POSITION)

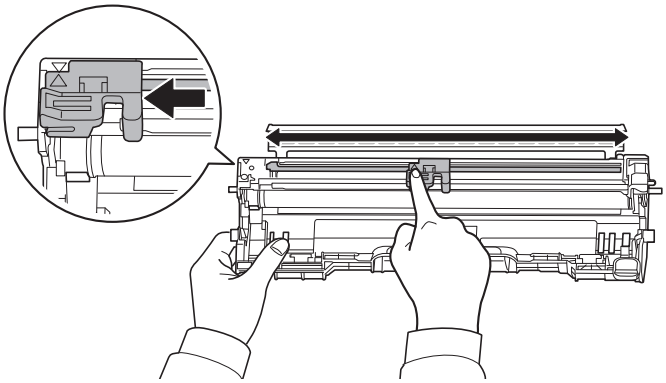

IMPORTANT Remove the fixing tape on the main charger cleaner before cleaning for the first time.
After cleaning, make sure you restore the main charger cleaner to its home position.

7 Close the charger cover.

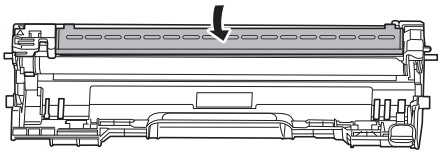

8 After cleaning, return the removed drum unit to its position, aligning the guides at both ends with the slots in the machine. After that, press down the drum unit lever until they click.

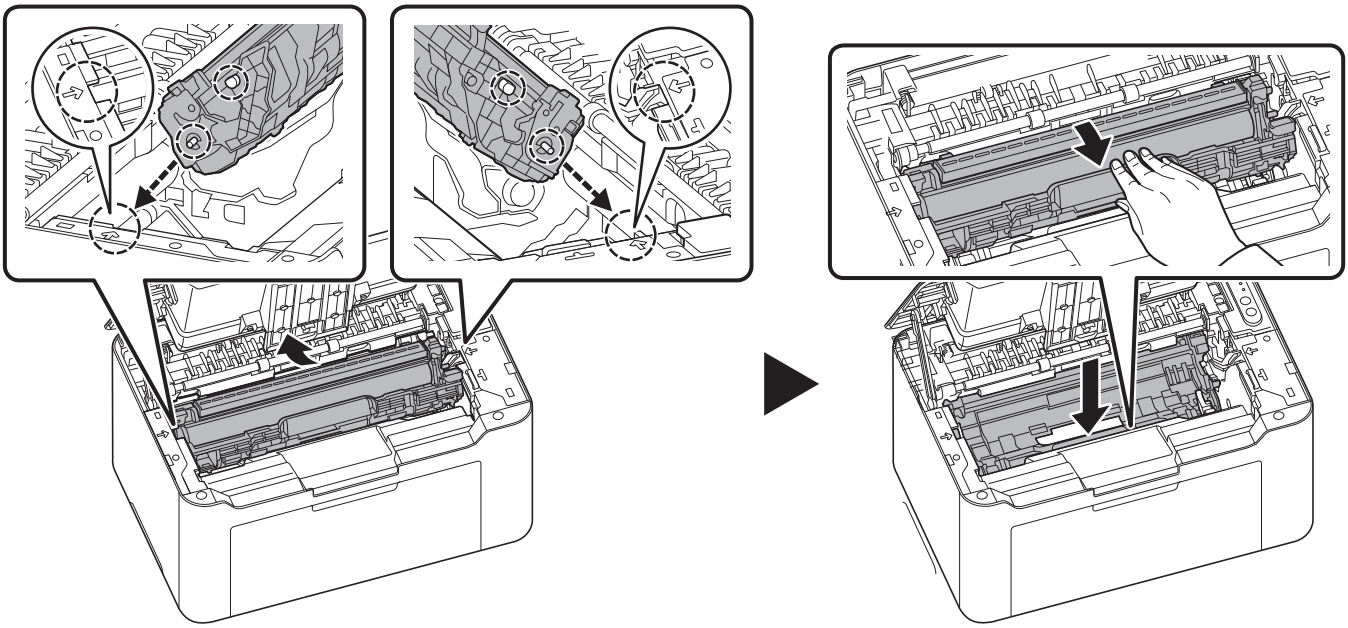

9 Set the toner cartridge to its position, aligning the guides at both ends with the slots in the machine. After that, press the levers on both ends of the toner cartridge until they click.

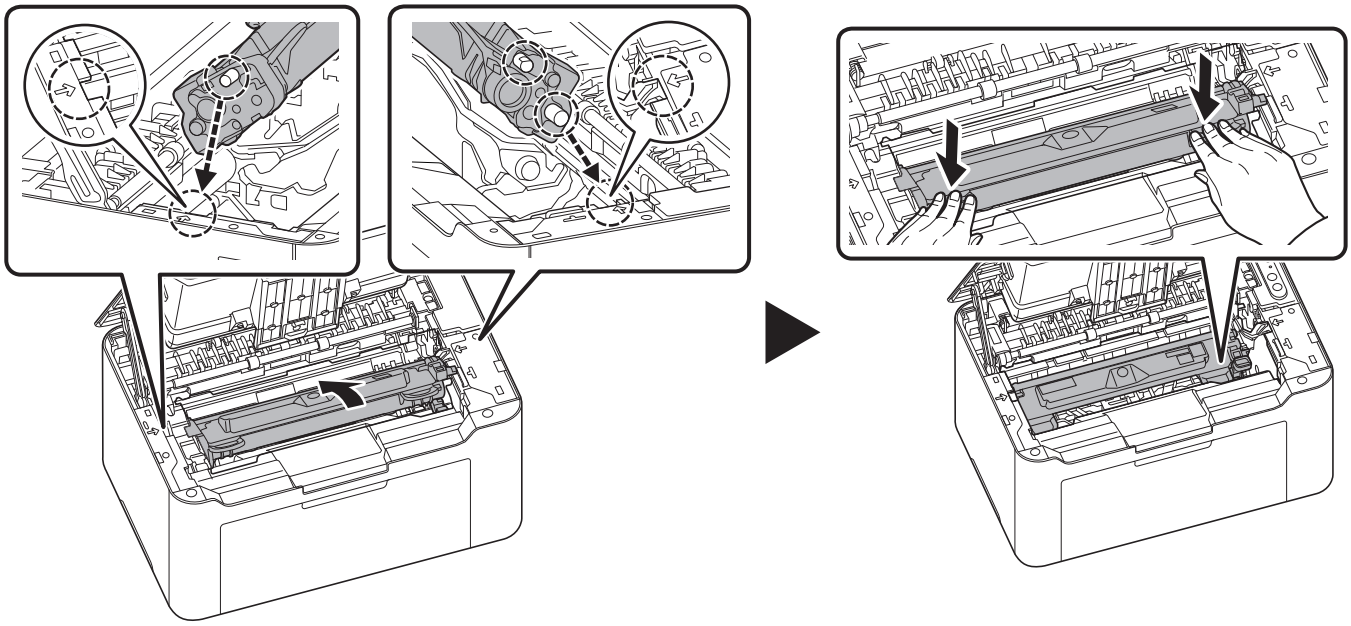

10 Press the center of the top cover to close.

Note If you hear a noise after closing the top cover, remove drum unit and toner cartridge and set them again.

Cleaning the Drum Unit

Clean the drum unit if black or white dots appear on printed pages.

Note Place the removed toner cartridge and drum unit on a sheet of paper to prevent staining other items.

1 Open the top cover.

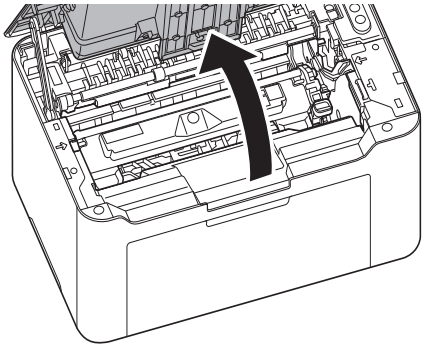

2 Push the toner cartridge lock button and then, lift the toner cartridge out of the machine.

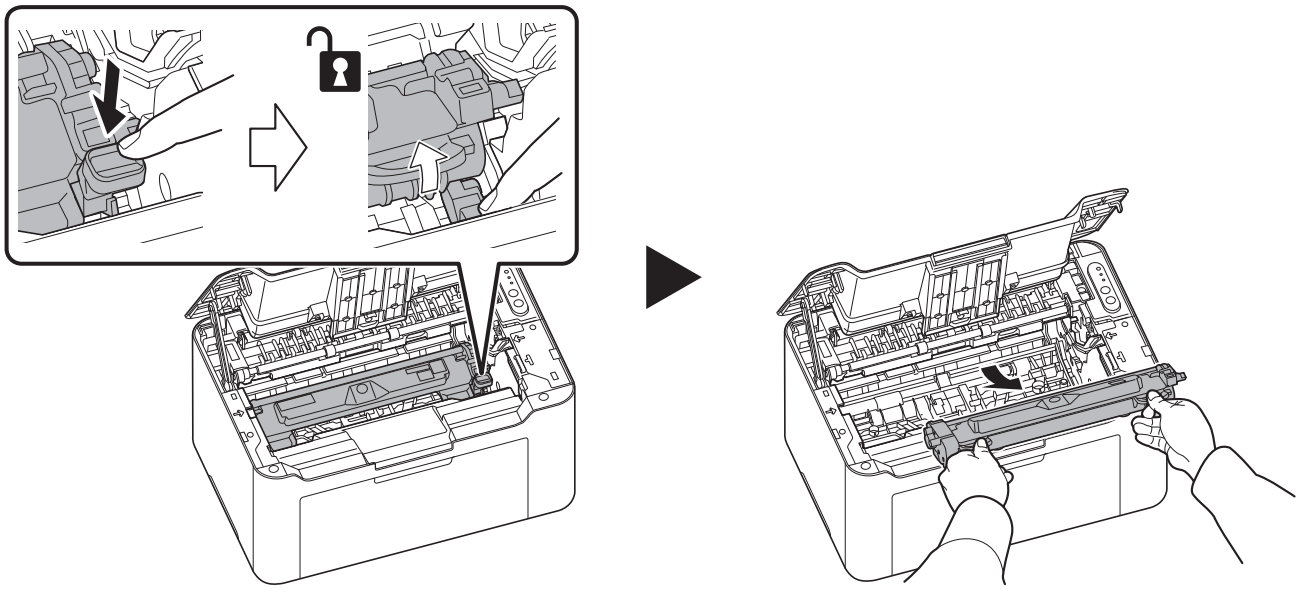

3 Pull up the drum unit lever, and remove the drum unit.

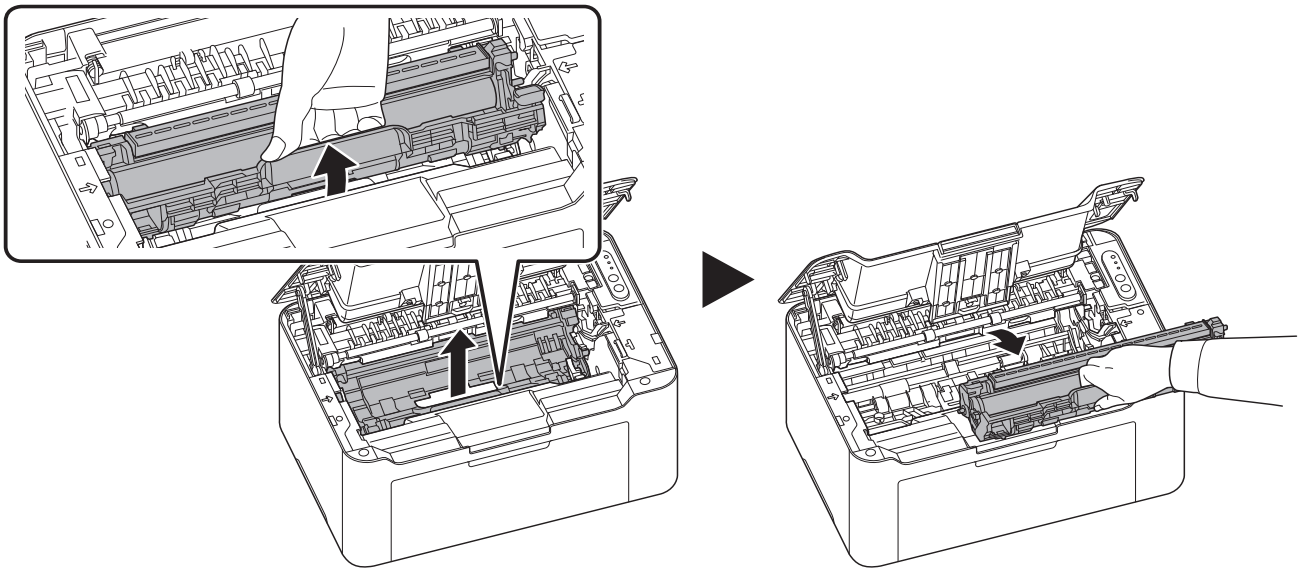

Note The drum unit is sensitive to light. Never expose the drum unit to light for more than five minutes.

4 Turn the drum unit gear by hand while looking at the surface of the drum roller.

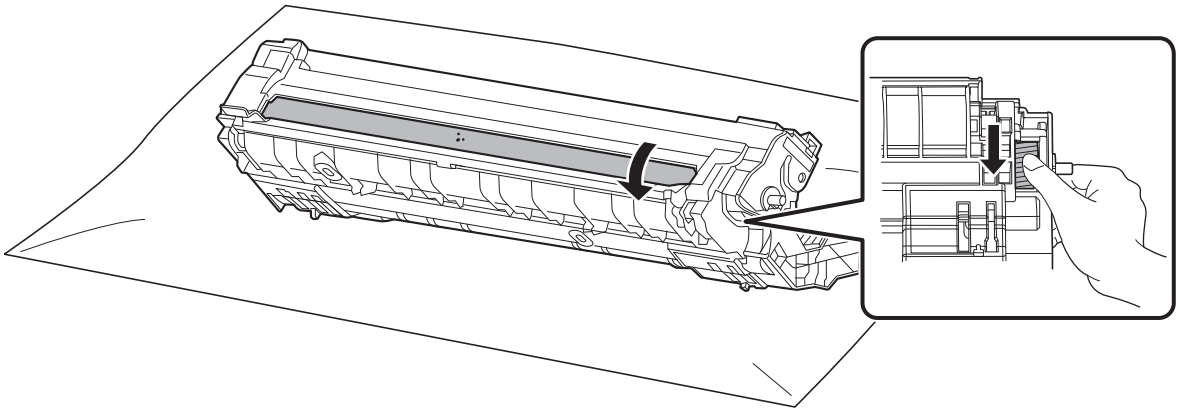

5 Wipe the surface of the drum gently with a dry cotton swab until the dust or glue on the surface comes off.

Note Do not use alcohol or any solvents when cleaning.

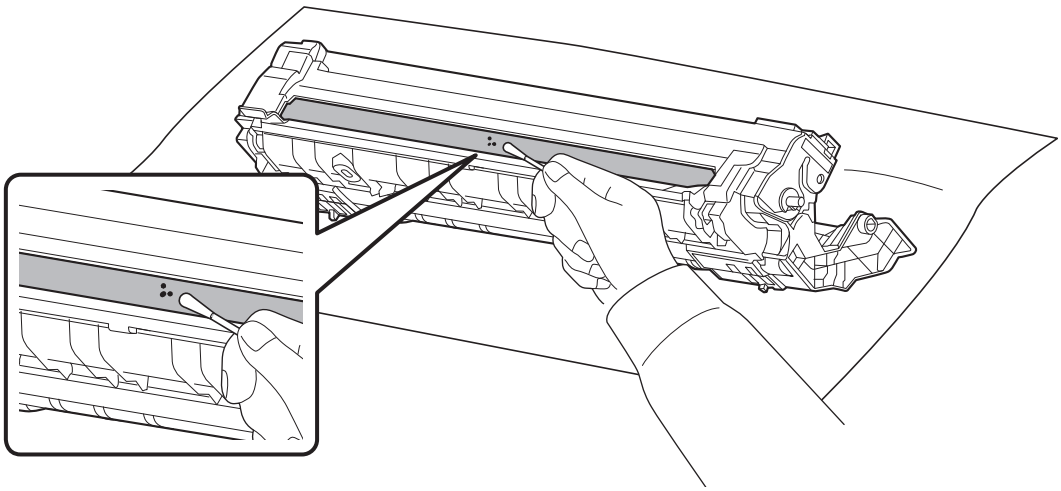

6 After cleaning, return the removed drum unit to its position, aligning the guides at both ends with the slots in the machine. After that, press down the drum unit lever until they click.

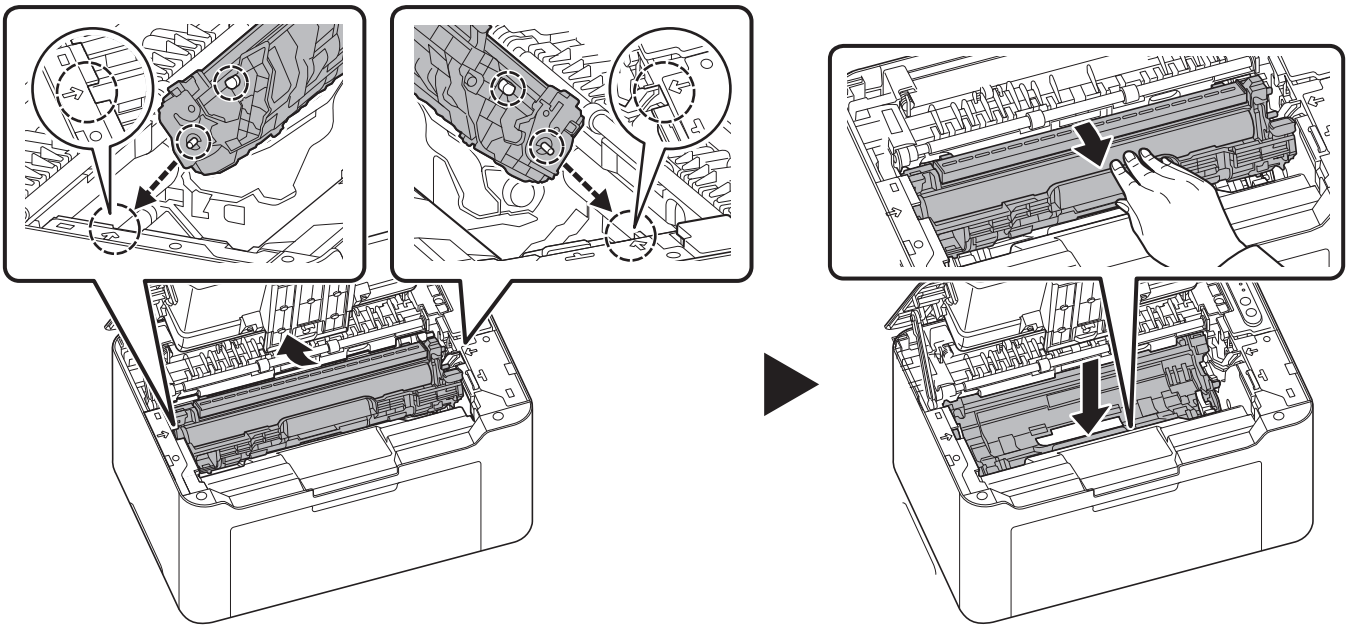

7 Set the toner cartridge to its position, aligning the guides at both ends with the slots in the machine. After that, press the levers on both ends of the toner cartridge until they click.

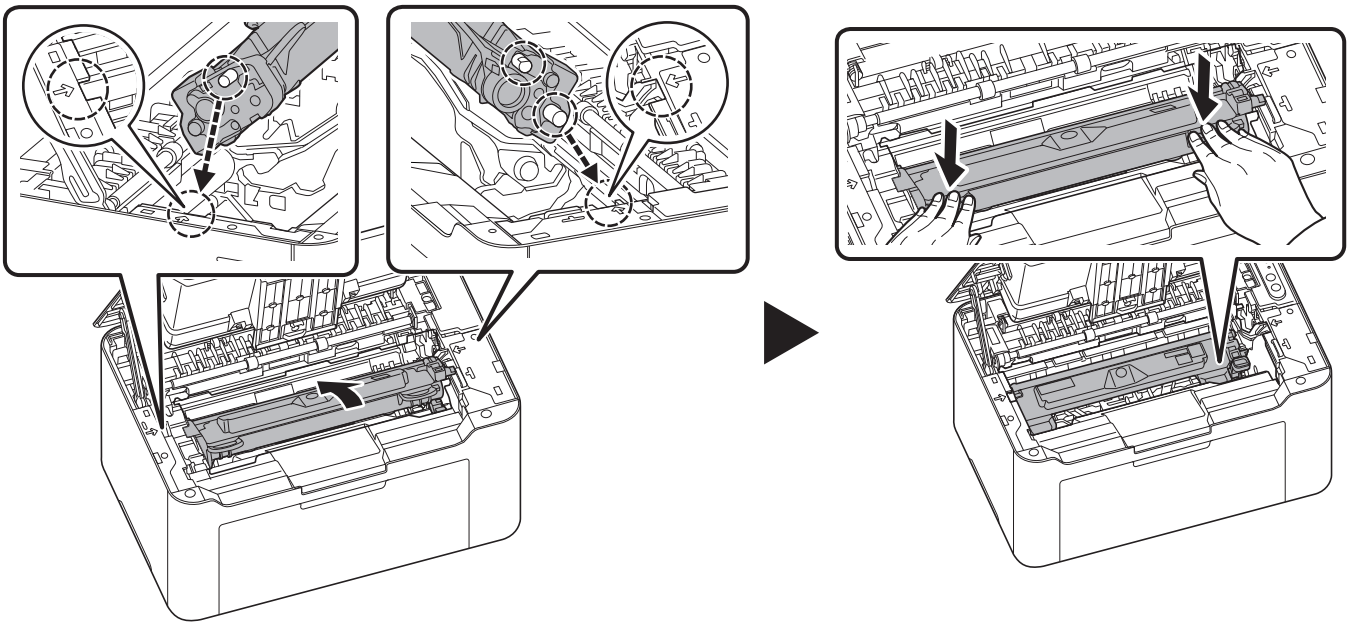

8 Close the top cover.

Note If you hear a noise after closing the top cover, remove drum unit and toner cartridge and set them again.

Maintenance Menu

The Maintenance Menu that the user can adjust from KYOCERA Client Tool is described below. In addition, also refer to *KYOCERA Client Tool User Guide*.

Maintenance Menu		Description
Adjust print quality	**Altitude setting**	If you are using the machine at an altitude of 1500 m or higher and print quality has deteriorated, the **Altitude setting** can be used to restore print quality.
Adjust print position	**Printing start position**	**Single-sided printing** Adjusts the position of the printed image. 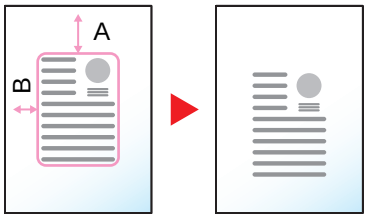 A: Top edge B: Left edge Top edge: 10
Restore factory default		Restore factory default settings.
Reset drum counter		Reset drum counter after replacing drum unit.

Prolonged Non-Use and Moving of the Printer

Prolonged Non-use

If you ever leave the printer unused for a long period of time, remove the power cord from the wall outlet.

We recommend you consult with your dealer about the additional actions you should take to avoid possible damage that may occur when the printer is used next time.

Moving the Printer

When you move the printer:

- Move it gently.
- Keep it as level as possible to avoid spilling toner inside the printer.
- Be sure to consult a service technician before attempting longdistance transportation of the printer.
- Keep the printer horizontal.

WARNING If you are shipping the printer, remove and pack the toner cartridge and drum unit in a plastic bag and ship them separately from the printer.

7 Troubleshooting

Solving Malfunctions

The table below provides general guidelines for problem solving.

If a problem occurs with your printer, look into the checkpoints and perform procedures indicated on the following pages. If the problem persists, contact your service technician.

Symptom	Checkpoints	Corrective Actions	Reference Page
The printer will not print from the computer.	Check the power cord.	Connect both ends of the power cord securely.	3-1
	Is the printer powered on?	Turn on [**Main Power**] (⏻).	—
	Are the interface cable connected?	Connect the correct interface cable securely.	3-1
	Was the printer powered on before the interface cable was connected?	Power on the printer after connecting the interface cable.	3-1
	Is the print job paused?	Resume printing.	—
	Check that the indicators display in a recognized combination.	Using the information on page *7-6*, check if an error has occurred and clear the error. If the indicators show a pattern not described in the table on page *7-6*, turn [**Main Power**] (⏻) off and then on again. Print the job again.	7-6
	Check if a status page can be printed.	If the status page was printed successfully, there may be a problem with the connection to the computer. Refer to *Connections* on page *3-1* and check the connection. To print the status page, refer to *Operation Panel* on page *2-2*.	2-2 3-50
The indicators are off and the motor is not working.	Check the power cord.	Connect both ends of the power cord securely.	3-1
	—	Press [**Main Power**] (⏻).	—
The printer prints a status page but data from the computer is not being printed.	Check the interface cable.	Connect both ends of the interface cable securely. Try replacing the printer cable.	3-1
	Check program files and application software.	Try printing another file or using another print command. If the problem occurs with a specific file or application, check the printer settings for that application.	—

Symptom	Checkpoints	Corrective Actions	Reference Page
Vapor is emitted near the top tray.	Check if the temperature is low near the location of the printer, or if the paper that is being used has been exposed to humidity.	Depending on the operating environment of the printer and the condition of the paper, heat generated during printing can evaporate water moisture in the printed paper, emitting vapor from the printer. In this case, printing can be continued without any problem. To correct this, increase the temperature in the room, and use paper that has been stored in a dry place.	—
Printing speed has slowed down.	Did you unplug the power cord?	It will return to normal printing speed in about 15 minutes.	—
Paper often jams.	Is the paper loaded correctly?	Load the paper correctly.	3-8, 3-9
	Is the paper of the supported type? Is it in good condition?	Remove the paper, turn it over, and reload it.	3-3
	Is the paper curled, folded or wrinkled?	Replace the paper with new paper.	3-3
	Are there any loose scraps or jammed paper in the printer?	Remove any jammed paper.	7-9
	—	Clean the Paper feed roller.	7-16
2 or more sheets are overlaps when ejected. (multi feed) 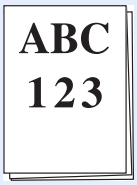	—	Load the paper correctly.	3-8
Printouts are wrinkled. 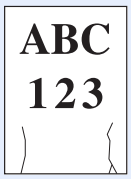	Is the paper damp?	Replace the paper with new paper.	3-3
Printouts are curled.	Is the paper damp?	Replace the paper with new paper.	3-3
Text is missing on the Windows test page.	—	This is a problem specific to the Windows OS. It is not a printer problem. It does not affect print quality.	—

Symptom	Checkpoints	Corrective Actions	Reference Page
Printouts have dropouts or stray dots. 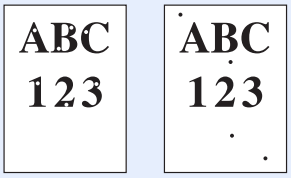	—	Clean the drum unit.	6-11
		Select the **Configuration** > **Device Defaults** > **Media type** and set it to **Custom7**. If there is still no improvement, Decrease the adjustment value for Print density in KYOCERA Client Tool. If there is still no improvement, return the setting to the original value.	3-44
Printouts have vertical streaks.	—	The drum unit may be damaged. If the problem is not solved even after printing several pages, call for service.	—
Faint or blurred printing. 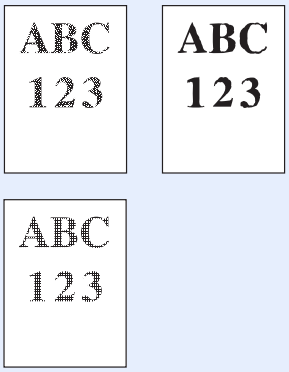	Check the toner cartridge.	If necessary, replace the toner cartridge.	6-1
	Check the **Print density** setting in KYOCERA Client Tool.	Increase the adjustment value for the **Print density** in the KYOCERA Client Tool. For more information, refer to *KYOCERA Client Tool User Guide*.	—
White streaks appears	Check the toner cartridge.	If necessary, replace the toner cartridge.	6-1
Gray background.	Check the toner cartridge.	If necessary, replace the toner cartridge.	6-1
	Check the **Print density** setting in KYOCERA Client Tool.	Decrease the adjustment value for the **Print density** in the KYOCERA Client Tool. For more information, refer to *KYOCERA Client Tool User Guide*.	—
Dirt on the top edge or back of the paper. 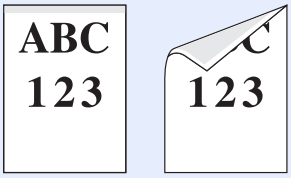	Is the interior of the printer dirty?	If the problem is not solved even after printing several pages, clean the registration roller, conveying unit and paper feed unit. If the problem is not solved after cleaning, call for service.	6-7

Symptom	Checkpoints	Corrective Actions	Reference Page
Printing incomplete or out of position.	Is the paper loaded correctly?	Check the position of the paper width guides.	3-9
	Are the application software settings at the PC set properly?	Check that the printing settings are correct in the application software and the printer driver.	—
The previous image remains and lightly printed. In minor cases, residual image appears as black dots. 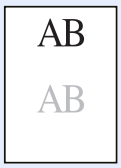	—	Select the **Configuration** > **Device Defaults** > **Media type** and set it to **Custom7**. If there is still no improvement, Decrease the adjustment value for Print density in KYOCERA Client Tool. If there is still no improvement, return the setting to the original value.	3-44
The altitude is 1,500 m or higher and irregular white dots appear in the image. 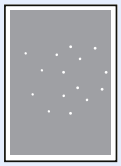	—	Select **Maintenance Menu** > **Adjust print quality** > **Altitude setting** and increase the adjustment value. If there is no improvement after the value is increased by 1 level, increase by 1 level again. If there is still no improvement, return the setting to the original value.	6-14
Change the connect setting for the Wireless Network to the connect setting for the USB.		Connect the machine and PC with the USB cable and install the driver and the utility again.	3-12 3-20

Tips

Printer problems may be solved easily by following the tips below. When you have encountered a problem that cannot be solved following the guidelines above, try the following:

- Restart the computer you are using to send print jobs to the printer.
- Obtain and use the latest version of the printer driver. The latest versions of printer drivers and utilities are available at: hpps://www.kyocera.info/
- Make sure that the procedures for printing are correctly followed in the application software. Consult the documentation supplied with the application software.

Checking Troubleshooting on Website

Corrective actions for the currently occurring error can be checked by opening a troubleshooting page on our website.

Checking from a PC

1 Start KYOCERA Client Tool according to the description in *Accessing KYOCERA Client Tool* on page *3-35*.

2 Click the **Troubleshooting** icon in the **Maintenance** tab.

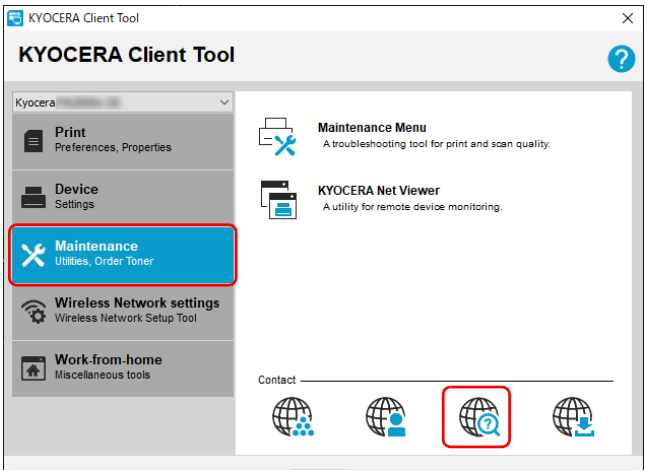

Checking from a mobile device

Scan a QR code on the label attached to the machine.

Indicator pattern when an error occurs

When a problem occurs on the machine, the indicator on the operation panel lights in a specific pattern. Problems that can be resolved by the user are described below. If the problem persists, contact your Service Representative.

Indicator	Description	Reference Page
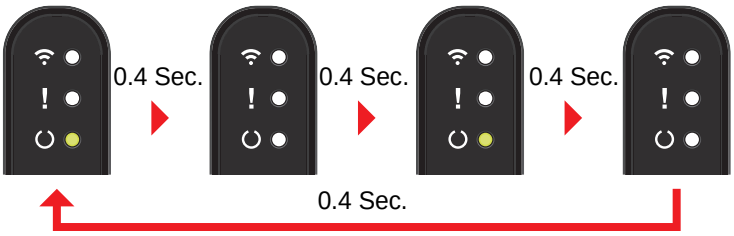	• Offline state	4-7
	• Close top cover • Replace toner • Missing Toner cartridge • Missing drum unit	6-1 6-4
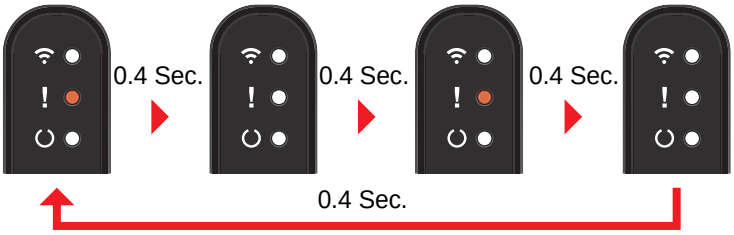	• Paper jam	7-9
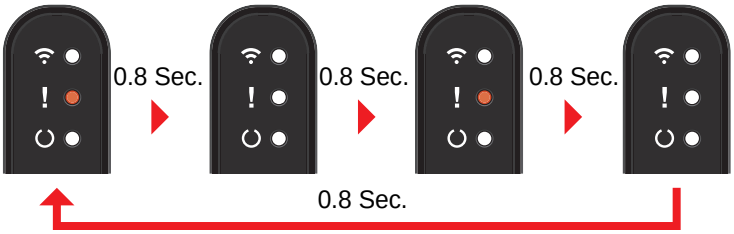	• Add paper • Load Cassette • Set paper • Toner low • Paper source not supported * * In case an error occurs, pressing [**Main Power**] (⏻) once ignores the error and continues printing. Remedy: Change the Paper Source of the printer driver.	3-3 6-2 -
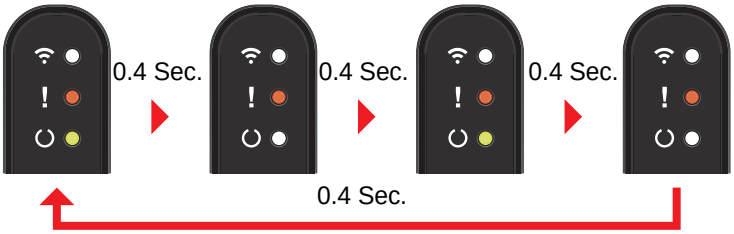	This error indicates the following error. • KPDL error • Memory overflow • Print overrun • RAM disk error • File not found • Top Tray Full In case an error occurs, pressing [**Main Power**] (⏻) once ignores the error and continues printing.	-

Indicator	Description	Reference Page
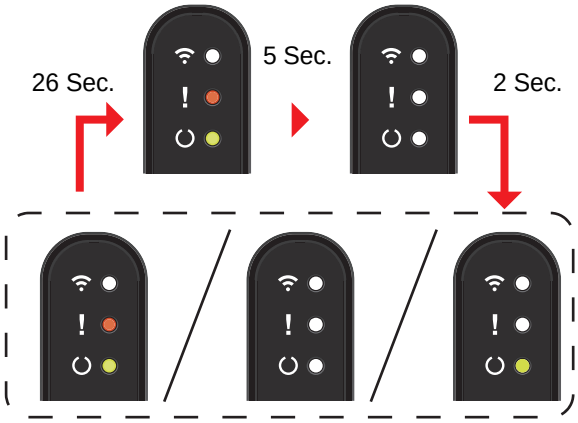	• Call service	-
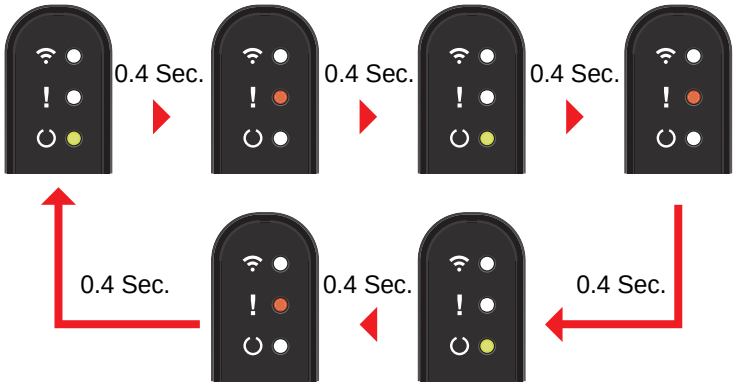	Flashes every 5 seconds, 10 seconds, and 15 seconds after [**Main Power**] (⏻) is pressed.	-

Note KYOCERA Client Tool (software bundled with the GX Driver) will provide more detailed information about the printer status. (Refer to *Machine Settings* on page *3-35*.)

Error Messages

If a problem has occurred in the printer, the indicators on the operation panel, the KYOCERA Client Tool, and the Status Monitor will show the status of the printer. Problems that can be resolved by the user are described below.

Indicators

If the **Attention** indicator is lit or flashing, check the KYOCERA Client Tool.

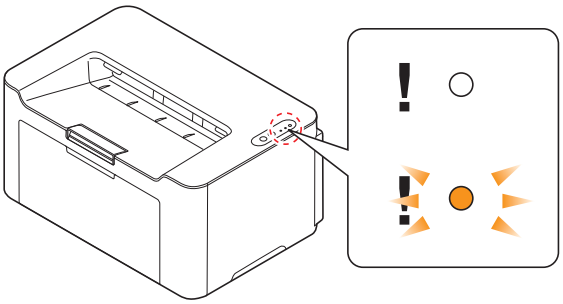

Note If the indicators light or flash repeatedly in manners not described above, a service error has probably occurred. Switch off the printer [**Main Power**] (), unplug the power cord, and then plug the power cord back in and switch on [**Main Power**] (). This may clear the error. If the error is not cleared, contact your service technician.

Message Displayed in KYOCERA Client Tool and Status Monitor*	Meaning	Remedy
Add paper	There is no paper in the paper source.	Load paper into the paper source.
	The paper size in the paper source is different from the printer driver setting.	Load the proper size of paper in the paper source.
Add toner	The toner has run out.	Replace with a new toner cartridge.
Cover open	The top cover is open.	Close the top cover.
Error has occurred	There is a condensation inside the machine.	Please wait for about an hour and then, turn the power off and on. Refer to *Power On/Off* on page *3-2*.
	This message is displayed if the installed toner cartridge's regional specification does not match the machine's.	Install the specified toner cartridge.
Memory overflow	Unable to continue the job as the memory is used up.	Change the print resolution from Fast 1200 to 600 dpi. Refer to *Printer Driver User Guide*.
Paper jam	A paper jam has occurred.	Refer to *Clearing Paper Jams* on page *7-9* and remove the jammed paper.
Toner is running out.	The toner is running out.	Have a new toner cartridge ready.
Top tray full	The top tray is full of paper.	The printer pauses after 50 sheets are printed. Remove paper from the top tray and press [**Main Power**] () to begin printing.

* Events for which the Status Monitor provides notification can be set in the Configuration. Refer to *Configuration* on page *3-42*.

Clearing Paper Jams

If paper jams in the paper transport system, or no paper sheets are fed at all, the machine automatically goes offline, and the **Attention** indicator will flash. KYOCERA Client Tool can indicate the location of the paper jam (the component where the paper jam has occurred). Remove the paper jam. After removing the paper jam, the machine will resume printing.

Possible Paper Jam Locations

Detailed paper jam positions are as follows. Refer to the indicated page number to remove the paper jam.

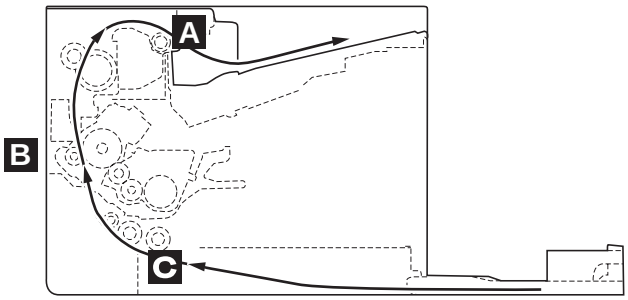

Paper jam location	Description	Reference page
A	A paper jam has occurred in paper output area.	*Page 7-10*
B	A paper jam has occurred inside the machine.	*Page 7-11*
C	A paper jam has occurred in the cassette.	*Page 7-14, 7-15*

General Considerations for Clearing Jams

Bear in mind the following considerations when attempting paper jam removal:

CAUTION When removing a paper jam, pull the paper gently so as not to tear it. Torn pieces of paper are difficult to remove and may be easily overlooked, deterring the paper jam recovery.

- If paper jams occur frequently, try using a different type of paper, replace the paper with paper from another ream, or flip the paper stack over. The machine may have problems if paper jams recur after the paper is replaced.
- Whether or not the jammed pages are reproduced normally after printing is resumed, depends on the location of the paper jam.

Paper output area

1 Open the top cover.

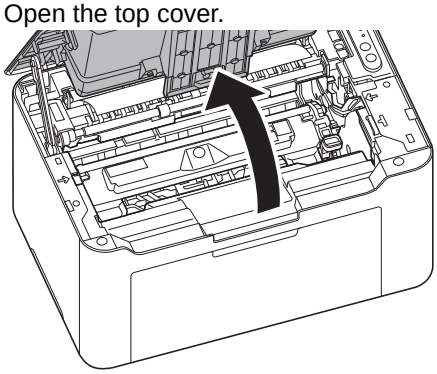

2 Open the paper stopper shown in the figure.

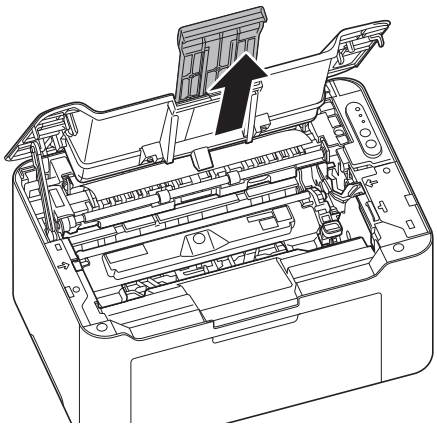

3 Remove any partially fed paper.

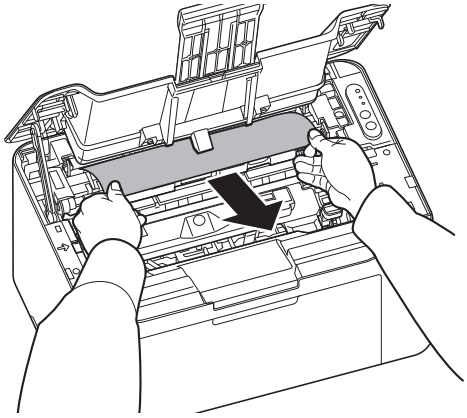

4 Return the paper stopper to its position, and then press the center of the top cover to close.
The machine warms up and resumes printing.

Inside the Machine

Note Place the removed toner cartridge and drum unit on a sheet of paper to prevent staining other items.

1 Open the top cover.

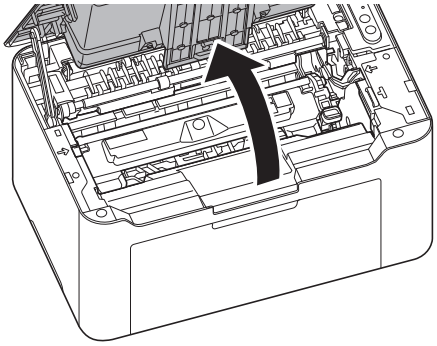

2 Push the toner cartridge lock button and then, lift the toner cartridge out of the machine.

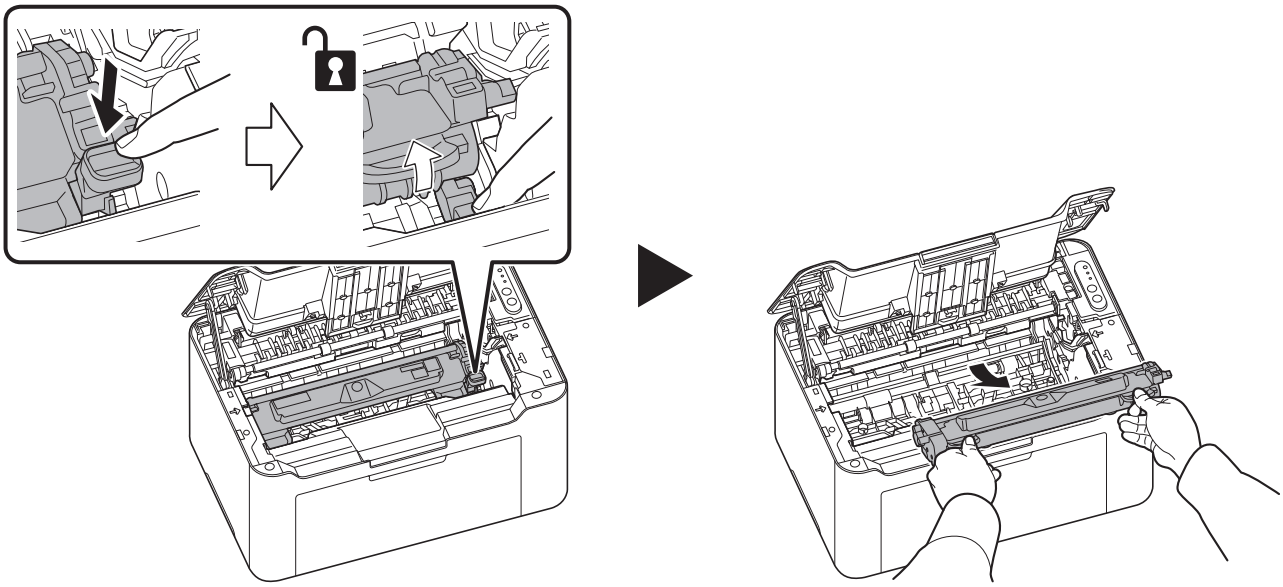

3 Pull up the drum unit lever, and remove the drum unit.

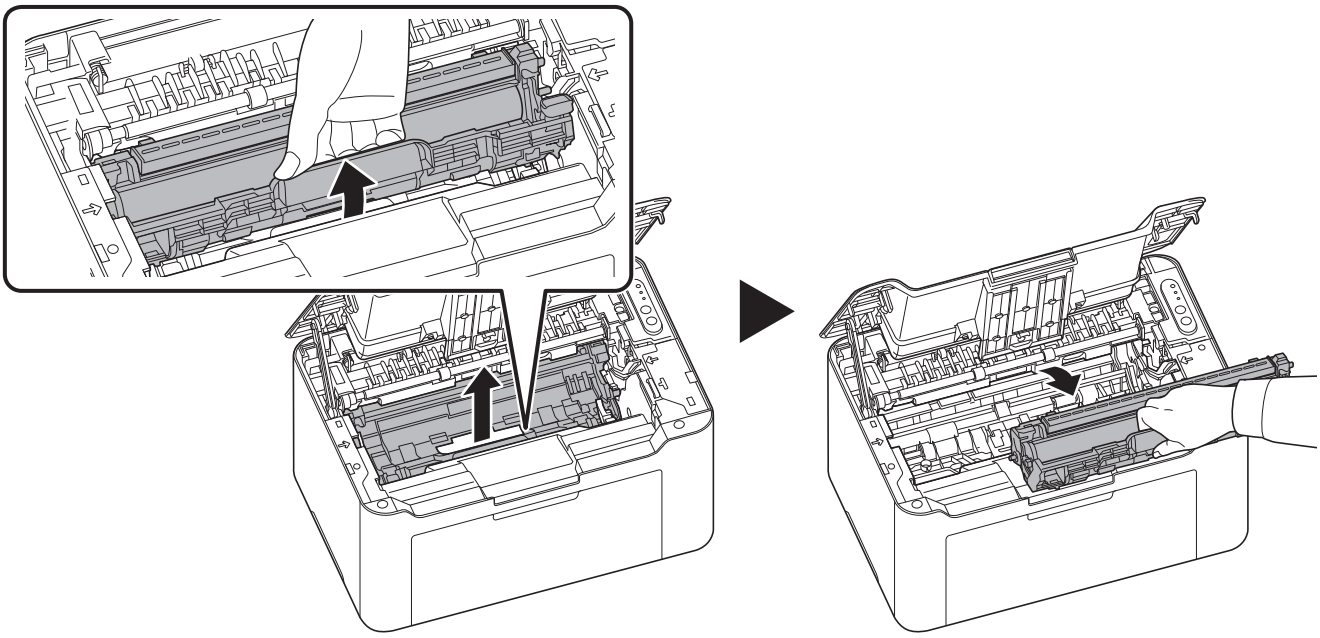

CAUTION The fuser unit inside the machine is hot. Do not touch it, as it may result in burn injury.

Note The drum is sensitive to light. Never expose the drum unit to light for more than five minutes.

4 If the jammed paper appears to be pinched by rollers, pull it along the normal running direction of the paper.

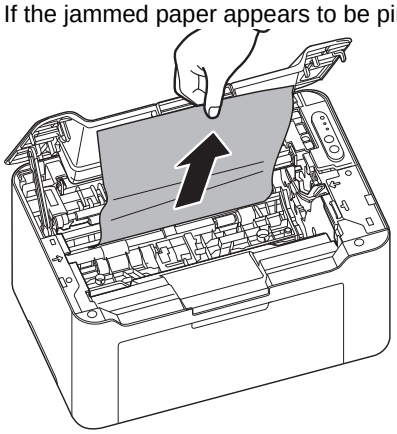

5 Return the removed drum unit to its position, aligning the guides at both ends with the slots in the machine. After that, press down the drum unit lever until they click.

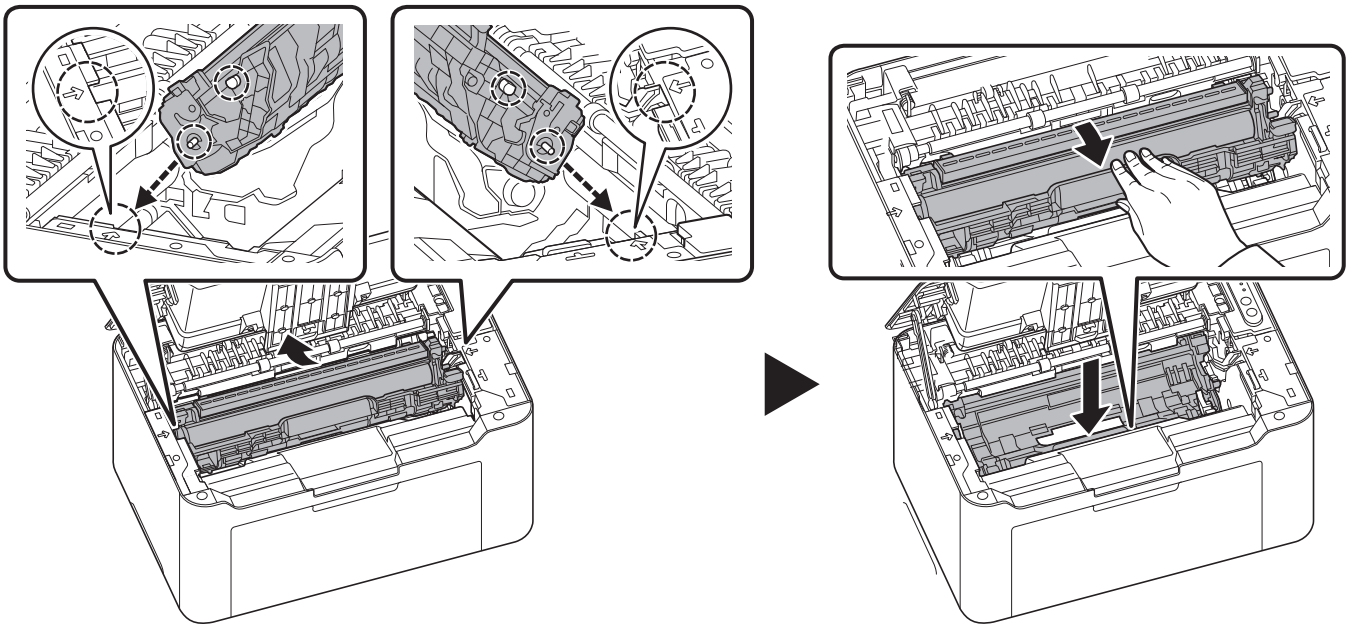

6 Set the toner cartridge to its position, aligning the guides at both ends with the slots in the machine. After that, press the levers on both ends of the toner cartridge until they click.

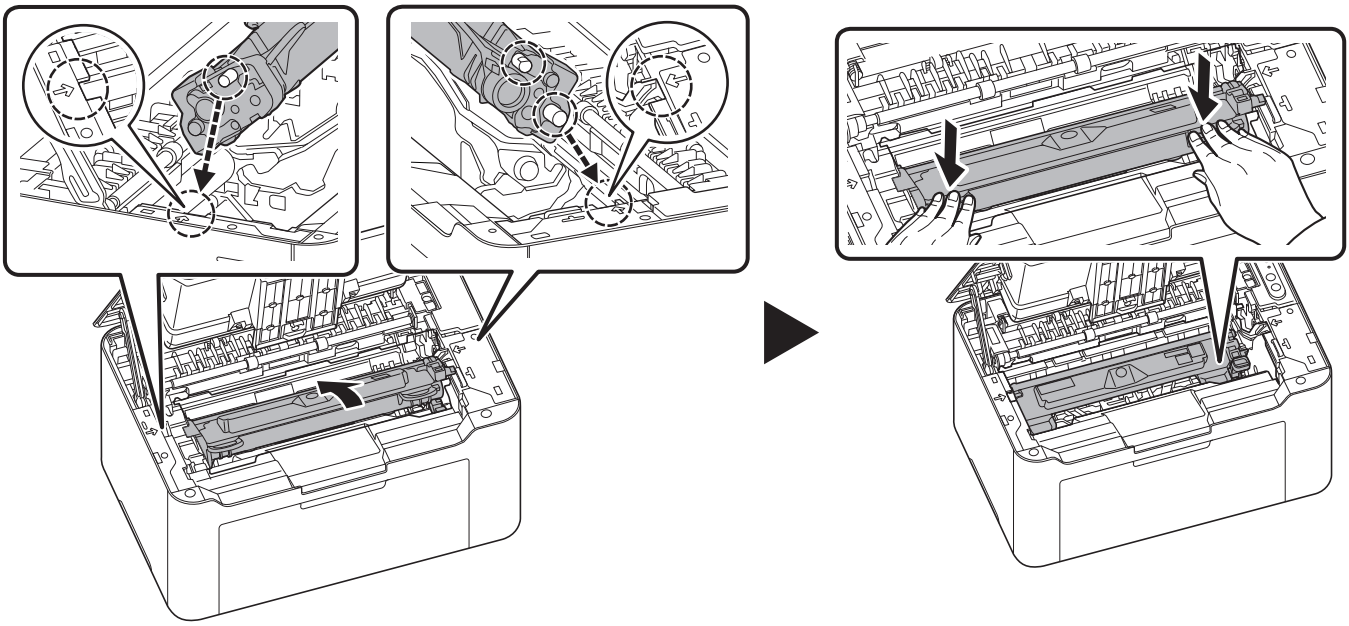

7 Press the center of the top cover to close.
The machine warms up and resumes printing.

Note If you hear a noise after closing the top cover, remove drum unit and toner cartridge and set them again.

Cassette

Follow the steps below to clear paper jams in the cassette.

IMPORTANT Do not try to remove paper that has already been partially fed. Refer to *Inside the Machine* on page *7-11*.

1 Remove any partially fed paper.

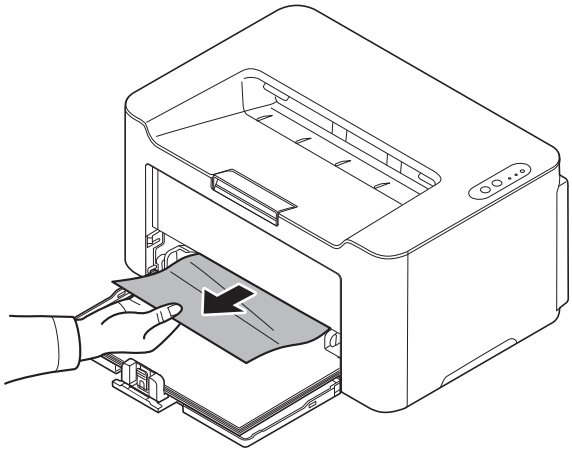

2 Check to see if paper is loaded correctly. If not, reload the paper.

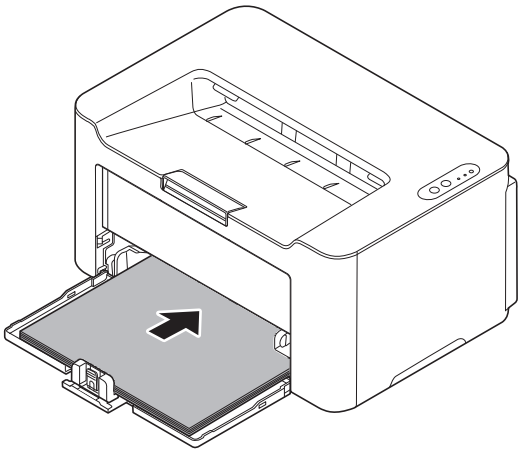

3 Press [**Main Power**] (⏻) to clear the error and the printer warms up and resumes printing.

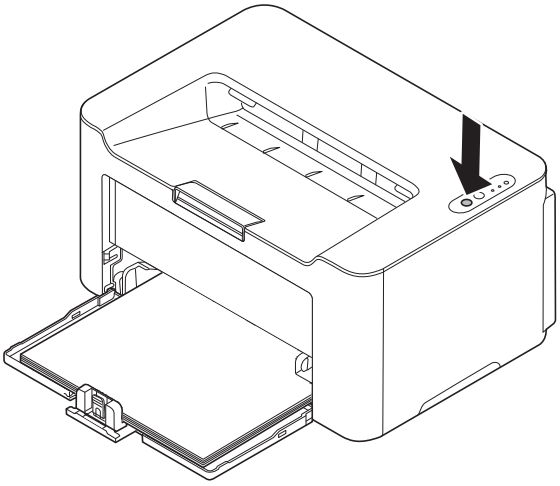

If paper feed failure occurs

Check on and reduction of number of paper sheets loaded

If an excessive amount of thick paper is loaded in the cassette, it may not be fed. In that case, reduce the number of sheets to be loaded.

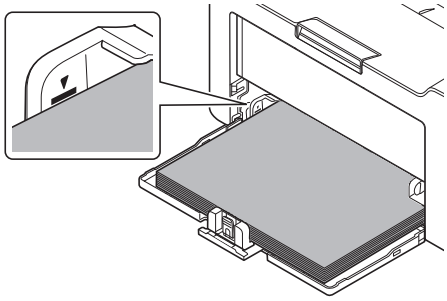

Edge fanning and curl straightening

Remove all the even pages (including the instruction sheet) from the output tray, fan through the sheets to separate them prior to loading.

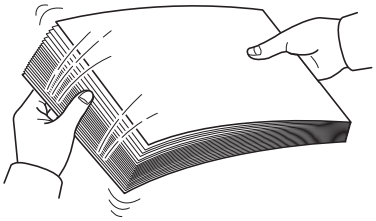

If the paper is curled at an edge, straighten it prior to reloading.

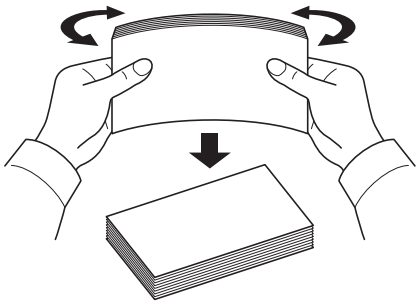

No paper feed due to wavy paper edge

When the paper feed fails because the edge of the paper is wavy, turn it upside down and load it again.

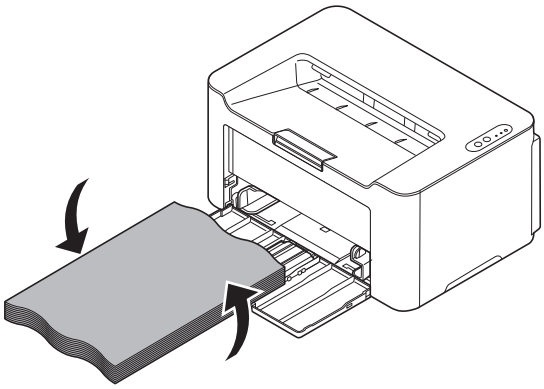

Cleaning the Paper feed roller

If a paper often jams, clean the paper feed roller.

Note Place the removed toner cartridge and drum unit on a sheet of paper to prevent staining other items.

1 Open the top cover.

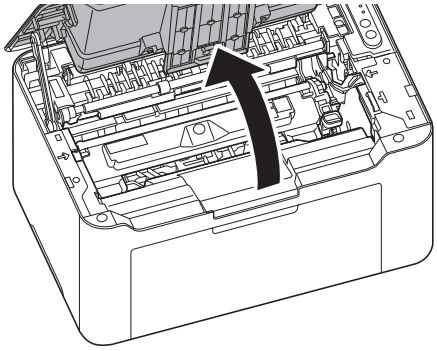

2 Push the toner cartridge lock button and then, lift the toner cartridge out of the machine.

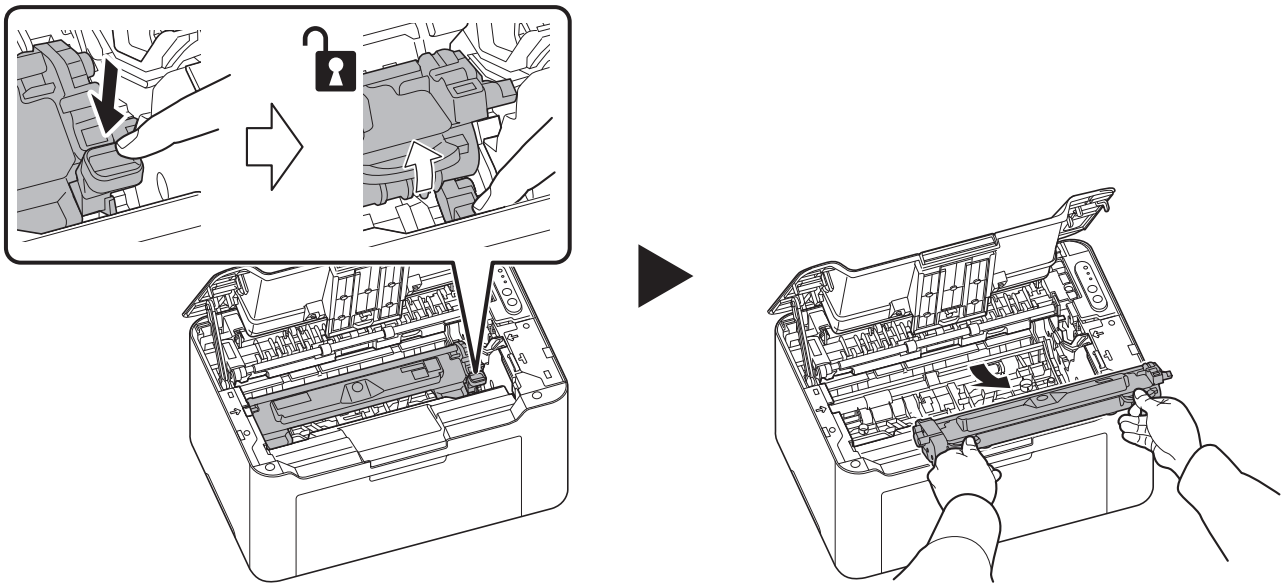

3 Pull up the drum unit lever, and remove the drum unit.

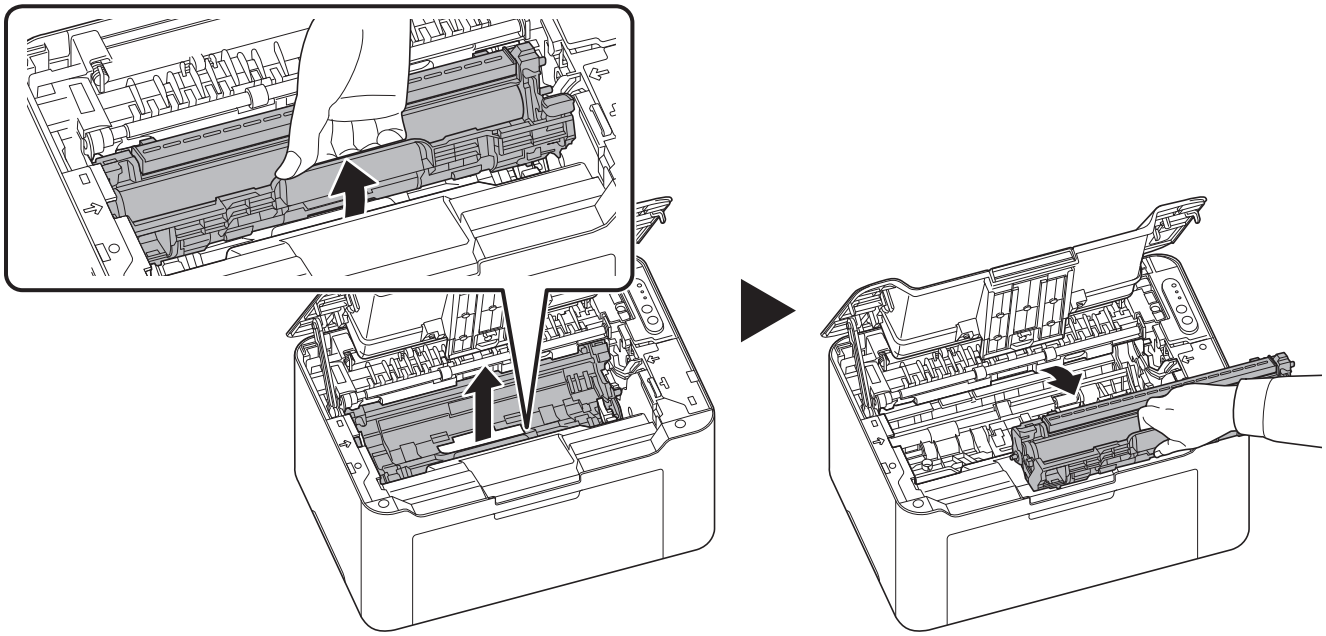

Note The drum unit is sensitive to light. Never expose the drum unit to light for more than five minutes.

4 Push up the release lever, and then move the paper feed roller to the right.

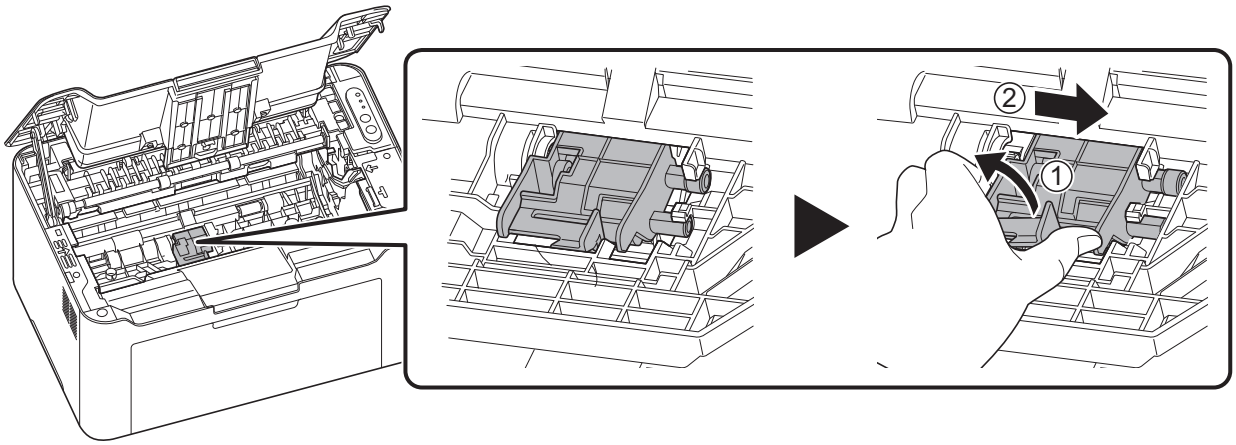

5 Remove the paper feed roller.

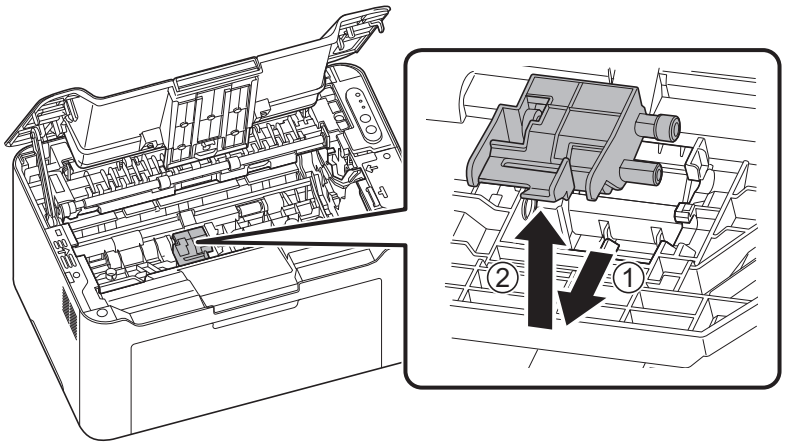

6 Use a clean, lint free cloth to clean dust and dirt away from the paper feed roller.

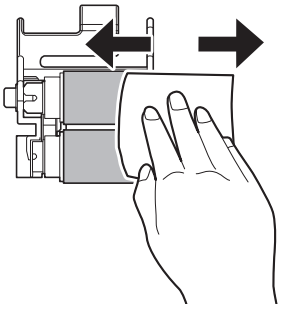

7 Attach the removed paper feed roller, and move it to the left until it clicks.

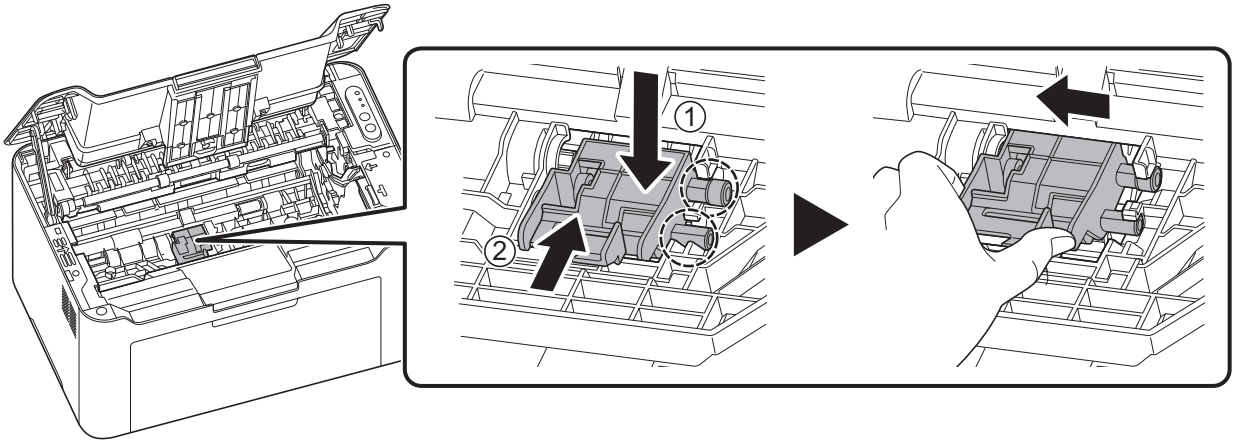

Note If you can't set the paper feed roller well, turn the shaft shown below with your finger to engage the coupling.

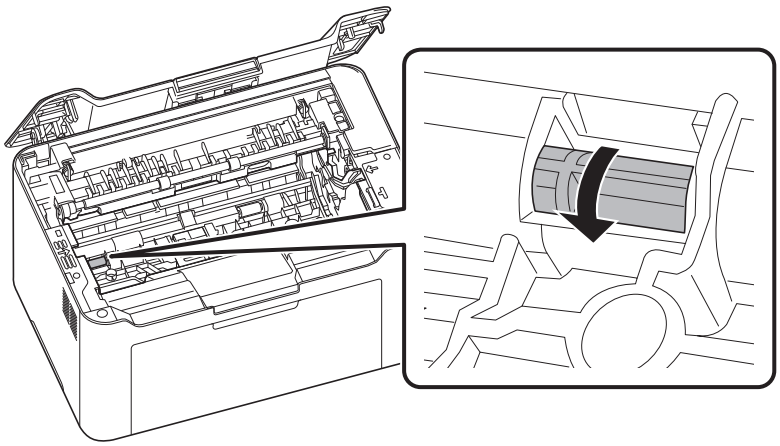

8 Open the charger cover.After cleaning, return the removed drum unit to its position, aligning the guides at both ends with the slots in the machine. After that, press down the drum unit lever until they click.

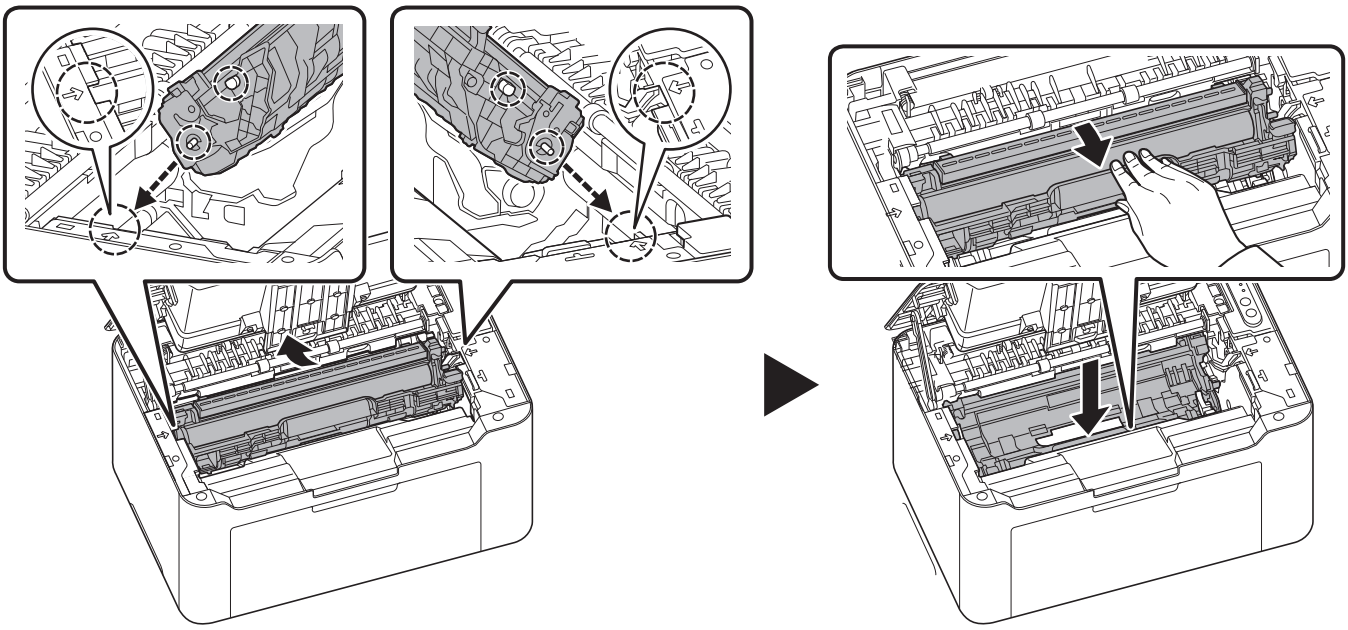

9 Set the toner cartridge to its position, aligning the guides at both ends with the slots in the machine. After that, press the levers on both ends of the toner cartridge until they click.

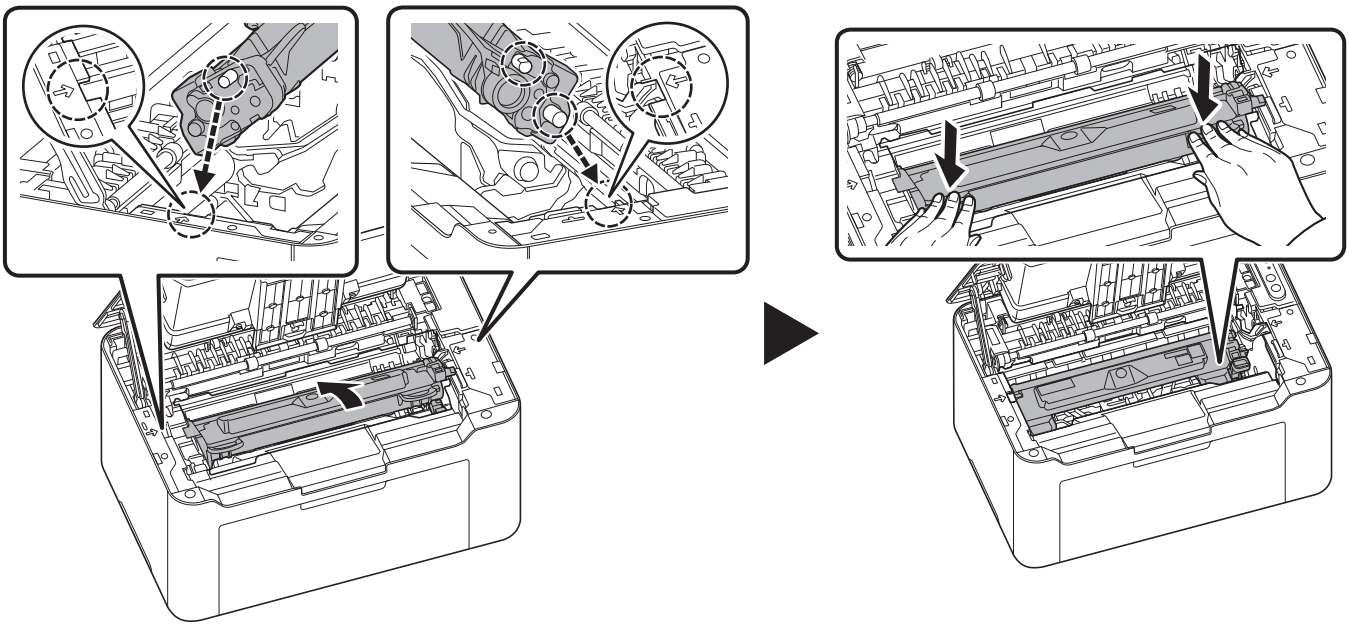

10 Press the center of the top cover to close.

Note If you hear a noise after closing the top cover, remove drum unit, toner cartridge and paper feed roller and set them again.

8 Appendix

Specifications

Note These specifications are subject to change without notice.

Item		Description
Type		Desktop
Printing Method		Electrophotography by semiconductor laser
Paper Weight		65 to 105 g/m²
Paper Type		Plain, Preprinted, Bond, Recycled, Rough, Letterhead, Color, Prepunched, High Quality, Custom 1 to 8
Paper Size		A4, A5 (Landscape), A5, Folio, JIS B5, ISO B5, Letter, Legal, Envelope C5, Executive, Envelope C5, Oficio II (8.5 × 13 inches), 216 × 340 mm, Mexican, 16 K, Custom (148 × 148 to 216 × 356 mm, 5.83 × 5.83 to 8.5 × 14 inches)
Magnification ratio		25 to 400%, 1% increments
Printing Speed (images/min)*		A4: 20 images/min Letter: 21 images/min Legal: 17 images/min B5: 12 images/min A5: 13 images/min A5 (Landscape): 30 images/min 16K: 21 images/min
First Print Time (A4, feed from cassette)		8 seconds or less
Warm-up Time (23°C/73.4°F, 60%RH)	Power on	20 seconds or less
	Sleep	18 seconds or less
Paper Capacity		150 sheets (80 g/m²)

* In case of using the EcoPrint function, the printing speed will be slower.
Printing speed may decrease depending on the installation environment.

Item		Description
Top Tray Capacity		50 sheets (80 g/m²) (The printer pauses after 50 sheets are printed.)
Continuous printing		1 to 999 sheets
Resolution		600 dpi/Fast 1200 dpi
Operating Environment	Temperature	10 to 32.5°C/50 to 90.5°F
	Humidity	10 to 80%
	Altitude	3,500 m/11,482.8 ft maximum
	Brightness	1,500 lux maximum
Controller		FA616TE_MMU 450 MHz
Supported OS		Windows 8.1, Windows 10, Windows 11, Windows Server2012/R2, Windows Server2016, Windows Server2019, Windows Server2022, Mac OS X 10.5 or higher
Interface		USB Interface Connector: 1 (USB Hi-Speed) Wireless LAN: 1 (PA2001w/PA2000w only)
Memory		PA2001w/PA2000w: 32MB PA2001/PA2000: 16MB
Dimension (W × D × H)		350 × 233 × 177 mm 13.78" × 9.18" × 6.97"
Weight (with toner cartridge)		4.5 kg/9.92 lb
Space Required (W × D)		350 × 366.9 mm 13.78" × 14.45"
Power Requirements		120 V Specification Model: 120 V ～ 60 Hz 5.6 A 230 V Specification Model: 220 to 240 V ～ 50/60 Hz 3.1 A
The power consumption of the product in networked standby (If all network ports are connected.)		The information is available at the website below. https://www.kyoceradocumentsolutions.eu/en/about-us/our-brand/environmental-policy.html

* In case of using the EcoPrint function, the printing speed will be slower.

Printing speed may decrease depending on the installation environment.

QUALITY CERTIFICATE

This machine has passed all quality controls and final inspection.

KYOCERA Document Solutions America, Inc.
Headquarters
225 Sand Road, Fairfield, New Jersey 07004-0008, U.S.A.
Phone: +1-973-808-8444
Fax: +1-973-882-6000

Latin America
8240 NW 52nd Terrace, Suite 301
Miami, Florida 33166, U.S.A.
Phone: +1-305-421-6640

KYOCERA Document Solutions
Canada, Ltd.
6120 Kestrel Rd., Mississauga, ON L5T 1S8, Canada
Phone: +1-905-670-4425
Fax: +1-905-670-8116

KYOCERA Document Solutions
Mexico, S.A. de C.V.
Calle Arquimedes No. 130, 4 Piso, Colonia Polanco Chapultepec, Delegacion Miguel Hidalgo, Ciudad de Mexico, C.P.11560, Mexico
Phone: +52-555-383-2741
Fax: +52-555-383-7804

KYOCERA Document Solutions
Brazil, Ltda.
Alameda África, 545, Pólo Empresarial Consbrás, Tamboré, Santana de Parnaíba-SP, CEP 06543-306, Brazil
Phone: +55-11-2424-5353
Fax: +55-11-2424-5304

KYOCERA Document Solutions
Chile SpA
Jose Ananias 505, Macul. Santiago, Chile
Phone: +56-2-2670-1900
Fax: +56-2-2350-7150

KYOCERA Document Solutions
Australia Pty. Ltd.
Level 3, 6-10 Talavera Road North Ryde NSW, 2113, Australia
Phone: +61-2-9888-9999
Fax: +61-2-9888-9588

KYOCERA Document Solutions
New Zealand Ltd.
Ground Floor. 19 Byron Avenue, Takapuna, Auckland, New Zealand
Phone: +64-9-415-4517
Fax: +64-9-415-4597

KYOCERA Document Solutions Asia Limited
13/F., Mita Centre, 552-566, Castle Peak Road, Tsuenwan, NT, Hong Kong
Phone: +852-2496-5678
Fax: +852-2610-2063

KYOCERA Document Solutions
(China) Corporation
8F, No. 288 Nanjing Road West, Huangpu District, Shanghai, 200003,China
Phone: +86-21-5301-1777
Fax: +86-21-5302-8300

KYOCERA Document Solutions
(Thailand) Corp., Ltd.
335 Ratchadapisek Road, Wongsawang, Bangsue, Bangkok 10800, Thailand
Phone: +66-2-586-0333
Fax: +66-2-586-0278

KYOCERA Document Solutions
Singapore Pte. Ltd.
12 Tai Seng Street #04-01A,Luxasia Building Singapore 534118
Phone: +65-6741-8733
Fax: +65-6748-3788

KYOCERA Document Solutions
Hong Kong Limited
16/F.,Mita Centre, 552-566, Castle Peak Road, Tsuen Wan, NT, Hong Kong
Phone: +852-3582-4000
Fax: +852-3185-1399

KYOCERA Document Solutions
Taiwan Corporation
6F., No.37, Sec. 3, Minquan E. Rd., Zhongshan Dist., Taipei 104, Taiwan
Phone: +886-2-2507-6709
Fax: +886-2-2507-8432

KYOCERA Document Solutions
Korea Co., Ltd.
#10F Daewoo Foundation Bldg 18, Toegye-ro, Jung-gu, Seoul, Korea
Phone: +822-6933-4050
Fax: +822-747-0084

KYOCERA Document Solutions
India Private Limited
First Floor, Block - A, First India Place, Sushant Lok Phase - 1, M. G. Road, Gurugram - 122002 (Haryana), India
Phone: +91-124-4671000
Fax: +91-124-4671001

KYOCERA Document Solutions
Malaysia Sdn. Bhd.
G/F & 2/F, No.71, Jalan SS15/5A, 47500 Subang Jaya, Selangor Darul Ehsan, Malaysia
Phone: +603-5634 5609

KYOCERA Document Solutions Europe B.V.
Bloemlaan 4, 2132 NP Hoofddorp, The Netherlands
Phone: +31(0)20-654-0000
Fax: +31(0)20-653-1256

KYOCERA Document Solutions Nederland B.V.
Beechavenue 25, 1119 RA Schiphol-Rijk, The Netherlands
Phone: +31-20-5877200
Fax: +31-20-5877260

KYOCERA Document Solutions (U.K.) Limited
Eldon Court 75-77 London Road, Reading, Berkshire RG1 5BS, United Kingdom
Phone: +44-118-931-1500
Fax: +44-118-931-1108

KYOCERA Document Solutions Italia S.p.A.
Via Monfalcone 15, 20132, Milano, Italy
Phone: +39-02-921791
Fax: +39-02-92179-600

KYOCERA Document Solutions Belgium N.V.
Sint-Martinusweg 199-201 1930 Zaventem, Belgium
Phone: +32-2-7209270
Fax: +32-2-7208748

KYOCERA Document Solutions France S.A.S.
Espace Technologique de St Aubin Route de l'Orme
91195 Gif-sur-Yvette CEDEX, France
Phone: +33-1-69852600
Fax: +33-1-69853409

KYOCERA Document Solutions Espana, S.A.
Edificio Kyocera, Avda. de Manacor No.2, 28290 Las Matas (Madrid), Spain
Phone: +34-91-6318392
Fax: +34-91-6318219

KYOCERA Document Solutions Finland Oy
Atomitie 5C, 00370 Helsinki, Finland
Phone: +358-9-47805200
Fax: +358-9-47805212

KYOCERA Document Solutions Europe B.V. Amsterdam (NL) Zürich Branch
Hohlstrasse 614, 8048 Zürich, Switzerland
Phone: +41-44-9084949
Fax: +41-44-9084950

KYOCERA Bilgitas Document Solutions Turkey A.S.
Altunizade Mah. Prof. Fahrettin Kerim Gökay Cad. No:45
34662 ÜSKÜDAR İSTANBUL TURKEY
Phone: +90-216-339-0020
Fax: +90-216-339-0070

KYOCERA Document Solutions Deutschland GmbH
Otto-Hahn-Strasse 12, 40670 Meerbusch, Germany
Phone: +49-2159-9180
Fax: +49-2159-918100

KYOCERA Document Solutions Austria GmbH
Wienerbergstraße 11, Turm A, 18. OG, 1100 Wien, Austria
Phone: +43-1-863380
Fax: +43-1-86338-400

KYOCERA Document Solutions Nordic AB
Borgarfjordsgatan 11, 164 40 Kista, Sweden
Phone: +46-8-546-550-00
Fax: +46-8-546-550-10

KYOCERA Document Solutions Norge Nuf
Olaf Helsetsv. 6, 0619 Oslo, Norway
Phone: +47-22-62-73-00
Fax: +47-22-62-72-00

KYOCERA Document Solutions Danmark A/S
Ejby Industrivej 60, DK-2600 Glostrup, Denmark
Phone: +45-70223880
Fax: +45-45765850

KYOCERA Document Solutions Portugal Lda.
Rua do Centro Cultural, 41 (Alvalade) 1700-106 Lisboa, Portugal
Phone: +351-21-843-6780
Fax: +351-21-849-3312

KYOCERA Document Solutions South Africa (Pty) Ltd.
KYOCERA House, Hertford Office Park, 90 Bekker Road (Cnr. Allandale), Midrand, South Africa
Phone: +27-11-540-2600
Fax: +27-11-466-3050

KYOCERA Document Solutions Russia LLC
Building 2, 51/4, Schepkina St., 129110, Moscow, Russia
Phone: +7(495)741-0004
Fax: +7(495)741-0018

KYOCERA Document Solutions Middle East
Dubai Internet City, Bldg. 17,
Office 157 P.O. Box 500817, Dubai, United Arab Emirates
Phone: +971-4-4330412

KYOCERA Document Solutions Czech, s.r.o.
Harfa Office Park, Českomoravská 2420/15, Praha 9
Czech Republic
Phone: +420-222-562-246

KYOCERA Document Solutions Inc.
1-2-28 Tamatsukuri Chuo-ku Osaka 540-8585 Japan
Phone: +81-6-6764-3555
https://www.kyoceradocumentsolutions.com

© 2021 KYOCERA Document Solutions Inc.
KYOCERA is a trademark of KYOCERA Corporation

2021.11
2YVKDEN004