S2722QC Outline Dimension
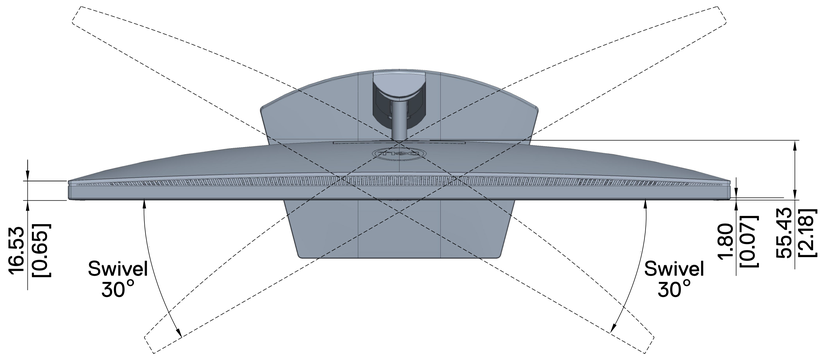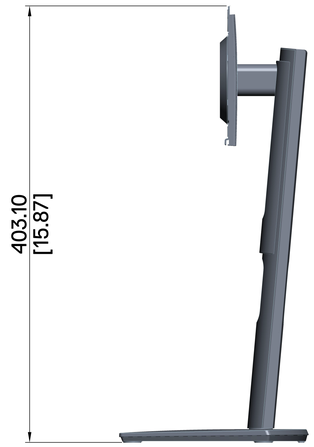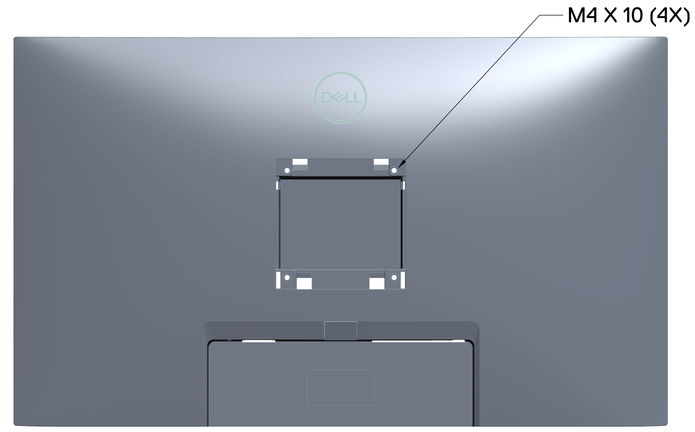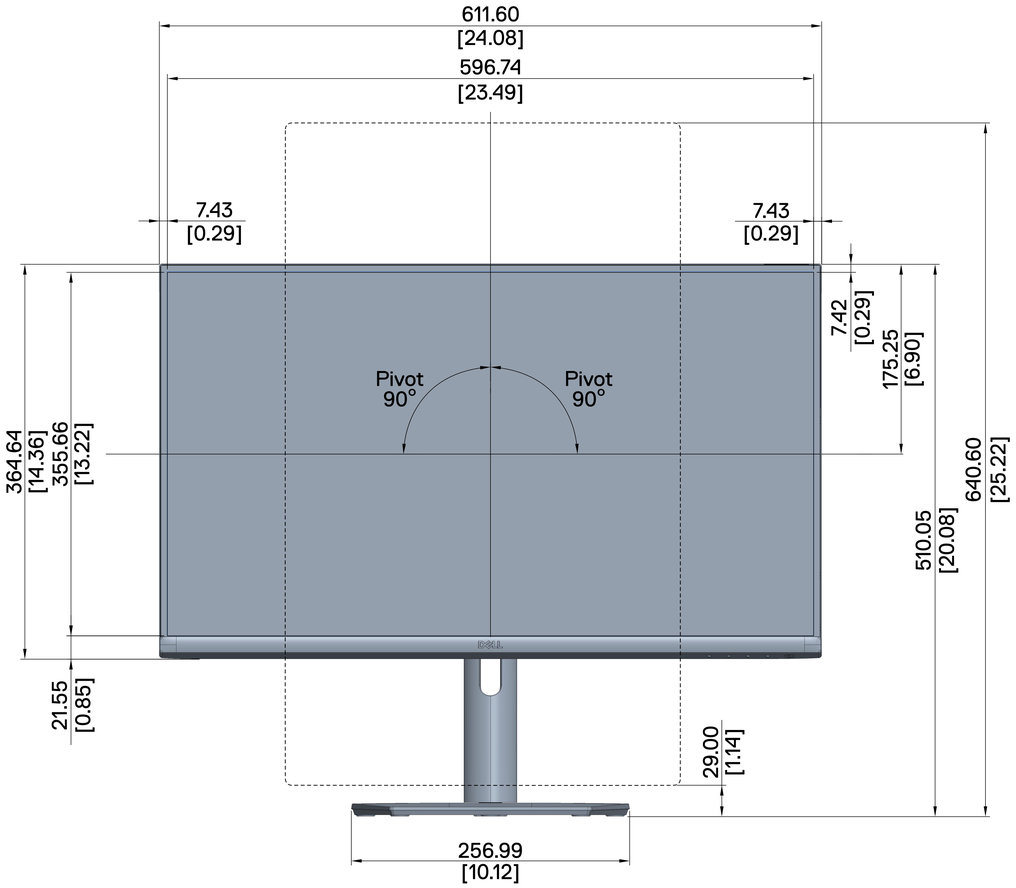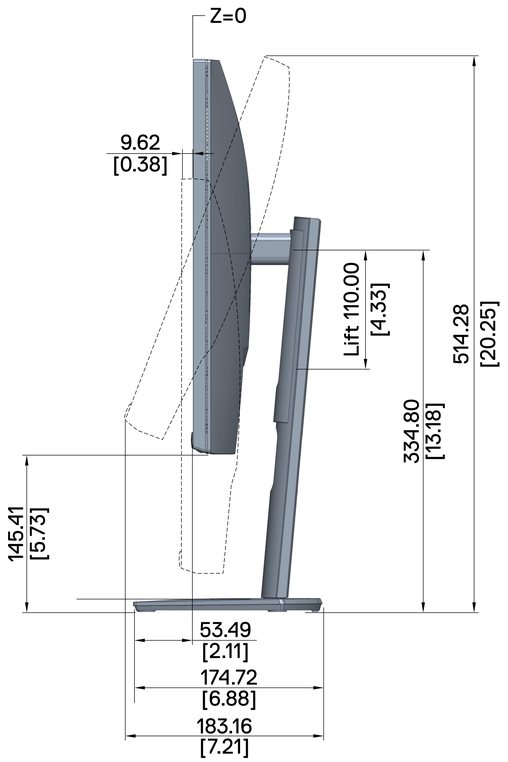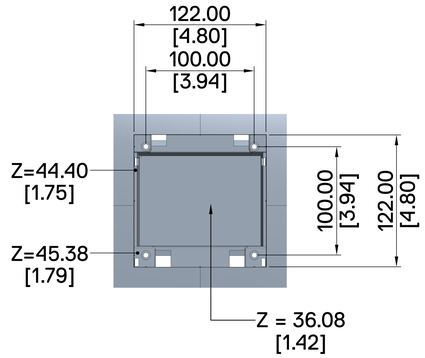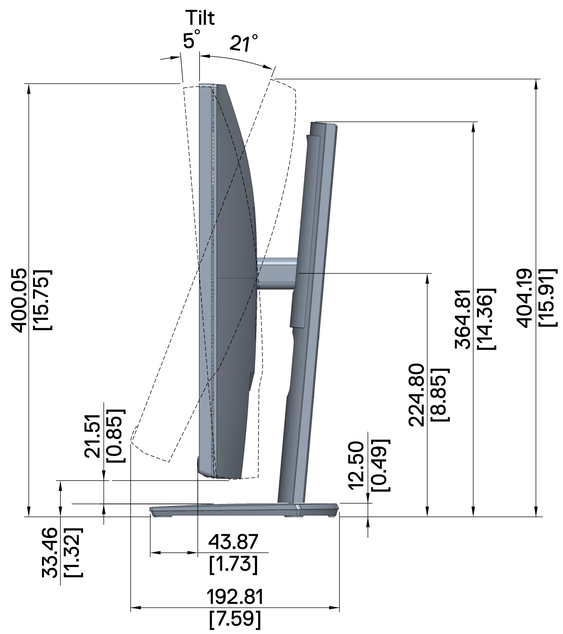
Unit : mm(inch)
Dimension: Nominal
Drawing : Not to scale