SILVERSTONE

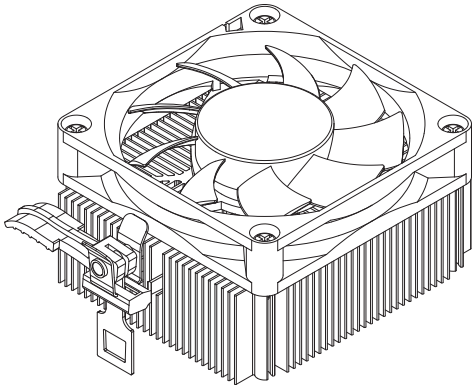

NT09-AM5

Low-Profile CPU Cooler Designed for AMD AM5 / AM4 sockets , featuring a dual ball bearing fan

User manual
www.silverstonetek.com

1

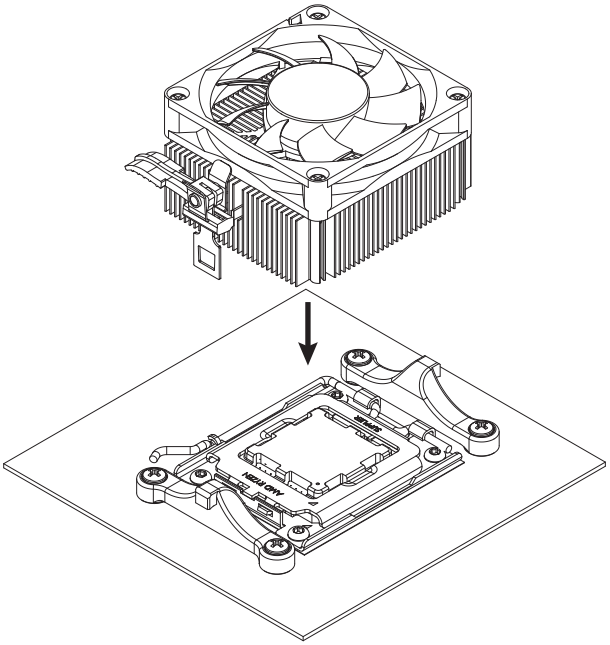

2

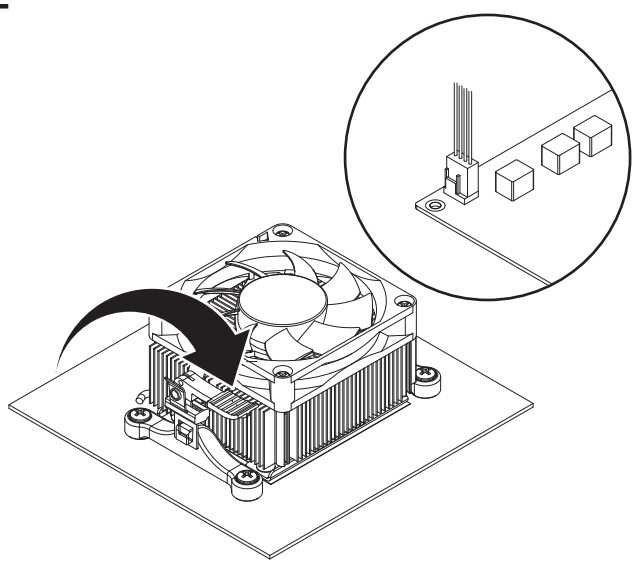

Warranty Information

This product has a limited 1 year warranty in North America and Australia.
For information on warranty periods in other regions, please contact your reseller or SilverStone authorized distributor.
本产品自购买之日起，于中国地区（不包含澳门，香港特别行政区）享有一年有限责任保固（部分产品为二年，三年或五年）。详细保固年限请参照官方网站 www.silverstonetek.com.cn 公布之产品型号为依据。

Warranty terms & conditions

1. Product component defects or damages resulted from defective production is covered under warranty. Defects or damages with the following conditions will be fixed or replaced under SilverStone Technology's jurisdiction.
   a) Usage in accordance with instructions provided in this manual, with no misuse, overuse, or other inappropriate actions.
   b) Damage not caused by natural disaster (thunder, fire, earthquake, flood, salt, wind, insect, animals, etc…)
   c) Product is not disassembled, modified, or fixed. Components not disassembled or replaced.
   d) Warranty mark/stickers are not removed or broken.
   Loss or damages resulted from conditions other than ones listed above are not covered under warranty.
2. Under warranty, SilverStone Technology's maximum liability is limited to the current market value for the product (depreciated value, excluding shipping, handling, and other fees). SilverStone Technology is not responsible for other damages or loss associated with the use of product.
3. Under warranty, SilverStone Technology is obligated to repair or replace its defective products. Under no circumstances will SilverStone Technology be liable for damages in connection with the sale, purchase, or use including but not limited to loss of data, loss of business, loss of profits, loss of use of the product or incidental or consequential damage whether or not foreseeable and whether or not based on breach of warranty, contract or negligence, even if SilverStone Technology has been advised of the possibility of such damages.
4. Warranty covers only the original purchaser through authorized SilverStone distributors and resellers and is not transferable to a second hand purchaser.
5. You must provide sales receipt or invoice with clear indication of purchase date to determine warranty eligibility.
6. If a problem develops during the warranty period, please contact your retailer/reseller/SilverStone authorized distributors or SilverStone **http://www.silverstonetek.com**.
   Please note that: (i) You must provide proof of original purchase of the product by a dated itemized receipt; (ii) You shall bear the cost of shipping (or otherwise transporting) the product to SilverStone authorized distributors. SilverStone authorized distributors will bear the cost of shipping (or otherwise transporting) the product back to you after completing the warranty service; (iii) Before you send the product, you must be issued a Return Merchandise Authorization ("RMA") number from SilverStone. Updated warranty information will be posted on SilverStone's official website.
   Please visit **http://www.silverstonetek.com** for the latest updates.

Additional info & contacts

For North America (usasupport@silverstonetek.com)
SilverStone Technology in North America may repair or replace defective product with refurbished product that is not new but has been functionally tested.
Replacement product will be warranted for remainder of the warranty period or thirty days, whichever is longer.
All products should be sent back to the place of purchase if it is within 30 days of purchase, after 30 days, customers need to initiate RMA procedure with SilverStone Technology in USA by first downloading the "USA RMA form for end-users" form from the below link and follow its instructions.
http://silverstonetek.com/contactus.php

For Australia only (support@silverstonetek.com)
Our goods come with guarantees that cannot be excluded under the Australian Consumer Law.
You are entitled to a replacement or refund for a major failure and for compensation for any other reasonably foreseeable loss or damage.
You are also entitled to have the goods repaired or replaced if the goods fail to be of acceptable quality and the failure does not amount to a major failure.
Please refer to above "Warranty terms & conditions" for further warranty details.

SilverStone Technology Co., Ltd. 12F No. 168 Jiankang Rd., Zhonghe Dist., New Taipei City 235 Taiwan R.O.C.
+ 886-2-8228-1238 (standard international call charges apply)

For Europe (support.eu@silverstonetek.de)
For China (support@silverstonetek.com.cn)
For all other regions (support@silverstonetek.com)

This device complies with Part 15 of the FCC Rules.
Operation is subject to the following two conditions:
(1) this device may not cause harmful interference, and
(2) this device must accept any interference received, including interference that may cause undesired operation.

有毒有害物质/元素及其化学含量表

部件名称	铅 (Pb)	汞 (Hg)	镉 (Cd)	六价铬 (Cr(VI))	多溴联苯 (PBB)	多溴二苯醚 (PBDE)
电机组件	x	0	0	0	0	0
金属结构件	0	0	0	0	0	0
塑胶结构件	0	0	0	0	0	0
线缆/ 连接器	0	0	0	0	0	0
介质/其它	0	0	0	0	0	0
包装材料	0	0	0	0	0	0
辅助材	0	0	0	0	0	0

本表格依据SJ/T 11364的规定编制
○：表示该有毒有害物质在该部件所有均质材料中的含量均在GB/T 26572 规定的限量要求以下。
×：表示该有毒有害物质至少在该部件的某一均质材料中的含量超出GB/T 26572 规定的限量要求。

产品合格证
检验员：检01
生产日期：见产品条码

NO.G11257870