AXOR

hansgrohe

AXOR One
Basin mixer Select 170 with push-open waste set
Surfaces: **brushed bronze** Art. no. : **48020140**

Description

product features

- Consists of: Basin mixer, waste set
- ComfortZone 170 provides space for greater freedom of movement
- free-standing installation
- spout 140 mm long
- Spray pattern: normal spray
- Maximum flow rate (at 3 bar): 5 l/min
- Select Cartridge with temperature control
- Material waste set: metal
- if running with a pump, please specify a universal (negative head) pump
- push-open waste set G 1¼

Article Details

Price excl. VAT £ 652.50

Technology

Select · AirPower · Comfort Zone · CoolStart

Design awards

GOLD AWARD 2021

Product image

Scale drawing

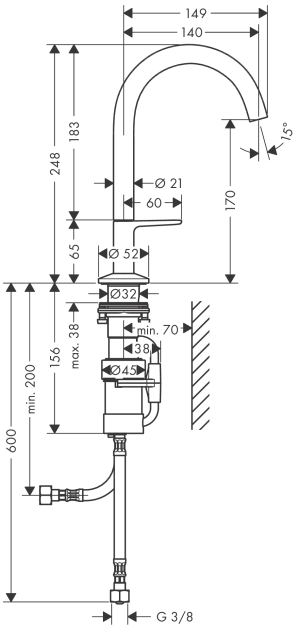
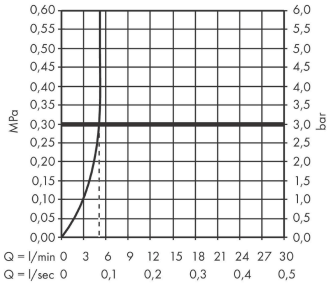
Flowchart