iQ700
EX875BEB1E Induction Hob
Stainless Steel side trim with bevelled front edge
812 mm

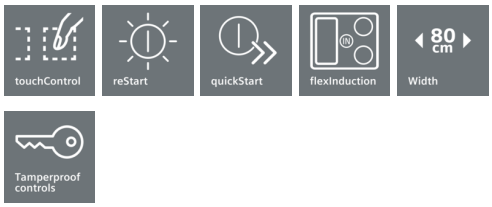

Included accessories

1 x adjustment strip 750 - 780 mm

Optional accessories

HZ390011 Stainless Steel roaster with glas lid

Induction hob with innovative features that enable highly flexible cooking in any situation.

- ✓ Flexible cooking thanks to the innovative flexInduction cooking zone and 2 traditional cooking zones.
- ✓ With touchControl individual the cooking zones can be activated and controlled with the light touch of a single finger.
- ✓ Innovative induction technology is one of the quickest, safest and most efficient methods of cooking.
- ✓ Shorter heating times with up to 50% more power thanks to the powerBoost function.

Features

Technical Data

Product name/family : Cooking zone ceramic
Construction type : Built-in
Energy input : Electric
Total number of positions that can be used at the same time : 4
Required niche size for installation (HxWxD) : 51 x 750-780 x 490-500
Width of the product (mm) : 812
Dimensions of the product (mm) : 51 x 812 x 520
Dimensions of the packed product (HxWxD) (mm) : 126 x 953 x 603
Net weight (kg) : 15.0
Gross weight (kg) : 17.0
Residual heat indicator : Separate
Location of control panel : Hob front
Basic surface material : Ceramic
Color of surface : Alu, brushed, Black
Color of frame : Alu, brushed
Approval certificates : AENOR, CE
Length of electrical supply cord (cm) : 110
EAN code : 4242003830406
Electrical connection rating (W) : 7400
Current (A) : 2*16; 32
Voltage (V) : 220-240
Frequency (Hz) : 50; 60

4 242003 830406

Manufactured by <BSH Legal Name> under Trademark License of Siemens AG

iQ700
EX875BEB1E Induction Hob
Stainless Steel side trim with bevelled front edge
812 mm

Features

Control:

- TouchControl

Special features

- flexInduction zone
- 1 flexInduction zone. Can be used as 2 single induction zones of 380cm2 or 1 flexible induction zone of 760cm2²
- reStart function
- Timer for all zones
  Acoustic signal
- 17 power levels
- Power boost setting
- no

Safety Features

- Automatic pan recognition
  Connection current management (20, 16, 13, 10 Amps options)
  Automatic safety switch off
  Control panel lock
  Control panel pause
- 2 stage residual heat indicators
- Main on/off switch

Power and size:

- Cooking zones: 1 x Ø 400 mmx240 mm, 3.3 KW (max. Power levels 3.7 KW) Induction or 2 x Ø 190 mm, 2.2 KW (max. Powerlevels 3.7 KW) Induction; 1 x Ø 280 mm, 2.6 KW (max. Power levels 3.7 KW) Induction;1 x Ø 145 mm, 1.4 KW (max. Power levels 2.2 KW) Induction

Technical information

- Installation measurements: 750 mmx490 mm
- Connection cable (1.1 M)
- Min. worktop thickness: 30 mm
- Connected load: 7.4 kW
- Cable included in packaging

iQ700
EX875BEB1E Induction Hob
Stainless Steel side trim with bevelled front edge
812 mm

Dimensioned drawings

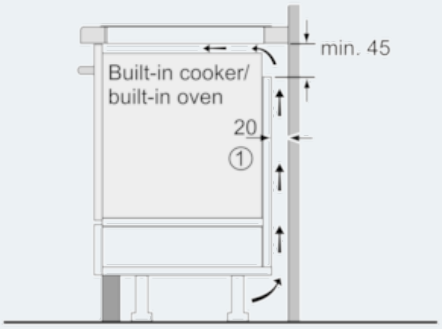

① Ventilation gap must be present

All measurements in mm

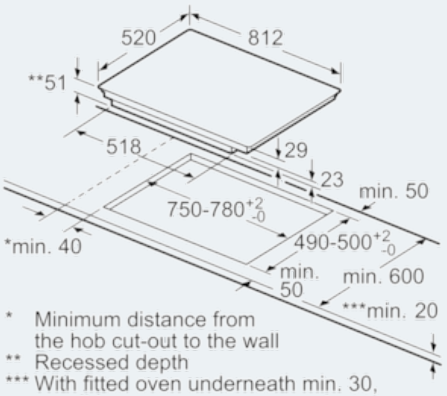

* Minimum distance from the hob cut-out to the wall
** Recessed depth
*** With fitted oven underneath min. 30, possibly more; see space requirements for the oven

measurements in mm

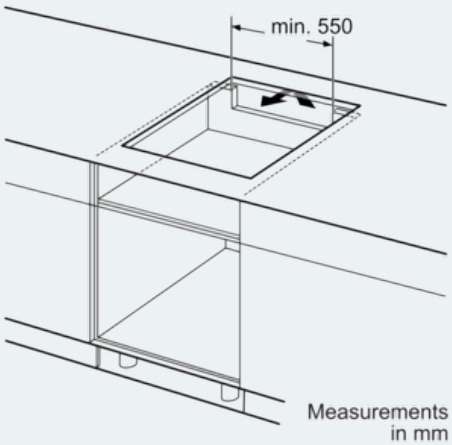

Measurements in mm

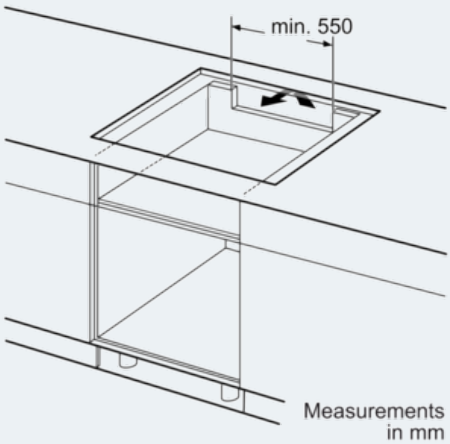

Measurements in mm

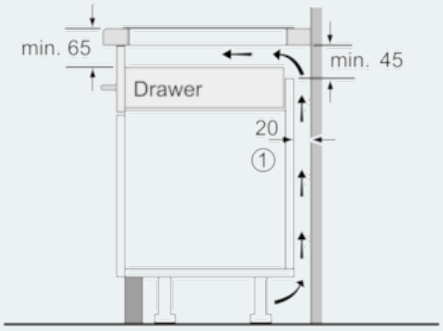

① Ventilation gap must be present.

Measurements in mm