C9Z490-PG
C9Z490-PGW

USER'S MANUAL

Revision 1.0

The information in this user's manual has been carefully reviewed and is believed to be accurate. The manufacturer assumes no responsibility for any inaccuracies that may be contained in this document, and makes no commitment to update or to keep current the information in this manual, or to notify any person or organization of the updates. **Please Note: For the most up-to-date version of this manual, please see our website at www.supermicro.com.**

Super Micro Computer, Inc. ("Supermicro") reserves the right to make changes to the product described in this manual at any time and without notice. This product, including software and documentation, is the property of Supermicro and/or its licensors, and is supplied only under a license. Any use or reproduction of this product is not allowed, except as expressly permitted by the terms of said license.

IN NO EVENT WILL Super Micro Computer, Inc. BE LIABLE FOR DIRECT, INDIRECT, SPECIAL, INCIDENTAL, SPECULATIVE OR CONSEQUENTIAL DAMAGES ARISING FROM THE USE OR INABILITY TO USE THIS PRODUCT OR DOCUMENTATION, EVEN IF ADVISED OF THE POSSIBILITY OF SUCH DAMAGES. IN PARTICULAR, SUPER MICRO COMPUTER, INC. SHALL NOT HAVE LIABILITY FOR ANY HARDWARE, SOFTWARE, OR DATA STORED OR USED WITH THE PRODUCT, INCLUDING THE COSTS OF REPAIRING, REPLACING, INTEGRATING, INSTALLING OR RECOVERING SUCH HARDWARE, SOFTWARE, OR DATA.

Any disputes arising between manufacturer and customer shall be governed by the laws of Santa Clara County in the State of California, USA. The State of California, County of Santa Clara shall be the exclusive venue for the resolution of any such disputes. Supermicro's total liability for all claims will not exceed the price paid for the hardware product.

FCC Statement: This equipment has been tested and found to comply with the limits for a Class B digital device pursuant to Part 15 of the FCC Rules. These limits are designed to provide reasonable protection against harmful interference when the equipment is operated in a consumer environment or residential installation. This equipment generates, uses, and can radiate radio frequency energy and, if not installed and used in accordance with the manufacturer's instruction manual, may cause harmful interference with radio communications. Operation of this equipment in a residential area is likely to cause harmful interference, in which case you will be required to correct the interference at your own expense.

California Best Management Practices Regulations for Perchlorate Materials: This Perchlorate warning applies only to products containing CR (Manganese Dioxide) Lithium coin cells. "Perchlorate Material-special handling may apply. Refer to www.dtsc.ca.gov/hazardouswaste/perchlorate".

WARNING: This product can expose you to chemicals including lead, known to the State of California to cause cancer and birth defects or other reproductive harm. For more information, go to www.P65Warnings.ca.gov.

The products sold by Supermicro are not intended for and will not be used in life support systems, medical equipment, nuclear facilities or systems, aircraft, aircraft devices, aircraft/emergency communication devices or other critical systems whose failure to perform be reasonably expected to result in significant injury or loss of life or catastrophic property damage. Accordingly, Supermicro disclaims any and all liability, and should buyer use or sell such products for use in such ultra-hazardous applications, it does so entirely at its own risk. Furthermore, buyer agrees to fully indemnify, defend and hold Supermicro harmless for and against any and all claims, demands, actions, litigation, and proceedings of any kind arising out of or related to such ultra-hazardous use or sale.

Manual Revision 1.0

Release Date: May 13, 2020

Unless you request and receive written permission from Super Micro Computer, Inc., you may not copy any part of this document. Information in this document is subject to change without notice. Other products and companies referred to herein are trademarks or registered trademarks of their respective companies or mark holders.

Copyright © 2020 by Super Micro Computer, Inc.
All rights reserved.
Printed in the United States of America

Preface

About This Manual

This manual is written for system integrators, IT technicians and knowledgeable end users. It provides information for the installation and use of the C9Z490-PG/-PGW motherboard.

About This Motherboard

The Supermicro C9Z490-PG/-PGW supports a single 10th Gen Intel® Core™ i9/i7/i5/i3, Pentium®, and Celeron® series (LGA1200) processor with up to 10 cores and a thermal design power (TDP) of up to 125W. Built with the Intel PCH Z490 chipset, this motherboard supports up to 128GB of Unbuffered non-ECC UDIMM with speeds of up to 2933MHz (by CPU) in four 288-pin memory slots, two M.2 sockets, 1G/10G Base-T ports, and a Trusted Platform Module (TPM) header. The C9Z490-PG/-PGW is optimized for high-performance, high-end computing platforms that address the needs of next generation server applications. Please note that this motherboard is intended to be installed and serviced by professional technicians only. For processor/memory updates, please refer to our website at http://www.supermicro.com/products/.

Conventions Used in the Manual

Special attention should be given to the following symbols for proper installation and to prevent damage done to the components or injury to yourself:

Warning! Indicates important information given to prevent equipment/property damage or personal injury.

Warning! Indicates high voltage may be encountered while performing a procedure.

Important: Important information given to ensure proper system installation or to relay safety precautions.

Note: Additional Information given to differentiate various models or to provide information for proper system setup.

Contacting Supermicro

Headquarters

Address:	Super Micro Computer, Inc. 980 Rock Ave. San Jose, CA 95131 U.S.A.
Tel:	+1 (408) 503-8000
Fax:	+1 (408) 503-8008
Email:	marketing@supermicro.com (General Information) support@supermicro.com (Technical Support)
Website:	www.supermicro.com

Europe

Address:	Super Micro Computer B.V. Het Sterrenbeeld 28, 5215 ML 's-Hertogenbosch, The Netherlands
Tel:	+31 (0) 73-6400390
Fax:	+31 (0) 73-6416525
Email:	sales@supermicro.nl (General Information) support@supermicro.nl (Technical Support) rma@supermicro.nl (Customer Support)
Website:	www.supermicro.nl

Asia-Pacific

Address:	Super Micro Computer, Inc. 3F, No. 150, Jian 1st Rd. Zhonghe Dist., New Taipei City 235 Taiwan (R.O.C)
Tel:	+886-(2) 8226-3990
Fax:	+886-(2) 8226-3992
Email:	support@supermicro.com.tw
Website:	www.supermicro.com.tw

Table of Contents

Chapter 1 Introduction

1.1 Checklist 8
Quick Reference 12
Quick Reference Table 13
Motherboard Features 15
1.2 Processor and Chipset Overview 18
1.3 Special Features 18
Recovery from AC Power Loss 18
1.4 System Health Monitoring 19
Onboard Voltage Monitors 19
Fan Status Monitor with Firmware Control 19
Environmental Temperature Control 19
System Resource Alert 19
1.5 ACPI Features 20
Slow Blinking LED for Suspend-state Indicator 20
1.6 Power Supply 20
1.7 Serial Header 21
1.8 Super I/O 21
1.9 Intel Optane DC Persistent Memory Overview 21

Chapter 2 Installation

2.1 Static-Sensitive Devices 22
Precautions 22
Unpacking 22
2.2 Processor and Heatsink Installation 23
Installing the LGA1200 Processor 23
Installing an Active CPU Heatsink with Fan 26
Removing an Active CPU Heatsink with Fan 27
2.3 Motherboard Installation 28
Tools Needed 28
Location of Mounting Holes 28
Installing the Motherboard 29

2.4 Memory Support and Installation 30
General Guidelines for Optimizing Memory Performance 30
DIMM Installation 31
DIMM Removal 31
2.5 M.2 Installation (optional) 32
2.6 Rear I/O Ports 34
2.7 Front Control Panel 38
2.8 Connectors 42
Power Connections 42
Headers 44
2.9 Jumper Settings 51
How Jumpers Work 51
2.10 LED Indicators 55

Chapter 3 Troubleshooting

3.1 Troubleshooting Procedures 58
Before Power On 58
No Power 58
No Video 59
System Boot Failure 59
Memory Errors 59
Losing the System's Setup Configuration 60
When the System Becomes Unstable 60
3.2 Technical Support Procedures 61
3.3 Frequently Asked Questions 62
3.4 Battery Removal and Installation 63
Battery Removal 63
Proper Battery Disposal 63
Battery Installation 63
3.5 Returning Merchandise for Service 64

Chapter 4 UEFI BIOS

4.1 Introduction 65
4.2 EZ Mode 67
4.3 Main 68
4.4 Overclocking 70
4.5 Advanced 92
4.6 H/W Monitor 125
4.7 Boot 127
4.8 Save & Exit 129
4.9 BIOS Update 131

Appendix A BIOS Codes

A.1 BIOS Error POST (Beep) Codes 132
A.2 Additional BIOS POST Codes 133

Appendix B Software

B.1 Driver Installation 134
B.2 SuperDoctor® 5 135

Appendix C Standardized Warning Statements

Appendix D UEFI BIOS Recovery

D.1 Overview 139
D.2 Recovering the UEFI BIOS Image 139
D.3 Recovering the Main BIOS Block with a USB Device 139

Chapter 1

Introduction

Congratulations on purchasing your computer motherboard from an industry leader. Supermicro motherboards are designed to provide you with the highest standards in quality and performance.

In addition to the motherboard, several important parts that are included in the retail box are listed below. If anything listed is damaged or missing, please contact your retailer.

1.1 Checklist

Main Parts List		
Description	**Part Number**	**Quantity**
Supermicro Motherboard	C9Z490-PG/-PGW	1
I/O Shield	MCP-260-00147-0N	1
SATA Cables	CBL-SAST-1000-2	2
	CBL-SAST-1001-2 (Right-Angle SATA Cable)	2
Quick Reference Guide	MNL-2238-QRG	1
Antenna	(For C9Z490-PGW only)	2
S-Connector*	JMP-0010L-0000-PRX	1

Note: The S-Connector is a plug designed to connect the front control panel header on the motherboard and front control panel cables of chassis.

Important Links

For your system to work properly, please follow the links below to download all necessary drivers/utilities and the user's manual for your server.

- Supermicro product manuals: http://www.supermicro.com/support/manuals/
- Product drivers and utilities: https://www.supermicro.com/wftp/driver
- Product safety info: https://www.supermicro.com/en/about/policies/safety-information
- A secure data deletion tool designed to fully erase all data from storage devices can be found at our website: https://www.supermicro.com/about/policies/disclaimer.cfm?url=/wftp/utility/Lot9_Secure_Data_Deletion_Utility/
- If you have any questions, please contact our support team at: support@supermicro.com

This manual may be periodically updated without notice. Please check the Supermicro website for possible updates to the manual revision level.

Figure 1-1. C9Z490-PGW Motherboard Image

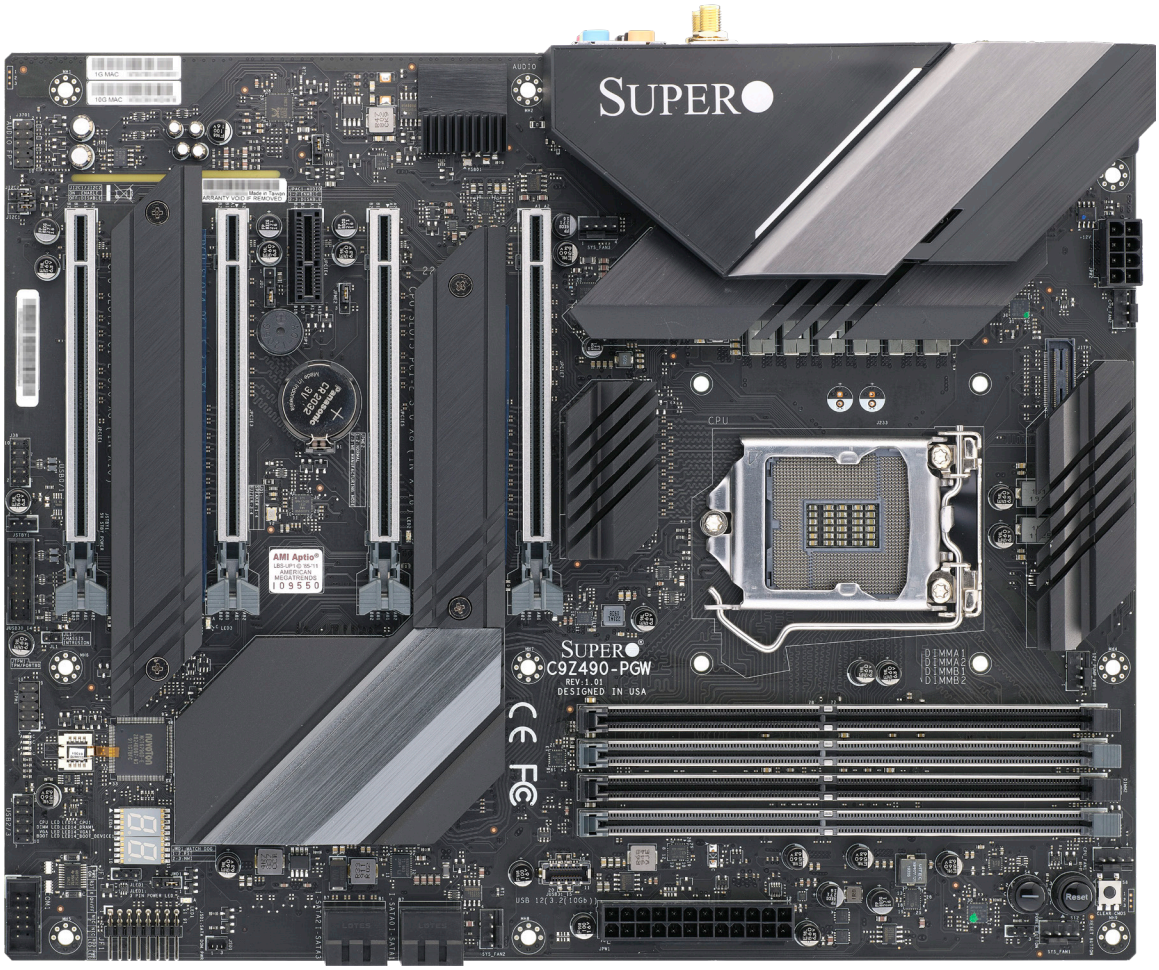

Differences between C9Z490-PG and C9Z490-PGW		
	C9Z490-PG	**C9Z490-PGW**
PCI-E M.2 E Key for WiFi and Bluetooth	No	Yes

Note: All graphics shown in this manual were based upon the latest PCB revision available at the time of publication of the manual. The motherboard you received may or may not look exactly the same as the graphics shown in this manual.

Figure 1-2. C9Z490-PG Motherboard Layout
(not drawn to scale)

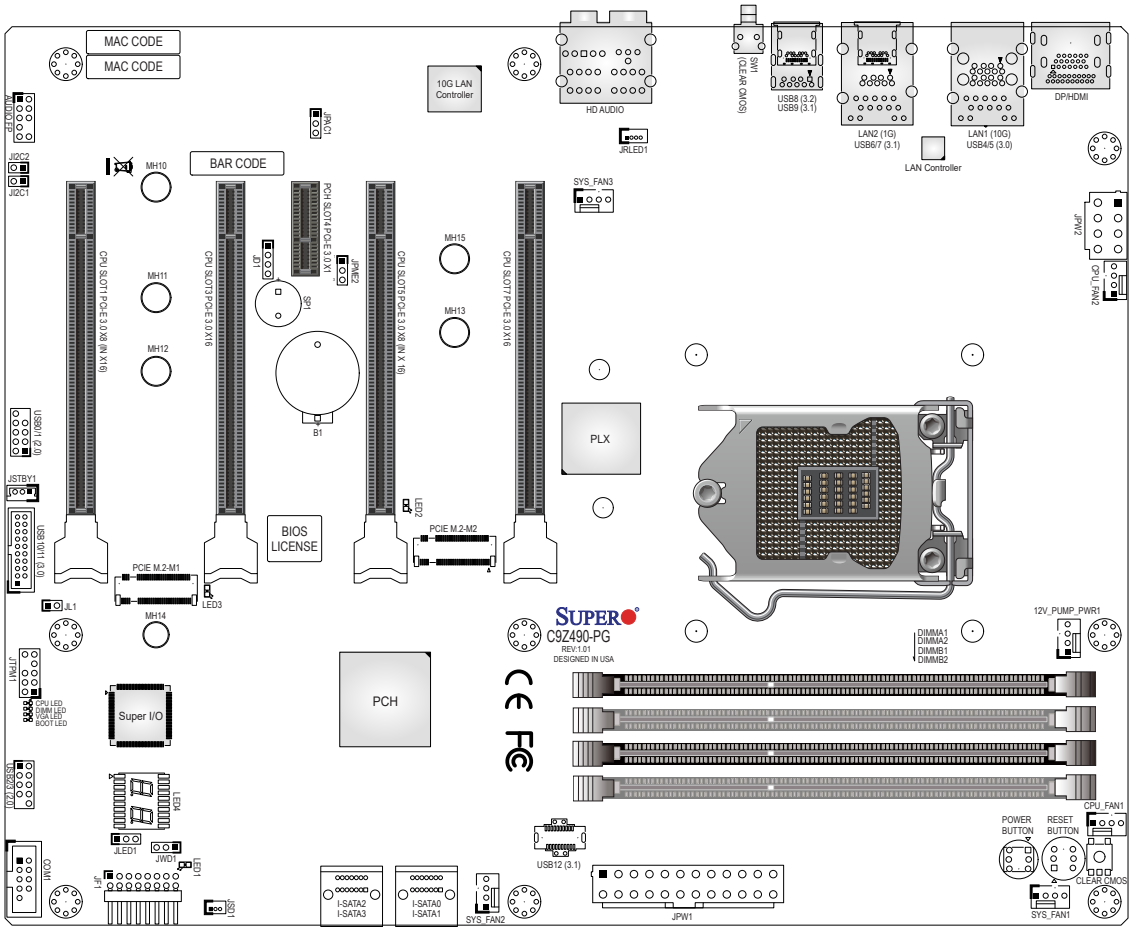

Note: Components not documented are for internal testing only.

Figure 1-2. C9Z490-PGW Motherboard Layout
(not drawn to scale)

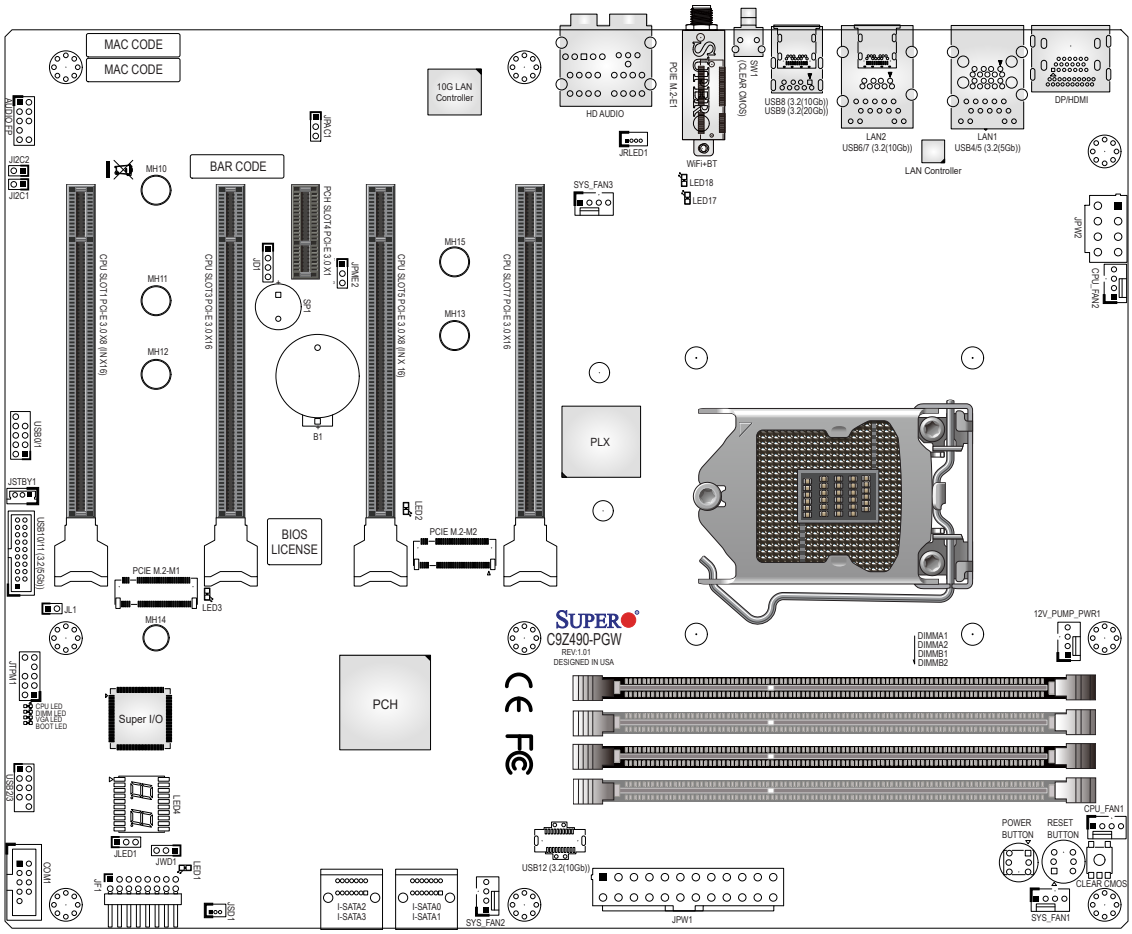

Differences between C9Z490-PG and C9Z490-PGW		
	C9Z490-PG	**C9Z490-PGW**
PCI-E M.2 E Key for WiFi and Bluetooth	No	Yes

Note: Components not documented are for internal testing only.

Quick Reference

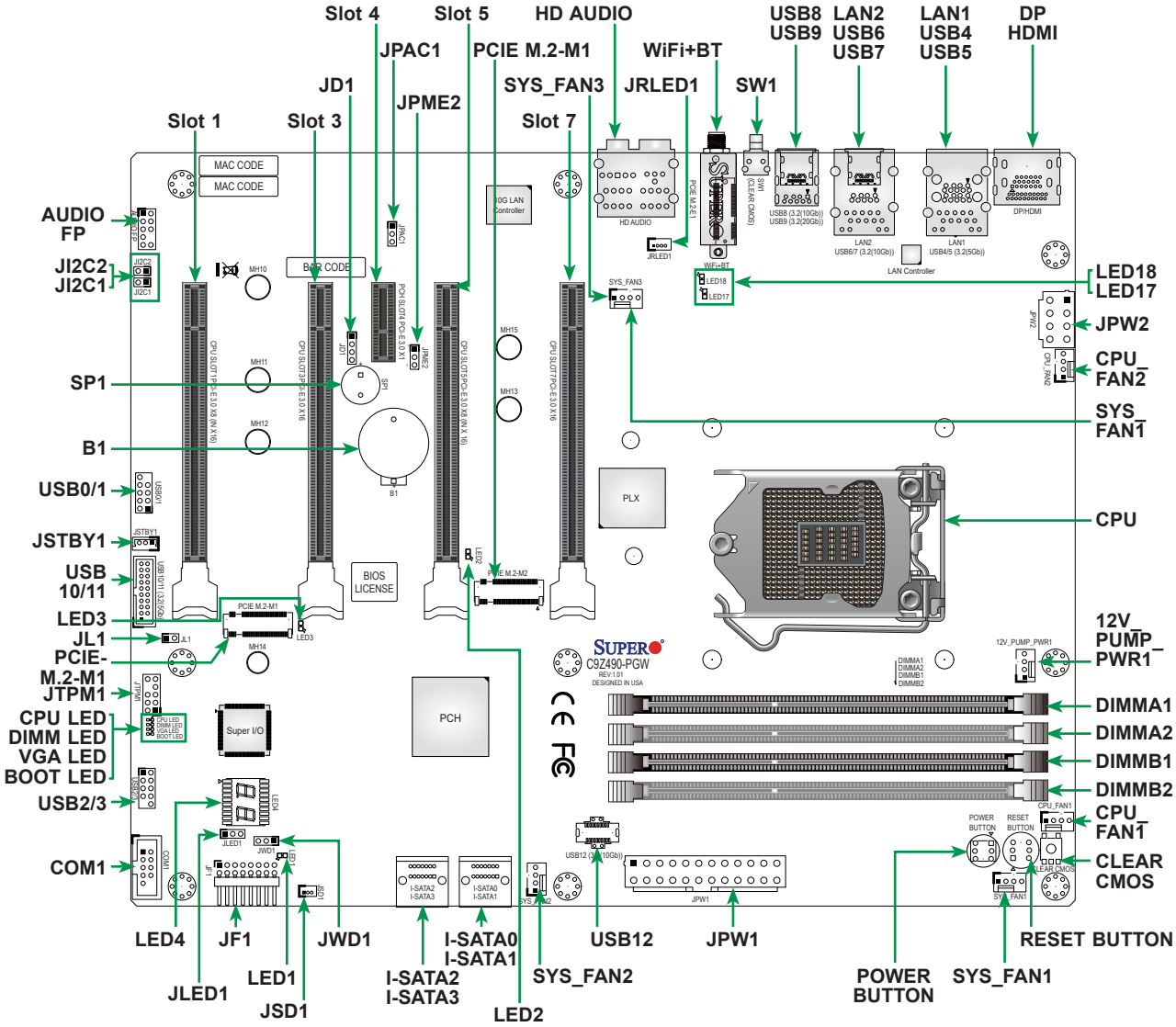

Notes:

- Refer to Chapter 2 for detailed information on jumpers, I/O ports, and JF1 front panel connections.
- " ■ " indicates the location of Pin 1.
- Jumpers/LED indicators not indicated are used for testing only.
- Use only the correct type of onboard CMOS battery as specified by the manufacturer. Do not install the onboard battery upside down to avoid possible explosion.

Quick Reference Table

Jumper	Description	Default Setting
CLEAR CMOS	Clear CMOS Switch	Push Button Switch
JI2C1/JI2C2	SMB to PCI-E Slots	Open (Off): Disable
JPAC1	Audio Enable/Disable	Pins 1-2 (Enable)
JPME2	Intel Manufacturing Mode	Pins 1-2 (Normal)
JWD1	Watch Dog Function Enable	Pins 1-2 (RST)
POWER BUTTON	Internal Power Button	Push Button Switch
RESET BUTTON	Onboard System Reset Button	Push Button Switch
SW1	Back Panel Clear CMOS Switch	Push Button Switch

LED	Description	Color/State
BOOT LED	Bootable Device POST (Power-On Self-Test) Status	Bootable Device POST: Orange ON Bootable Device POST Completion: OFF
CPU LED	CPU POST (Power-On Self-Test) Status	CPU POST: Yellow ON CPU POST Completion: OFF
DIMM LED	DIMM POST (Power-On Self-Test) Status	DIMM POST: Blue ON DIMM POST Completion: OFF
LED1	Onboard Power LED S3 (Suspend to RAM) LED	Power On: Green On S3: Green Blinking
LED17	WLAN POST (Power-On Self-Test) Status	WLAN POST: Green ON WLAN POST Completion: OFF
LED18	Bluetooth Device POST (Power-On Self-Test) Status	Bluetooth Device POST: Green ON Bluetooth Device POST Completion: OFF
LED2	PCI-E M.2-M2 Socket LED	PCI-E Device Detected: Green ON Activity: Green Blinking
LED3	PCI-E M.2-M1 Socket LED	PCI-E Device Detected: Green ON Activity: Green Blinking
LED4	BIOS POST Code LED	Digital Readout
VGA LED	Onboard VGA POST (Power-On Self-Test) Status	Onboard VGA POST: Green ON Onboard VGA POST Completion: OFF

Note: The table above is continued on the next page.

Connector	Description
12V_PUMP_PWR1	12V 4-pin Power Connector for CPU Liquid Cooling Pump
AUDIO FP	Front Panel Audio Header
B1	Onboard Battery
COM1	COM1 Header
CPU_FAN1 ~ CPU_FAN2	CPU Fan Headers
DP	Back Panel DisplayPort
HD AUDIO	High Definition Audio Ports
HDMI	Back Panel High Definition Multimedia Interface
I-SATA0~3	(Intel Z490) Serial ATA (SATA 3.0) Ports 0~3 (6Gb/sec)
JD1	Speaker/Buzzer (Pins 1~4: External Speaker, Pins 3~4: Buzzer)
JF1	Front Control Panel Header
JL1	Chassis Intrusion Header
JLED1	Power LED Indicator Header
JPW1	24-pin ATX Main Power Connector (Required)
JPW2	+12V 8-pin CPU Power Connector (Required)
JRLED1	4-pin Connector for a White Light LED Board (Pre-installed) Inside the I/O cover
JSD1	SATA DOM (Disk-On-Module) Power Connector
JSTBY1	Standby Power Header
JTPM1	Trusted Platform Module (TPM)/Port 80 Header
LAN1/LAN2	RJ45 1GbE/10GbE LAN Ports
PCIE M.2-E1	M.2 E Key Socket for WiFi Module (Pre-installed, for C9Z490-PGW only)
PCIE M.2-M1/M.2-M2	PCI-E M.2 M Key Sockets. Small Form Factor Devices and Other Portable Devices for High Speed NVMe SSDs
SLOT1/5	PCI-E x16 Slots (PCI-E 3.0 x8 link)
SLOT3/7	PCI-E x16 Slots (PCI-E 3.0 x16 link)
SLOT4	PCI-E x1 Slot (PCI-E 3.0 x1 link)
SP1	Internal Speaker/Buzzer
SYS_FAN1 ~ SYS_FAN3	System Fan Headers
USB 0/1, 2/3	Front Panel Accessible USB 2.0 Headers
USB 4/5	Back Panel USB 3.2 Gen 1 Ports (Type A)
USB 6	Back Panel USB 3.2 Gen 2 Port (Type A)
USB 7	Back Panel USB 3.2 Gen 2 Port (Type C)
USB 8	Back Panel USB 3.2 Gen 2 Port (Type A)
USB 9	Back Panel USB 3.2 Gen 2x2 Port (Type C)
USB 10/11	Front Panel Accessible USB 3.2 Gen 1 Header
USB 12	Front Panel Accessible USB 3.2 Gen 2 20-pin Connector

Motherboard Features

Motherboard Features	
CPU	
• Supports a single 10th Gen Intel Core i9/i7/i5/i3, Pentium, and Celeron series processor with up to 10 cores and a thermal design power (TDP) of up to 125W	
Memory	
• Supports up to 128 of Unbuffered non-ECC UDIMM (288-pin) memory with speeds of up to 2933 MHz in four memory slots.	
DIMM Size	
• Up to 128GB at 1.2V **Note 1:** Memory capacity and frequency is CPU dependent. **Note 2:** For the latest CPU/memory updates, please refer to our website at http://www.supermicro.com/products/motherboard.	
Chipset	
• Intel PCH Z490	
Expansion Slots	
• One (1) PCI-E 3.0 x1 Slot (PCH SLOT4) • Two (2) PCI-E 3.0 x8/x16 Slots (CPU SLOT1, CPU SLOT5: Supports Auto Switch) • One (1) PCI-E 3.0 x16 Slot (CPU Slot 3, CPU Slot 7) • Two (2) M.2 PCI-E 3.0 x4 Sockets (Support M Key 2260, 2280, and 22110)	
Network	
• Intel Ethernet i219-V • Aquantia Ethernet AQC107	
I/O Devices	
• Serial (COM) Port	• One (1) front accessible serial port header (COM1)
• SATA 3.0	• Four (4) SATA 3.0 ports at 6 Gb/s (I-SATA0~3 with RAID 0, 1, 5, 10)
• Video Port	• One (1) DisplayPort connection on the rear I/O panel • One (1) HDMI connection on the rear I/O panel
Peripheral Devices	
• Two (2) front accessible USB 2.0 headers with four (4) USB connections (USB0/1, USB2/3) • Two (2) USB 3.2 Gen 1 ports on the rear I/O panel (USB4/5) • Three (3) USB 3.2 Gen 2 ports on the rear I/O panel (USB6/7/8) • One (1) USB 3.2 Gen 2x2 port on the rear I/O panel (USB9) • One (1) front accessible USB 3.2 Gen 1 header with two (2) USB connections (USB10/11) • One (1) front accessible USB 3.2 Gen 2 20-pin connector with one (1) USB connections (USB12)	

Note: The table above is continued on the next page.

Motherboard Features
BIOS
• 256Mb AMI BIOS® SPI Flash BIOS • ACPI 6.0, Plug and Play (PnP), BIOS rescue hot-key, riser card auto detection support, and SMBIOS 3.0 or later
Power Management
• ACPI power management • Power button override mechanism • Power-on mode for AC power recovery • Wake-on-LAN • Power supply monitoring
System Health Monitoring
• Onboard voltage monitoring for +12V, +5V, +3.3V, CPU, Memory, VBAT, +5V stdby, +3.3V stdby, +1.8V PCH, +1.05V PCH, +1.0V PCH, CPU temperature, VRM temperature, LAN temperature, PCH temperature, system temperature, and memory temperature • 5 CPU switch phase voltage regulator • CPU thermal trip support • Platform Environment Control Interface (PECI)/TSI
Fan Control
• Single cooling zone • Multi-speed fan control via onboard Super I/O • Five (5) 4-pin fan headers
System Management
• Trusted Platform Module (TPM) support • SuperDoctor® 5 • Chassis intrusion header and detection (**Note:** Please connect a cable from the Chassis Intrusion header at JL1 to the chassis to receive an alert)
LED Indicators
• CPU/system overheat LED • Power/suspend-state indicator LED • Fan failed LED • HDD activity LED • LAN activity LED
Dimensions
• 12" (W) x 9.6" (L) ATX (304.8mm x 243.84mm)

Note: The CPU maximum thermal design power (TDP) is subject to chassis and heatsink cooling restrictions. For proper thermal management, please check the chassis and heatsink specifications for proper CPU TDP sizing.

Figure 1-3.
System Block Diagram

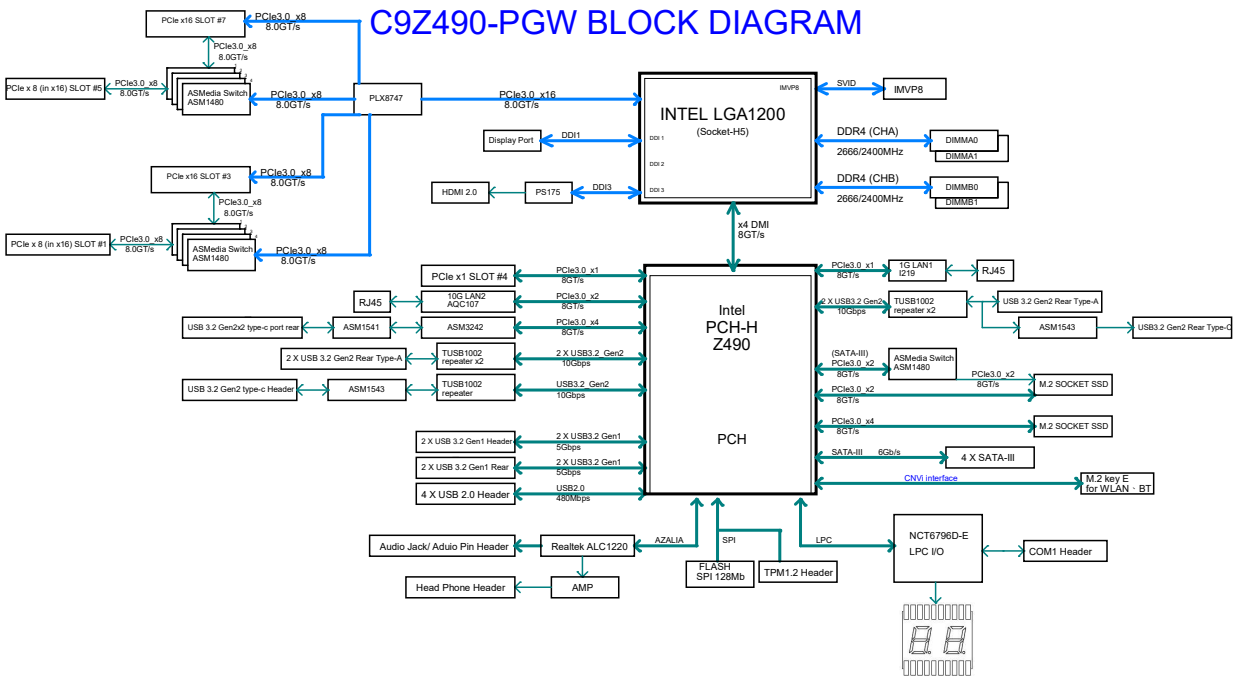

Differences between C9Z490-PG and C9Z490-PGW		
	C9Z490-PG	**C9Z490-PGW**
PCI-E M.2 E Key for WiFi and Bluetooth	No	Yes

Note: This is a general block diagram and may not exactly represent the features on your motherboard. Refer to the previous pages for the actual specifications of your motherboard.

1.2 Processor and Chipset Overview

Built upon the functionality and capability of the 10th Gen Intel Core i9/i7/i5/i3, Pentium, and Celeron series (LAG1200 processor and the Intel PCH Z490 chipset, the C9Z490-PG/-PGW motherboard provides system performance, power efficiency, and feature sets to address the needs of next-generation computer users.

With the support of the new Intel Microarchitecture 14nm Process Technology, the C9Z490-PG/-PGW dramatically increases system performance for a multitude of server applications.

The Intel PCH Z490 chipset provides support, including the following features:

- DDR4 288-pin memory support
- Direct Media Interface
- Intel Matrix Storage Technology and Intel Rapid Storage Technology
- Dual NAND Interface
- Intel I/O Virtualization (VT-d) Support
- Intel Trusted Execution Technology Support
- PCI-E 3.0 Interface (up to 8 GT/s)
- SATA Controller (up to 6Gb/sec)
- Advanced Host Controller Interface (AHCI)

1.3 Special Features

Recovery from AC Power Loss

The Basic I/O System (BIOS) provides a setting that determines how the system will respond when AC power is lost and then restored to the system. You can choose for the system to remain powered off (in which case you must press the power switch to turn it back on), or for it to automatically return to the power-on state. Refer to the Advanced section for this setting. The default setting is **Last State.**

1.4 System Health Monitoring

Onboard Voltage Monitors

An onboard voltage monitor will scan the voltages of the onboard chipset, memory, CPU, and battery continuously. Once a voltage becomes unstable, a warning is given, or an error message is sent to the screen. The user can adjust the voltage thresholds to define the sensitivity of the voltage monitor.

Fan Status Monitor with Firmware Control

PC health monitoring in the BIOS can check the RPM status of the cooling fans. The onboard CPU and chassis fans are controlled by Thermal Management via SIO.

Environmental Temperature Control

The thermal control sensor monitors the CPU temperature in real time and will turn on the thermal control fan whenever the CPU temperature exceeds a user-defined threshold. The overheat circuitry runs independently from the CPU. Once the thermal sensor detects that the CPU temperature is too high, it will automatically turn on the thermal fans to prevent the CPU from overheating. The onboard chassis thermal circuitry can monitor the overall system temperature and alert the user when the chassis temperature is too high.

Note: To avoid possible system overheating, please be sure to provide adequate air-flow to your system.

System Resource Alert

This feature is available when used with SuperDoctor 5 in the Windows OS or in the Linux environment. SuperDoctor is used to notify the user of certain system events. For example, you can configure SuperDoctor to provide you with warnings when the system temperature, CPU temperatures, voltages and fan speeds go beyond a predefined range.

1.5 ACPI Features

ACPI stands for Advanced Configuration and Power Interface. The ACPI specification defines a flexible and abstract hardware interface that provides a standard way to integrate power management features throughout a computer system, including its hardware, operating system and application software. This enables the system to automatically turn on and off peripherals such as CD-ROMs, network cards, hard disk drives and printers.

In addition to enabling operating system-directed power management, ACPI also provides a generic system event mechanism for Plug and Play, and an operating system-independent interface for configuration control. ACPI leverages the Plug and Play BIOS data structures, while providing a processor architecture-independent implementation that is compatible with appropriate Windows operating systems. For detailed information regarding OS support, please refer to the Supermicro website.

Slow Blinking LED for Suspend-state Indicator

When the CPU goes into a suspend state, the chassis power LED will start to blink to indicate that the CPU is in suspend mode. When the user presses any key, the CPU will "wake up," and the LED will automatically stop blinking and remain on.

1.6 Power Supply

As with all computer products, a stable power source is necessary for proper and reliable operation. It is even more important for processors that have high CPU clock rates where noisy power transmission is present.

The C9Z490-PG/-PGW motherboard accommodates a 24-pin ATX power supply. Although most power supplies generally meet the specifications required by the CPU, some are inadequate. In addition, one 12V 8-pin power connection is also required to ensure adequate power supply to the system. Also, your power supply must supply 1.5A for the Ethernet ports.

> **Warning:** To avoid damaging the power supply or the motherboard, be sure to use a power supply that contains a 24-pin and an 8-pin power connector. Be sure to connect the power supplies to the 24-pin power connector (JPW1), and the 8-pin power connector (JPW2) on the motherboard. Failure in doing so may void the manufacturer warranty on your power supply and motherboard.

It is strongly recommended that you use a high quality power supply that meets ATX power supply Specification 2.02 or later. It must also be SSI compliant. (For more information, please refer to the website at http://www.ssiforum.org/).

1.7 Serial Header

The C9Z490-PG/-PGW motherboard supports one serial communication connection. The COM header can be used for input/output. The UART provides legacy speeds with a baud rate of up to 115.2 Kbps as well as an advanced speed with baud rates of 250 K, 500 K, or 1 Mb/s, which support high-speed serial communication devices.

1.8 Super I/O

The Super I/O supports one high-speed, 16550 compatible serial communication port (UART). Each UART includes a 16-byte send/receive FIFO, a programmable baud rate generator, complete modem control capability and a processor interrupt system. The UART provides legacy speed with a baud rate of up to 115.2 Kbps as well as an advanced speed with baud rates of 250 K, 500 K, or 1 Mb/s, which support higher speed modems.

The Super I/O provides functions that comply with ACPI (Advanced Configuration and Power Interface), which includes support of legacy and ACPI power management through an SMI or SCI function pin. It also features auto power management to reduce power consumption.

1.9 Intel Optane DC Persistent Memory Overview

10th Gen Intel Core i9/i7/i5/i3, Pentium, and Celeron series processors support new DCPMM (Optane™ DC Persistent Memory Modules) technology. DCPMM offers data persistence at higher capacities with lower latencies than the existing memory modules. It also provides hyper-speed storage capabilities for higher performance computing platforms with flexible configuration options.

Chapter 2

Installation

2.1 Static-Sensitive Devices

Electrostatic Discharge (ESD) can damage electronic components. To avoid damaging your system board, it is important to handle it very carefully. The following measures are generally sufficient to protect your equipment from ESD.

Precautions

- Use a grounded wrist strap designed to prevent static discharge.
- Touch a grounded metal object before removing the board from the antistatic bag.
- Handle the motherboard by its edges only; do not touch its components, peripheral chips, memory modules or gold contacts.
- When handling chips or modules, avoid touching their pins.
- Put the motherboard and peripherals back into their antistatic bags when not in use.
- For grounding purposes, make sure that your computer chassis provides excellent conductivity between the power supply, the case, the mounting fasteners and the motherboard.
- Use only the correct type of onboard CMOS battery. Do not install the onboard battery upside down to avoid possible explosion.

Unpacking

The motherboard is shipped in antistatic packaging to avoid static damage. When unpacking the motherboard, make sure that the person handling it is static protected.

2.2 Processor and Heatsink Installation

The processor (CPU) and processor carrier should be assembled together first to form the processor carrier assembly. This will be attached to the heatsink to form the processor heatsink module (PHM) before being installed onto the CPU socket.

Notes:

- Use ESD protection.
- Unplug the AC power cord from all power supplies after shutting down the system.
- Check that the plastic protective cover is on the CPU socket and none of the socket pins are bent. If they are, contact your retailer.
- When handling the processor, avoid touching or placing direct pressure on the LGA lands (gold contacts). Improper installation or socket misalignment can cause serious damage to the processor or CPU socket, which may require manufacturer repairs.
- Thermal grease is pre-applied on a new heatsink. No additional thermal grease is needed.
- Refer to the Supermicro website for updates on processor support.
- All graphics in this manual are for illustrations only. Your components may look different.

Installing the LGA1200 Processor

1. Press the load lever to release the load plate, which covers the CPU socket, from its locking position.

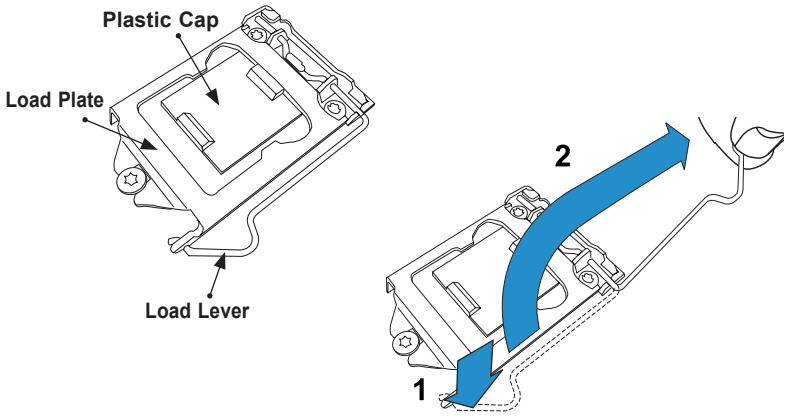

2. Gently lift the load lever to open the load plate. Remove the plastic cap.

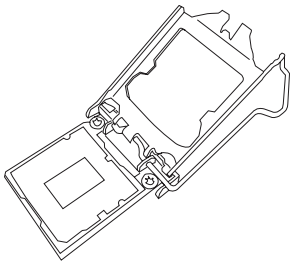

3. Use your thumb and your index finger to hold the CPU at the North center edge and the South center edge of the CPU.

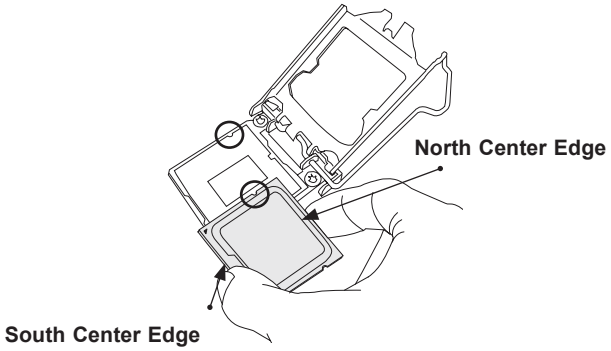

4. Align the small triangle marker on the CPU to its corresponding triangle marker on the load bracket. Once it is aligned, carefully lower the CPU straight down into the socket. (Do not drop the CPU on the socket, or move it horizontally or vertically.)

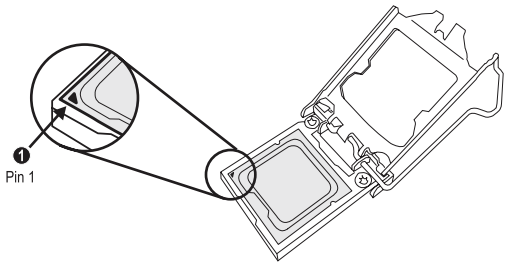

5. Do not rub the CPU against the surface or against any pins of the socket to avoid damaging the CPU or the socket.)
6. With the CPU inside the socket, inspect the four corners of the CPU to make sure that the CPU is properly installed.
7. Use your thumb to gently push the load lever down to the lever lock.
8. Close the load plate with the CPU inside the socket. Lock the "Close 1st" lever first, then lock the "Open 1st" lever second. Gently push the load levers down to the lever locks.

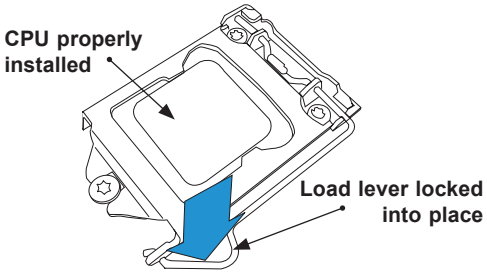

! **Attention!** You can only install the CPU inside the socket in one direction. Make sure that it is properly inserted into the CPU socket before closing the load plate. If it doesn't close properly, do not force it as it may damage your CPU. Instead, open the load plate again and double-check that the CPU is aligned properly.

Installing an Active CPU Heatsink with Fan

1. Apply the proper amount of thermal grease to the heatsink.
2. Place the heatsink on top of the CPU so that the four mounting holes on the heatsink are aligned with those on the retention mechanism.
3. Tighten the screws in the following order:

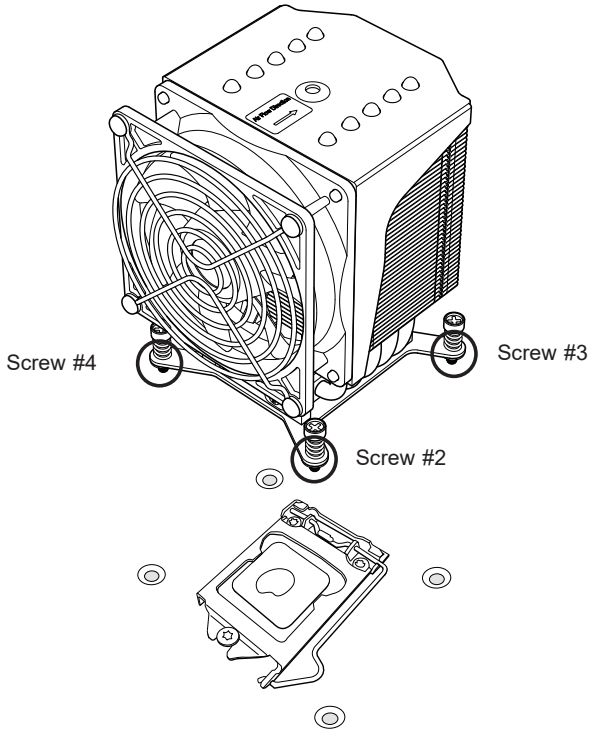

4. Once the screws are tightened, plug the power connector of cooler into either CPU_ FAN1 or CPU_FAN2 header.

Note 1: Screw #1 is not shown in the illustration.

Note 2: Graphic drawings included in this manual are for reference only. They might look different from the components installed in your system.

Removing an Active CPU Heatsink with Fan

Warning: We do not recommend that the CPU or heatsink be removed. However, if you do need to remove the heatsink, please follow the instruction below to uninstall the heatsink to avoid damaging the CPU or other components.

1. Unplug the power cord from the power supply and power connector of cooler from fan header on the motherboard.
2. Loosen the screws in the order below.
3. Gently wiggle the heatsink to loosen it. Do not use excessive force when wiggling the heatsink.

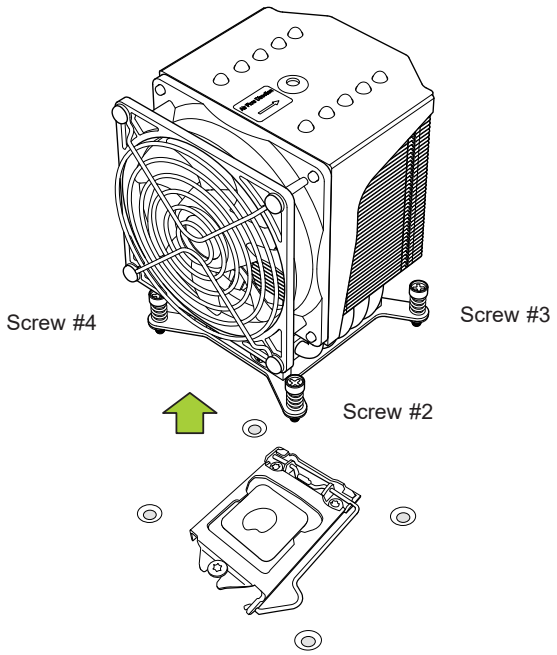

4. Once the heatsink is loosened, remove it from the motherboard.

Note: Screw #1 is not shown in the illustration.

2.3 Motherboard Installation

All motherboards have standard mounting holes to fit different types of chassis. Make sure that the locations of all the mounting holes for both the motherboard and the chassis match. Although a chassis may have both plastic and metal mounting fasteners, metal ones are highly recommended because they ground the motherboard to the chassis. Make sure that the metal standoffs click in or are screwed in tightly.

Tools Needed

Phillips Screwdriver (1)

Phillips Screws (9)

Standoffs (9) Only if Needed

Location of Mounting Holes

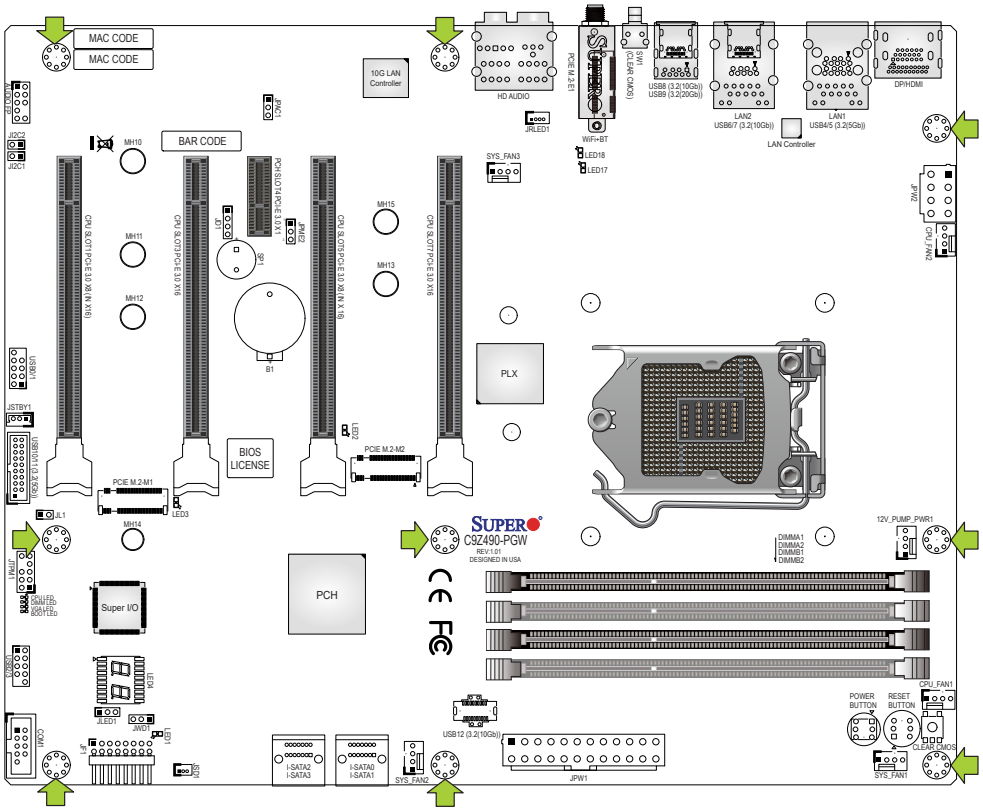

Notes: 1. To avoid damaging the motherboard and its components, please do not use a force greater than 8 lbf-in on each mounting screw during motherboard installation. 2. Some components are very close to the mounting holes. Please take precautionary measures to avoid damaging these components when installing the motherboard to the chassis.

Installing the Motherboard

1. Install the I/O shield into the back of the chassis, if applicable.

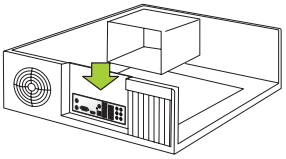

2. Locate the mounting holes on the motherboard. Refer to the previous page for the location.

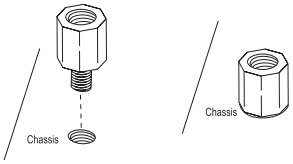

3. Locate the matching mounting holes on the chassis. Align the mounting holes on the motherboard against the mounting holes on the chassis.

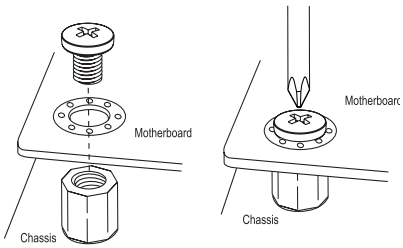

4. Install standoffs in the chassis as needed.
5. Install the motherboard into the chassis carefully to avoid damaging other motherboard components.
6. Using the Phillips screwdriver, insert a pan head #6 screw into a mounting hole on the motherboard and its matching mounting hole on the chassis.
7. Repeat Step 6 to insert #6 screws into all mounting holes.
8. Make sure that the motherboard is securely placed in the chassis.

Note: Images displayed are for illustration only. Your chassis or components might look different from those shown in this manual.

2.4 Memory Support and Installation

Note: Check the Supermicro website for recommended memory modules.

Important: Exercise extreme care when installing or removing DIMM modules to prevent any possible damage.

General Guidelines for Optimizing Memory Performance

- When installing memory modules, the DIMM slots should be populated in the following order: DIMMA2, DIMMB2, then DIMMA1, DIMMB1.
- Only populate DIMMA1 and DIMMB1 if the extra memory support is needed.
- Always use DDR4 memory of the same type, size and speed.
- Mixed DIMM speeds can be installed. However, all DIMMs will run at the speed of the slowest DIMM.
- The motherboard will support odd-numbered modules (one or three modules installed). However, to achieve the best memory performance, a balanced memory population is recommended.

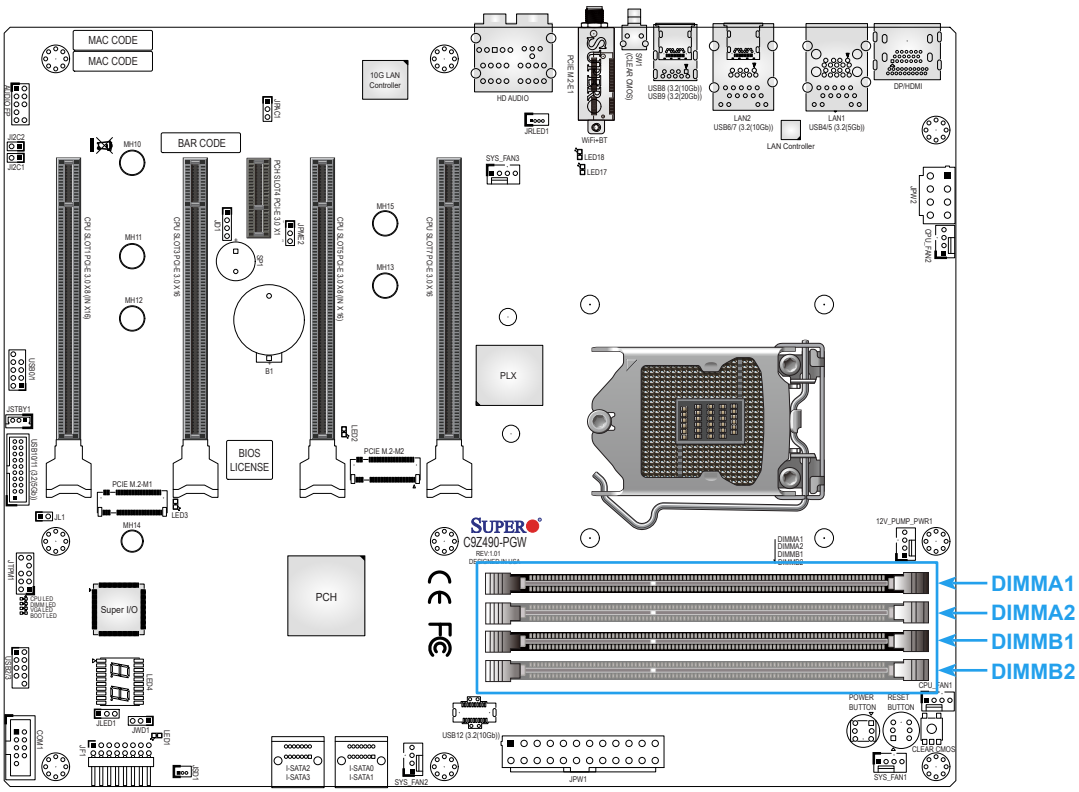

DIMM Installation

1. Insert DIMM modules in the following rder: DIMMA2, DIMMB2, then DIMMA1, DIMMB1. For the system to work properly, use memory modules of the same type and speed.

2. Align the DIMM module key with the receptive point on the single-latch DIMM slot.

3. Push the release tab outwards to unlock the slot.

4. Align the notch on the end of the module against the receptive point on the end of the slot.

5. Press both ends of the module straight down into the slot until the module snaps into place.

6. Push the release tab to the lock position to secure the module into the slot.

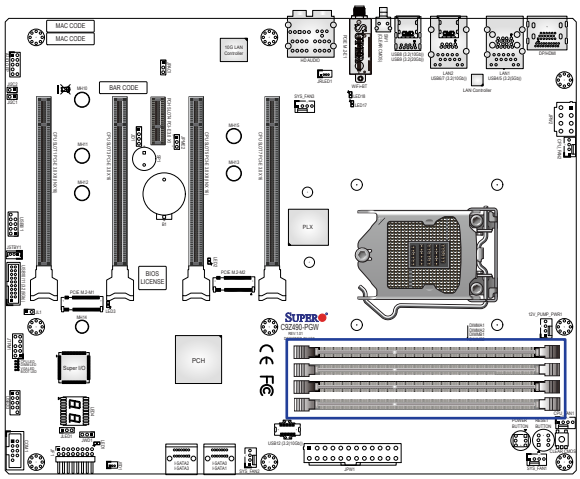

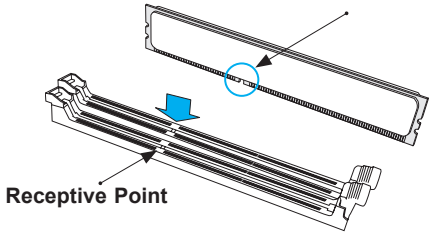

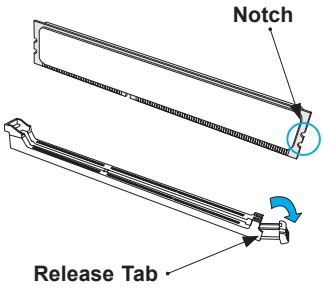

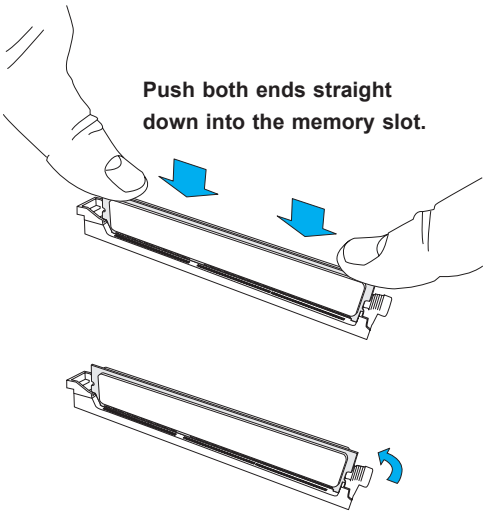

DIMM Removal

Reverse the steps above to remove the DIMM modules from the motherboard.

2.5 M.2 Installation (optional)

Two M.2 M key sockets are supported by the C9Z490-PG/-PGW. M.2 devices are used for solid state storage and internal expansion. Follow the steps below in order to install an M.2 device.

1. Locate and remove the retaining screws on the M.2 heatsinks.

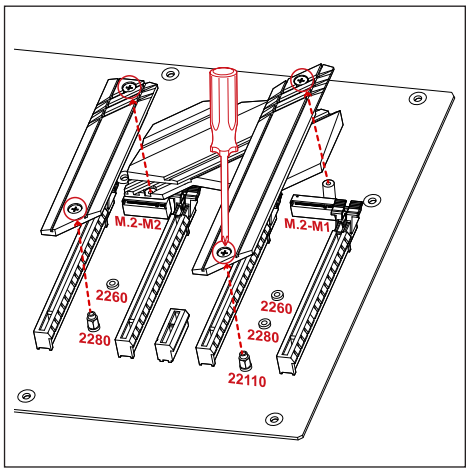

2. With the heatsink removed, locate the bundled standoff depends on the length of M.2 device if necessary.

   Note: Two standoffs have been pre-installed in the 2280 and 22110 mounting holes and designed for the heatsink installation. To plug the smaller M.2 device, please using other standoff bundled in the motherboard package.

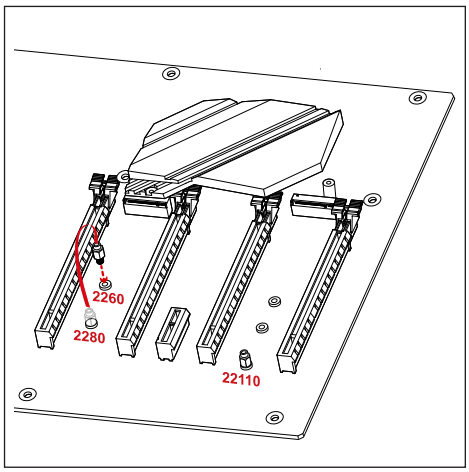

3. Carefully plug the M.2 device into the M.2 socket and lower the semi-circle notched end onto the standoff.

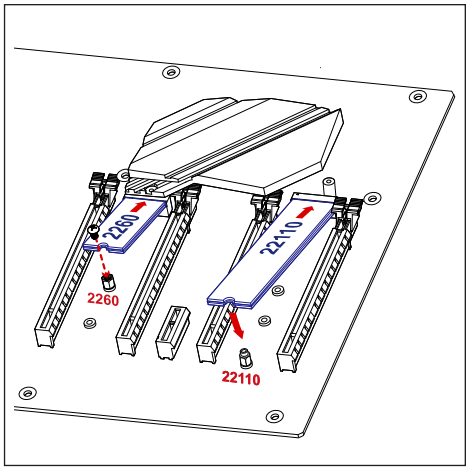

4. Remove the M.2 heatsink thermal pad cover.

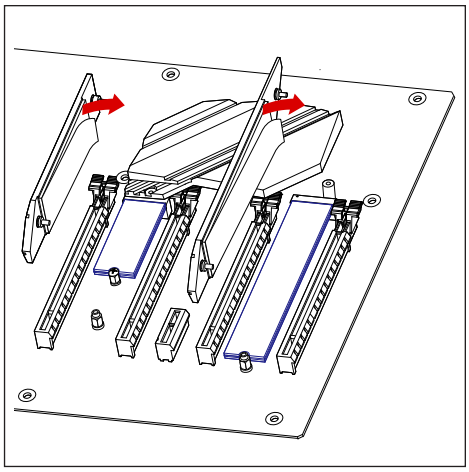

5. Replace the M.2 heatsink and the retaining screws. Tighten the screws to secure the heatsink into place.

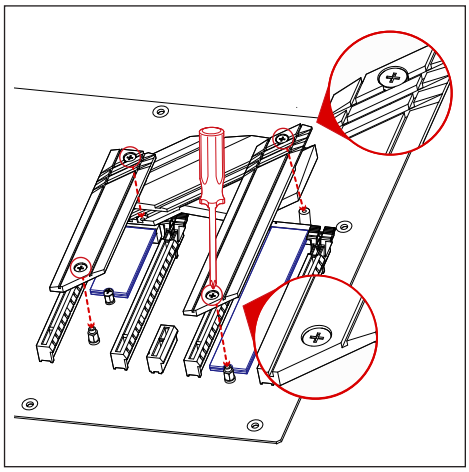

Notes:

1. **DO NOT** install the bounded M.2 heatsink (refer to step 4 and 5) if the M.2 device has a heatsink installed.

2. Please assemble the M.2 heatsink back to the motherboard once the M.2 device has been removed.

3. Beware of the direction when assembling the heatsink (refer to step 5).

2.6 Rear I/O Ports

Refer to Figure 2-1 below for the locations and descriptions of the various I/O ports on the rear of the motherboard.

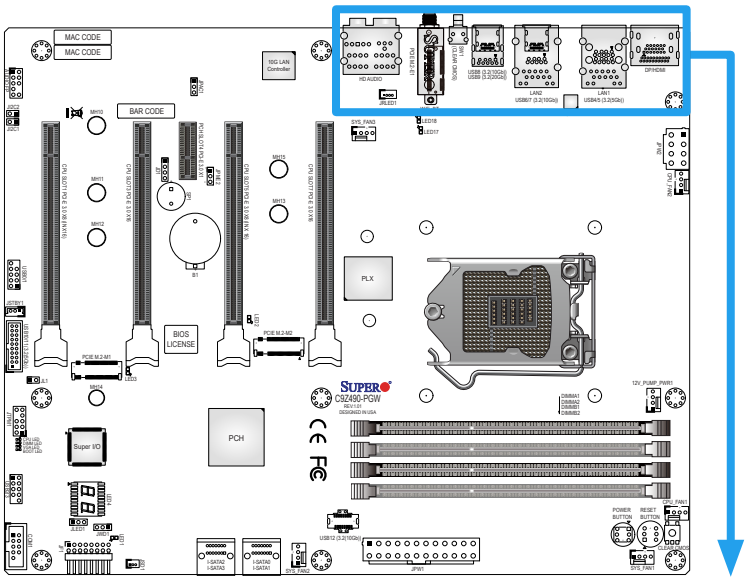

Figure 2-1. I/O Port Locations and Definitions

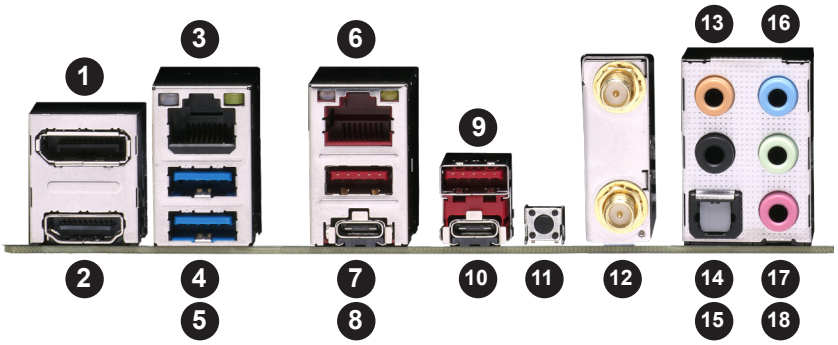

Rear I/O Ports			
#	Description	#	Description
1	DisplayPort	10	USB9: USB 3.2 Gen 2x2 (Type C)
2	HDMI Port	11	SW1: CLEAR CMOS
3	Ethernet RJ45 10GbE Port 1	12	WiFi+BT (C9Z490-PGW only)
4	USB4: USB 3.2 Gen 1 (Type A)	13	Center/LFE Out
5	USB5: USB 3.2 Gen 1 (Type A)	14	Surround Out
6	Ethernet RJ45 1GbE Port 2	15	S/PDIF Out
7	USB6: USB 3.2 Gen 2 (Type A)	16	Line In
8	USB7: USB 3.2 Gen 2 (Type C)	17	Line Out
9	USB8: USB 3.2 Gen 2 (Type A)	18	Mic In

Universal Serial Bus (USB) Ports

Two USB 3.2 Gen 1 Type A ports (USB4/5), two USB 3.2 Gen 2 Type A ports (USB6/8), one USB 3.2 Gen 2 Type C port (USB7), and one USB 3.2 Gen 2x2 Type C port (USB9) are located on the I/O back panel. In addition, four front panel USB 2.0 headers (USB0/1, 2/3), one USB 3.2 Gen 1 header (USB10/11), and one USB 3.2 Gen 2 20-pin connector (USB12) are also located on the motherboard to provide front chassis access using USB cables (not included). Refer to the tables below for pin definitions.

Front Panel USB0/1, 2/3 (2.0) Pin Definitions

Pin#	Definition	Pin#	Definition
1	+5V	2	+5V
3	USB_PN2	4	USB_PN3
5	USB_PP2	6	USB_PP3
7	Ground	8	Ground
9	Key	10	Ground

Front Panel USB10/11 (3.2 Gen 1) Pin Definitions

Pin#	Pin#	Signal Name	Description
1	19	VBUS	Power
2	18	StdA_SSRX-	USB 2.0 Differential Pair
3	17	StdA_SSRX+	
4	13	Ground	Ground of PWR Return
5	15	StdA_SSTX-	SuperSpeed Receiver
6	14	StdA_SSTX+	Differential Pair
7	16	GND_DRAIN	Ground for Signal Return
8	12	D-	SuperSpeed Transmitter
9	11	D+	Differential Pair

Front Panel USB 12 (3.2 Gen 2) Pin Definitions

Pin#	Definition	Pin#	Definition	Pin#	Definition				
1	VBUS	5	RX1+	9	NC	13	TX2-	17	GND
2	TX1+	6	RX1-	10	NC	14	GND	18	D-
3	TX1-	7	VBUS	11	VBUS	15	RX2+	19	D+
4	GND	8	CC1	12	TX2+	16	RX2-	20	CC2

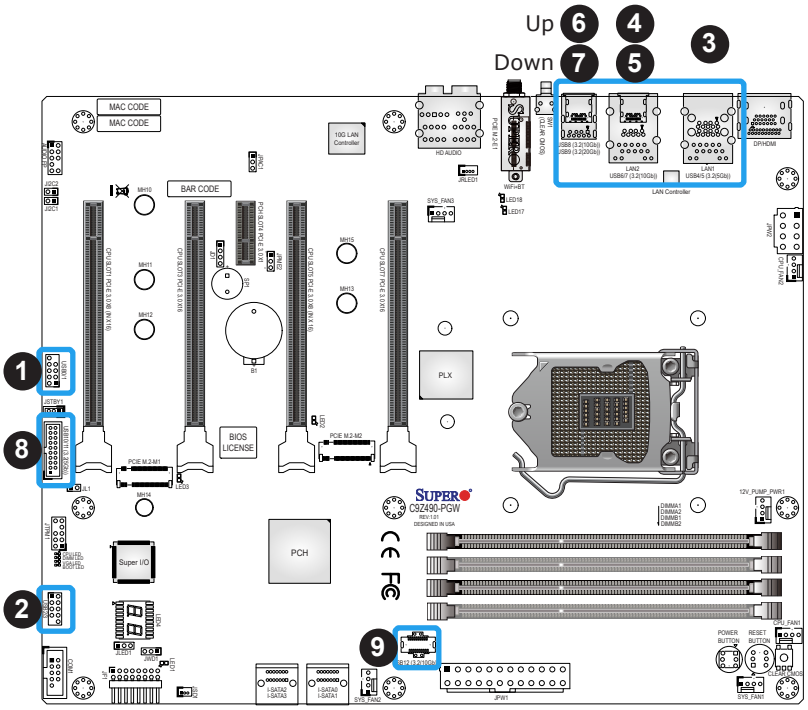

1. USB0/1 (USB 2.0)
2. USB2/3 (USB 2.0)
3. USB4/5 (USB 3.2 Gen 1)
4. USB6 (USB 3.2 Gen 2)
5. USB7 (USB 3.2 Gen 2)
6. USB8 (USB 3.2 Gen 2)
7. USB9 (USB 3.2 Gen 2x2)
8. USB10/11 (USB 3.2 Gen 1)
9. USB12 (USB 3.2 Gen 2)

Back Panel High Definition Audio (HD Audio)

This motherboard features a 7.1+2 Channel High Definition Audio (HDA) codec that provides 10 DAC channels. The HD Audio connections simultaneously supports multiple-streaming 7.1 sound playback with 2 channels of independent stereo output through the front panel stereo out for front, rear, center and subwoofer speakers. Use the Advanced software included in the CD-ROM with your motherboard to enable this function.

Audio Configuration					
		2 Channel	**4.1 Channel**	**5.1 Channel**	**7.1 Channel**
1	Orange (Center/LFE Out)			Center/Subwoofer	Center/Subwoofer
2	Black (Surround)		Rear Speaker Out	Rear Speaker Out	Rear Speaker Out
3	Light Blue (Line In/Side Speaker Out)	Line In	Line In	Line In	Side Speaker Out
4	Lime (Line Out/Front Speaker Out)	Line Out	Front Speaker Out	Front Speaker Out	Front Speaker Out
5	Pink (Mic In)	Mic In	Mic In	Mic In	Mic In

1. Center/LFE Out
2. Surround Out
3. Line In
4. Line Out
5. Mic In

DisplayPort Port

DisplayPort, developed by the VESA consortium, delivers digital display at a fast refresh rate. It can connect to virtually any display device using a DisplayPort adapter for devices, such as VGA, DVI, and HDMI.

HDMI Port

One HDMI 2.0a (High-Definition Multimedia Interface) port is located on the I/O back panel. This port is used to display both high definition video and digital sound through an HDMI capable display, using a single HDMI cable (not included).

LAN Ports

Two RJ45 Ethernet LAN ports (LAN1/LAN2) are located on the I/O back panel to provide network connections. These ports accept RJ45 type cables.

Note: Please refer to Section 2.10 for LAN LED information.

LAN1 Port Pin Definitions			
Pin#	**Definition**	**Pin#**	**Definition**
19	SGND	28	SGND
20	TD0+	29	Link 1000 LED (Yellow, +3V3SB)
21	TD0-	30	Link 100 LED (Green, +3V3SB)
22	TD1+	31	P3V3SB
23	TD1-	32	Act LED
24	TD2+	33	Ground
25	TD2-	34	Ground
26	TD3+	35	Ground
27	TD3-	36	Ground

LAN2 Port Pin Definitions			
Pin#	**Definition**	**Pin#**	**Definition**
10	SGND	19	SGND
11	TD0+	20	Link 1000 LED (Yellow, +3V3SB)
12	TD0-	21	Link 100 LED (Green, +3V3SB)
13	TD1+	22	P3V3SB
14	TD1-	23	Act LED
15	TD2+	24	Ground
16	TD2-	25	Ground
17	TD3+	26	Ground
18	TD3-	27	Ground

1. DisplayPort Port
2. HDMI Port
3. LAN1
4. LAN2

2.7 Front Control Panel

JF1 contains header pins for various buttons and indicators that are normally located on a control panel at the front of the chassis. These connectors are designed specifically for use with Supermicro chassis. Refer to the figure below for the descriptions of the front control panel buttons and LED indicators.

Note: You may connect the JF1 using the bundled S-Connector. The S-Connector is a plug designed to connect the front control panel header on the motherboard and front control panel cables of chassis. Please align the printed indications on the S-Connector with the corresponding pins on JF1 when plugging in. Refer to the checklist table in Section 1.1 and contact Supermicro for more detailed connector information.

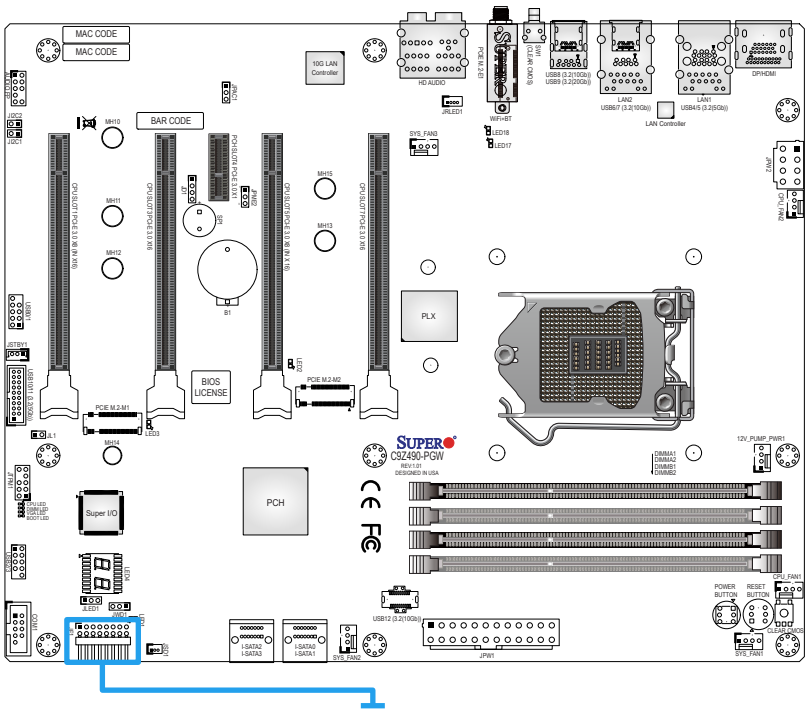

Figure 2-2. JF1 Header Pins

Power LED

The Power LED connection is located on pins 15 and 16 of JF1. Refer to the table below for pin definitions.

Power LED Pin Definitions (JF1)	
Pin#	**Definition**
15	Power LED
16	Vcc

HDD LED

The HDD LED connection is located on pins 13 and 14 of JF1. Attach a cable here to indicate the status of HDD-related activities, including IDE and SATA activities. Refer to the table below for pin definitions.

HDD LED Pin Definitions (JF1)	
Pin#	**Definition**
13	HDD LED
14	Vcc

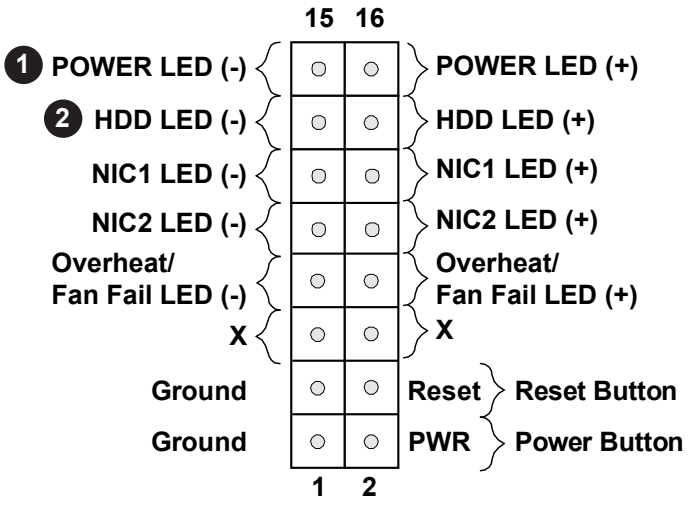

1. Power LED
2. HDD LED

NIC1/NIC2 (LAN1/LAN2) LED

The NIC (Network Interface Controller) LED connection for LAN1/LAN2 is located on pins 9/11 and 10/12 of JF1. Attach an LED indicator to this header to display network activity. Refer to the table below for pin definitions.

NIC1/NIC2 LED Pin Definitions (JF1)	
Pin#	**Definition**
9/11	NIC2/NIC1 LED
10/12	Vcc

Overheat (OH)/Fan Fail LED

Connect an LED cable to OH/Fan Fail connections on pins 7 and 8 of JF1 to provide warnings for chassis overheat/fan failure. Refer to the tables below for pin definitions.

OH/Fan Fail LED Pin Definitions (JF1)	
Pin#	**Definition**
7	OH/Fan Fail LED
8	Vcc

OH/Fan Fail Indicator Pin Definitions (JF1)	
State	**Definition**
Off	Normal
On	Overheat
Flashing	Fan Fail

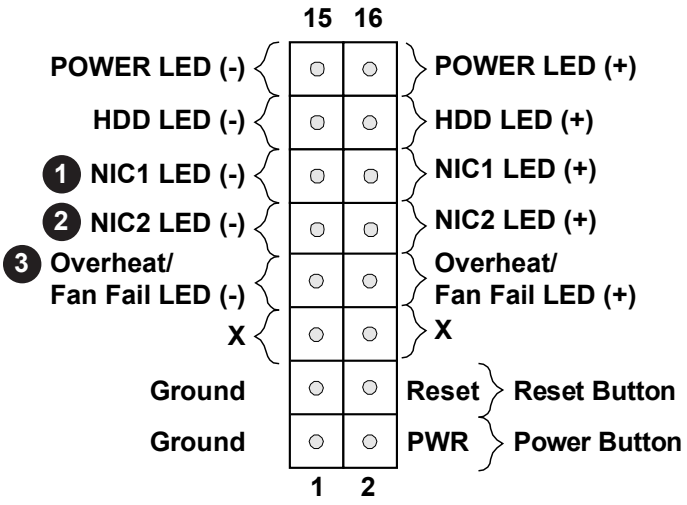

1. NIC1 LED
2. NIC2 LED
3. OH/Fan Fail LED

Reset Button

The Reset Button connection is located on pins 3 and 4 of JF1. Attach it to a hardware reset switch on the computer case to reset the system. Refer to the table below for pin definitions.

Reset Button Pin Definitions (JF1)	
Pin#	**Definition**
3	Ground
4	Reset Button

Power Button

The Power Button connection is located on pins 1 and 2 of JF1. Momentarily contacting both pins will power on/off the system. To turn off the power in the suspend mode, press the button for at least four seconds. Refer to the table below for pin definitions.

Power Button Pin Definitions (JF1)	
Pin#	**Definition**
1	Ground
2	Power Button

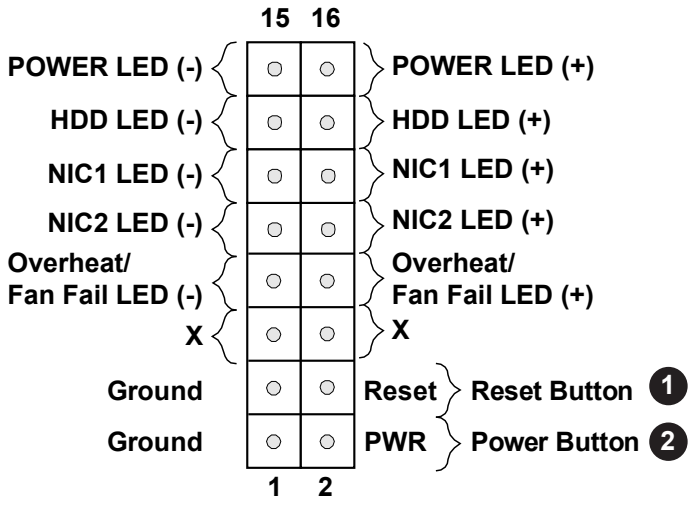

1. Reset Button
2. Power Button

2.8 Connectors

This section provides brief descriptions and pinout definitions for onboard headers and connectors. Be sure to use the correct cable for each header or connector.

Power Connections

ATX Power Supply Connector

The 24-pin power supply connector (JPW1) meets the ATX SSI EPS 12V specification. You must also connect the 8-pin (JPW2) processor power connector to the power supply.

ATX Power 24-pin Connector Pin Definitions

Pin#	Definition	Pin#	Definition
13	+3.3V	1	+3.3V
14	-12V	2	+3.3V
15	Ground	3	Ground
16	PS_ON	4	+5V
17	Ground	5	Ground
18	Ground	6	+5V
19	Ground	7	Ground
20	Res (NC)	8	PWR_OK
21	+5V	9	5VSB
22	+5V	10	+12V
23	+5V	11	+12V
24	Ground	12	+3.3V

Required Connection

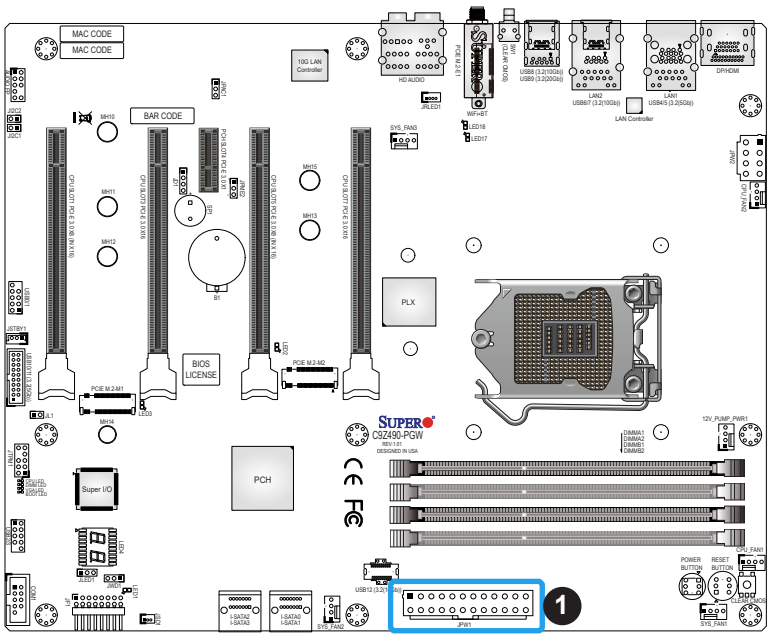

1. JPW1

8-Pin Power Connector

JPW2 is an 8-pin 12V DC power input for the CPU that must be connected to the power supply. Refer to the table below for pin definitions.

8-pin Power Pin Definitions	
Pin#	**Definition**
1 - 4	Ground
5 - 8	+12V

Required Connection

Important: To provide adequate power supply to the motherboard, be sure to connect the 24-pin ATX PWR and the 8-pin PWR connectors to the power supply. Failure to do so may void the manufacturer warranty on your power supply and motherboard.

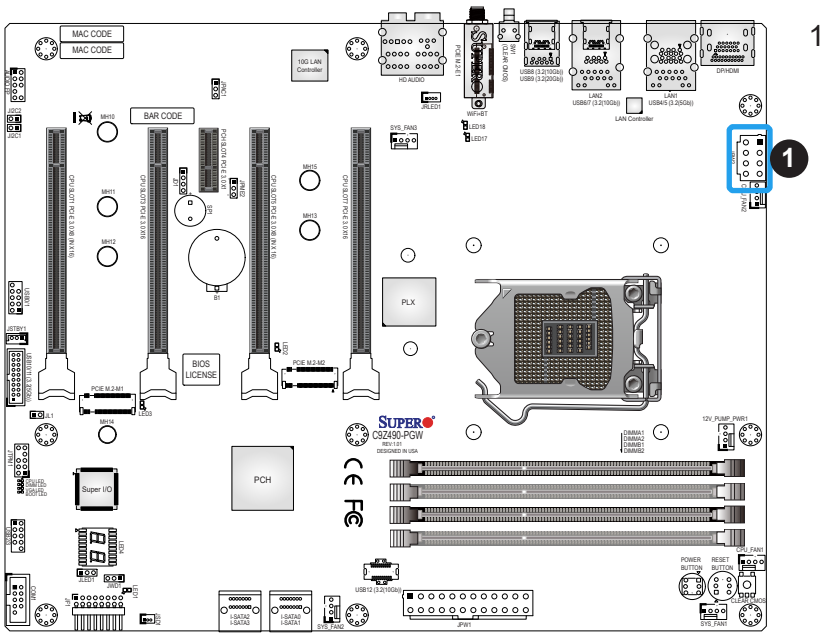

1. JPW2

Headers

Fan Headers

There are five 4-pin fan headers (CPU_FAN1 ~ CPU_FAN2, SYS_FAN1 ~ SYS_FAN3) on the motherboard. Although Pins 1-3 of the system fan headers are backwards compatible with the traditional 3-pin fans, the 4-pin fans are recommended to take advantage of the fan speed control. This allows fan speeds to be automatically adjusted based on the motherboard temperature. Refer to the table below for pin definitions.

Fan Headers Pin Definitions

Pin#	Definition
1	Ground (Black)
2	2A/+12V (Red)
3	Tachometer
4	PWM_Control

Pump Power Header

This motherboard has one +12V header for optional CPU liquid cooling systems. When using a liquid cooling system, attach the pump power cable to the 12V_PUMP_PWR1 header.

Pump Power Header Pin Definitions

Pin#	Definition
1	Ground (Black)
2	2A/+12V (Red)
3	N/A
4	N/A

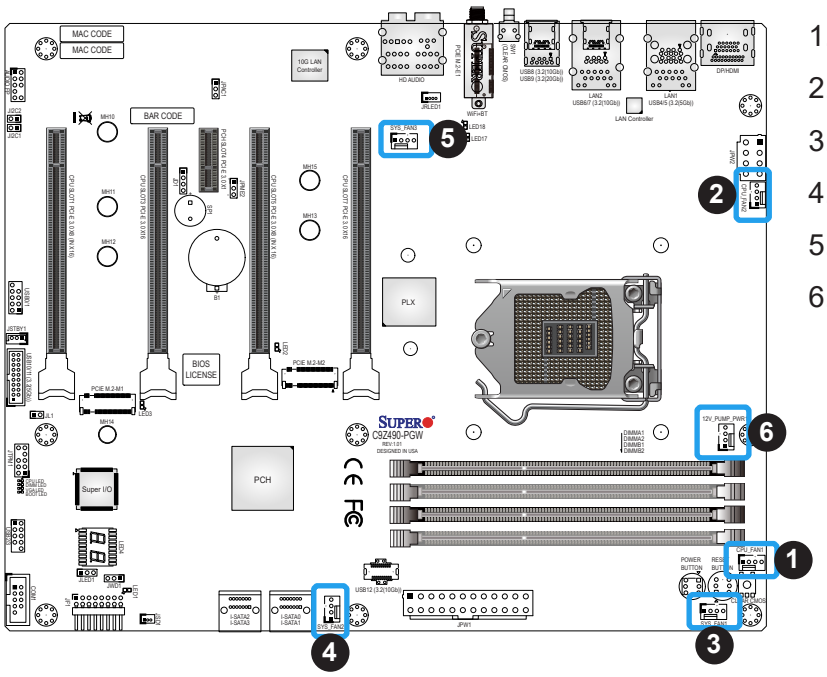

1. CPU_FAN1
2. CPU_FAN2
3. SYS_FAN1
4. SYS_FAN2
5. SYS_FAN3
6. 12V_PUMP_PWR1

Chassis Intrusion Header

A Chassis Intrusion header is located at JL1 on the motherboard. Attach the appropriate cable from the chassis to inform you of a chassis intrusion when the chassis is opened.

Chassis Intrusion Header Pin Definitions	
Pin#	**Definition**
1	Intrusion Input
2	Ground

Speaker Header

On JD1 Header, pins 3 and 4 are used for the internal speaker. Close pins 3 and 4 with a cap to use the onboard speaker. If you wish to use an external speaker, close pins 1-4 with a cable. Refer to the table below for pin definitions.

Speaker Header Pin Definitions	
Pin#	**Definition**
3-4	Internal Speaker
1-4	External Speaker

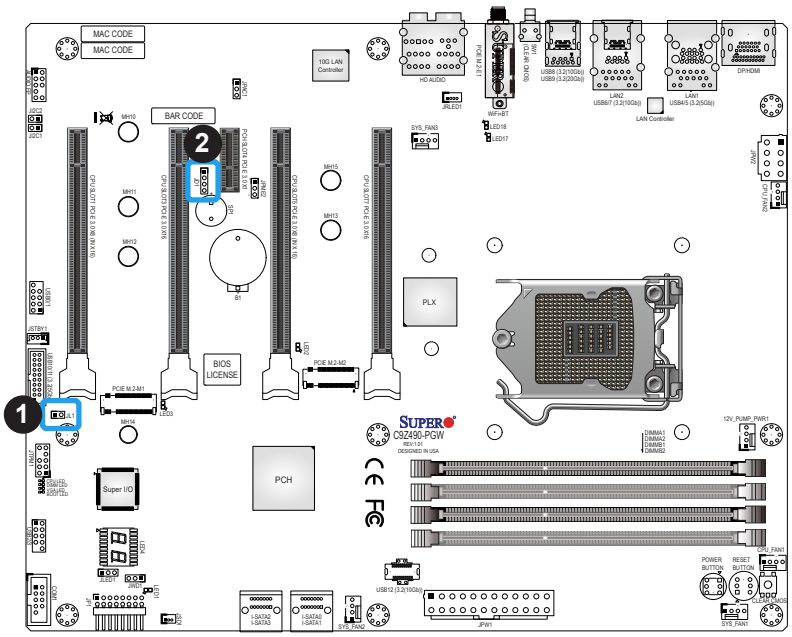

Power LED Header

An onboard Power LED header is located at JLED1. This Power LED header is connected to the Front Control Panel located at JF1 to indicate the status of system power. Refer to the table below for pin definitions.

Power LED Header Pin Definitions	
Pin#	**Definition**
1	VCC
2	Connection to PWR LED in JF1
3	Connection to PWR LED in JF1

White Light LED Header

This 4-pin connector provides the connection to white light LED board inside the I/O cover. It is located at JRLED1 on the motherboard. Refer to the table below for pin definitions.

White Light LED Header Pin Definitions	
Pin#	**Definition**
1	VCC
2	NC
3	NC
4	Ground

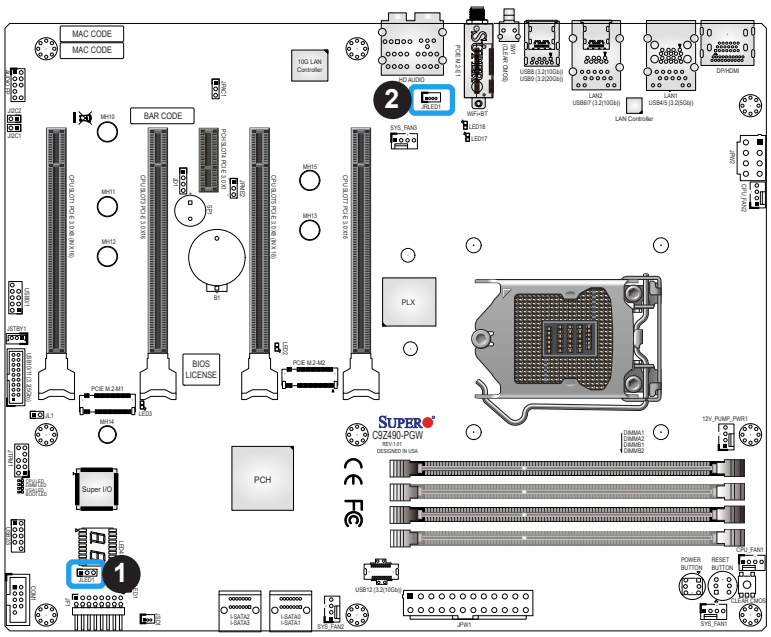

1. JLED1
2. JRLED1

DOM PWR Connector

The Disk-On-Module (DOM) power connector, located at JSD1, provides 5V power to a solid state DOM storage device connected to one of the SATA ports. Refer to the table below for pin definitions.

DOM PWR Connector Pin Definitions	
Pin#	**Definition**
1	5V
2	Ground
3	Ground

Standby Power Header

The Standby Power header is located at JSTBY1 on the motherboard. Refer to the table below for pin definitions.

Standby Power Header Pin Definitions	
Pin#	**Definition**
1	+5V Standby
2	Ground
3	Wake-up

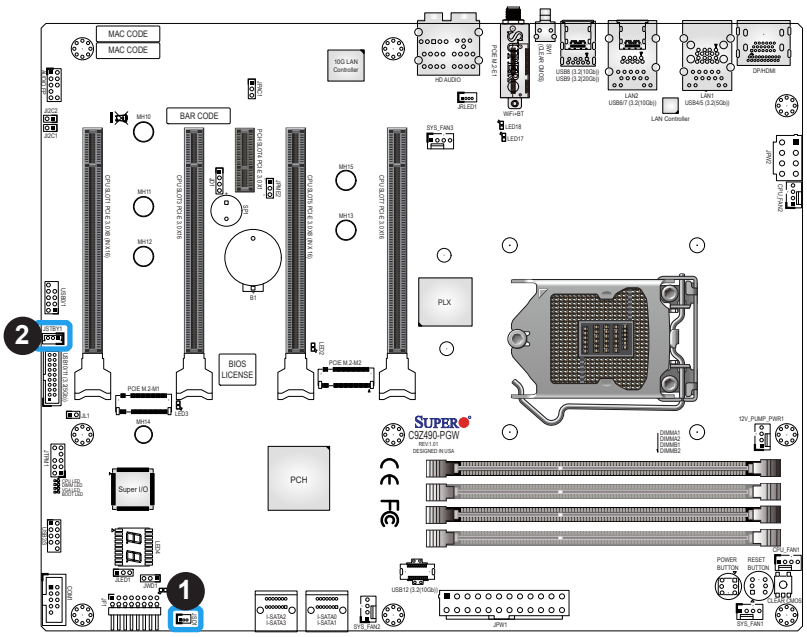

1. JSD1
2. JSTBY1

M.2 Sockets

M.2 sockets are designed for devices such as memory cards, wireless adapters, etc. These devices must conform to the PCI-E M.2 specifications (formerly known as NGFF).

Note: PCIE M.2-M1 and PCIE M.2-M2 support RAID 0 and RAID 1.

SATA Ports

Four Serial ATA (SATA) 3.0 connectors (I-SATA 0~3) are supported on the motherboard. These I-SATA 3.0 ports are supported by the Intel Z490 PCH chip (supports RAID 0, 1, 5, and 10). SATA ports provide serial-link signal connections, which are faster than the connections of Parallel ATA.

Note: For more information on the SATA HostRAID configuration, please refer to the Intel SATA HostRAID user's guide posted on our website at https://www.supermicro.com/support/manuals/.

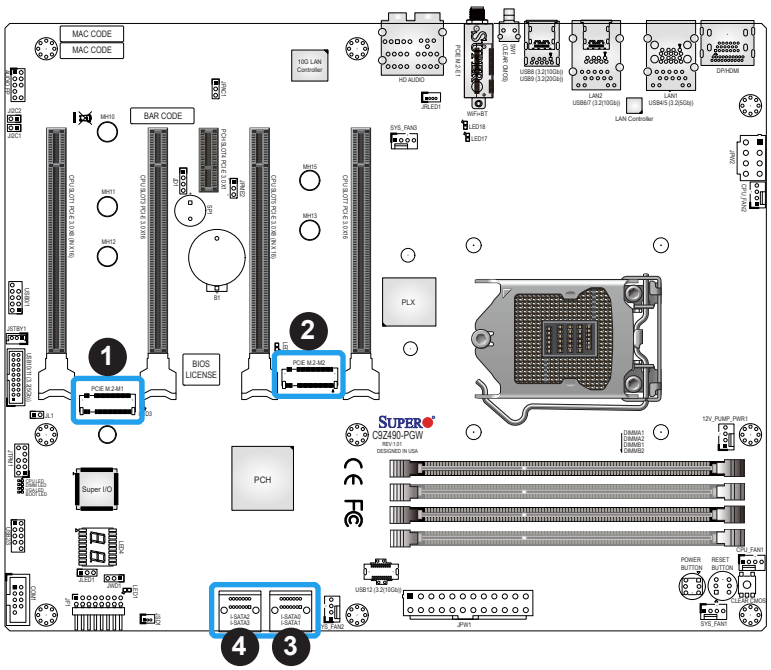

1. PCIE M.2-M1
2. PCIE M.2-M2
3. I-SATA0/I-SATA01
4. I-SATA2/I-SATA03

Front Panel Audio Header

A 10-pin Audio header at AUDIO FP is supported on the motherboard. This header allows you to connect the motherboard to a front panel audio control panel, if needed. Connect an audio cable to the audio header to use this feature (not supplied). Refer to the table below for pin definitions.

10-Pin Audio Header Pin Definitions			
Pin#	**Definition**	**Pin#**	**Definition**
1	Microphone_Left	6	Ground
2	Audio_Ground	7	Jack_Detect
3	Microphone_Right	8	Key
4	Audio_Detect	9	Line_2_Left
5	Line_2_Right	10	Ground

Internal Speaker/Buzzer

The Internal Speaker/Buzzer (SP1) is used to provide audible indications for various beep codes. Refer to the table below for pin definitions.

Internal Buzzer Pin Definitions		
Pin#	**Definition**	
1	Pos (+)	Beep In
2	Neg (-)	Alarm Speaker

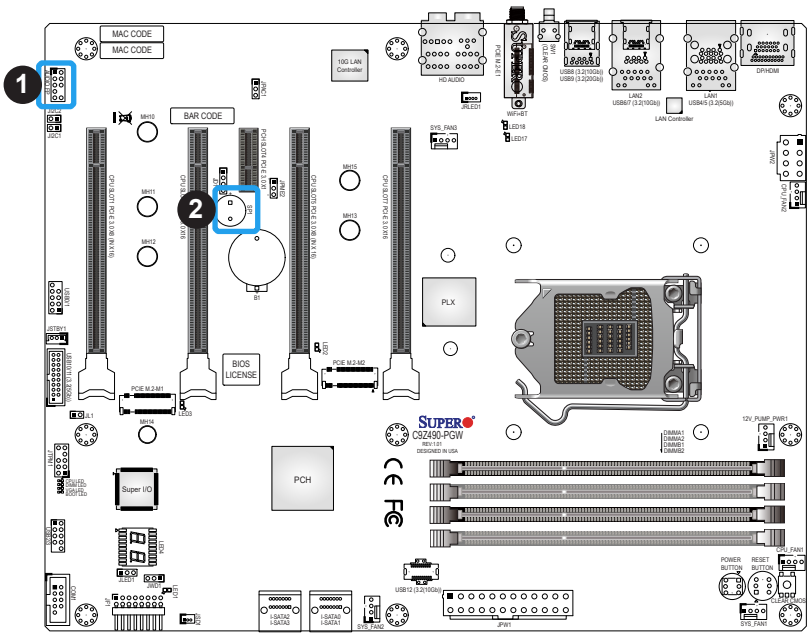

1. AUDIO FP
2. SP1

Serial (COM) Header

There is one serial (COM port) header on the motherboard. COM1 is located next to the JF1 header. Refer to the table below for pin definitions.

Serial (COM) Header Pin Definitions			
Pin#	**Definition**	**Pin#**	**Definition**
1	DCD	6	DSR
2	RXD	7	RTS
3	TXD	8	CTS
4	DTR	9	RI
5	Ground	10	N/A

TPM/Port 80 Header

A Trusted Platform Module (TPM)/Port 80 header is located at JTPM1 to provide TPM support and Port 80 connection. Use this header to enhance system performance and data security. Refer to the table below for pin definitions. Please go to the following link for more information on the TPM: http://www.supermicro.com/manuals/other/TPM.pdf.

TPM/Port 80 Header Pin Definitions			
Pin#	**Definition**	**Pin#**	**Definition**
1	P3V3	2	SPI_TPM_CS_N
3	PCIE_RESET_N	4	SPI_PCB_MISO
5	SPI_PCH_CLK	6	GND
7	SPI_PCH_MOSI	8	X
9	P3V3_STBY	10	IRQ_TPM_SPI_N

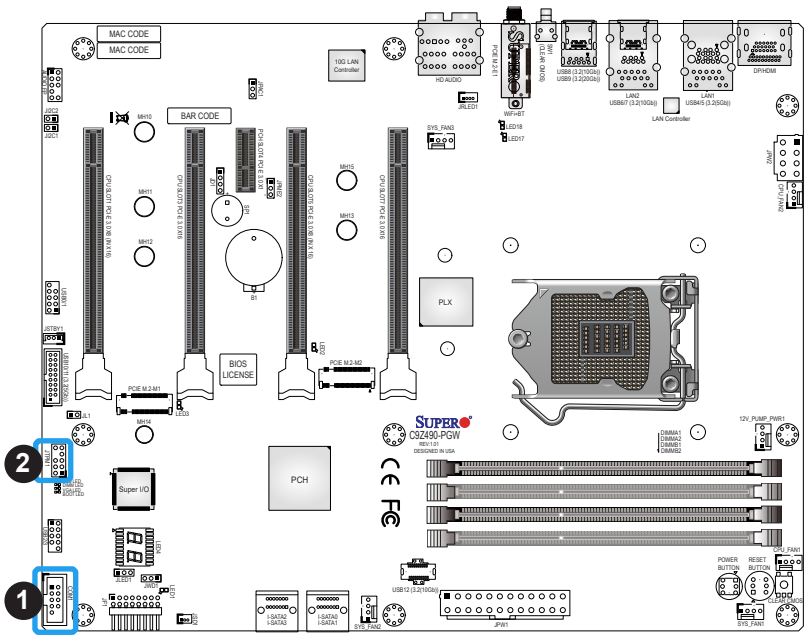

1. COM1
2. JTPM1

2.9 Jumper Settings

How Jumpers Work

To modify the operation of the motherboard, jumpers can be used to choose between optional settings. Jumpers create shorts between two pins to change the function of the connector. Pin 1 is identified with a square solder pad on the printed circuit board. Refer to the diagram below for an example of jumping pins 1 and 2. Refer to the motherboard layout page for jumper locations.

Note: On two-pin jumpers, "Closed" means the jumper is on and "Open" means the jumper is off the pins.

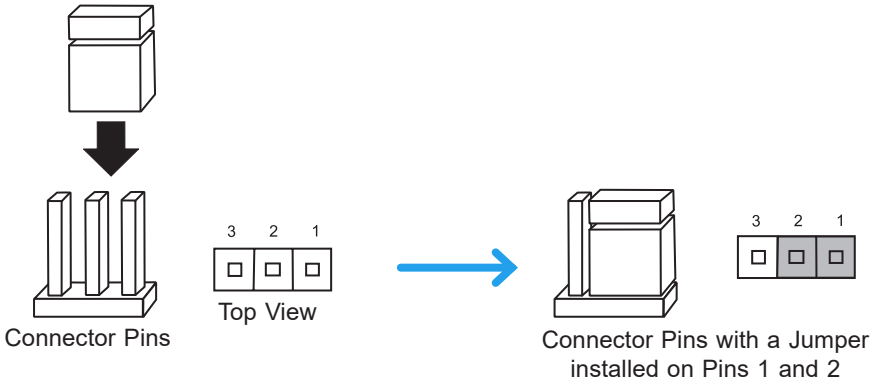

Clear CMOS/SW1 Button

Clear CMOS Button is used to clear the saved system setup configuration stored in the CMOS chip. All the settings will be erased and restored to the factory defaults after pressing this button. In this motherboard, there are two buttons which built-in this function. One is the SW1 button located on the I/O back panel and the other is the Clear CMOS button located next to the Reset Button.

Power Button

In addition to the soft power switch provided in JF1, your motherboard is equipped with a 'soft' power button on the motherboard. This switch works the same way as the soft power switch on JF1.

Reset Button

When pressed, the Reset Button will reset the system and reboot. This action will erase everything in memory and restart the system.

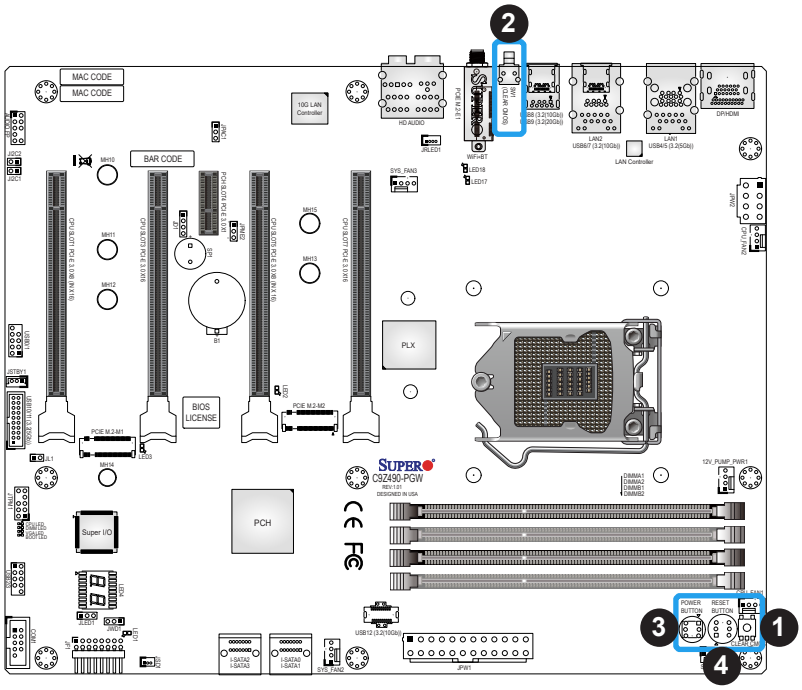

1. Clear CMOS
2. SW1
3. Power Button
4. Reset Button

Audio Enable/Disable Jumper

JPAC1 allows you to enable or disable the onboard audio support. The default position is on pins 1 and 2 to enable onboard audio connections. Refer to the table below for jumper settings.

Audio Enable/Disable Jumpers Settings	
Jumper Setting	**Definition**
Pins 1-2	Enabled (Default)
Pins 2-3	Disabled

Manufacturing Mode

Close pins 2 and 3 of Jumper JPME2 to bypass SPI flash security and force the system to operate in Manufacturing Mode, allowing the user to flash the system firmware from a host server for system setting modifications. Refer to the table below for jumper settings.

Manufacturing Mode Jumpers Settings	
Pin#	**Definition**
1-2	Normal (Default)
2-3	Manufacture Mode

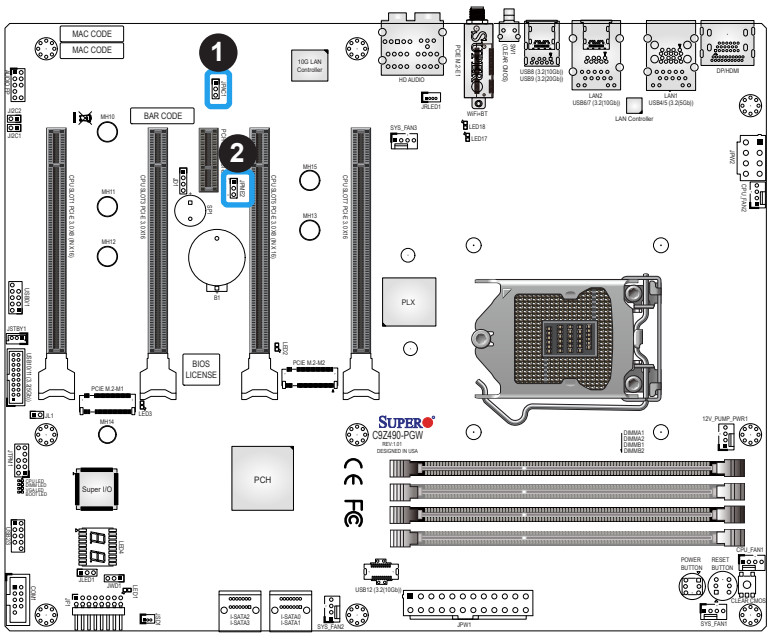

1. JPAC1
2. JPME2

PCI Slot SMB Jumpers

Use Jumpers JI2C1 and JI2C2 to enable PCI SMB (System Management Bus) support to improve system management for the PCI slots. Refer to the table below for jumper settings.

PCI Slot SMB Jumpers Settings	
Jumper Setting	**Definition**
Short	Enabled
Open (Default)	Disabled

Watch Dog

Watch Dog (JWD1) is a system monitor that can reboot the system when a software application hangs. Close pins 1 and 2 to reset the system if an application hangs. Close pins 2 and 3 to generate a non-maskable interrupt signal for the application that hangs. Refer to the table below for jumper settings.

Watch Dog Jumpers Settings	
Jumper Setting	**Definition**
Pins 1-2	Reset (Default)
Pins 2-3	NMI
Open	Disabled

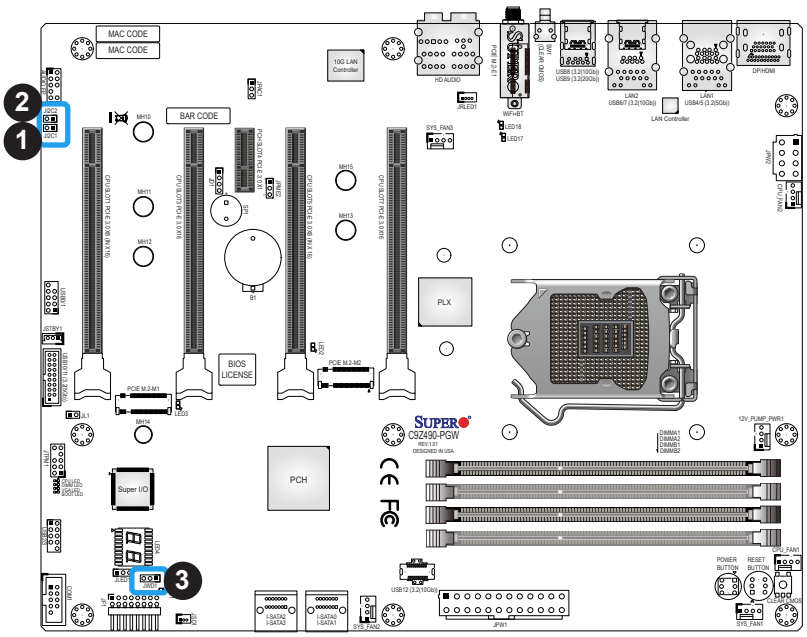

2.10 LED Indicators

LAN LEDs

Two LAN ports are located on the I/O back panel of the motherboard. This Ethernet LAN port has two LEDs (Light Emitting Diode). The yellow LED indicates activity, while the Link LED may be green, amber, or off to indicate the speed of the connections. Refer to the tables below for more information.

1G/10G LAN Activity Indicator LED Settings		
Color	**Status**	**Definition**
Yellow	Flashing	Active

1G LAN Link Indicator LED Settings	
LED Color	**Definition**
Off	No Connection
Amber	100Mbps/10Mbps
Green	1 Gbps

10G LAN Link Indicator LED Settings	
LED Color	**Definition**
Off	No Connection
Amber	5Gbps/2.5Gbps/ 1Gbps/100Mbps
Green	10 Gbps

Power LED

An Onboard Power LED is located at LED1 on the motherboard. When LED1 is on, the AC power cable is connected. Make sure to disconnect the power cable before removing or installing any component. Refer to the layout below for the LED location.

Power LED Indicator LED Status	
Status	**Definition**
Off	System Off
On	System on, or System off, and PWR Cable Connected

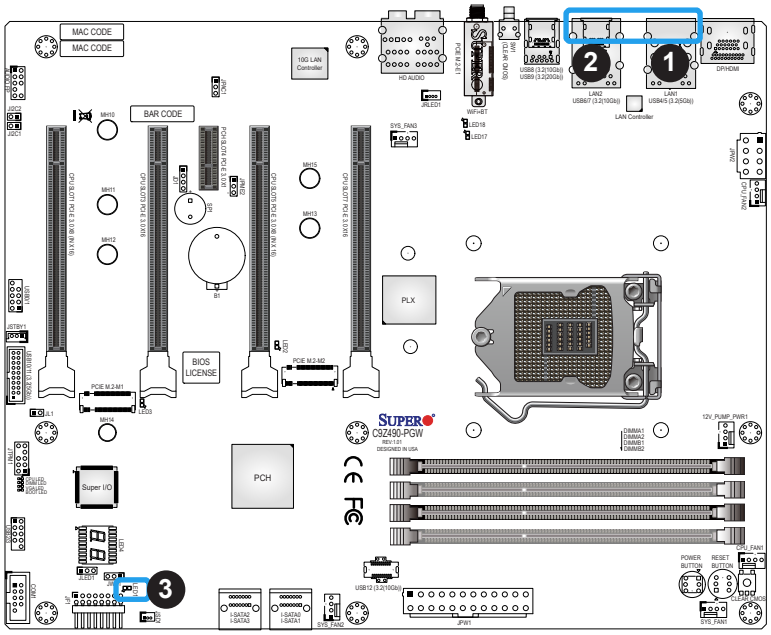

1. LAN1 LEDs
2. LAN2 LEDs
3 LED1

M.2 LED

Two M.2 LEDs are provided and indicated the status of connected M.2 devices. When a M.2 LED is blinking, it's corresponding M.2 device function normally. The LED2 is located next to the M.2 M2 socket and LED3 is next to the M.2 M1 socket on the motherboard. Refer to the table below for more information.

M.2 LED State	
LED Color	**Definition**
Green: On	Device detected
Green: Blinking	Device Working

BIOS POST Code LED

LED4 is made up of two alpha-numeric displays that will display a status or BIOS POST code, when the motherboard is powered on. For more information, refer to https://www.supermicro.com/manuals/other/AMI_AptioV_BIOS_POST_Codes_for_SM_Motherboards.pdf.

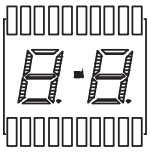

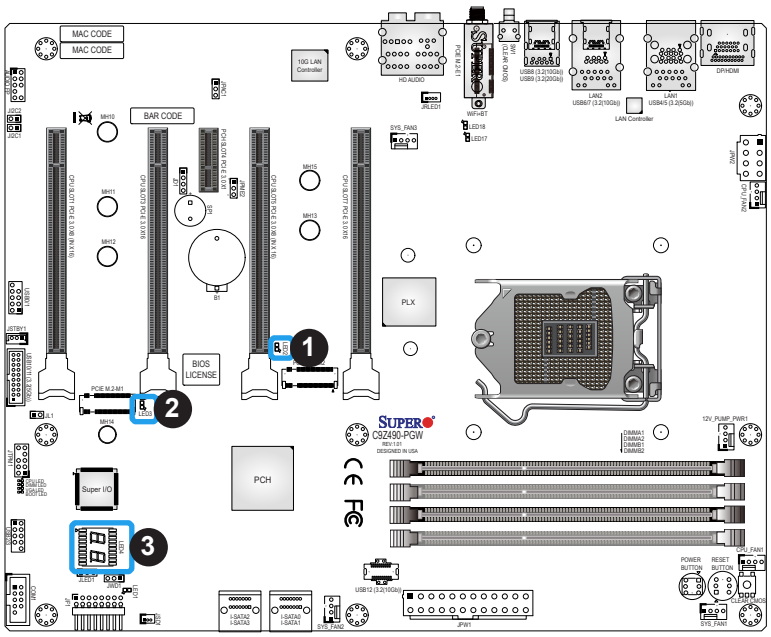

1. LED2
2. LED3
3. LED4

POST (Power-On Self-Test) LEDs

Multiple LEDs are built-in and used to display the status of system POST (Power-On Self-Test). These LEDs are located next to the JTPM1 header on the motherboard. Refer to the tables below for more information.

CPU LED State	
LED Color	**Definition**
Yellow	CPU POST Working
Off	CPU POST Completed

DIMM LED State	
LED Color	**Definition**
Blue	DIMM POST Working
Off	DIMM POST Completed

VGA LED State	
LED Color	**Definition**
Green	VGA POST Working
Off	VGA POST Completed

BOOT LED State	
LED Color	**Definition**
Orange	BOOT POST Working
Off	BOOT POST Completed

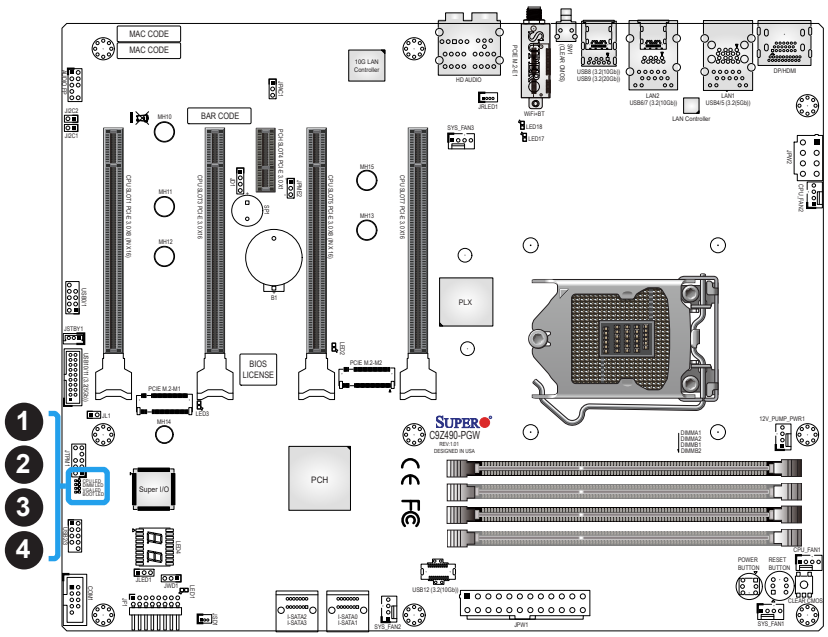

1. CPU LED
2. DIMM LED
3. VGA LED
4. BOOT LED

Chapter 3

Troubleshooting

3.1 Troubleshooting Procedures

Use the following procedures to troubleshoot your system. If you have followed all of the procedures below and still need assistance, refer to the 'Technical Support Procedures' and/or 'Returning Merchandise for Service' section(s) in this chapter. Always disconnect the AC power cord before adding, changing or installing any non hot-swap hardware components.

Before Power On

1. Make sure that there are no short circuits between the motherboard and chassis.
2. Disconnect all ribbon/wire cables from the motherboard, including those for the keyboard and mouse.
3. Remove all add-on cards.
4. Install the CPU (making sure it is fully seated) and connect the front panel connectors to the motherboard.

No Power

1. Make sure that there are no short circuits between the motherboard and the chassis.
2. Make sure that the ATX power connectors are properly connected.
3. Check that the 115V/230V switch, if available.
4. Turn the power switch on and off to test the system, if applicable.
5. The battery on your motherboard may be old. Check to verify that it still supplies ~3VDC. If it does not, replace it with a new one.

No Video

1. If the power is on, but you have no video, remove all add-on cards and cables.
2. Use the speaker to determine if any beep codes are present. Refer to Appendix A for details on beep codes.
3. Remove all memory modules and turn on the system (if the alarm is on, check the specs of memory modules, reset the memory or try a different one).

System Boot Failure

If the system does not display POST (Power-On-Self-Test) or does not respond after the power is turned on, check the following:

1. Check for any error beep from the motherboard speaker.

- If there is no error beep, try to turn on the system without DIMM modules installed. If there is still no error beep, replace the motherboard.
- If there are error beeps, clear the CMOS settings by unplugging the power cord and pressing either the SW1 button or Clear CMOS button on the motherboard. Refer to Section Clear CMOS Button in Chapter 2.

2. Remove all components from the motherboard, especially the DIMM modules. Make sure that system power is on and that memory error beeps are activated.
3. Turn on the system with only one DIMM module installed. If the system boots, check for bad DIMM modules or slots by following the Memory Errors Troubleshooting procedure in this chapter.

Memory Errors

When a no-memory beep code is issued by the system, check the following:

1. Make sure that the memory modules are compatible with the system and are properly installed. Refer to Chapter 2 for installation instructions. (For memory compatibility, refer to the "Tested Memory List" link on the motherboard's product website page to see a list of supported memory.)
2. Check if different speeds of DIMMs have been installed. It is strongly recommended that you use the same RAM type and speed for all DIMMs in the system.
3. Make sure that you are using the correct type of ECC DDR4 modules recommended by the manufacturer.
4. Check for bad DIMM modules or slots by swapping a single module among all memory slots and check the results.

Losing the System's Setup Configuration

1. Make sure that you are using a high-quality power supply. A poor-quality power supply may cause the system to lose the CMOS setup information. Refer to Section 1.6 Power Supply in Chapter 1 for details on recommended power supplies.

2. The battery on your motherboard may be old. Check to verify that it still supplies ~3VDC. If it does not, replace it with a new one.

3. If the above steps do not fix the setup configuration problem, contact your vendor for repairs.

When the System Becomes Unstable

A. If the system becomes unstable during or after OS installation, check the following:

1. CPU/BIOS support: Make sure that your CPU is supported and that you have the latest BIOS installed in your system.

2. Memory support: Make sure that the memory modules are supported by testing the modules using memtest86 or a similar utility.

   Note: Click on the "Tested Memory List" link on the motherboard's product website page to see a list of supported memory.

3. HDD support: Make sure that all hard disk drives (HDDs) work properly. Replace the bad HDDs with good ones.

4. System cooling: Check the system cooling to make sure that all heatsink fans and CPU/ system fans, etc., work properly. Also check the front panel Overheat LED and make sure that it is not on.

5. Adequate power supply: Make sure that the power supply provides adequate power to the system. Make sure that all power connectors are connected. Please refer to our website for more information on the minimum power requirements.

6. Proper software support: Make sure that the correct drivers are used.

B. If the system becomes unstable before or during OS installation, check the following:

1. Source of installation: Make sure that the devices used for installation are working properly, including boot devices such as CD/DVD.

2. Cable connection: Check to make sure that all cables are connected and working properly.

3. Using the minimum configuration for troubleshooting: Remove all unnecessary components (starting with add-on cards first), and use the minimum configuration (but with the CPU and a memory module installed) to identify the trouble areas. Refer to the steps listed in Section A above for proper troubleshooting procedures.

4. Identifying bad components by isolating them: If necessary, remove a component in question from the chassis, and test it in isolation to make sure that it works properly. Replace a bad component with a good one.

5. Check and change one component at a time instead of changing several items at the same time. This will help isolate and identify the problem.

6. To find out if a component is good, swap this component with a new one to see if the system will work properly. If so, then the old component is bad. You can also install the component in question in another system. If the new system works, the component is good and the old system has problems.

3.2 Technical Support Procedures

Before contacting Technical Support, please take the following steps. Also, please note that as a motherboard manufacturer, Supermicro also sells motherboards through its channels, so it is best to first check with your distributor or reseller for troubleshooting services. They should know of any possible problems with the specific system configuration that was sold to you.

1. Please go through the Troubleshooting Procedures and Frequently Asked Questions (FAQ) sections in this chapter or see the FAQs on our website (http://www.supermicro.com/FAQ/index.php) before contacting Technical Support.

2. BIOS upgrades can be downloaded from our website (http://www.supermicro.com/ResourceApps/BIOS_IPMI_Intel.html).

3. If you still cannot resolve the problem, include the following information when contacting Supermicro for technical support:

- Motherboard model and PCB revision number

- BIOS release date/version (This can be seen on the initial display when your system first boots up.)

- System configuration

4. An example of a Technical Support form is on our website at http://www.supermicro.com/RmaForm/.

5. Distributors: For immediate assistance, please have your account number ready when placing a call to our Technical Support department. We can be reached by email at support@supermicro.com.

3.3 Frequently Asked Questions

Question: What type of memory does my motherboard support?

Answer: The motherboard supports non ECC U-DIMM modules. To enhance memory performance, do not mix memory modules of different speeds and sizes. Please follow all memory installation instructions given on Section 2.4 in Chapter 2.

Question: How do I update my BIOS under UEFI Shell?

Answer: It is recommended that you do not upgrade your BIOS if you are not experiencing any problems with your system. Updated BIOS files are located on our website at http://www.supermicro.com/ResourceApps/BIOS_IPMI_Intel.html. Please check our BIOS warning message and the information on how to update your BIOS on our website. Select your motherboard model and download the BIOS file to your computer. Also, check the current BIOS revision to make sure that it is newer than your BIOS before downloading. To update your BIOS under the UEFI shell, please unzip the BIOS file onto a USB device formatted with the FAT/FAT32 file system. When the UEFI shell prompt appears, type fs# to change the device directory path. Go to the directory that contains the BIOS package you extracted earlier. Enter flash.nsh BIOSname#.### at the prompt to start the BIOS update process. Reboot the system when you see the message that BIOS update has completed. Refer to Appendix D UEFI BIOS Recovery and/or the readme file for more information.

Warning: Do not shut down or reset the system while updating the BIOS to prevent possible system boot failure!

Note: The SPI BIOS chip used on this motherboard cannot be removed. Send your motherboard back to our RMA Department at Supermicro for repair. For BIOS Recovery instructions, please refer to the AMI BIOS Recovery Instructions posted at http://www.supermicro.com/support/manuals/.

3.4 Battery Removal and Installation

Battery Removal

To remove the onboard battery, follow the steps below:

1. Power off your system and unplug your power cable.
2. Locate the onboard battery as shown below.
3. Using a tool such as a pen or a small screwdriver, push the battery lock outwards to unlock it. Once unlocked, the battery will pop out from the holder.
4. Remove the battery.

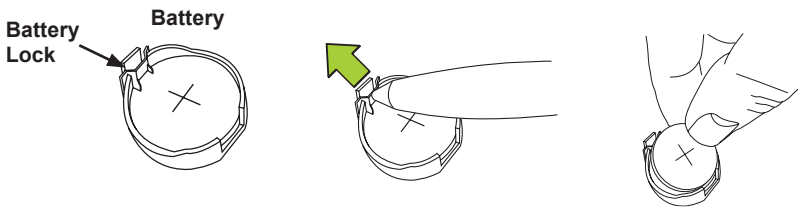

Proper Battery Disposal

Warning: Please handle used batteries carefully. Do not damage the battery in any way; a damaged battery may release hazardous materials into the environment. Do not discard a used battery in the garbage or a public landfill. Please comply with the regulations set up by your local hazardous waste management agency to dispose of your used battery properly.

Battery Installation

1. To install an onboard battery, follow steps 1 and 2 above and continue below:
2. Identify the battery's polarity. The positive (+) side should be facing up.
3. Insert the battery into the battery holder and push it down until you hear a click to ensure that the battery is securely locked.

Warning: When replacing a battery, be sure to only replace it with the same type.

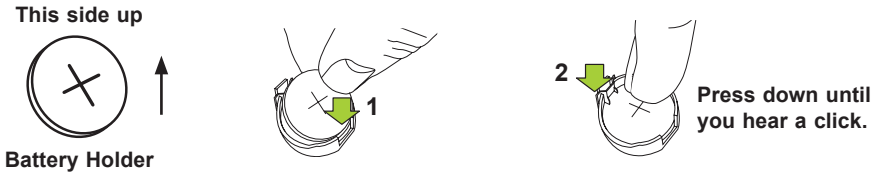

3.5 Returning Merchandise for Service

A receipt or copy of your invoice marked with the date of purchase is required before any warranty service will be rendered. You can obtain service by calling your vendor for a Returned Merchandise Authorization (RMA) number. When returning the motherboard to the manufacturer, the RMA number should be prominently displayed on the outside of the shipping carton, and the shipping package is mailed prepaid or hand-carried. Shipping and handling charges will be applied for all orders that must be mailed when service is complete. For faster service, you can also request a RMA authorization online (http://www.supermicro.com/RmaForm/).

This warranty only covers normal consumer use and does not cover damages incurred in shipping or from failure due to the alternation, misuse, abuse or improper maintenance of products.

During the warranty period, contact your distributor first for any product problems.

Chapter 4

UEFI BIOS

4.1 Introduction

This chapter describes the AMIBIOS™ Setup utility for the motherboard. The BIOS is stored on a chip and can be easily upgraded using a flash program.

Note: Due to periodic changes to the BIOS, some settings may have been added or deleted and might not yet be recorded in this manual. Please refer to the Manual Download area of our website for any changes to the BIOS that may not be reflected in this manual.

Starting the Setup Utility

To enter the BIOS Setup Utility, hit the <Delete> key while the system is booting up. (In most cases, the <Delete> key is used to invoke the BIOS setup screen. There are a few cases when other keys are used, such as <F1>, <F2>, etc.) Each main BIOS menu option is described in this manual.

Each BIOS menu option is described in this manual. The Advanced Mode BIOS Setup screen has two main areas. The top area (1) is the main Navigation, and the bottom (2) area is for the Information Section. Icons that do not respond when the mouse pointer is hovering on top are not configurable.

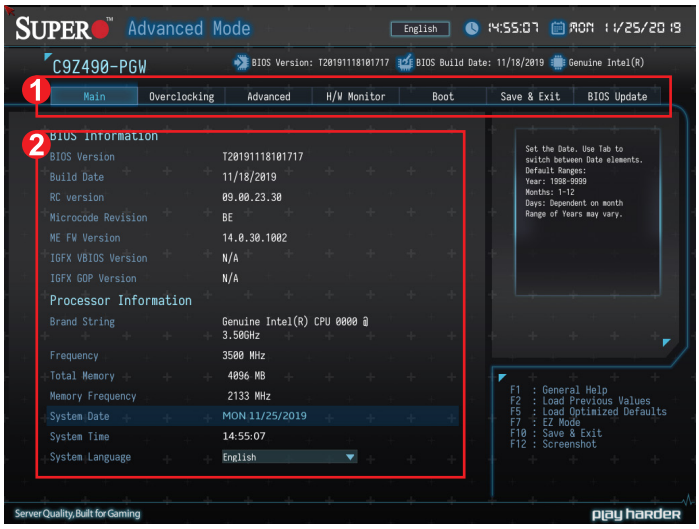

The AMI BIOS GUI Setup Utility uses a mouse pointer navigation system similar to standard graphical user interfaces. Hover and click an icon to select a section, click a down arrow to select from an options list.

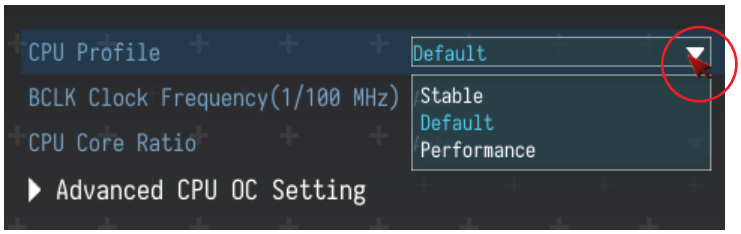

You may press the <F1> on any screen under the Setup Section to see a list of Hot Keys that are available. Press <F12> to print the screen.

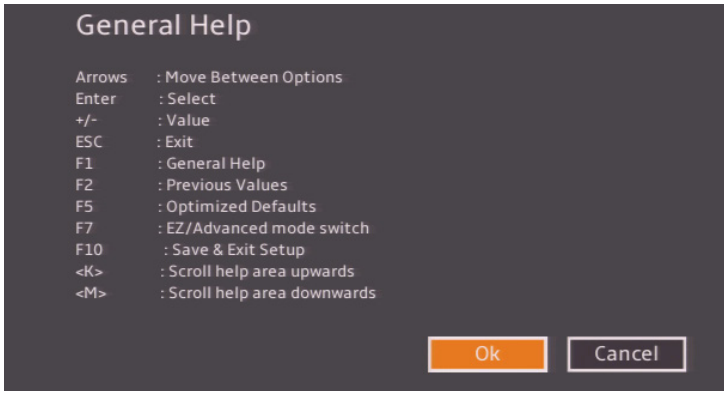

The keyboard's Escape key <ESC> cancels the current screen and will return you back to the previous screen.

Note: For AMI BIOS Recovery, please refer to the UEFI BIOS Recovery Instructions in Appendix D.

Changing Between EZ Mode and Advanced Mode

To change between EZ Mode and Advanced Mode, hit F7 on the keyboard. When in EZ Mode (refer to Section 4.2), select feature options and an overview of hardware status are displayed. When in Advanced Mode (from Section 4.3 to 4.9), all following configuration menus and their contents become available.

4.2 EZ Mode

While in EZ Mode, the following information will be displayed:

- **BIOS Version** - The current BIOS version
- **CPU Information** - The model, speed, and voltage of installed CPU
- **Memory Frequency** - The frequency of installed memory
- **System Temp** - Displays CPU and PCH temperatures
- **CPU Profile** - Allows changing of the CPU profile by clicking the left or right arrows
- **DRAM Status** - Status of all DIMM slots
- **SATA Info** - Displays which SATA ports are connected to storage devices
- **Boot Priority** - Allows changing of the boot order, or click a device to boot selected device

  Note: Using this will reboot the computer.

- **X.M.P.** - Allows changing the X.M.P. profile
- **Intel Rapid Storage Technolog**y - Allows for enabling Intel Rapid Storage Technology
- **Fan Profile** - Displays current fan speeds

4.3 Main

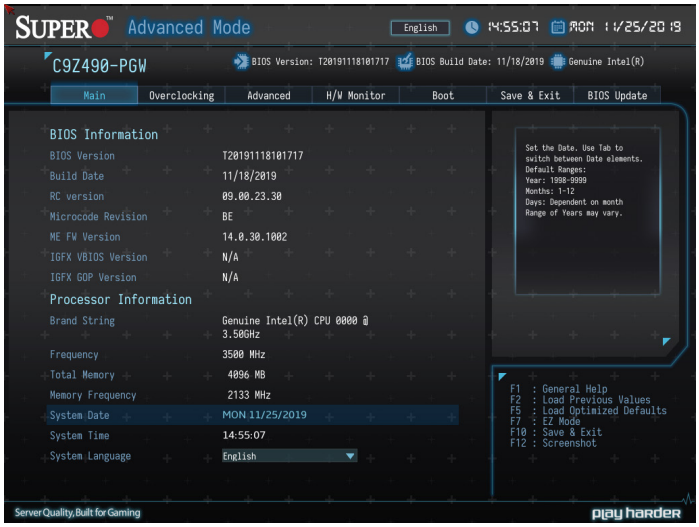

BIOS Information

The following items will be displayed:

- **BIOS Version** - This feature displays the version of the BIOS ROM used in the system.
- **Build Date** - This feature displays the date of when the BIOS ROM version used in the system was built.
- **RC Vserion** - This feature displays the memory RC version.
- **Microcode Revision** - This feature displays the CPU's microcode patch version.
- **ME FW Version** - This feature displays the ME Firmware Version.
- **IGFX VBIOS Version** - This feature displays the Integrated Graphics VBIOS version.

  Note: Invisible if the installed CPU doesn't support graphic function.
- **IGFX GOP Version** - This feature displays the Integrated Graphics GOP version.

  Note: Invisible if the installed CPU doesn't support graphic function.

Processor Information

The following items will be displayed:

- **Brand String** - This feature displays the brand, model name, model number of the CPU, and its rated clock speed.
- **Frequency** - This feature displays the detected CPU speed
- **Total Memory** - This feature displays the total size of memory available in the system.
- **Memory Frequency** - This feature displays the detected memory speed.

System Date/System Time

Use this feature to change the system date and time. Highlight **System Date** or **System Time** using the arrow keys. Enter new values using the keyboard. Press the <Tab> key or the arrow keys to move between fields. The date must be entered in MM/DD/YYYY format. The time is entered in HH:MM:SS format.

Note: The time is in the 24-hour format. For example, 5:30 P.M. appears as 17:30:00. The date's default value is the BIOS build date after RTC reset.

System Language

Use this feature to set the system language. The options are **English**, 中文(繁體), 中文(简体), 日本語, and 한국어.

4.4 Overclocking

CPU Profile

This feature allows for preset CPU overclocking profiles to be selected. The options are Stable, **Default**, and Performance.

BCLK Clock Frequency (1/100MHz)

Enter a value for the BCLK frequency. The default is **Auto**.

CPU Core Ratio

This feature determines the core ratio of CPU. The options are **Auto**, Sync All Cores, and Pre Core.

If this feature of CPU Core Ratio is set to Sync All Cores, the following feature will become available for configuration:

Core Ratio Limit0 Override

Enter a value to apply for all cores. The default is **Auto**.

If this feature of CPU Core Ratio is set to Pre Core, the following feature will become available for configuration:

Core Ratio Limit0~X Override

Set a value for each core individually. The default is **Auto**.

Note: The number of X is depending on the CPU installed on the motherboard.

▶Advanced CPU OC Setting

Processor

BCLK Aware Adaptive Voltage

This feature enables BCLK Aware Adaptive Voltage, which helps avoid high voltage overrides by forcing pcode to be aware of the BCLK frequency when making calculations. The options are Disabled and **Enabled**.

Core Max OC Ratio

This feature controls the general maximum overclocking ratio for the CPU cores and Ring. The default is **43**.

AVX2 Ratio Offset

Enter a numeric value for AVX Ratio Offset. The default is **0**.

TjMax Offset

Enter a numeric value to change the Tj-Max value. The default is **0**.

▶Config TDP Configurations

Config TDP Configurations

Configurable TDP Boot Mode

This feature sets the TDP Boot Mode to either Nominal, Down, OR Deactivated. When deactivated, it will set MSR to **Nominal** and MMIO to zero.

Configurable TDP Lock

This feature sets the lock bits on TURBO_ACTIVATION_RATIO and CONFIG_TDP_CONTROL. When CTDP lock is enabled, Custom Config TDP Count will be forced to 1 and Custom Config TDP Boot Index will be forced to 0. The options are **Disabled** and Enabled.

CTDP BIOS Control

This feature enables CTDP control via runtime ACPI BIOS methods. The options are Enabled and **Disabled**.

ConfigTDP Levels

This feature displays the level of ConfigTDP.

ConfigTDP Turbo Activation Ratio

This feature displays the value of ConfigTDP Turbo Activation Ratio.

Power Limit 1

This feature displays the value of Power Limit 1.

Power Limit 2

This feature displays the value of Power Limit 2.

Custom Settings Nominal

ConfigTDP Nominal

This feature displays the value of ConfigTDP Nominal.

Power Limit 1

Use this feature to set the power limit 1, in milliwatts. When the limit is exceeded, the CPU ratio is lowered after a period of time (refer to Power Limit 1 Time Window below). A lower limit can save power and protect the CPU, while a higher limit improves performance. This value must be between Min Power Limit TDP limit. Use the number keys on your keyboard to enter the value. The default setting is **0**.

Power Limit 2

Use this feature to set the power limit 2. Use the number keys on your keyboard to enter the value. The default setting is **0**.

Power Limit 1 Time Window

This feature determines how long the time window over which the TDP value is maintained. Use the number keys on your keyboard to enter the value. The default setting is **0**. This value may vary between 0~128.

ConfigTDP Turbo Activation Ratio

Use this feature to set the custom value for Turbo Activation Ratio. The default setting is **0**. This value should be configured from LFM to Max Turbo.

Custom Settings Down

ConfigTDP Levels

This feature displays the level of ConfigTDP.

Power Limit 1

Use this feature to set the power limit 1, in milliwatts. When the limit is exceeded, the CPU ratio is lowered after a period of time (refer to Power Limit 1 Time Window below). A lower limit can save power and protect the CPU, while a higher limit improves performance. This value must be between Min Power Limit TDP limit. Use the number keys on your keyboard to enter the value. The default setting is **0**.

Power Limit 2

Use this feature to set the power limit 2. Use the number keys on your keyboard to enter the value. The default setting is **0**.

Power Limit 1 Time Window

This feature determines how long the time window over which the TDP value is maintained. Use the number keys on your keyboard to enter the value. The default setting is **0**. This value may vary between 0~128.

ConfigTDP Turbo Activation Ratio

Use this feature to set the custom value for Turbo Activation Ratio. The default setting is **0**. This value should be configured from LFM to Max Turbo.

Thermal Voltage Boost (TVB)

TVB Ratio Clipping

This feature enables CPU core frequency reduction for processors that implement Intel Thermal Velocity Boost (TVB). For overclocking, this feature must be **Disabled**.

TVB Voltage Optimizations

This feature enables thermal base voltage optimizations for processors that implement Intel Thermal Velocity Boost (TVB). The options are Disabled and **Enabled**.

▶CPU feature

CPU Feature

Hyper-Threading

This feature enables hyper-threading, which is a software method to control logical processor threads. The options are Disabled and **Enabled**.

Pre-core HT Disable

Defines the per-core HT disable. Use the number keys on your keyboard to enter the value. The default setting is **0**.

Boot Performance Mode

This feature controls the performance state that the BIOS will set initially. The options are **Max Non-Turbo Performance** and Turbo Performance.

Intel(R) SpeedStep(tm)

Intel SpeedStep Technology allows the system to automatically adjust processor voltage and core frequency in an effort to reduce power consumption and heat dissipation. **Please refer to Intel's website for detailed information.** The options are Disabled and **Enabled**.

Race To Halt (RTH)

This feature enables Race To Halt, which dynamically increases CPU frequency in order to enter package C-State faster. This will reduce overall power consumption. The options are Disabled and **Enabled**.

Intel(R) Speed Shift Technology

This feature enables Intel Speed Shift, which allows the operating system to hand control of CPU frequency and voltage to the processor. This increases P-state change speed and improves power efficiency. The options are Disabled and **Enabled**.

C States

C-State architecture, a processor power management platform developed by Intel, can further reduce power consumption from the basic C1 (Halt State) state that blocks clock cycles to the CPU. Select Enabled for CPU C-State support. The options are Disabled and **Enabled**.

Thermal Monitor

This feature enables the CPU thermal monitor. The options are Disabled and **Enabled**.

Energy Efficient Turbo

Select Enabled to activate Energy Efficient Turbo. This feature will opportunistically lower the turbo frequency to increase efficiency. We recommend to leave this enabled and disable only in overclock-ing situations where the turbo frequency must remain constant. The options are Auto, Enabled, and **Disabled**.

▶Ring

Ring

Ring Max OC Ratio

Enter a numeric value for the maximum overclock ratio for CPU Ring. The default is **Auto**.

Ring Down Bin

This feature enables Ring Down Bin. If set to Enabled, the maximum ring ratio will not be observed. The options are Disabled and **Enabled**.

Min Ring Ratio Limit

Enter a numeric value for the minimum ratio limit for CPU Ring. The default is **Auto**.

Max Ring Ratio Limit

Enter a numeric value for the maximum ratio limit for CPU Ring. The default is **Auto**.

▶CPU VR Settings

CPU VR Settings

VR Power Delivery Design

This feature is intended for motherboard validation purposes. The specifies the CFL-S board design for VR settings override values. The default is **Auto**.

PSYS Slope

Enter a numeric value for the PSYS Slope. The range is 0-200. The default is **0**.

PSYS Offset

Enter a numeric value for the PSYS Offset. The range is 0-255. The default is **0**.

PSYS PMax Power

Enter a numeric value for the PSYS PMax Power. The range is 0-8192. The default is **0**

▶Acoustic Noise Settings

Acoustic Noise Settings

Acoustic Noise Mitigation

This feature enables Acoustic Noise Mitigation, which mitigates acoustic noise on certain CPUs when they are in deep C-states.

If the feature above is set to Enabled, the following features will become available for configuration:

Pre Wake Time / Ramp Up Time / Ramp Down Time

Enter a numeric value for the desired feature. The range is 0-255. The default is **0**.

IA VR Domain / GT VR Domain / SA VR Domain / VccIn VR Domain

Disable Fast PKG C State Ramp for IA Domain

This feature disables fast package C-state ramping in a specific domain. If set to FALSE, the selected domain will continue to fast ramp. If set to TRUE, the selected domain will disable fast ramping. The options are TRUE and **FALSE**.

Slow slew Rate for IA Domain

This feature controls the slow slew rate for a specific domain. The options are **Fast/2**, Fast/4, Fast/8, and Fast/16.

▶Core/IA VR Settings

Core/IA VR Domain

VR Config Enable

This feature enables VR Config. The options are Disabled and **Enabled**.

AC Loading

Enter a numeric value for AC Loadline. The default is **0**.

DC Loadline

Enter a numeric value for DC Loadline. The default is **0**.

PS Current Threshold1

Enter a value for PS Current Threshold1. The range is 0-512. The default is **80**.

PS Current Threshold2

Enter a value for PS Current Threshold2. The range is 0-512. The default is **20**.

PS Current Threshold3

Enter a value for PS Current Threshold3. The range is 0-512. The default is **4**.

PS3 Enable

This feature enables PS3. The options are Disabled and **Enabled**.

PS4 Enable

This feature enables PS4. The options are Disabled and **Enabled**.

IMON Slope

Enter a value for IMON Slope. The range is 0-200. The default is **0**.

IMON Offset

Enter a value for IMON Offset. The range is 0-63999. The default is **0**.

IMON Prefix

Use this feature to set the prefix value as a positive (+) or a negative (-). The options are "**+**" and "-".

VR Current Limit

Enter a value for the voltage regulator current limit, with each whole number equating to 1/4A (i.e., 400 = 100A). Enter 0 for Auto.

VR Voltage Limit

Enter a value (in mV) for the voltage regulator voltage limit. The range is 0-7999. Enter 0 for Auto.

TDC Enable

This feature enables TDC. The options are Disabled and **Enabled**.

TDC Current Limit

Enter a value for the TDC Current Limit, with each whole number equating to 1/8A (i.e., 1000 = 125A). The range is 0-32767. The default is **1056**.

TDC Time Windows

This feature controls the TDC Time Window. The options are **1 ms**, 2 ms, 3 ms, 4 ms, 5 ms, 6 ms, 7 ms, 8 ms, and 10 ms.

TDC Lock

This feature enables TDC Lock. The options are **Disabled** and Enabled.

▶GT VR Settings

GT Domain

VR Config Enable

This feature enables VR Config. The options are Disabled and **Enabled**.

AC Loading

Enter a numeric value for AC Loadline. The default is **0**.

DC Loadline

Enter a numeric value for DC Loadline. The default is **0**.

PS Current Threshold1

Enter a value for PS Current Threshold1. The range is 0-512. The default is **80**.

PS Current Threshold2

Enter a value for PS Current Threshold2. The range is 0-512. The default is **20**.

PS Current Threshold3

Enter a value for PS Current Threshold3. The range is 0-512. The default is **4**.

PS3 Enable

This feature enables PS3. The options are Disabled and **Enabled**.

PS4 Enable

This feature enables PS4. The options are Disabled and **Enabled**.

IMON Slope

Enter a value for IMON Slope. The range is 0-200. The default is **0**.

IMON Offset

Enter a value for IMON Offset. The range is 0-63999. The default is **0**.

IMON Prefix

Use this feature to set the prefix value as a positive (+) or a negative (-). The options are "**+**" and "**-**".

VR Current Limit

Enter a value for the voltage regulator current limit, with each whole number equating to 1/4A (i.e., 400 = 100A). Enter 0 for Auto.

VR Voltage Limit

Enter a value (in mV) for the voltage regulator voltage limit. The range is 0-7999. Enter 0 for Auto.

Intersil VR Command

This feature enables Intersil VR Command to fix VR C-state issues. The options are **Disabled**, Send for IA/GT rails, and Send for IA/GT/SA rails.

Thermal Voltage Boost (TVB)

TVB Ratio Clipping

This feature enables CPU core frequency reduction for processors that implement Intel Thermal Velocity Boost (TVB). For overclocking, this feature must be **Disabled**.

TVB Voltage Optimizations

This feature enables thermal base voltage optimizations for processors that implement Intel Thermal Velocity Boost (TVB). The options are Disabled and **Enabled**.

▶CPU feature

CPU Feature

Hyper-Threading

This feature enables hyper-threading, which is a software method to control logical processor threads. The options are Disabled and **Enabled**.

Pre-core HT Disable

Defines the per-core HT disable. Use the number keys on your keyboard to enter the value. The default setting is **0**.

Boot Performance Mode

This feature controls the performance state that the BIOS will set initially. The options are **Max Non-Turbo Performance** and Turbo Performance.

Intel(R) SpeedStep(tm)

Intel SpeedStep Technology allows the system to automatically adjust processor voltage and core frequency in an effort to reduce power consumption and heat dissipation. **Please refer to Intel's website for detailed information.** The options are Disabled and **Enabled**.

Race To Halt (RTH)

This feature enables Race To Halt, which dynamically increases CPU frequency in order to enter package C-State faster. This will reduce overall power consumption. The options are Disabled and **Enable**d.

Intel(R) Speed Shift Technology

This feature enables Intel Speed Shift, which allows the operating system to hand control of CPU frequency and voltage to the processor. This increases P-state change speed and improves power efficiency. The options are Disabled and **Enabled**.

Intel(R) Turbo Boost Max Technology 3.0

Select Enabled to use the Intel Turbo Boost Max Technology. The options are Disabled and **Enabled**.

C States

C-State architecture, a processor power management platform developed by Intel, can further reduce power consumption from the basic C1 (Halt State) state that blocks clock cycles to the CPU. Select Enabled for CPU C-State support. The options are Disabled and **Enabled**.

Thermal Monitor

This feature enables the CPU thermal monitor. The options are Disabled and **Enabled**.

Energy Efficient Turbo

Select Enabled to activate Energy Efficient Turbo. This feature will opportunistically lower the turbo frequency to increase efficiency. We recommend to leave this enabled and disable only in overclock-ing situations where the turbo frequency must remain constant. The options are Auto, Enabled and **Disabled**.

Turbo Mode

Select Enabled to use the Turbo Mode to boost system performance. The options are Disabled and **Enabled**.

Note: Requires to enable the feature of Intel SpeedStep or Intel Speed Shift Technology.

▶Ring

Ring

Ring Max OC Ratio

Enter a numeric value for the maximum overclock ratio for CPU Ring. The default is **Auto**.

Ring Down Bin

This feature enables Ring Down Bin. If set to Enabled, the maximum ring ratio will not be observed. The options are Disabled and **Enabled**.

Min Ring Ratio Limit

Enter a numeric value for the minimum ratio limit for CPU Ring. The default is **Auto**.

Max Ring Ratio Limit

Enter a numeric value for the maximum ratio limit for CPU Ring. The default is **Auto**.

▶CPU VR Settings

CPU VR Settings

VR Power Delivery Design

This feature is intended for motherboard validation purposes. The specifies the CFL-S board design for VR settings override values. The default is **Auto**.

PSYS Slope

Enter a numeric value for the PSYS Slope. The range is 0-200. The default is **0**.

PSYS Offset

Enter a numeric value for the PSYS Offset. The range is 0-255. The default is **0**.

PSYS PMax Power

Enter a numeric value for the PSYS PMax Power. The range is 0-8192. The default is **0**.

▶Acoustic Noise Settings

Acoustic Noise Settings

Acoustic Noise Mitigation

This feature enables Acoustic Noise Mitigation, which mitigates acoustic noise on certain CPUs when they are in deep C-states.

If the feature of Acoustic Noise Mitigation is set to Enable, the following features will become available for configuration:

Pre Wake Time / Ramp Up Time / Ramp Down Time

Enter a numeric value for the desired feature. The range is 0-255. The default is **0**.

IA VR Domain / GT VR Domain / SA VR Domain / VccIn VR Domain

Disable Fast PKG C State Ramp for IA Domain

This feature disables fast package C-state ramping in a specific domain. If set to FALSE, the selected domain will continue to fast ramp. If set to TRUE, the selected domain will disable fast ramping. The options are TRUE and **FALSE**.

Slow slew Rate for IA Domain

This feature controls the slow slew rate for a specific domain. The options are **Fast/2**, Fast/4, Fast/8, and Fast/16.

▶Core/IA VR Settings

Core/IA VR Settings

VR Config Enable

This feature enables VR Config. The options are Disabled and **Enabled**.

AC Loading

Enter a numeric value for AC Loadline. The default is **0**.

DC Loadline

Enter a numeric value for DC Loadline. The default is **0**.

PS Current Threshold1

Enter a value for PS Current Threshold1. The range is 0-512. The default is **80**.

PS Current Threshold2

Enter a value for PS Current Threshold2. The range is 0-512. The default is **20**.

PS Current Threshold3

Enter a value for PS Current Threshold3. The range is 0-512. The default is **4**.

PS3 Enable

This feature enables PS3. The options are Disabled and **Enabled**.

PS4 Enable

This feature enables PS4. The options are Disabled and **Enabled**.

IMON Slope

Enter a value for IMON Slope. The range is 0-200. The default is **0**.

IMON Offset

Enter a value for IMON Offset. The range is 0-63999. The default is **0**.

IMON Prefix

Use this feature to set the prefix value as a positive (+) or a negative (-). The options are "**+**" and "-".

VR Current Limit

Enter a value for the voltage regulator current limit, with each whole number equating to 1/4A (i.e., 400 = 100A). Enter 0 for Auto.

VR Voltage Limit

Enter a value (in mV) for the voltage regulator voltage limit. The range is 0-7999. Enter 0 for Auto.

TDC Enable

This feature enables TDC. The options are Disabled and **Enabled**.

TDC Current Limit

Enter a value for the TDC Current Limit, with each whole number equating to 1/8A (i.e., 1000 = 125A). The range is 0-32767. The default is **1056**.

TDC Time Windows

This feature controls the TDC Time Window. The options are **1 ms**, 2 ms, 3 ms, 4 ms, 5 ms, 6 ms, 7 ms, 8 ms, and 10 ms.

TDC Lock

This feature enables TDC Lock. The options are **Disabled** and Enabled.

▶GT VR Settings

GT Domain

VR Config Enable

This feature enables VR Config. The options are Disabled and **Enabled**.

AC Loading

Enter a numeric value for AC Loadline. The default is **0**.

DC Loadline

Enter a numeric value for DC Loadline. The default is **0**.

PS Current Threshold1

Enter a value for PS Current Threshold1. The range is 0-512. The default is **80**.

PS Current Threshold2

Enter a value for PS Current Threshold2. The range is 0-512. The default is **20**.

PS Current Threshold3

Enter a value for PS Current Threshold3. The range is 0-512. The default is **4**.

PS3 Enable

This feature enables PS3. The options are Disabled and **Enabled**.

PS4 Enable

This feature enables PS4. The options are Disabled and **Enabled**.

IMON Slope

Enter a value for IMON Slope. The range is 0-200. The default is **0**.

IMON Offset

Enter a value for IMON Offset. The range is 0-63999. The default is **0**.

IMON Prefix

Use this feature to set the prefix value as a positive (+) or a negative (-). The options are "**+**" and "-".

VR Current Limit

Enter a value for the voltage regulator current limit, with each whole number equating to 1/4A (i.e., 400 = 100A). Enter 0 for Auto.

VR Voltage Limit

Enter a value (in mV) for the voltage regulator voltage limit. The range is 0-7999. Enter 0 for Auto.

TDC Enable

This feature enables TDC. The options are Disabled and **Enabled**.

TDC Current Limit

Enter a value for the TDC Current Limit, with each whole number equating to 1/8A (i.e., 1000 = 125A). The range is 0-32767. The default is **1056**.

TDC Time Windows

This feature controls the TDC Time Window. The options are **1 ms**, 2 ms, 3 ms, 4 ms, 5 ms, 6 ms, 7 ms, 8 ms, and 10 ms.

TDC Lock

This feature enables TDC Lock. The options are **Disabled** and Enabled.

Intersil VR Command

This feature enables Intersil VR Command to fix VR C-state issues. The options are **Disabled**, Send for IA/GT rails, and Send for IA/GT/SA rails.

▶GT

GT Domain

GT OverClocking Frequency

Enter a value for the overclocked RP0 frequency (in multiples of 50 MHz) in the GT domain. The default is **0**.

GT Voltage Mode

This feature controls the voltage mode in the GT domain. The options are **Adaptive** and Override.

GT Extra Turbo Voltage

Enter a value for the extra turbo voltage (in mV) that will be applied while GT is operating in turbo mode. The default is **0**.

GT Voltage Offset

Enter a value for the offset voltage (in mV) that will be applied to the GT domain. The default is **0**.

Offset Prefix

Use this feature to set the prefix value as a positive (+) or a negative (-). The options are "**+**" and "**-**".

GT Unslice Domain

GT OverClocking Frequency

Enter a value for the overclocked RP0 frequency (in multiples of 50 MHz) in the GT Unslice domain. The default is **0**.

GT Voltage Mode

This feature controls the voltage mode in the GT Unslice domain. The options are **Adaptive** and Override.

GT Extra Turbo Voltage

Enter a value for the extra turbo voltage (in mV) that will be applied while GT is operating in turbo mode. The default is **0**.

GTU Voltage Offset

Enter a value for the offset voltage (in mV) that will be applied to the GT domain. The default is **0**.

Offset Prefix

Use this feature to set the prefix value as a positive (+) or a negative (-). The options are "**+**" and "**-**".

Memory Profile

This feature controls the memory profile. The options are **Default profile** and Custom profile.

If this feature above is set to "Custom profile", the following memory configurations become available:

Memory Reference Clock

This feature controls the memory reference clock, in MHz. The options are **133** and 100.

QCLK Odd Ratio

If set to Enabled, this feature adds the Memory Reference Clock amount to the QCLK frequency. The options are **Disabled** and Enabled.

Memory Frequency

Use this feature to set the frequency of the memory installed. The options are Auto, DDR4-1067MHz, DDR4-1333MHz, DDR4-1600MHz, DDR4-1867MHz, DDR4-2133MHz, DDR4-2400MHz, DDR4-2667MHz, DDR4-2933MHz, DDR4-3200MHz, DDR4-3467MHz, DDR4-3733MHz, DDR4-4000Hz, DDR4-4267MHz, DDR4-4533MHz, DDR4-4800MHz, DDR4-5067MHz, DDR4-5333MHz, DDR4-5600MHz, DDR4-5867MHz, DDR4-6133MHz, DDR4-6400MHz, DDR4-6667MHz, DDR4-6933MHz, DDR4-7200MHz, DDR4-7467MHz, DDR4-7733MHz, DDR4-8000MHz, and DDR4-8267MHz.

▶Advanced Memory OC Setting

The features below are available when the Memory Profile is set to Custom profile.

Processor

Realtime Memory Timing

This feature enables realtime memory timing changes to be made after MRC_DONE. The options are **Disabled** and Enabled.

tCL

This festure configures the Cas Latency Range. Enter a numeric value between 0-31. The default is **15**.

tRCD/tRP

This feature configures the RAS to CAS delay time. Enter a numeric value between 1-63. The default is **15**.

tRAS

This feature configures the Ras Active Time. Enter a numeric value between 1-64. The default is **36**.

tCWL

This feature configures the Minimum CAS Write Latency Time. Enter a numeric value between 1-20. The default is **Auto**.

tFAW

This feature configures the Minimum Four Activate Window Delay Time. Enter a numeric value between 0-63. The default is **Auto**.

tREFI

This feature configures the Maximum tREFI Time (Average Periodic Refrech Interval). Enter a numeric value between 0-65535. The default is **Auto**.

tRFC

This feature configures the Minimum Refrech Recovery Delay Time. Enter a numeric value between 0-1023. The default is **Auto**.

tRRD

This feature configures the Minimum Row Active to Row Active Delay Time. Enter a numeric value between 0-31. The default is **Auto**.

tRTP

This feature configures the Minimum Internal Read to Precharge Command Delay Time. The default is **Auto**.

tCCD_L

Enter a numeric value for desired tCCD_L. The default is **Auto**.

tWR

This festure configures the Minimum Write Recovery Time. The options are Auto, 5, 6, 7, 8, 10, 12, 14, 16, 18, 20, 22, **24**, 26, 28, 30, 32, 34, 36, 38, 40, 42 and 44.

tWTR

This feature configures the Minimum Internal Write to Read Command Delay Time. Enter a numeric value between 0-28. The default is **Auto**.

NMode

This feature configures the System Command Rate. Enter a numeric value between 0-2. The default is **Auto**.

tRRD_sg

tRRD_dg

tRDRD_sg

tRDRD_dg

tRDRD_dr

tRDRD_dd

tRDWR_sg

tRDWR_dg

tRDWR_dr

tRDWR_dd

tWRRD_sg

tWRRD_dg

tWRRD_dr

tWRRD_dd

tWRWR_sg

tWRWR_dg

tWRWR_dr

tWRWR_dd

tCKE

ODT RTT WR

ODT RTT PARK

ODT RTT NOM

SCompDq StageDelayPS

SCompCmd StageDelayPS

SCompCtl StageDelayPS

SCompClk StageDealyPS

RcompTarget[RdOdt]

RcompTarget[WrDS]

RcompTarget[WrDSCmd]

RcompTarget[WrDSCtl]

RcompTarget[WrDSClk]

DllBwEn[0]

DllBwEn[1]

DllBwEn[2]

DllBwEn[3]

Enter a desired numeric value above for each feature. The default of these features is **0**.

Load line Calibration

This feature controls the load line calibration. The options are Disabled, Level 1, Level 2, Level 3, Level 4, Level 5, Level 6, Level 7, and **Auto**.

Core Voltage Mode

This feature controls the core voltage mode. The options are **Adaptive** and Override.

VF Point Offset Mode

Use this feature to select Legacy or Selection mode. The options are Legacy and **Selection**.

If the feature above is set to Legacy, the following features will become available for configuration:

Core Voltage Offset

Enter a value for the offset voltage (in mV) that will be applied to the IA Core domain. The default is **Auto**.

Offset Prefix

Use this feature to set the prefix value as a positive (+) or a negative (-). The options are "**+**" and "**-**".

Note: If there is any change to this setting, you will need to power off and reboot the system for the change to take effect.

Core Extra Turbo Voltage

Enter a numeric value for the extra turbo voltage (in mV) that will be applied while IA Core is operating in turbo mode. The default is **Auto**.

Memory Voltage

Enter a numeric value for the memory voltage override. The default is **Auto**.

PCH Voltage

Enter a numeric value for the PCH voltage override. The default is **Auto**.

CPU_IO Voltage

Enter a numeric value for the CPU IO voltage override. The default is **Auto**.

System Agent Voltage (mV)

Enter a numeric value for the System Agent voltage (in mV). The default is **Auto**.

▶Advanced Voltage OC Setting

Voltage Configuration

VPP Voltage

CPU PLL Voltage

PCH 1.8 Voltage

VCC DMI Voltage

Vcc_ST

Vcc_PLL

Enter a desired numeric value above for each feature. The default of these features is **Auto**.

▶Uncore

Uncore

Uncore Voltage Offset

Enter a value for the offset voltage (in mV) that will be applied to the Uncore domain. The default is **0**.

Uncore Voltage Offset

Use this feature to set the prefix value as a positive (+) or a negative (-). The options are "**+**" and "**-**".

▶Voltage PLL Trim Controls

Voltage PLL Trim Controls

Core PLL Voltage Offset

GT PLL Voltage Offset

Ring PLL Voltage Offset

System Agent PLL Voltage Offset

Memory Controller PLL Voltage Offset

Enter a desired numeric value above for each feature. The range is 0-63 and the default is **0**.

4.5 Advanced

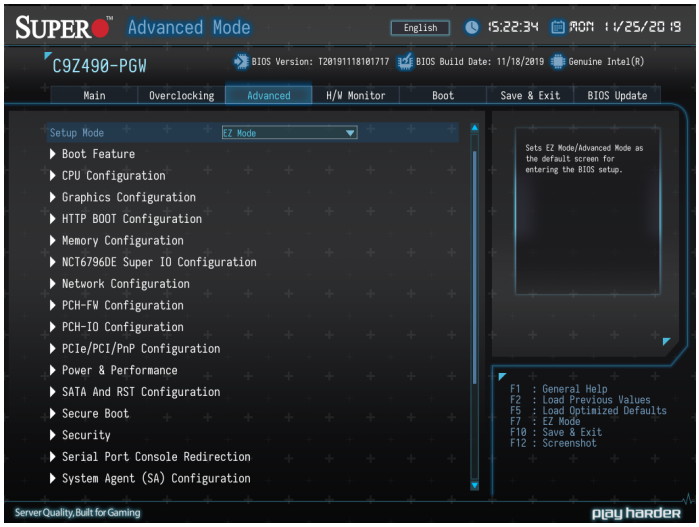

Setup Mode

This feature sets the default mode to start in after entering BIOS. The options are **EZ Mode** and Advanced Mode.

▶Boot Feature

Fast Boot

This feature enables the system to boot with a minimal set of required devices to launch. This has no effect on BBS boot options. The options are **Disabled** and Enabled.

Quiet Boot

Use this feature to select the screen display between the POST messages and the OEM logo upon bootup. Uncheck the box to display the POST messages. Check the box to display the OEM logo instead of the normal POST messages. The default is **Checked**.

Bootup NumLock State

Use this feature to set the Power-on state for the <Numlock> key. The options are Off and **On**.

Wait For "F1" If Error

Use this feature to force the system to wait until the "F1" key is pressed if an error occurs. The options are Disabled and **Enabled**.

Re-try Boot

If this feature is enabled, the BIOS will automatically reboot the system from a specified boot device after its initial boot failure. The options are **Disabled**, Legacy Boot, and EFI Boot.

Power Configuration

Watch Dog Function

If enabled, the Watch Dog Timer will allow the system to reset or generate NMI based on jumper settings when it is expired for more than five minutes. The options are **Disabled** and Enabled.

AC Loss Policy Depend on

Use this feature to set the power state after a power outage. Select Stay Off for the system power to remain off after a power loss. Select Power On for the system power to be turned on after a power loss. Select Last State to allow the system to resume its last power state before a power loss. The options are Stay Off, Power On, and **Last State**.

Power Button Function

This feature controls how the system shuts down when the power button is pressed. Select 4 Seconds Override for the user to power off the system after pressing and holding the power button for four seconds or longer. Select Instant Off to instantly power off the system as soon as the user presses the power button. The options are **Instant Off** and 4 Seconds Override.

DeepSx Power Policies

This feature enables DeepSx Power Policy configuration. The options are **Disabled** and Enabled in S4-S5.

▶Connectivity Configuration

Note: This submenu becomes configurable when a CNVi device is plugged into the motherboard. It's already built-in in C9Z490-PGW.

Connectivity Configuration

The following information will be displayed:

- **CNVi present** - display the status of wireless connection

CNVi Configuration

CNVi WiFi&BT

This feature enables CNVi WiFi and Bluetooth support. The options are Disabled and **Enabled**.

▶CPU Configuration

CPU Configuration

The following CPU information will be displayed:

- **Brand String** - the brand and speed of installed CPU
- **Frequency** - the frequency of installed CPU
- **ID** - the unique CPU ID
- **Stepping** - the processor stepping
- **Number of Processors** - the number of cores detected / the number of threads detected

Advanced Option - enabled or disabled the advanced features

If this feature of Advanced Option is set to Eabled, the following information will be displayed:

- **Microcode Revision**
- **GT Info**
- **IGFX VBSIO Version** (Invisible if the installed CPU doesn't have integrated graphics.)
- **IGFX GOP Version** (Invisible if the installed CPU doesn't have integrated graphics.)
- **L1 Data Cache**
- **L1 Instruction Cache**
- **L2 Cache**
- **L3 Cache**
- **VMX**
- **SMX/TXT**

C6DRAM

This feature enables moving DRAM contents to PRM memory when the CPU is in a C6 state. The options are Disabled and **Enabled**.

Note: This feature is available depending on the CPU.

Software Guard Extensions (SGX)

Select Enabled to activate the Software Guard Extensions (SGX). The options are Enabled, Disabled, and **Software Controlled**.

Note: This feature is available depending on the CPU.

If this feature of SGX is set to Enabled, the following features will become available for configuration:

Select Owner EPOCH Input Type

There are three Owner EPOCH modes (each EPOCH is 64 bit). The options are **No Change in Owner EPOCHs**, Change to New Random Owner EPOCH, and Manual User Defined Owner EPOCHs.

If this feature of Select Owner EPOCH Input Type is set to Manual User Defined Owner EPOCHs, the following features will become available for configuration:

Software Guard Extensions Epoch 0

Enter a numeric value for this feature. The default is **0**.

Software Guard Extensions Epoch 1

Enter a numeric value for this feature. The default is **0**.

PRMRR Size

The BIOS must reserve a contiguous region of Processor Reserved Memory (PRM) in the Processor Reserved Memory Range Register (PRMRR). The options are 32MB, 64MB, and **128MB**.

If this feature of SGX is set to Software Controlled, the following feature will become available for configuration:

Select Owner EPOCH Input Type

There are three Owner EPOCH modes (each EPOCH is 64 bit). The options are **No Change in Owner EPOCHs**, Change to New Random Owner EPOCH, and Manual User Defined Owner EPOCHs.

If this feature of Select Owner EPOCH Input Type is set to Manual User Defined Owner EPOCHs, the following features will become available for configuration:

Software Guard Extensions Epoch 0

Enter a numeric value for this feature. The default is **0**.

Software Guard Extensions Epoch 1

Enter a numeric value for this feature. The default is **0**.

Hardware Prefetcher

If set to Enabled, the hardware prefetcher will prefetch streams of data and instructions from the main memory to the L2 cache to improve CPU performance. The options are Disabled and **Enabled**.

Adjacent Cache Line Prefetch

Select Enabled for the CPU to prefetch both cache lines for 128 bytes as comprised. Select Disabled for the CPU to prefetch both cache lines for 64 bytes. The options are Disabled and **Enabled**.

Intel (VMX) Virtualization Technology

Select Enabled to use the Intel Virtualization Technology to allow one platform to run multiple operating systems and applications in independent partitions, creating multiple "virtual" systems in one physical computer. The options are Disabled and **Enabled**.

Active Processor Cores

Use this feature to select the number of active processor cores. The default option is **All**. The available options depend on how many cores are supported by the CPU.

Hyper-Threading

Select Enabled to support Intel Hyper-threading Technology to enhance CPU performance. The options are Disabled and **Enabled**.

BIST

Select Enabled to activate the Built-In Self Test (BIST) on reset. The options are **Disabled** and Enabled.

AES

Select Enabled for Intel CPU Advanced Encryption Standard (AES) In-structions support to enhance data integrity. The options are Disabled and **Enabled**.

Machine Check

Select Enabled to activate Machine Check. The options are Disabled and **Enabled**.

MonitorMWait

Select Enabled to activate MonitorMWait. The options are Disabled and **Enabled**.

Reset AUX Content

Use this feature to reset the TPM Auxiliary content. The options are Yes and **No**.

FCLK Frequency for Early Power On

Select the FCLK frequency for early power on. The options are Normal (800MHz), 1GHz, 400MHz, and **Auto**.

Note: The option of 1GHz is not supported for ULT/ULX SKUs.

▶Graphics Configuration

Graphics Configuration

Note: Only the feature of Primary Display is available for configuring if the installed CPU doesn't have integrated graphics.

Graphics Turbo IMON Current

Enter a value for the graphics turbo IMON current. The range is 14-31. The default is **31**.

Skip Scanning of External Gfx Card

This feature disables scanning for external graphics cards. When this feature is set to Enabled, the system will not scan for external graphics cards on PEG and PCH PCI-E ports. The options are **Disabled** and Enabled.

Primary Display

This feature controls which graphics device will be used as the primary display. The options are **Auto**, IGFX, PEG, and PCI.

Internal Graphics

This item keeps the IGD (Internal Graphics Device) enabled, based on setup options. The options are **Auto**, Enabled and Disabled.

GTT Size

This feature controls the memory allocation size for the graphics translation table (GTT). The options are 2MB, 4MB, and **8MB**.

Aperture Size

This feature controls the graphics aperture size. For optimal performance, select the size that matches the installed graphics card's size. The options are 128MB, **256MB**, 512MB, 1024MB, and 2048MB.

DVMT Pre-Allocated

This feature controls the DVMT 5.0 Pre-allocated graphics memory size to be used by the internal grahics device. The options are 0M, **32M**, 64M, 4M, 8M, 12M, 16M, 20M, 24M, 28M, 32M/F7, 36M, 40M, 44M, 48M, 52M, 56M, and 60M.

DVMT Total Gfx Mem

This feature controls the DVMT 5.0 total graphics size to be used by the internal graphics device. The options are 128M, **256M**, and MAX.

PM Support

This feature enables PM support. The options are Disabled and **Enabled**.

PAVP Enable

This feature enables PAVP support. The options are Disabled and **Enabled**.

Cdynmax Clamping Enable

This feature enables Cdynmax Clamping. The options are Disabled and **Enabled**.

Graphics Clock Frequency

This feature controls the graphics clock frequency. Select the highest clock frequency supported by the platform. The options are 337.5 Mhz, 450 Mhz, 540 Mhz, and **675 Mhz**.

Skip CD Clock Init in S3 resume

This feature enables skipping the full CD clock initialization. If set to Disabled, the full CD clock will initialize. The options are **Disabled** and Enabled.

▶HDD Security Configuration

HDD Security Configuration

HDD Password Configuration

Information for the following is displayed:

- **P0**
- **Security Supported**
- **Security Enabled**
- **Security Locked**
- **Security Frozen**
- **HDD User Pwd Status**
- **HDD Master Pwd Status**

▶Set User Password

Press <Enter> to create a new, or change an existing HDD password.

▶HTTP BOOT Configuration

HTTP BOOT Configuration

Http Boot One Time

This feature enables HTTP Boot, which is a client-server communication based application for system deployment and configuration over a network. The options are **Disabled** and Enabled.

Input the description

Enter a name for Http boot option.

Boot URI

Enter a value for a new Boot option to be created according to this Boot URI. The default is **Null**.

▶Memory configuration

Memory configuration

The following memory information will be displayed:

- **Memory RC Version** - displays the memory reference code version.
- **Memory Frequency** - displays the frequency of the installed memory.
- **Memory Timings (tCL-tRCD-tRP-tRAS)**
- **DIMMA1** - displays if a DIMM is installed on this slot, and the DIMM size.
- **DIMMA2** - displays if a DIMM is installed on this slot, and the DIMM size.
- **DIMMB1** - displays if a DIMM is installed on this slot, and the DIMM size.
- **DIMMB2** - displays if a DIMM is installed on this slot, and the DIMM size.

Maximum Memory Frequency

This feature selects the type/speed of the memory installed. The options are **Auto**, 1067, 1200, 1333, 1400, 1600, 1800, 1867, 2000, 2133, 2200, 2400, 2600, 2667, 2800, 2933, 3000, 3200, 3400, 3467, 3600, 3733, 3800, 4000, 4200, 4267, 4400, 4533, 4600, 4800, 5000, 5067, 5200, 5333, 5400, 5600, 5800, 5867, 6000, 6133, and 6200. All values are in MHz.

Max TOLUD (Top of Low Usable DRAM)

This feature sets the maximum TOLUD value, which specifies the "Top of Low Usable DRAM" memory space to be used by internal graphics devices, GTT Stolen Memory, and TSEG, respectively, if these devices are enabled. The options are **Dynamic**, 1 GB, 1.25 GB, 1.5 GB, 1.75 GB, 2 GB, 2.25 GB, 2.5 GB, 2.75 GB, 3 GB, 3.25 GB, and 3.5 GB.

Note: TSEG is a block of memory that is only accessible by the processor while operating in System Management Mode (SMM).

Memory Scrambler

This feature enables memory scrambler support for memory error cor-rection. The options are Disabled and **Enabled**.

Force ColdReset

Use this feature when ColdBoot is required during MRC execution. The options are **Disabled** and Enabled.

Force Single Rank

When enabled, only Rank0 will be use in each DIMM. The options are **Disabled** and Enabled.

Memory Remap

PCI memory resources will overlap with the total physical memory if 4GB of memory (or above) is installed on the motherboard. When this occurs, Enable this function to reallocate the overlapped physical memory to a location above the total physical memory to resolve the memory overlap-ping situation. The options are Disabled and **Enabled**.

MRC Fast Boot

This feature enables or disables fast path through MRC. The options are Disabled and **Enabled**.

▶NCT6796DE Super IO Configuration

NCT6796DE Super IO Configuration

- **Super IO Chip** - NCT6796DE

▶Serial Port 1 Configuration

Serial Port 1 Configuration

Serial Port

This feature will Enable or Disable Serial Port 1 (COM1). Check the box to enable Serial Port 1. The default is **Checked**.

Device Settings - IO=3F8h; IRQ=4;

Change Settings

This feature configures the IRQ setting for Serial Port 1 (COM1). The options for Serial Port 1 are **Auto**, "IO=3F8h; IRQ=4", "IO=3F8h; IRQ=3, 4, 5, 6, 7, 9, 10, 11, 12", "IO=2F8h; IRQ=3, 4, 5, 6, 7, 9, 10, 11, 12", "IO=3E8h; IRQ=3, 4, 5, 6, 7, 9, 10, 11, 12", and "IO=2E8h; IRQ=3, 4, 5, 6, 7, 9, 10, 11, 12".

▶Network Configuration

Note: This submenu becomes configurable when the Onboard LAN Support (1/2) is enabled and Onboard LAN1 Option ROM is set to EFI.

Network Configuration

▶Intel(R) Ethernet Connection (11 I219-V (XX:XX:XX:XX:XX:XX)

PORT CONFIGURATION

▶NIC Configuration

Link Speed

This feature controls the port speed used for the selected boot protocol. The options are **Auto Negotiated**, 10 Mbps Half, 10 Mbps Full, 100 Mbps Half, and 100 Mbps Full.

Wake On LAN

This feature enables the system to be powered on using an in-band packet. The options are Disabled and **Enabled**.

Blink LEDs

Use this feature to identify a physical network port. Enter a number to force the associated network port LED to blink.

PORT CONFIGURATION INFORMATION

Information for the LAN port configuration is displayed.

- **UEFI Driver**
- **Adapter PBA**
- **Chip Type**
- **PCI Device ID**
- **PCI Adress**
- **Link Status**
- **MAC Address**

▶MAC: XXXXXXXXXXXX-IPv4 Network Configuration

Configured

This feature indicates whether a network address configured successfully or not. The default is **Unchecked**.

If this feature is set to checked, the following features will become available for configuration:

Enable DHCP

Use this feature to set the DHCP. The default is **Unchecked**.

If this feature is set to Unchecked, the following features will become available for configuration:

Local IP Address - Enter an IP address in dotted-decimal notation

Local NetMask - Enter a NetMask in dotted-decimal notation

Local Gateway - Enter a Gateway in dotted-decimal notation

Local DNS Servers - Enter a DNS Servers in dotted-decimal notation

▶Save Changes and Exit

Select this feature to save the changes you've made and return to the upper configuration page.

▶MAC: XXXXXXXXXXXX-HTTP Boot Configuration

Note: This submenu becomes configurable when the IPv4 HTTP Support or IPv6 HTTP Support is set to **Enabled**.

Input the description

This feature is an input field that, when the HTTP boot option is created, can be used to enter text to describe or identify the HTTP connection.

Internet Protocol

Select the version of Internet Protocol. The options are subject to change depending on the features you enabled in IPv4 HTTP Support and IPv6 HTTP Support.

Boot URI

This feature is an input field used to enter a web or network address to point to the HTTP boot files. This supports the HTTP or HTTPS protocols only.

▶MAC: XXXXXXXXXXXX-IPv6 Network Configuration

Enter Configuration Menu

Information for the following is displayed:

- **Interface Name**
- **Interface Type**
- **MAC Address**
- **Host Addresses**
- **Route Table**
- **Gateway addresses**
- **DNS addresses**

Interface ID

Enter an ID for the device

DAD Transmit Count

Enter a value for DAD (Duplicate Adress Detection) Transmit Count. A value of zero indicates the DAD is not performed. The default is **1**.

Policy

Use this feature to set the Policy. The options are **Automatic** and Manual.

If this feature is set to Manual, the following features will become available for configuration:

▶Advanced Configuration

New IPv6 Address - Enter a new IPv6 address

New Gateway Addresses - Enter a Gateway address

New DNS Addresses - Enter a new DNS address

▶Commit Changes and Exit

Select this feature to save the changes you've made and return to the upper configuration page.

▶Discard Changes and Exit

Select this feature to discard all the changes and return to the upper configuration page.

▶Save Changes and Exit

Select this feature to save the changes you've made and return to the upper configuration page.

▶PCH-FW Configuration

Information for the following is displayed:

- **ME Firmware Version**
- **ME Firmware Mode**
- **ME Firmware SKU**

ME FW Image Re-Flash

This feature enables an update to the PCH firmware from an image in a USB flash drive attached to a USB port. The options are **Disabled** and Enabled.

▶PCH-IO Configuration

PCH-IO Configuration

HD Audio

This feature controls the detection of HD Audio devices. The options are Disabled and **Enabled**.

Wake on LAN Enable

This feature enables integrated LAN to wake the system. The options are Disabled and **Enabled**.

PCIe PLL SSC

This feature controls the PCIe PLL SSC setting. The options are **Auto** and 0.0~2.0% (in 0.1% increments).

DMI Link ASPM Control

This feature configures Active State Power Management (ASPM) for DMI Link. The options are Disabled, L0s, L1, L0sL1, and **Auto**.

PCH SLOT4 ASPM

This feature configures the ASPM (Active State Power Management) settings for PCH Slot 4. The options are Disabled, L0s, L1, L0sL1, and **Auto**.

PCH SLOT4 L1 Substates

This features configures the L1 substate for PCH Slot 4. The options are Disabled, L1.1, and **L1.1 & L1.2**.

PCIE M.2-M2 ASPM

This feature configures the ASPM (Active State Power Management) settings for M.2-M2. The options are Disabled, L0s, L1, L0sL1, and Auto.

PCIE M.2-M2 L1 Substates

This features configures the L1 substate for M.2-M2. The options are Disabled, L1.1, and **L1.1 & L1.2**.

PCIE M.2-M1 ASPM

This feature configures the ASPM (Active State Power Management) settings for M.2-M1. The options are Disabled, L0s, L1, L0sL1, and **Auto**.

PCIE M.2-M1 L1 Substates

This features configures the L1 substate for M.2-M1. The options are Disabled, L1.1, and **L1.1 & L1.2**.

▶PCIe/PCI/PnP Configuration

PCIe/PCI/PnP Configuration

CPU SLOT1 PCI-E 3.0 X8 (IN X16) OPROM
CPU SLOT3 PCI-E 3.0 X16 OPROM
PCH SLOT4 PCI-E 3.0 X1 OPROM
CPU SLOT5 PCI-E 3.0 X8 (IN X16) OPROM
CPU SLOT7 PCI-E 3.0 X16 OPROM
PCIE M.2-M1 OPROM
PCIE M.2-M2 OPROM
PCIE M.2-E1 OPROM

Select Disabled to deactivate the selected slot or EFI to activate the slot in UEFI mode. The options are Disabled, Legacy and **EFI**.

Note: These options are subject to change depending on the feature of Boot Mode Select.

Onboard LAN1 SUPPORT

Use this feature to enable the onboard LAN1 device. The options are Disabled and **Enabled**.

Onboard LAN2 SUPPORT

Use this feature to enable the onboard LAN2 device. The options are Disabled and **Enabled**.

Onboard LAN1 Option ROM

Use this feature to select a desired firmware function to be loaded for onboard LAN1. The options are Disabled, Legacy, and **EFI**.

Note: These options are subject to change depending on the feature of Boot Mode Select.

Onboard LAN2 Option ROM

Use this feature to select a desired firmware function to be loaded for onboard LAN1. The options are Disabled and **EFI**.

Note: This feature is available when the Onboard LAN1 Option ROM set to Disabled.
2. These options are subject to change depending on the feature of Boot Mode Select.

Option ROM execution

Video

This feature controls which option ROM to execute for the Video device. The options are Do Not Launch, Legacy, and **EFI**.

Note: These options are subject to change depending on the feature of Boot Mode Select.

Above 4GB MMIO BIOS Assignment

Select Enable for remapping of BIOS above 4GB. The options are Enabled and **Disabled**.

BME DMA Mitigation

Enable this feature to help block DMA attacks. The options are **Disabled** and Enabled

NVMe Firmware Source

Use this feature to select the NVMe firmware to support booting. The options are Vendor Defined Firmware and AMI Native Support. The default option, **Vendor Defined Firmware**, is pre-installed on the drive and may resolve errata or enable innovative functions for the drive. The other option, AMI Native Support, is offered by the BIOS with a generic method.

Consistent Device Name Support

Use this feature to enable device name support for onboard devices and slots. The options are **Disabled** and Enabled.

Network Stack

Select Enabled to enable PXE (Preboot Execution Environment) or UEFI (Unified Extensible Firmware Interface) for network stack support. The options are Disabled and **Enabled**.

If this feature is set to enabled, the following features will become available for configuration:

Ipv4 PXE Support

Select Enabled to enable IPv4 PXE (Preboot Execution Environment) for boot support. If this feature is set to Disabled, IPv4 PXE boot option will not be supported. The options are Disabled and **Enable**d.

Ipv4 HTTP Support

Use this feature to enable IPv4 HTTP boot support. The options are **Disabled** and Enabled.

Ipv6 PXE Support

Select Enabled to enable IPv6 PXE (Preboot Execution Environment) for boot support. If this feature is set to Disabled, IPv6 PXE boot option will not be supported. The options are Disabled and **Enabled**.

Ipv6 HTTP Support

Use this feature to enable IPv6 HTTP boot support. The options are **Disabled** and Enabled.

PXE boot wait time

Enter a value for the wait time (in seconds) to press the <ESC> key to abort the PXE boot. The default is **0**.

Media detect count

Enter a value for the number of times the presence of media will be checked. The default is **1**.

▶Power & Performance

Power & Performance

▶CPU - Power Management Control

Boot Performance Mode

This feature controls the performance state that the BIOS will set initially. The options are Max Battery, **Max Non-Turbo Performance**, and Turbo Performance.

Intel(R) SpeedStep(tm)

Intel SpeedStep Technology allows the system to automatically adjust processor voltage and core frequency in an effort to reduce power consumption and heat dissipation. Please refer to Intel's website for detailed information. The options are Disabled and **Enabled**.

C-States

C-States architecture, a processor power management platform developed by Intel, can further reduce power consumption from the basic C1 (Halt State) state that blocks clock cycles to the CPU. Select Enabled for CPU C-Sates support. The options are Disabled and **Enabled**.

If this feature is set to enabled, the following features will become available for configuration:

Enhanced C-states

This feature enables Enhanced C1 Power State to lower system energy consumption while all cores are in C-State. The options are Disabled and **Enabled**.

C-State Auto Demotion

When this feature is enabled, the CPU will conditionally demote C-State based on uncored auto-demote information. The options are Disabled, C1, C3, and **C1 and C3**.

C-State Un-demotion

When this feature is enabled, the CPU will conditionally un-demote from demoted C3 or C1. The options are Disabled, C1, C3, and **C1 and C3**.

Package C-State Demotion

This feature enables the Package C-State demotion. The options are **Disabled** and Enabled.

Package C-State Un-Demotion

When this feature is enabled, the CPU will conditionally un-demote from demoted Packaged Package C-State Un-Demotion. The options are **Disabled** and Enabled.

CState Pre-Wake

This feature enables the C-State pre wake. The options are Disabled and **Enabled**.

IO MWAIT Redirection

When enabled, this feature will map and send the I/O read instructions to the I/O registers. The options are **Disabled** and Enabled.

Package C-State Limit

Select Auto for the AMI BIOS to automatically set the limit on the C-State package register. The options are C0/C1, C2, C3, C6, C7, C7S, C8, C9, C10, CPU Default, and **Auto**.

Package C-State Workaround

This feature enables a workaround for Package C-State 6/7. The options are **Disabled** and Enabled.

▶GT - Power Management Control

Note: This submenu becomes configurable when the installed CPU has built-in integrated graphics.

GT - Power Management Control

RC6 (Render Standby)

Use this feature to enable Render Standby support. The options are **Disabled** and Enabled.

Maximum GT Frequency

This feature defines the Maximum GT Frequency. Choose between 100MHz (RPN) and 1200MHz (RP0). Any value beyond this range will be clipped to its min/max supported by the CPU. The options are **Default Max Frequency** and 100MHz~1200MHz (in increments of 50MHz).

Disable Turbo GT frequency

This feature disables Turbo GT frequency. If set to Enabled, Turbo GT frequency becomes disabled. If set to Disabled, GT frequency limiters will be removed.The options are **Disabled** and Enabled.

▶SATA And RST Configuration

SATA And RST Configuration

SATA Controller(s)

This feature enables SATA device(s). The options are Disabled and **Enabled**.

If this feature is set to Enabled, the following features will become available for configuration:

SATA Mode Selection

This feature controls SATA mode(s). The options are **AHCI** and Intel RST Premium With Intel Optane System Acceleration .

If this feature is set to Intel RST Premium With Intel Optane System Acceleration, the following features will become available for configuration:

SATA Interrupt Selection

Select which interrupt will be available to the OS. The options are **Msix**, Msi, and Legacy.

PCI-E M.2-M1/PCI-E M.2-M2

This feature appears if an M.2 device is plugged in and RAID is selected in the SATA Mode Selection feature. Use this feature to enable or disable RST PCIe storage remapping. The options are RST Controlled and **Not RST Controlled**.

Note: The feature shown here is depending on the scoket of M.2 device plugged into the motherboard.

RAID Device ID

Use this feature to select a RAID device ID. The options are **iRST Mode** and Alternate.

Storage Option ROM/UEFI Driver

This feature controls the execution of UEFI and legacy storage OpROM. The options are Do not launch, **UEFI**, and Legacy.

Teton Glacier Mode

Use this feature to select Teton Glacier Mode. The options are Dynamic Configuration for Hybrid Storage Device Enable and **Disabled**.

Note: This feature becomes configurable when the RAID Device ID is set to iRST Mode.

Aggressive LPM Support

This feature enables the PCH to aggressively enter link power state. The options are Disabled and **Enabled**.

Serial ATA Port0~3
Hot Plug

This feature designates the port specified for hot plugging. Set the setting to Enabled for hot-plugging support, which will allow the user to replace a SATA disk drive without shutting down the system. The options are Disabled and **Enabled**.

Spin Up Device

When this feature is disabled, all drives will spin up at boot. When this option is enabled, it will perform Staggered Spin Up on any drive this option is activated. The options are **Disabled** and Enabled.

SATA Device Type

Use this feature to identify the type of HDD that is connected to the SATA port. The options are **Hard Disk Drive** and Solid State Drive.

▶Secure Boot

Information for the following is displayed:

- **System Mode**
- **Secure Boot**

Attempt Secure Boot

Select Enabled for Secure Boot flow control. This feature is available when the platform key (PK) is pre-registered, the platform operates in the user mode, and CSM is disabled in the Setup utility. The options are **Disabled** and Enabled.

Secure Boot Mode

This feature allows selection of the Secure Boot Mode between Standard and Custom. Selecting Custom enables users to change the Image Execution Policy and manage Secure Boot Keys. The options are **Custom** and Standard.

CSM Support

Select enabled to support the Compatibility Support Module (CSM), which provides compatibility support for traditional legacy BIOS for system boot. The options are Disabled and **Enabled**.

If the feature of Secure Boot Mode is set to Custom, the features below will become available for configuration:

▶Enter Audit Mode

This submenu can only be used if current System Mode is set to User (refer to Exit Deployed Mode). The PK variable will be erased on transition to Audit Mode.

▶Exit Deployed Mode

Press <Enter> button to switch between Deployment and User Mode.

▶Key Management

Key Management

▶Restore Factory Keys

This feature resets the content of all UEFI Secure Boot key databases to factory defaults.

▶Reset to Setup Mode

This feature deletes the contents of all UEFI Secure Boot key databases. This will result in entering Setup Mode.

▶Export Secure Boot variables

This feature allows the user to copy NVRAM content of Secure boot variables to files in a root folder on a file system device.

▶Enroll EFI Image

This feature allows the image to run in Secure Boot Mode. Enroll SHA256 Hash Certicate of the image into the Authorized Signature Database.

Device Guard Ready

▶Remove 'UEFI CA' from DB

Use this feature to remove the Microsoft UEFI CA certificate from the database.

▶Restore DB Defaults

Select Yes to restore the DB defaults or select No to cancel.

Secure Boot Variable / Size / Keys / Key Source

▶Platform Key (PK)

This feature allows the user to configure the settings of the platform keys.

Details

Review details on current settings of the platform keys.

Export

This feature allows the user to export Platform Keys to an available file system.

Update

Select Yes to load the new Platform Keys (PK) from the manufacturer's defaults. Select No to load the Platform Keys from a file.

Delete

Select OK to confirm deletion of the Platform Key from NVRAM.

▶Key Exchange Keys

Details

Review details on current settings of the Key Exchange Keys.

Export

This feature allows the user to export Key Exchange Keys to an available file system.

Update

Select Yes to load the KEK from the manufacturer's defaults. Select No to load the KEK from a file.

Append

Select Yes to add the KEK from the manufacturer's defaults list to the existing KEK. Select No to load the KEK from a file.

Delete

Select Yes to delete the Key Exchange Keys. Select No to delete only a certificate from the key database.

▶Authorized Signatures

Details

Review details on current settings of Authorized Signatures.

Export

This feature allows the user to export Authorized Signatures to an available file system.

Update

Select Yes to load the factory default DB. Select No to load the DB from a external file.

Append

Select Yes to add the database from the manufacturer's defaults to the existing DB. Select No to load the DB from a file.

Delete

Select Yes to delete the Authorized Signatures key database. Select No to delete only a certificate from the key database.

▶Forbidden Signatures

Details

Review details on current settings of the Forbidden Signatures.

Export

This feature allows the user to export Forbidden Signatures to an available file system.

Update

Select Yes to load the DBX factory default 'dbx.' Select No to load it from an external file.

Append

Select Yes to add the DBX from the manufacturer's defaults to the existing DBX. Select No to load the DBX from a file.

Delete

Select Yes to delete the Forbidden Signatures key database. Select No to delete only a certificate from the key database.

▶Authorized TimeStamps

Details

Review details on current settings of the Authorized TimeStamps.

Export

This feature allows the user to export Authorized TimeStamps to an available file system.

Update

Select Yes to load the DBT from the manufacturer's defaults. Select No to load the DBT from a file.

Append

Select Yes to add the DBT from the manufacturer's defaults list to the existing DBT. Select No to load the DBT from a file.

Delete

Select Yes to delete the Authorized TimeStamps key database. Select No to delete only a certificate from the key database.

▶OsRecovery Signatures

Details

Review details on current settings of the Authorized TimeStamps.

Export

This feature allows the user to export Authorized TimeStamps to an available file system.

Update

Select Yes to load the DBT from the manufacturer's defaults. Select No to load the DBT from a file.

Append

Select Yes to add the DBT from the manufacturer's defaults list to the existing DBT. Select No to load the DBT from a file.

Delete

Select Yes to delete the Authorized TimeStamps key database. Select No to delete only a certificate from the key database.

▶Security

Security

Hard Drive Security Frozen

Use this feature to enable BIOS security frozen command to SATA and NVME devices. The options are **Disabled** and Enabled.

Password Check

Select Setup for the system to check for a password at Setup. Select Always for the system to check for a password at bootup or upon entering the BIOS Setup utility. The options are **Setup** and Always.

▶Administrator Password

Press <Enter> to create a new, or change an existing, Administrator password.

If the password has been created, the feature of User Password below will become available for configuration.

User Password

Press <Enter> to create a new, or change an existing, Administrator password.

▶SMC Security Erase Configuration

Note: This submenu becomes configurable when a storage device has been plugged into the motherboard.

Information for the following is displayed:

- **HDD Name**
- **HDD Serial Number**
- **Security Erase Mode**
- **Estimated Time**
- **HDD UserPwd Status**

Security Function

Use this feature to set Security Function. The options are **Disabled**, Security Erase, and Set Password.

Password

Enter a numeric value to set the password.

▶Serial Port Console Redirection

Serial Port Console Configuration

COM1

COM1 Console Redirection

Check the box to enable console redirection support for a serial port specified by the user. The options are **Unchecked** and Checked.

If the feature above is set to Checked, the following features will become available for configuration:

▶COM1 Console Redirection Settings

COM1 Console Redirection Settings

Use this feature to specify how the host computer will exchange data with the client computer, which is the remote computer used by the user.

COM1 Terminal Type

This feature allows the user to select the target terminal emulation type for Console Redirection. Select VT100 to use the ASCII Character set. Select VT100+ to add color and function key support. Select ANSI to use the Extended ASCII Character Set. Select VT-UTF8 to use UTF8 encoding to map Unicode characters into one or more bytes. The options are VT100, **VT100+**, VT-UTF8, and ANSI.

COM1 Bits Per Second

Use this feature to set the transmission speed for a serial port used in Console Redirection. Make sure that the same speed is used in the host computer and the client computer. A lower transmission speed may be required for long and busy lines. The options are 9600, 19200, 38400, 57600, and **115200** (bits per second).

COM1 Data Bits

Use this feature to set the data transmission size for Console Redirection. The options are 7 Bits and **8** Bits.

COM1 Parity

A parity bit can be sent along with regular data bits to detect data transmission errors. Select Even if the parity bit is set to 0, and the number of 1's in data bits is even. Select Odd if the parity bit is set to 0, and the number of 1's in data bits is odd. Select None if you do not want to send a parity bit with your data bits in transmission. Select Mark to add a mark as a parity bit to be sent along with the data bits. Select Space to add a Space as a parity bit to be sent with your data bits. The options are **None**, Even, Odd, Mark, and Space.

COM1 Stop Bits

A stop bit indicates the end of a serial data packet. Select 1 Stop Bit for standard serial data communication. Select 2 Stop Bits if slower devices are used. The options are **1** and 2.

COM1 Flow Control

Use this feature to set the flow control for Console Redirection to prevent data loss caused by buffer overflow. Send a "Stop" signal to stop sending data when the receiving buffer is full. Send a "Start" signal to start sending data when the receiving buffer is empty. The options are **None** and Hardware RTS/CTS.

COM1 VT-UTF8 Combo Key Support

Check the box to enable VT-UTF8 Combination Key support for ANSI/VT100 terminals. The options are Unchecked and **Checked**.

COM1 Recorder Mode

Check the box to capture the data displayed on a terminal and send it as text messages to a remote server. The options are **Unchecked** and Checked.

COM1 Resolution 100x31

Check the box to enabled for extended terminal resolution support. The options are Unchecked and **Checked**.

COM1 Putty KeyPad

This feature selects the settings for Function Keys and KeyPad used for Putty, which is a terminal emulator designed for the Windows OS. The options are **VT100**, LINUX, XTERMR6, SCO, ESCN, and VT400.

COM1 Legacy OS Redirection Resolution

Use this feature to select the number of rows and columns used in Console Redirection for legacy OS support. The options are 80x24 and **80x25**.

COM1 Redirection After BIOS POST

Use this feature to enable or disable legacy console redirection after BIOS POST. When set to Bootloader, legacy console redirection is disabled before booting the OS. When set to Always Enable, legacy console redirection remains enabled when booting the OS. The options are **Always Enable** and Bootloader.

Serial Port for Out-of-Band management/ Windows Emergency Management Services (EMS)

Console Redirection

Check the box to use a COM port selected by the user for EMS Console Redirection. The options are Enabled and **Disabled**.

If the feature above is set to Checked, the following features will become available for configuration:

▶Console Redirection Settings

Console Redirection Settings

This feature allows the user to specify how the host computer will exchange data with the client computer, which is the remote computer used by the user.

Out-of-Band Mgmt Port - COM1

Terminal Type

Use this feature to select the target terminal emulation type for Console Redirection. Select VT100 to use the ASCII character set. Select VT100+ to add color and function key support. Select ANSI to use the extended ASCII character set. Select VT-UTF8 to use UTF8 encoding to map Unicode characters into one or more bytes. The options are VT100, VT100+, **VT-UTF8**, and ANSI.

Bits Per Second

This feature sets the transmission speed for a serial port used in Console Redirection. Make sure that the same speed is used in the host computer and the client computer. A lower transmission speed may be required for long and busy lines. The options are 9600, 19200, 57600, and **115200** (bits per second).

Flow Control

Use this feature to set the flow control for Console Redirection to prevent data loss caused by buffer overflow. Send a "Stop" signal to stop sending data when the receiving buffer is full. Send a "Start" signal to start sending data when the receiving buffer is empty. The options are **None**, Hardware RTS/CTS, and Software Xon/Xoff.

The setting for each of these features is displayed:

- **Data Bits**
- **Parity**
- **Stop Bits**

▶System Agent (SA) Configuration

System Agent (SA) Configuration

The following information will be displayed:

- **SA PCIe Code Version**
- **VT-d Capability**

▶PEG Port Configuration

PEG Port Configuration

PEG 0:1:0

Enable Root Port

Select Enable to activate the Root Port. The options are Disabled, Enabled, and **Auto**.

Max Link Speed

Select **Auto**, Gen1, Gen2, or Gen3 to set the PEG Max Link Speed.

Max Link Width

Select **Auto**, Force X1, Force X2, Force X4, or Force X8 to set the PEG Max Link Width.

▶PLX Slot Information

PLX Slot Information

CPU SLOT1 PCI-E 3.0 x8 (IN x16)

CPU SLOT3 PCI-E 3.0 x16

CPU SLOT5 PCI-E 3.0 x8 (IN x16)

CPU SLOT7 PCI-E 3.0 x16

VT-d

This feature enables VT-d capability. The options are Disabled and **Enabled**.

GNA Device (B0:D8:F0)

This feature enables the SA GNA device. The options are Disabled and **Enabled**.

X2APIC Opt Out

This feature enables X2APIC Opt Out. The options are **Disabled** and Enabled.

▶Trusted Computing

Note: 1. This submenu becomes configurable when a TPM device is installed. 2. The features below are subject to change depending on the supported version of TPM device plugged into this motherboard.

Trusted Computing

The following information will be displayed:

TPM 2.0 Device Found

- **Firmware Version**
- **Vendor**

Security Device Support

This feature enables BIOS support for security devices. The options are Disabled and **Enabled**.

If this feature is set to Enabled, the following features will become available for configuration:

- **Active PCR banks**
- **Available PCR banks**

SHA-1 PCR Bank

This feature enables SHA-1 PCR Bank. The options are Disabled and **Enabled**.

SHA256 PCR Bank

This feature enables SHA256 PCR Bank. The options are Disabled and **Enabled**.

TPM State

This feature changes the TPM State. The options are Disabled and **Enabled**.

Pending operation

This feature schedules an operation for the security device. Changing this setting will reboot the system. The options are **None** and TPM Clear.

Platform Hierarchy

This feature enables Platform Hierarchy. The options are Disabled and **Enabled**.

Storage Hierarchy

This feature enables Storage Hierarchy. The options are Disabled and **Enabled**.

Endorsement Hierarchy

This feature enables Endorsement Hierarchy. The options are Disabled and **Enabled**.

TPM 20 InterfaceType

Current Status Information

The following information will be displayed:

- **TPM Enabled Status**
- **TPM Active Status**
- **TPM Owner Status**

Disable Block sid

Select Enabled to allow SID authentication be performed in TCG Storage devices. The options are **Enabled** and Disabled.

▶USB Configuration

USB Configuration

The following information will be displayed:

- **USB Module Version**
- **USB Controllers**
- **USB Devices**

Legacy USB Support

Select Enabled to support legacy USB devices. Select Auto to disable legacy support when legacy USB devices are not present. If Disable is selected, legacy USB devices will not be supported. The options are Disabled, **Enabled**, and Auto.

XHCI Hand-off

This feature is a workaround solution for operating systems that do not support XHCI (Extensible Host Controller Interface) hand-off. The XHCI ownership change should be claimed by the XHCI driver. The options are Disabled and **Enabled**.

USB Mass Storage Driver Support

This feature enables USB mass storage driver support. The options are Disabled and **Enabled**.

▶Intel(R) Rapid Storage Technology

This submenu will only appear if the following requirements are met when entering BIOS:

1. Set the Boot Mode Select to **DUAL** or **UEFI**.
2. Set the SATA Mode Selection to **Intel RST Premium With Intel Optane System Acceleration**.
3. Set the Storage Option ROM/UEFI Driver to **EFI**.

Information for installed storage drives will be viewable in this submenu when the settings above have completed.

▶Driver Health

This submenu displays the health of the LAN and its related controller.

▶TCG Storage Device Security Configuration

TCG Storage Device Security Configuration:

▶Storgae Device

Note: The feature shown here is depending on the storage device plugged into the motherboard.

Password Configuration:

Information for the following is displayed:

- **Security Subsystem Class**
- **Security Supported**
- **Security Enabled**

- **Security Locked**
- **Security Frozen**
- **User Pwd Status**
- **Admin Pwd Status**

▶Set Admin Password

Press <Enter> to create a new admin password.

▶Set User Password

Press <Enter> to create a new user password.

Note: This feature is available when the Admin Password has been activated.

Device Reset

Reset the device using 32 byte PSID (Physical Security Identification) value of the device.

4.6 H/W Monitor

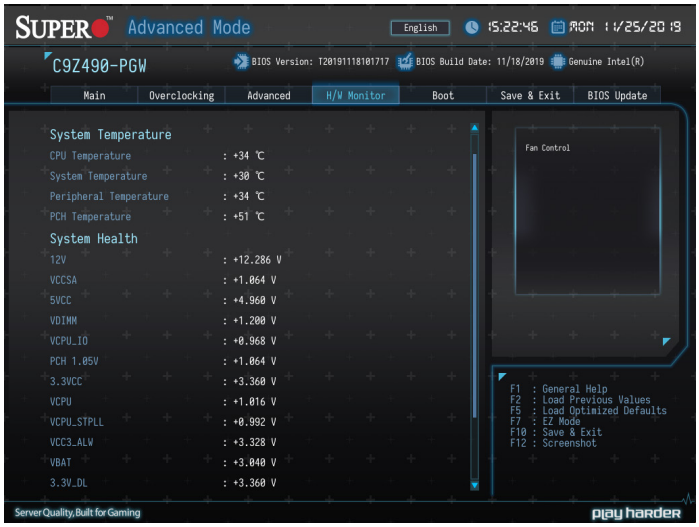

System Temperature

The following items will be displayed:

- **CPU Temperature -** the CPU temperature detected by PECI
- **System Temperature -** the system internal temperature
- **Peripheral Temperature -** the detected peripheral device temperature
- **PCH Temperature -** the detected PCH chip temperature

System Health

The voltages for the following items will be displayed:

- **12V**
- **VCCSA**
- **5VCC**
- **VDIMM**
- **VCPU_IO**
- **PCH 1.05V**
- **3.3VCC**

- **VCPU**
- **VCPU_STPLL**
- **VCC3_ALW**
- **VBAT**
- **3.3V_DL**

▶Fan Control

Fan Control Setting

Fan Speed Control Mode

This feature allows the user to decide how the system controls the speeds of the onboard fans. The CPU temperature and the fan speed are correlative. When the CPU on-die temperature increases, the fan speed will also increase for effective system cooling. Select "Full Speed" to allow the onboard fans to run at full speed (of 100% Pulse Width Modulation Duty Cycle) for maximum cooling. This setting is recommended for special system configuration or debugging. Select "Stable" for the onboard fans to run at 50% of the Initial PWM Cycle in order to balance the needs between system cooling and power saving. This setting is recommended for regular systems with normal hardware configurations. Select "Quiet" to optimize for minimal fan noise and Custom to enter user-specific settings. The options are **Quiet**, Stable, Full Speed, and Customize.

When "Customize" is selected above, the settings for **CPU FAN1/FAN2 Control, SYS FAN1/FAN2/FAN3 Control** will appear and can be configured.

SYS Fan Control

Use this feature to set Fan Speed Control Mode. The options are Auto, **PWM Mode** and DC Mode.

4.7 Boot

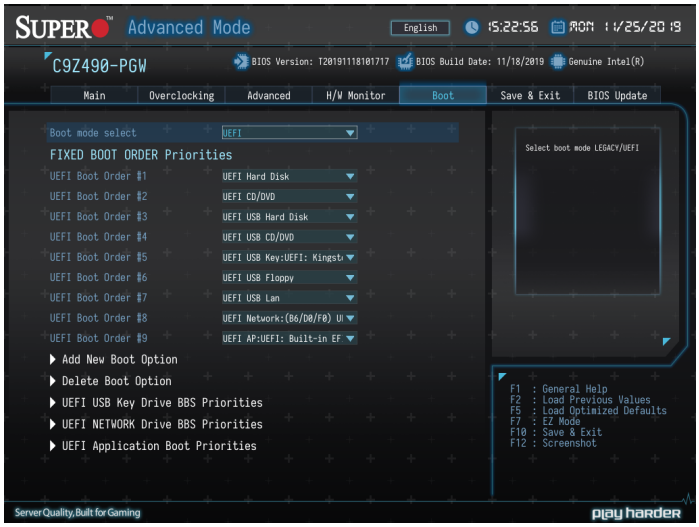

Boot mode select

Use this feature to select the type of device to be used for system boot. The options are Legacy, **UEFI**, and Dual.

Fixed Boot order Priorities

This feature prioritizes the order of bootable devices from which the system will boot. Choose an entry from top to bottom to select devices.

Legacy Boot Option #1~#8

These features display when Boot mode select is set to Legacy. The options are Hard Disk, CD/DVD, USB Hard Disk, USB CD/DVD, USB Key, USB Floppy, USB LAN, Network, and Disabled.

UEFI Boot Option #1~#9

These features display when Boot mode select is set to UEFI. The options are UEFI Hard Disk, UEFI AP: UEFI: Built-in EFI Shell, UEFI CD/DVD, UEFI USB Hard Disk, UEFI USB CD/DVD, UEFI USB Key, UEFI USB Floppy, UEFI USB Lan, UEFI Network, and Disabled.

DUAL Boot Option #1~#17

These features display when Boot mode select is set to DUAL. The options contain all options from UEFI and Legacy boot modes.

▶Add New Boot Option

Add New Boot Option

Add New Boot Option

Use this item to specify the name for the new boot option.

▶Path for Boot Option

Use this feature to enter the path for the new boot option in the format fsx:\path\filename.efi.

Boot Option File Path

Use this feature to specify the file path for the new boot option.

Create

After the name and the file path for the boot option are set, press <Enter> to create the new boot option in the boot priority list.

▶Delete Boot Option

Delete Boot Option

Delete Boot Option

Removes an EFI boot option from the boot order.

▶UEFI Hard Disk Drive BBS Priorities / UEFI CD/DVD Drive BBS Priorities / UEFI Application Boot Priorities / UEFI USB Hard Disk Drive BBS Priorities / UEFI USB CD/DVD Drive BBS Priorities / UEFI USB Key Drive BBS Priorities / UEFI USB Floppy Drive BBS Priorities / UEFI USB Lan Drive BBS Priorities / UEFI NETWORK Drive BBS Priorities / Hard Disk Drive BBS Priorities / CD/DVD Drive BBS Priorities / USB Hard Disk Drive BBS Priorities / USB CD/DVD Drive BBS Priorities / USB Key Drive BBS Priorities / USB Floppy Drive BBS Priorities / USB LAN Drive BBS Priorities / NETWORK Drive BBS Priorities

Note: These submenus are subject to change depending on the feature of Boot Mode Select and the devices installed on this motherboard.

Boot Option #1~X

Use this feature to set the system boot order.

Note: The number of X is depending on the devices installed on the motherboard.

4.8 Save & Exit

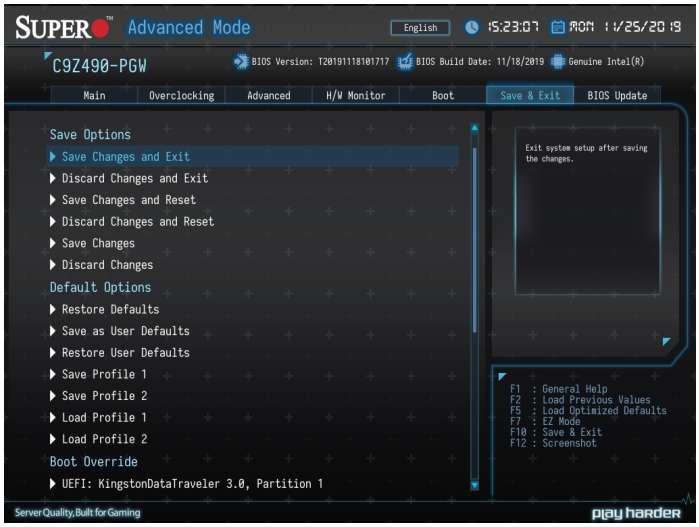

Save Options

Save Changes and Exit

Use this feature to save the changes you have made and reboot the system.

Discard Changes and Exit

Use this feature to exit the system without saving any changes and reboot the system.

Discard Changes

Use this feature to discard the changes you have made and remain in setup mode.

Default Options

Restore Defaults

This feature will load the factory-stored optimized defaults.

Save As User Defaults

This feature will save the changes as user-specified defaults.

Restore User Defaults

This feature will load previously-saved user-specified defaults.

Save Profile 1/2

This feature will save the current overclocking profile into either Profile 1 or Profile 2 location. Click OK to save the profile, otherwise, click Cancel.

Load Profile 1/2

This feature will load a previously saved overclocking profile from either Profile 1 or Profile 2 location. Click OK to load the profile, otherwise, click Cancel.

Boot override

This feature allows the user to override the Boot priorities sequence in the Boot menu, and immediately boot the system with a device specified by the user instead of the one specified in the boot list. This is an one-time override.

4.9 BIOS Update

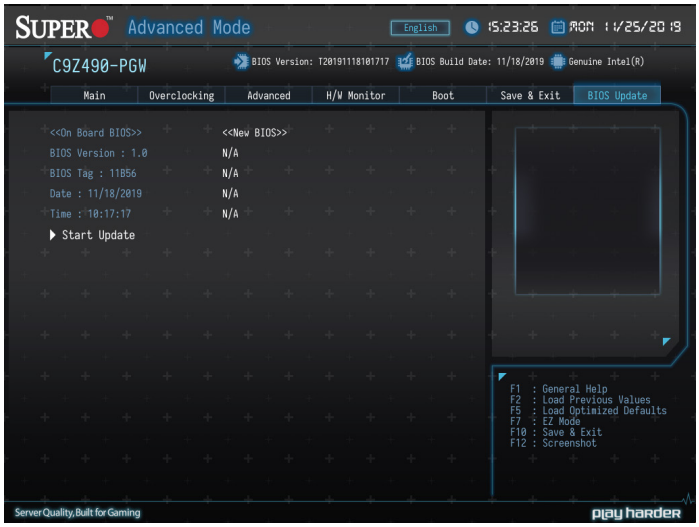

The following items will be displayed:

- **BIOS Version**
- **BIOS Tag**
- **Date**
- **Time**

Start Update

Use this utility to prepare BIOS Update with ME.

1. Click "Start Update" enter the SuperFlash utility.
2. At the prompt, select "Yes" to reboot and configure the system to Flash mode. Select "No" to cancel and view the BIOS information.
3. After the system reboots to the flash mode, the system is ready to flash the BIOS. At the prompt, slect "OK" to continue.
4. Select "Select File" and then in the pop-up menu select "General USB Flash Disk 1.00."
5. Select the filename (i.e., "C9Z490-PGW") in the pop-up menu.
6. Select "Start Flash" to flash the BIOS. A pop-up message will appear to show the progress of the BIOS flash.
7. If the flash is successful, a pop-up message will indicate the result. Select "OK" to complete the BIOS flash and to reboot the system. Check the System Information section of the BIOS Setup to check for the correct BIOS version.

Appendix A

BIOS Codes

A.1 BIOS Error POST (Beep) Codes

During the POST (Power-On Self-Test) routines, which are performed each time the system is powered on, errors may occur.

Non-fatal errors are those which, in most cases, allow the system to continue the boot-up process. The error messages normally appear on the screen.

Fatal errors are those which will not allow the system to continue the boot-up procedure. If a fatal error occurs, you should consult with your system manufacturer for possible repairs.

These fatal errors are usually communicated through a series of audible beeps. The table shown below lists some common errors and their corresponding beep codes encountered by users.

BIOS Beep (POST) Codes		
Beep Code	**Error Message**	**Description**
1 beep	Refresh	Circuits have been reset (Ready to power up)
5 short, 1 long	Memory error	No memory detected in system
5 long, 2 short	Display memory read/write error	Video adapter missing or with faulty memory
1 long continuous	System OH	System overheat condition

A.2 Additional BIOS POST Codes

The AMI BIOS supplies additional checkpoint codes, which are documented online at https://www.supermicro.com/manuals/other/AMI_AptioV_BIOS_POST_Codes_for_SM_Motherboards.pdf ("AMI BIOS POST Codes User's Guide").

When BIOS performs the Power On Self Test, it writes checkpoint codes to I/O port 0080h. If the computer cannot complete the boot process, a diagnostic card can be attached to the computer to read I/O port 0080h (Supermicro p/n AOC-LPC80-20).

For information on AMI updates, please refer to http://www.ami.com/products/.

Appendix B

Software

B.1 Driver Installation

The Supermicro website that contains drivers and utilities for your system is at https://www.supermicro.com/wftp/driver. Some of these must be installed, such as the chipset driver.

After accessing the website, go into the CDR_Images (in the parent directory of the above link) and locate the ISO file for your motherboard. Download this file to a USB flash drive or a DVD. (You may also use a utility to extract the ISO file if preferred.)

Another option is to go to the Supermicro website at http://www.supermicro.com/products/. Find the product page for your motherboard and download the latest drivers and utilities. Insert the flash drive or disk and the screenshot shown below should appear.

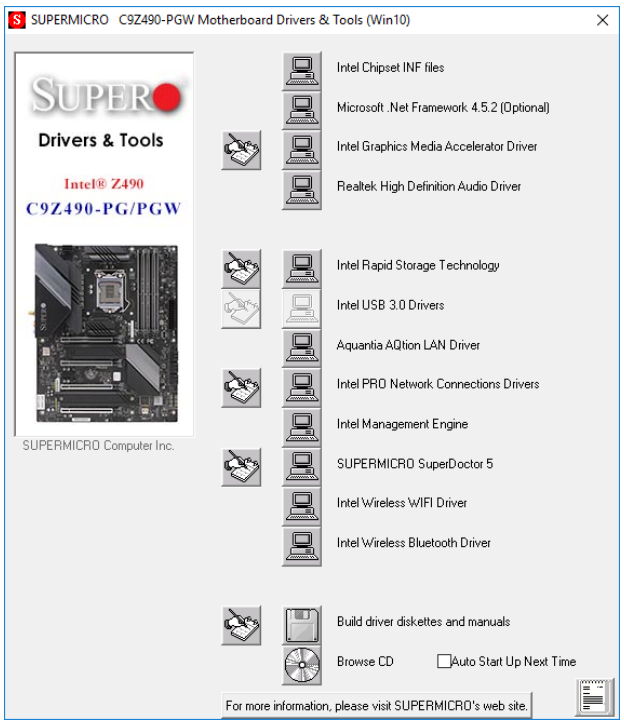

Figure B-1. Driver & Tool Installation Screen

Note: Click the icons showing a hand writing on paper to view the readme files for each item. Click the computer icons to the right of these items to install each item (from top to bottom) one at a time. **After installing each item, you must reboot the system before moving on to the next item on the list.** The bottom icon with a CD on it allows you to view the entire contents.

B.2 SuperDoctor® 5

The Supermicro SuperDoctor 5 is a program that functions in a command-line or web-based interface for Windows and Linux operating systems. The program monitors such system health information as CPU temperature, system voltages, system power consumption, fan speed, and provides alerts via email or Simple Network Management Protocol (SNMP).

SuperDoctor 5 comes in local and remote management versions and can be used with Nagios to maximize your system monitoring needs. With SuperDoctor 5 Management Server (SSM Server), you can remotely control power on/off and reset chassis intrusion for multiple systems with SuperDoctor 5 or IPMI. SuperDoctor 5 Management Server monitors HTTP and SMTP services to optimize the efficiency of your operation.

Note: The default User Name and Password for SuperDoctor 5 is ADMIN / ADMIN.

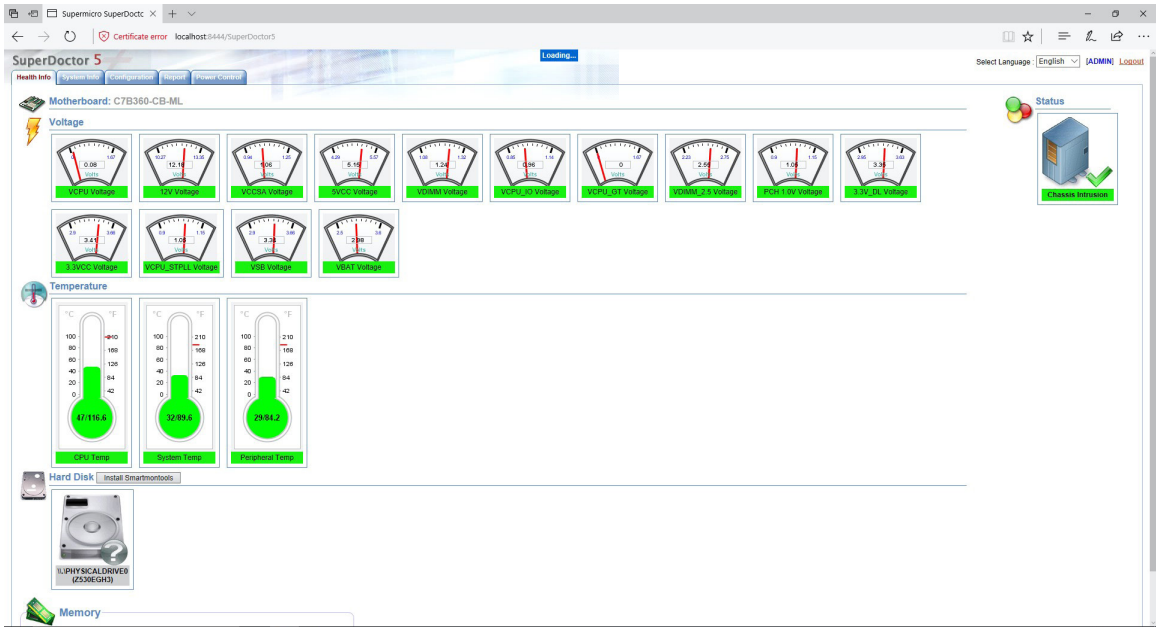

Figure B-2. SuperDoctor 5 Interface Display Screen (Health Information)

Appendix C

Standardized Warning Statements

The following statements are industry standard warnings, provided to warn the user of situations which have the potential for bodily injury. Should you have questions or experience difficulty, contact Supermicro's Technical Support department for assistance. Only certified technicians should attempt to install or configure components.

Read this section in its entirety before installing or configuring components.

These warnings may also be found on our website at http://www.supermicro.com/about/policies/safety_information.cfm.

Battery Handling

Warning! There is the danger of explosion if the battery is replaced incorrectly. Replace the battery only with the same or equivalent type recommended by the manufacturer. Dispose of used batteries according to the manufacturer's instructions

電池の取り扱い

電池交換が正しく行われなかった場合、破裂の危険性があります。交換する電池はメーカーが推奨する型、または同等のものを使用下さい。使用済電池は製造元の指示に従って処分して下さい。

警告

电池更换不当会有爆炸危险。请只使用同类电池或制造商推荐的功能相当的电池更换原有电池。请按制造商的说明处理废旧电池。

警告

電池更換不當會有爆炸危險。請使用製造商建議之相同或功能相當的電池更換原有電池。請按照製造商的說明指示處理廢棄舊電池。

Warnung

Bei Einsetzen einer falschen Batterie besteht Explosionsgefahr. Ersetzen Sie die Batterie nur durch den gleichen oder vom Hersteller empfohlenen Batterietyp. Entsorgen Sie die benutzten Batterien nach den Anweisungen des Herstellers.

Attention

Danger d'explosion si la pile n'est pas remplacée correctement. Ne la remplacer que par une pile de type semblable ou équivalent, recommandée par le fabricant. Jeter les piles usagées conformément aux instructions du fabricant.

¡Advertencia!

Existe peligro de explosión si la batería se reemplaza de manera incorrecta. Reemplazar la batería exclusivamente con el mismo tipo o el equivalente recomendado por el fabricante. Desechar las baterías gastadas según las instrucciones del fabricante.

אזהרה!

קיימת סכנת פיצוץ של הסוללה במידה והוחלפה בדרך לא תקינה. יש להחליף

את הסוללה בסוג התואם מחברת יצרן מומלצת.

סילוק הסוללות המשומשות יש לבצע לפי הוראות היצרן.

هناك خطر من انفجار في حالة اسحبذال البطارية بطريقة غير صحيحة فعليل

اسحبذال البطارية

فقط بنفس النع أو ما يعادلها مما أوصث به الشرمة المصنعة

جخلص من البطاريات المسحعملة وفقا لحعليمات الشرمة الصانعة

경고!

배터리가 올바르게 교체되지 않으면 폭발의 위험이 있습니다. 기존 배터리와 동일하거나 제조사에서 권장하는 동등한 종류의 배터리로만 교체해야 합니다. 제조사의 안내에 따라 사용된 배터리를 처리하여 주십시오.

Waarschuwing

Er is ontploffingsgevaar indien de batterij verkeerd vervangen wordt. Vervang de batterij slechts met hetzelfde of een equivalent type die door de fabrikant aanbevolen wordt. Gebruikte batterijen dienen overeenkomstig fabrieksvoorschriften afgevoerd te worden.

Product Disposal

Warning! Ultimate disposal of this product should be handled according to all national laws and regulations.

製品の廃棄

この製品を廃棄処分する場合、国の関係する全ての法律・条例に従い処理する必要があります。

警告

本产品的废弃处理应根据所有国家的法律和规章进行。

警告

本產品的廢棄處理應根據所有國家的法律和規章進行。

Warnung

Die Entsorgung dieses Produkts sollte gemäß allen Bestimmungen und Gesetzen des Landes erfolgen.

¡Advertencia!

Al deshacerse por completo de este producto debe seguir todas las leyes y reglamentos nacionales.

Attention

La mise au rebut ou le recyclage de ce produit sont généralement soumis à des lois et/ou directives de respect de l'environnement. Renseignez-vous auprès de l'organisme compétent.

סילוק המוצר

אזהרה!

סילוק סופי של מוצר זה חייב להיות בהתאם להנחיות וחוקי המדינה.

عند التخلص النهائي من هذا المنتج ينبغي التعامل معه وفقا لجميع القانين واللائح البطنية

경고!

이 제품은 해당 국가의 관련 법규 및 규정에 따라 폐기되어야 합니다.

Waarschuwing

De uiteindelijke verwijdering van dit product dient te geschieden in overeenstemming met alle nationale wetten en reglementen.

Appendix D

UEFI BIOS Recovery

Warning: Do not upgrade the BIOS unless your system has a BIOS-related issue. Flashing the wrong BIOS can cause irreparable damage to the system. In no event shall Supermicro be liable for direct, indirect, special, incidental, or consequential damages arising from a BIOS update. If you need to update the BIOS, do not shut down or reset the system while the BIOS is updating to avoid possible boot failure.

D.1 Overview

The Unified Extensible Firmware Interface (UEFI) provides a software-based interface between the operating system and the platform firmware in the pre-boot environment. The UEFI specification supports an architecture-independent mechanism that will allow the UEFI OS loader stored in an external storage device to boot the system. The UEFI offers clean, hands-off management to a computer during system boot.

D.2 Recovering the UEFI BIOS Image

A UEFI BIOS flash chip consists of a recovery BIOS block and a main BIOS block (a main BIOS image). The recovery block contains critical BIOS codes, including memory detection and recovery codes for the user to flash a healthy BIOS image if the original main BIOS image is corrupted. When the system power is turned on, the recovery block codes execute first. Once this process is complete, the main BIOS code will continue with system initialization and the remaining POST (Power-On Self-Test) routines.

Note1: Follow the BIOS recovery instructions in Section D.3 for BIOS recovery when the main BIOS block crashes.

Note 2: If the recovery block processes stated in Section D.3 fail, you will need to follow the procedures to make a Returned Merchandise Authorization (RMA) request. Refer to Section 3.5 for more information about the RMA request.

D.3 Recovering the Main BIOS Block with a USB Device

This feature allows the user to recover the main BIOS image using a USB-attached device without additional utilities used. A USB flash device such as a USB Flash Drive, or a USB CD/DVD ROM/RW device can be used for this purpose. However, a USB hard disk drive cannot be used for BIOS recovery at this time. The file system supported by the recovery block is FAT (including FAT12, FAT16, and FAT32) which is installed on a bootable or non-bootable USB-attached device.

To perform UEFI BIOS recovery using a USB-attached device, follow the instructions below.

1. Please use a different machine to download the BIOS package for your motherboard or your system from the product page available on our website at www.supermicro.com.

2. Extract the BIOS package to a USB device and rename the BIOS ROM file [BIOSname#.###] that is included in the BIOS package to SUPER.ROM for BIOS recovery use.

3. Copy the SUPER.ROM file into the Root "\" directory of the USB device.

   Note: Before recovering the main BIOS image, confirm that the SUPER.ROM file you have is the same version or a close version meant for your motherboard.

4. Insert the USB device that contains the SUPER.ROM file into the system before you power on the system.

5. After locating the SUPER.ROM file, the system will enter the BIOS Recovery menu as shown below.

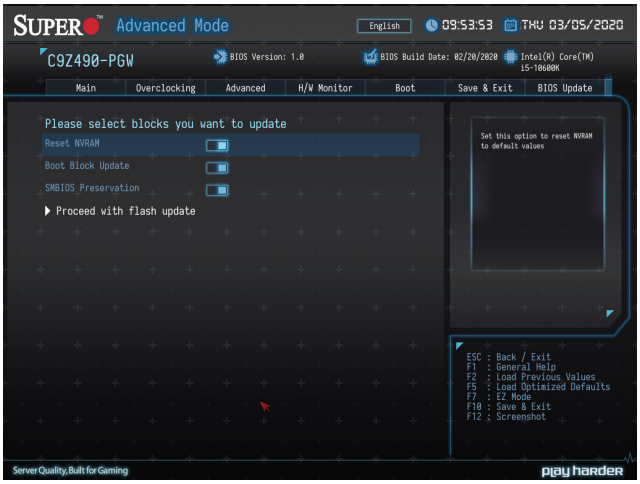

   Note: At this point, you may decide if you want to start the BIOS recovery. If you decide to proceed with BIOS recovery, follow the procedures below.

6. When the screen as shown above displays, use the arrow keys to select the item "Proceed with flash update" and press the <Enter> key. A progress bar will appear on the screen and indicate the update procedure is ongoing.

   Note: *Do not interrupt the BIOS flashing process until it is completed*.

7. After the BIOS recovery process is complete, press any key to reboot the system.

Note: It is recommended that you update your BIOS after BIOS recovery. Please refer to Chapter 3 for BIOS update instructions.

8. Press <Del> during system boot to enter the BIOS Setup utility. From the top of the tool bar, select Boot to enter the submenu. From the submenu list, select Boot Option #1 as shown below. Then, set Boot Option #1 to [UEFI AP:UEFI: Built-in EFI Shell]. Press <F4> to save the settings and exit the BIOS Setup utility.

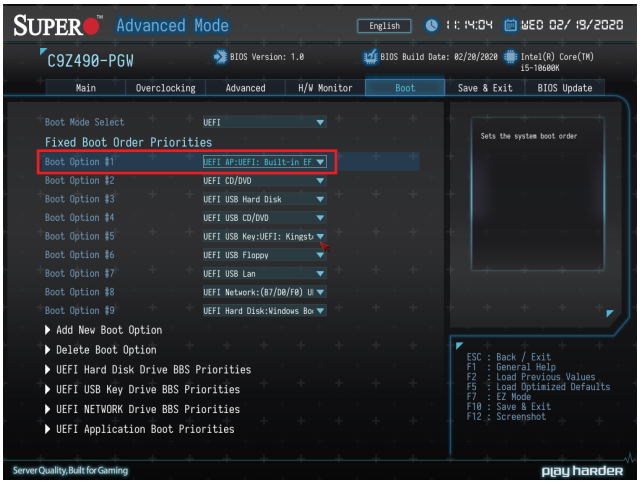

9. When the UEFI Shell prompt appears, type fs# to change the device directory path. Go to the directory that contains the BIOS package you extracted earlier in Step 2. Enter flash.nsh BIOSname#.### at the prompt to start the BIOS update process.

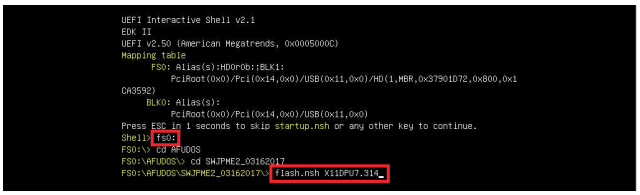

Note: *Do not interrupt this process* until the BIOS flashing is complete.

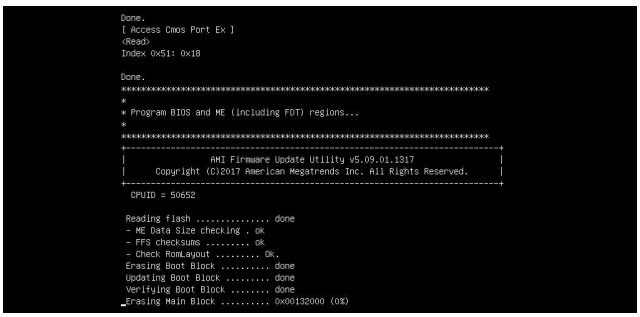
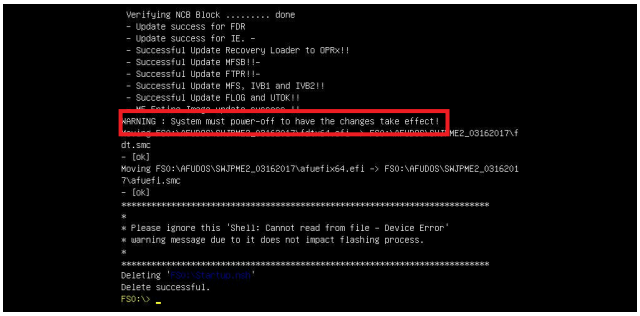
10. The screen above indicates that the BIOS update process has completed. Reboot the system when you see the screen below.