SF67C1PO



Category	60 cm
Product Family	Oven
Power supply	Electric
Heat source	ELECTRICITY
Cooking method	Fan assisted
Cleaning system	Ever Clean enamel
EAN code	8017709351311

Aesthetics

Aesthetic	Cortina	**Serigraphy type**	Symbols
Colour	Cream	**Door**	With panel
Design	Flat	**Handle**	Cortina
Component finish	Antique brass	**Handle Colour**	Antique brass
Material	Painted material	**Logo**	Embossed
Glass Type	Clear	**Control knobs**	Cortina
Serigraphy colour	Gold	**Controls colour**	Cream

Controls

Display name	Orologio	**No. of controls**	2
Control setting	Knobs		

Programs / Functions main oven

No. of cooking functions 6

Traditional cooking functions

- Static
- Fan assisted
- Eco
- Large grill
- Fan grill (large)
- Fan assisted base

Options

Time-setting options	Automatic end cooking	**Timer**	1

Minute minder	Yes

Technical Features



Capacity (Lt)	70 l	**Large grill - Power**	2700 W
Cavity	Sares	**Door opening type**	Standard opening
Minimum Temperature	50 °C	**Door**	Temperate door
Maximum temperature	250 °C	**Removable door**	Yes
No. of shelves	5	**Full glass inner door**	Yes
N. of fans	1	**Removable inner door**	Yes
No. of lights	1	**Total no. of door glasses**	3
Light type	Halogen	**Cooling system**	Tangential
User-replaceable light	Yes	**Cooling duct**	Single
Light Power	40 W	**Usable cavity space dimensions (HxWxD)**	360x460x425 mm
Lower heating element power	1200 W	**Temperature control**	Electro-mechanical
Upper heating element - Power	1000 W	**Cavity material**	Ever clean Enamel
Grill element - power	1700 W		

Performance / Energy Label



Energy efficiency class	A	**Energy consumption in forced air convection**	2,88 MJ
Net volume of the cavity	70 l	**Energy consumption per cycle in fan-forced convection**	0,80 kWh
Energy consumption per cycle in conventional mode	1,15 kWh	**Number of cavities**	1
Energy consumption in conventional mode	4,14 MJ	**Energy efficiency index**	95,2 %

Accessories included

Rack with back stop	1	**Enamelled deep tray (40mm)**	1

Electrical Connection

Voltage	220-240 V	**Nominal power**	3000 W
Plug	Not present	**Frequency (Hz)**	50 Hz
Current	13 A	**Power supply cable length**	150 cm

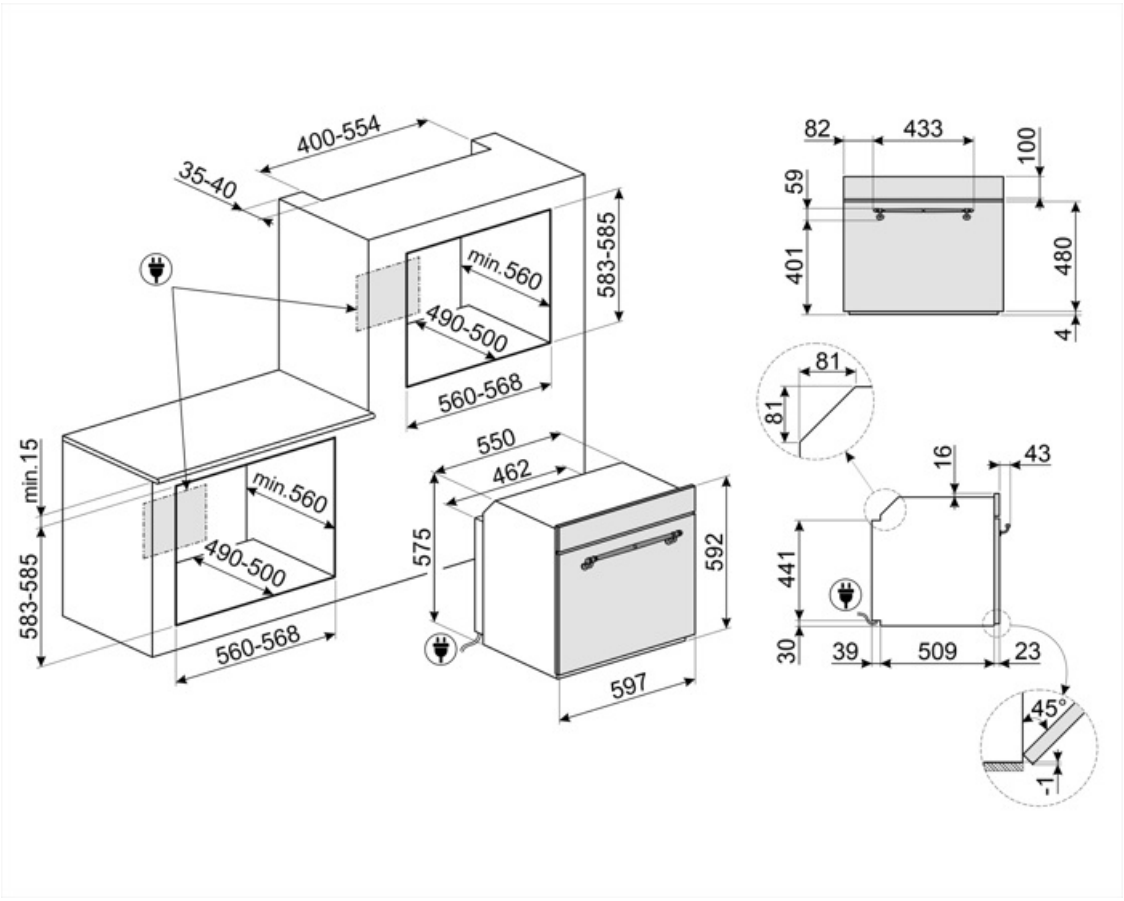
400-554
35-40
583-585
min.560
490-500
560-568
min.15
583-585
min.560
490-500
560-568
550
462
575
592
597
82
433
100
59
401
480
4
81
81
16
43
441
30
39
509
23
45°
1

Compatible Accessories



BN620-1

Enamelled tray suitable for 45 cm and 60 cm ovens. Depth 20 mm. Perfect for a wide range of savoury and sweet baking.



GTP

Partially extractable telescopic guides (1 level), suitable for traditional ovens. Made in stainless steel, they guarantee stability and facilitate the smooth extraction of the trays.



PALPZ

Pizza shovel with folding handle. Dimensions L31.5 x H32.5 cm. Easy and convenient to use and store. Perfect for serving pizza, bread and savory pastries in a safe and professional way.



STONE2

Rectangular pizza stone without handles, suitable for 45cm and 60cm wide ovens. Dimensions W42 x H1.8 x D37.5cm. Ideal for cooking pizzas with the same results as a typical wood-fired oven. Can also be used for baking bread, focaccias and other recipes such as pies, flans or biscuits



BN640

Enamelled tray suitable for 45cm and 60cm ovens. Depth 540 mm. Perfect for cooking and roasting meat and fish in sauces. Also ideal for experimenting with lighter and crunchy side dishes



GTT

Totally extractable telescopic guides (1 level), suitable for traditional ovens. Made in stainless steel, they guarantee stability and facilitate the smooth extraction of the trays.



PR3845X

Antifingerprint stainless steel. Cover for furniture in column installation of more ovens

Symbols glossary



Energy efficiency class A



Triple glazed doors: Number of glazed doors.



Ever Clean Enamel: Ever Clean enamel is applied electrostatically, corner to corner and edge to edge to prevent cracking or cracks over time. It is a particular pyrolytic enamel, resistant to acids which, in addition to being pleasantly bright, promotes greater cleaning of the oven walls, thanks to its lower porosity. It is baked at over 850 °C and slowly polymerized at a scientifically determined rate to ensure uniform depth and strength. Ever Clean enamel creates an impeccable finish both on the inside of the oven and on the trays, making the surfaces of the oven incredibly easy to maintain over time as it reduces the adhesion of fat during cooking.



Fan assisted: Intense and homogeneous traditional cooking, also suitable for complex recipes. The fan is active and the heat comes from below and from above at the same time. Ventilated cooking ensures a faster and more homogeneous result, leaving fragrant foods outside and moister inside. Ideal for baked pasta, biscuits, roasts and cobblers.



ECO: low energy consumption cooking: this function is particularly suitable for cooking on a single shelf with low energy consumption. It is recommended for all types of food except those that can generate a lot of moisture (for example vegetables). To achieve maximum energy savings and reduce time, it is recommended to put the food in the oven without preheating the cooking compartment.



Fan grill: very intense heat coming only from above from a double heating element. The fan is active. It allows the optimal grilling of thickest meats. Ideal for large cuts of meat.



The inner door glass: can be removed with a few quick movements for cleaning.



The oven cavity has 5 different cooking levels.



The capacity indicates the amount of usable space in the oven cavity in litres.



Air cooling system: to ensure a safe surface temperatures.



Electric



Fan assisted base: the mix of fan and lower heating element alone allows to finish cooking foods already cooked on the surface but not internally more quickly. This system is recommended to finish cooking foods that are already well cooked on the surface, but not internally, which therefore require a moderate higher heat. Ideal for any type of food.



Static: Traditional cooking suitable for the preparation of one dish at a time. The fan is not active and the heat comes from below and from above at the same time. Static cooking is slower and more delicate, ideal in order to get well cooked and dry dishes even inside. Ideal for cooking all types of roasts, fatty meats, bread, filled cakes.



Grill: Very intense heat coming only from above from a double heating element. The fan is not active. Provides excellent grilling and gratinating results. Used at the end of cooking, it gives a uniform browning to dishes.



All glass inner door: All glass inner door, a single flat surface which is simple to keep clean.



Side lights: Two opposing side lights increase visibility inside the oven.



The capacity indicates the amount of usable space in the oven cavity in litres.