Alienware AW2521HF/AW2521HFL

ALIENWARE

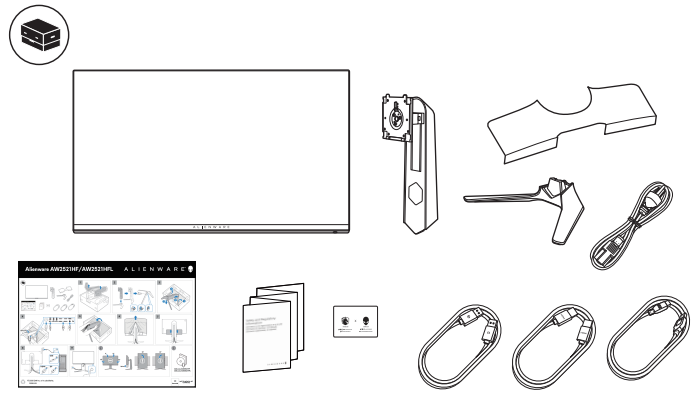

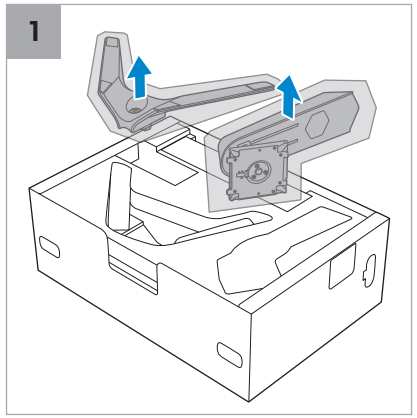

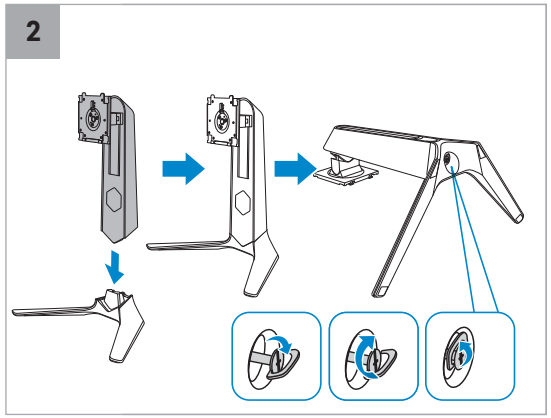

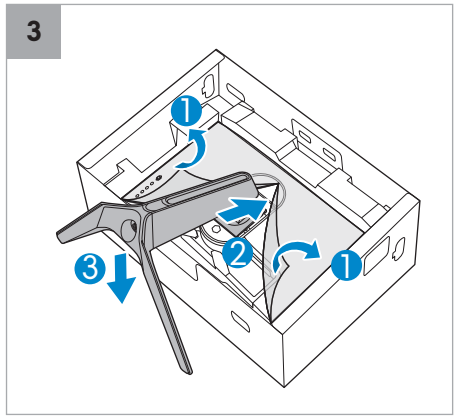

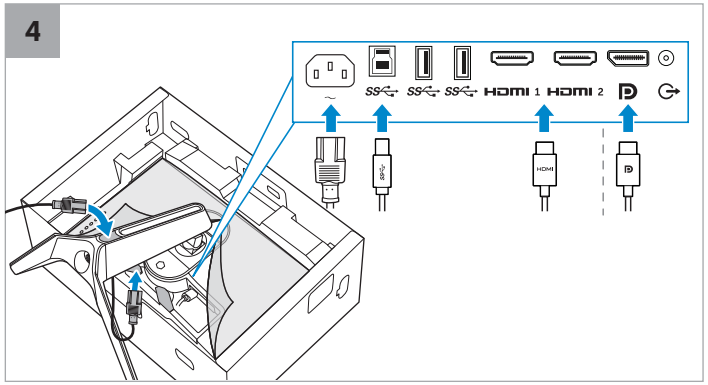

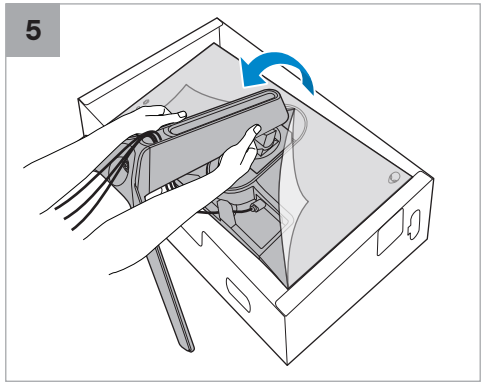

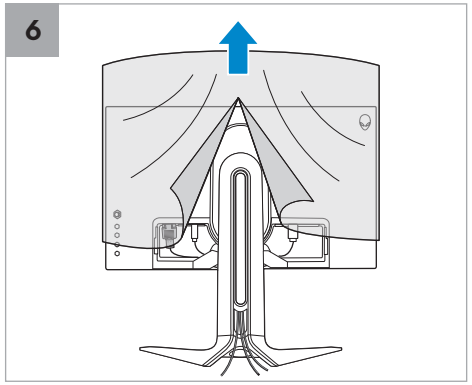

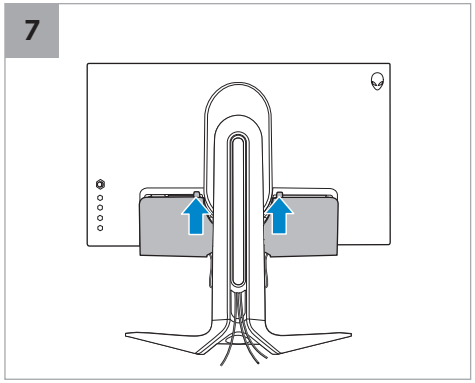

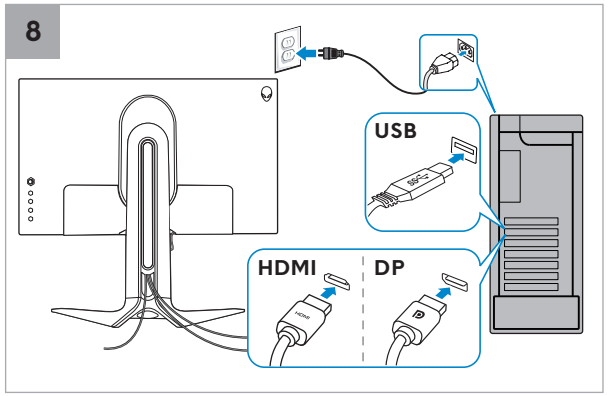

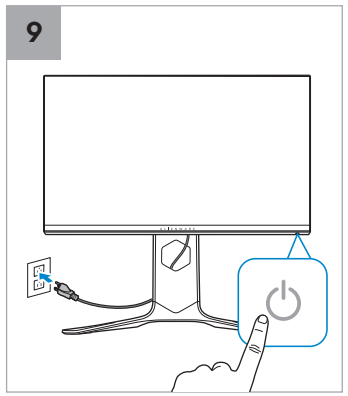

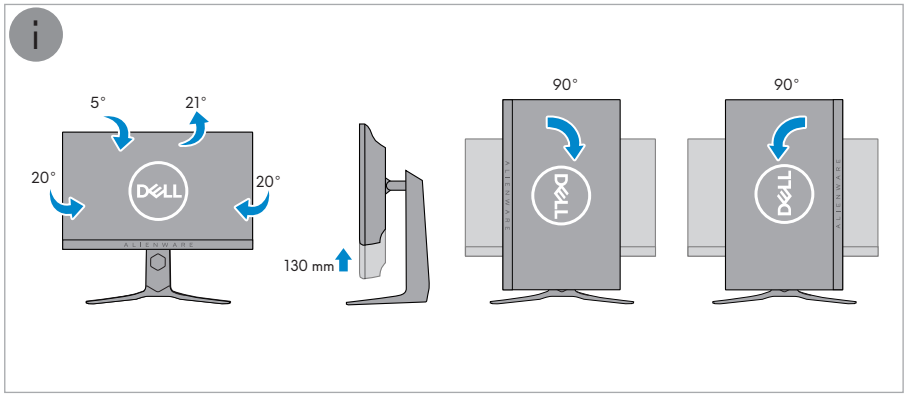

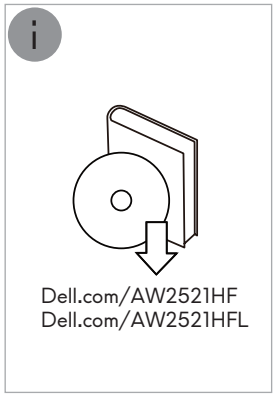

© 2020 Dell Inc. or its subsidiaries.
2020-03

Dell P/N: GGPG6 Rev. A01
4J.4PM01.002