OPEN
Industry Standard, Flexible Architecture

GREEN
Less Heat, Less Power Consumption

STABLE
Robust Design, Quality Parts

Stable and
Reliable Solution

Server/Workstation
Motherboard

1U4LW Series

User Manual

English

Version 1.0
Published March 2021
Copyright©2021 ASRock Rack Inc. All rights reserved.

Copyright Notice:

No part of this documentation may be reproduced, transcribed, transmitted, or translated in any language, in any form or by any means, except duplication of documentation by the purchaser for backup purpose, without written consent of ASRock Rack Inc.

Products and corporate names appearing in this documentation may or may not be registered trademarks or copyrights of their respective companies, and are used only for identification or explanation and to the owners' benefit, without intent to infringe.

Disclaimer:

Specifications and information contained in this documentation are furnished for informational use only and subject to change without notice, and should not be constructed as a commitment by ASRock Rack. ASRock Rack assumes no responsibility for any errors or omissions that may appear in this documentation.

With respect to the contents of this documentation, ASRock Rack does not provide warranty of any kind, either expressed or implied, including but not limited to the implied warranties or conditions of merchantability or fitness for a particular purpose.

In no event shall ASRock Rack, its directors, officers, employees, or agents be liable for any indirect, special, incidental, or consequential damages (including damages for loss of profits, loss of business, loss of data, interruption of business and the like), even if ASRock Rack has been advised of the possibility of such damages arising from any defect or error in the documentation or product.

This device complies with Part 15 of the FCC Rules. Operation is subject to the following two conditions:
(1) this device may not cause harmful interference, and
(2) this device must accept any interference received, including interference that may cause undesired operation.

CALIFORNIA, USA ONLY

The Lithium battery adopted on this motherboard contains Perchlorate, a toxic substance controlled in Perchlorate Best Management Practices (BMP) regulations passed by the California Legislature. When you discard the Lithium battery in California, USA, please follow the related regulations in advance.
"Perchlorate Material-special handling may apply, see www.dtsc.ca.gov/hazardouswaste/perchlorate"

ASRock Rack's Website: www.ASRockRack.com

Setting up the Server in a Restricted Access Location

- Access can only be gained by service persons or by users who have been instructed about the reasons for the restrictions applied to the location and about any precautions that shall be taken.
- Access is through the use of a tool or lock and key, or other means of security, and is controlled by the authority responsible for the location.
- Leave enough clearance (25 inches in the front and 30 inches in the back of the rack) to allow the front door to be opened completely and to allow for sufficient airflow.
- This product is for installation merely in a Restricted Access Location.
- This product is not suitable for use with visual display work place devices according to §2 of the the German Ordinance for Work with Visual Display Units.

Replaceable Batteries

CAUTION
RISK OF EXPLOSION IF BATTERY IS REPLACED BY AN INCORRECT TYPE.
DISPOSE OF USED BATTERIES ACCORDING TO THE INSTRUCTIONS

Warning

When removal of the chassis lid required for servicing:
- Turn off power and unplug any power cords/cables, and
- Reinstall the chassis lid before restoring power.

Important Safety Instructions

Pay close attention to the following safety instructions before performing any of the operation. Basic safety precautions should be followed to protect yourself from harm and the product from damage:

- Operation of the product should be carried out by suitably trained, qualified, and certified personnel only to avoid risk of injury from electrical shock or energy hazard.
- Disconnect the power cord from the wall outlet when installing or removing main system components, such as the motherboard and power supply unit.
- Place the system on a stable and flat surface.
- Use extreme caution when working with high-voltage components.
- When handling parts, use a grounded wrist strap designed to prevent static discharge.
- Keep the area around the system clean and clutter-free.
- Keep all components and printed circuit boards (PCBs) in their antistatic bags when not in use.
- Handle a board by its edges only; do not touch its components, peripheral chips, memory modules or contacts.

Contents

Chapter 1 Introduction 1

1.1 Shipping Box Contents 2

1.2 Specifications 3

Chapter 2 Server System Overview 4

2.1 System Components 4

2.2 Internal Features 5

2.3 System Front Panel 6

2.4 System Rear Panel 6

2.5 Front Control Panel Buttons and LEDs 7

2.6 Drive Tray LEDs 9

Chapter 3 Hardware Installation and Maintenance 10

3.1 Server Top Cover 11

3.2 Hard Drive 13

3.3 Power Supply 15

3.4 System Fan 17

3.5 Backplane 18

3.6 Server Board 19

3.7 Add-on Card 20

3.8 Air Duct 22

Chapter 4 Chassis Cables 25

Chapter 5 Board Specifications 27

5.1 Hard Drive Backplanes (BPB) 27

5.2 Front Panel Board (FPB) 30

Appendix A **31**

Installing the CPU (AMD AM4 Socket) 31

Installing the CPU Heatsink 33

Installation of Memory Modules (DIMM) 35

Chapter 1 Introduction

Thank you for purchasing 1U4LW Series, a reliable barebone system produced under ASRock Rack's consistently stringent quality control. It delivers excellent performance with robust design conforming to ASRock Rack's commitment to quality and endurance.

Because the hardware specifications might be updated, the content of this documentation will be subject to change without notice. In case any modifications of this documentation occur, the updated version will be available on ASRock Rack's website without further notice. If you require technical support related to this product, please visit our website for specific information about the model you are using.
ASRock Rack's Website: www.ASRockRack.com

The illustrations shown in this manual are examples only, the actual system may differ slightly .

1.1 Shipping Box Contents

Item	Quantity
1U4LW Series Barebone (1U form factor)	1
System Boards (MB)*	1
Power Supply Unit(s)*	1 or 2
System Fans*	5
HDD Backplane (BPB)*	1
Front Panel Board (FPB)*	1
Fan Cables*	5
BPB SATA Cable*	1
2.5" SATA HDD Cable Type 1*	1
2.5" SATA HDD Cable Type 2*	2
USB Cable (attached to FPB)*	1
Aux_Panel Cable*	1
Accessory Box	1
1U Cooler	1
Riser Board	1
Air Duct* *(The air duct (for PCIE card) in the accessory box is for 1L4LW/X470 series only)*	2 or 3
Slide Rail	1

** The components are pre-installed.*

If any items are missing or appear damaged, contact your authorized dealer.

English

1.2 Specifications

1U4LW Series		
System Physical Status		
Form Factor	1U Rackmount	
Dimension (D x W x H)	536.35 x 482.6 x 43.7 mm (21" x 19" x 1.72")	
Support MB Size	mATX / ATX	
Front Panel		
Buttons	• Power On/Standby button • ID button • System reset button • NMI Button*(for 1U4LW-X470 only)*	
LEDs	• Power LED • Identification LED • Hard drive activity LED • 4 x Network activity LEDs • System event LED	
I/O Ports	2 x USB 3.0 ports	
External Drive Bay		
Front Side Drive Bay	4 Bay 3.5" SATA HDD (6Gb/s)	
System Cooling		
Fan	40 x 28 mm PWM Easy-Swap Fans x 5	
Power Supply		
Type	Single PSU (Flex-ATX)	Redundant PSU
Output Watts	400W	1U4LW-X470 Series: 300W 1U4LW-X570 Series: 450W
Efficiency	Gold	Gold

**Please be noted that the functions are supported depending on the type of the server board.*

Please refer to the user manual of the motherboard you use for detailed information about motherboard components and features.

English

Chapter 2 Server System Overview

This chapter provides diagrams showing the location of important components of the server system.

2.1 System Components

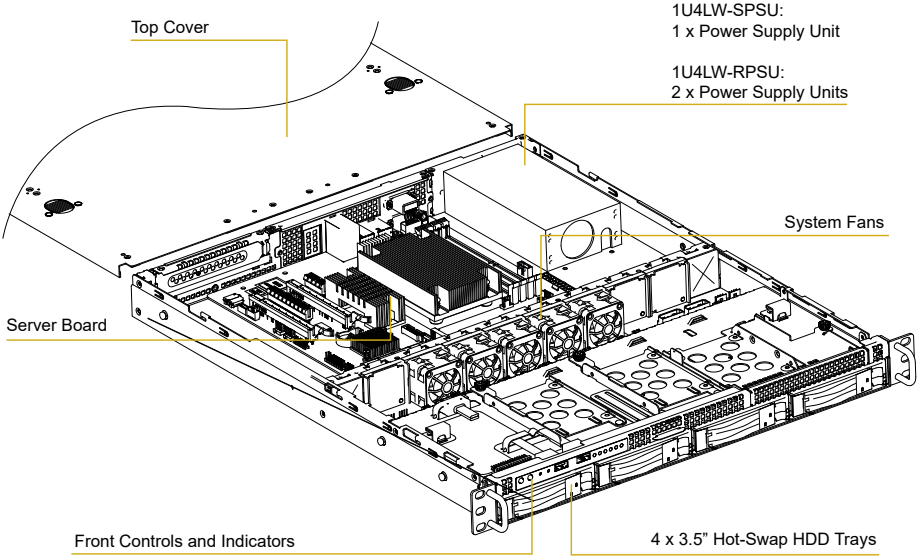

**The illustrations in this User Manual are for references only. The actual product may be slightly different by SKU.*

English

2.2 Internal Features

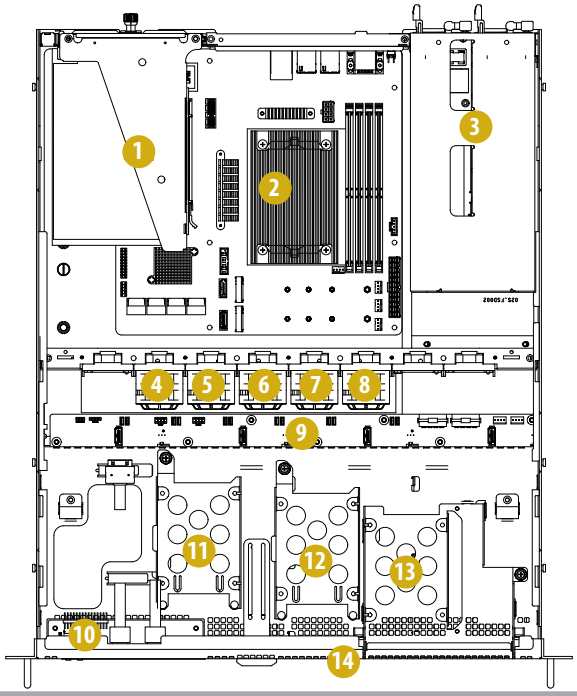

No.	From
1	Riser Card
2	Serverboard
3	1U4LW-SPSU: 1 x Power Supply Unit (PSU) 1U4LW-RPSU: 2 x Power Supply Units (PSU)
4	System Fan 5
5	System Fan 4
6	System Fan 3
7	System Fan 2
8	System Fan 1
9	HDD Backplane Board (BPB)
10	Front Panel Board (FPB)
11	2.5" SATA HDD
12	2.5" SATA HDD
13	2.5" SATA HDD or Slim ODD
14	4 x 3.5" SATA HDDs (Hot-swapable)

2.3 System Front Panel

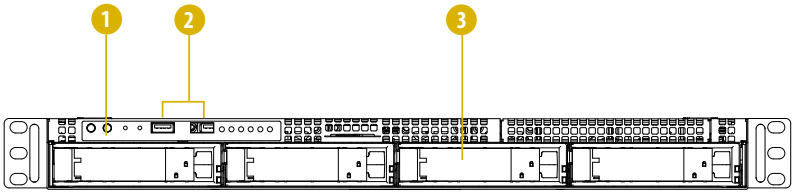

No.	Description
1	Control Panel Buttons and LEDs
2	2 x USB 3.0 Ports
3	4 x 3.5" Hot-Swap HDD Trays

2.4 System Rear Panel

1U4LW-SPSU

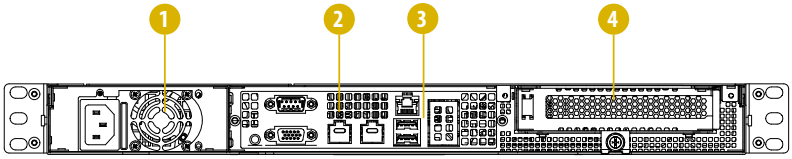

1U4LW-RPSU

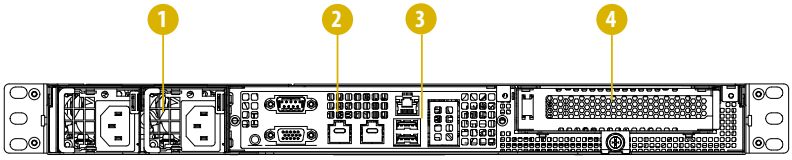

No.	Description
1	1U4LW-SPSU: 1 x Power Supply Unit (PSU) 1U4LW-RPSU: 2 x Power Supply Units (PSU)
2	Rear Vent
3	I/O Shield (depends on the specification of the server board)
4	PCI Express Slot (for the riser card)

2.5 Front Control Panel Buttons and LEDs

Front Control Panel *(1U4LW-X470 Series)*

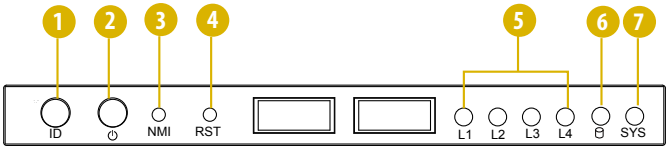

No.	Description
1	ID Button and LED
2	Power Button and LED
3	NMI (Nonmaskable Interrupt) Button
4	System Reset Button
5	LAN1, LAN2, LAN3, LAN4 Activity LED
6	HDD Status LED
7	System Status LED

**Please be noted that the functions are supported depending on the type of the server board.*

Front Control Panel *(1U4LW-X570 Series)*

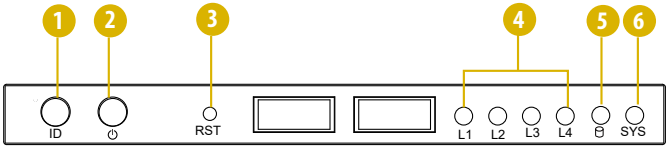

No.	Description
1	ID Button and LED
2	Power Button and LED
3	System Reset Button
4	LAN1, LAN2, LAN3, LAN4 Activity LED
5	HDD Status LED
6	System Status LED

**Please be noted that the functions are supported depending on the type of the server board.*

NMI (Nonmaskable Interrupt) Button *(for 1U4LW-X470 Series only)*

Press the NMI button with a paper clip or pin to generate a nonmaskable interrupt and to put the server in a halt state for examination.

System Reset Button

When the system is completely unresponsive, press the system reset button to reboot the

server without shutting it off and initialize the system.

ID Button

Press the ID button to toggle the front panel ID LED and the baseboard ID LED on and off. You are able to locate the server you're working on from behind a rack of servers.

Power Button

Press the power switch button to toggle the system power on and standby/sleep modes. To remove all power from the system completely, disconnect the power cord from the server.

Status LED Definitions

Power LED	
Status	**Description**
Blue	Power on
Blinking Blue	Standby(Sleep) mode
Off	Power off

ID LED	
Status	**Description**
Blue	System identification is active.
Off	System identification is disabled.

System Status LED	
Status	**Description**
Off	Running or normal operation
Yellow	At least one sensor has critical alert

HDD Status LED	
Status	**Description**
Blinking Green	HDD access
Off	HDD idle

LAN1, LAN2, LAN3, LAN4 LED	
Status	**Description**
Amber	Link between system and network or no access
Blinking Amber	Network access

2.6 Drive Tray LEDs

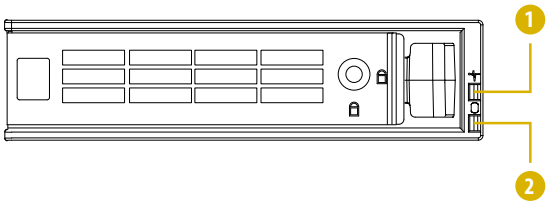

No.	Description
1	HDD Power LED
2	HDD Activity LED

Status LED Definitions

HDD Power LED	
Status	**Description**
Blue	HDD powered-on
Off	No power to HDD

HDD Activity LED	
Status	**Description**
Solid Green	HDD active
Blinking Green	HDD accessing or reading
Red	HDD failed
Off	HDD powered-off

Chapter 3 Hardware Installation and Maintenance

This chapter helps you assemble the chassis and install components.

Before You Begin

Before you work with the server, pay close attention to the "Important Safety Instructions" at the beginning of this manual.

1. Make sure the server is powered off.
   Power down the server if it is still running.
   (1) Press the Power button to power off the server from full-power mode to standby-power (sleep) mode. The Power LED at the front turns from solid green to blinking green.
   (2) Disconnect the power cord first from the AC outlet and then from the server. The power LED turns off.

> ⚠ *The server is not completely powered down when you press the Power button on the front panel. The Power button lets the server toggle between Power On and Standby (Sleep) modes. Some internal circuitry remain active in the Standby mode. To remove all power from the system completely, be sure to disconnect the power cord from the server.*

2. Ensure you have a clean and stable working environment. Avoid dust and dirt because contaminants may cause malfunctions.
3. Ground yourself properly before touching any system component. A discharge of static electricity may damage components. Wear a grounded wrist strap if available.

Installing Procedures

The followings are prerequisite to be installed.

- 3.5" HDD(s)
- Power Supply Unit(s) (Pre-installed)
- System Fans (Pre-installed)
- Server Board (Pre-installed)
- HDD Backplane (Pre-installed)

> ⚠ *1. Some components are already pre-installed. Simply properly connect the relavant cables before or after installation. See the Quick Installation Guide for more details.*
> *2. Refer to the user manual of the server board you use for instructions on how to install server board components.*

English

3.1 Server Top Cover

Removing the Server Top Cover

1. Before removing the top cover, power off the server and unplug the power cord.
2. The system must be operated with the chassis top cover installed to ensure proper cooling.

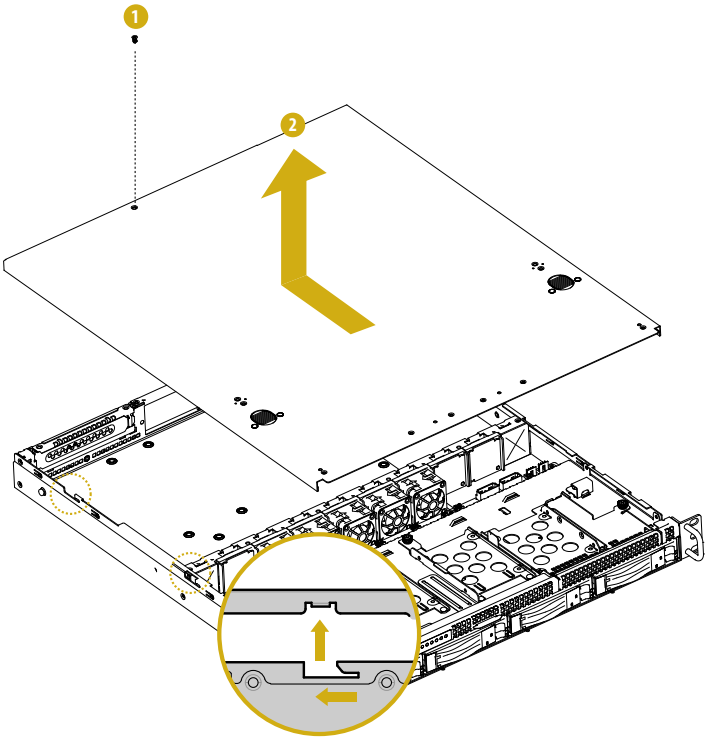

1. Remove the screws that secure the top cover to the chassis.
2. Push the top cover toward the rear of the chassis to remove the cover from the locked position.
3. Lift up and remove the top cover.

Installing the Server Top Cover

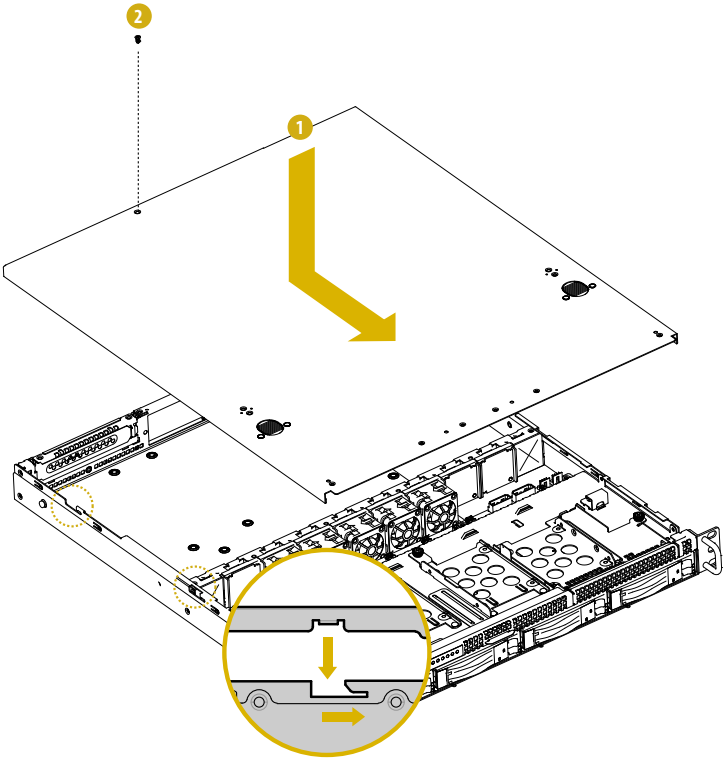

1. Lower the top cover on the chassis, making sure the side latches align with the cutouts.
2. Slide the top cover toward the front.
3. Secure the top cover with the screws.

3.2 Hard Drive

Removing 3.5" Hard Drive Trays from the Chassis

1. Press the locking lever latch on the drive tray to unlock the retention lever.
2. Rotate the lever out and away from the module bay and pull the hard drive out of the HDD tray.

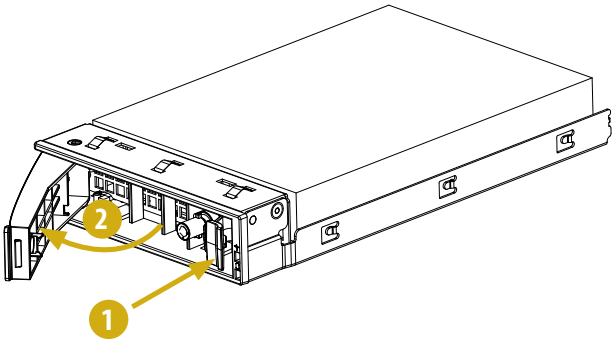

Installing a 3.5” Hard Drive to the Hard Drive Tray

1. Place the 3.5" HDD into the tray with the printed circuit board side facing down. Carefully align the mounting holes in the hard drive and the tray.
2. Secure the hard drive using the four screws.
3. Slide the drive tray into the HDD bay until the drive is fully seated.
4. Push in the locking lever to lock the HDD tray into place.

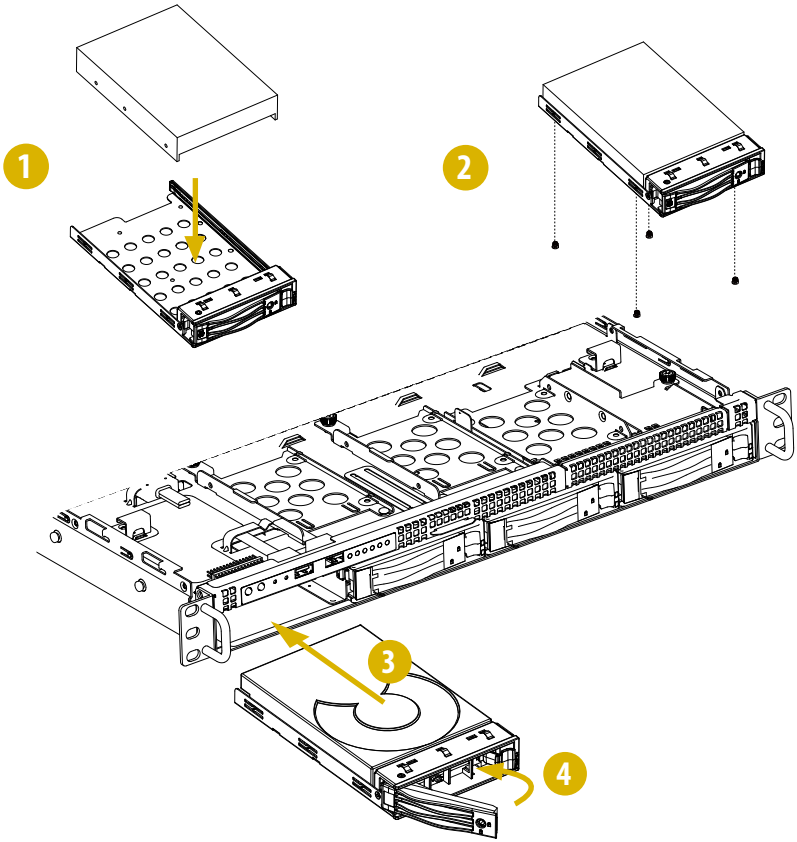

3.3 Power Supply

Installing and Removing the Power Supply

Before replacing the power supply, power off the server, unplug the power cord, and disconnect all wiring from the power supply.

The 1U4LW-SPSU system supports single PSU only.
The 1U4LW-RPSU system can accommodate two AC or two DC power supplies in the bay at the rear of the chassis. Each unit provides up to 300 Watts of power. One power supply is required for full load operation, with the other power supply purely as a redundant, load-sharing backup. It can be removed without affecting system operation.

Installing the Power Supply Unit

1. Align the power supply unit with the power supply slot. Ensure that the LED appears on the lower right when you are installing the power supply unit.
2. Carefully slide the PSU all the way into the power supply bay until it clicks into place.

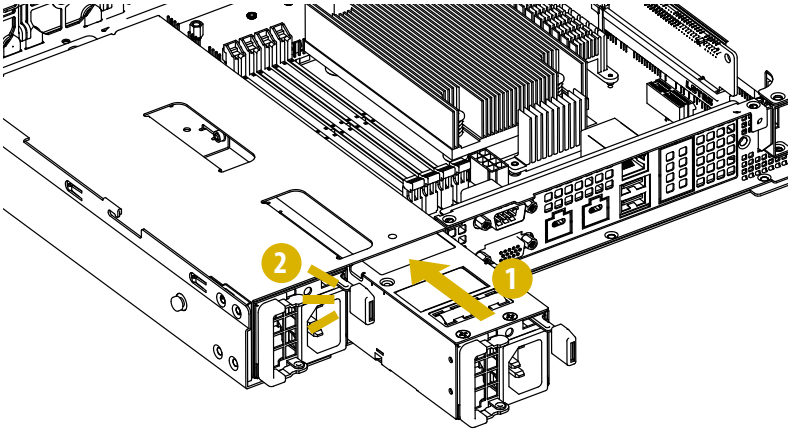

Removing the Power Supply Unit

To remove a failed power supply, identify the failed power supply by checking the power supply LEDs on the PSU.

1. Hold onto the power supply handle while pressing the locking lever towards the power supply handle.*
   **The illustration is for references only. The actual PSU type may be slightly differnet by models.*
2. Pull to remove the power supply from the chassis.

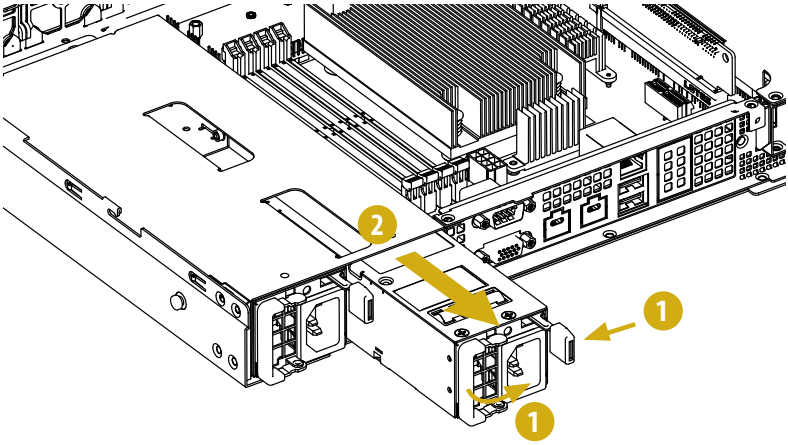

1. Before replacing the power supply, power off the server, unplug the power cord, and disconnect all wiring from the power supply.
2. In a redundant system, you do not need to power down the server.

3.4 System Fan

Replacing the Simple-Swap Fan

1. Press and hold the clip on the fan.
2. Press and hold the clip on the middle fan.

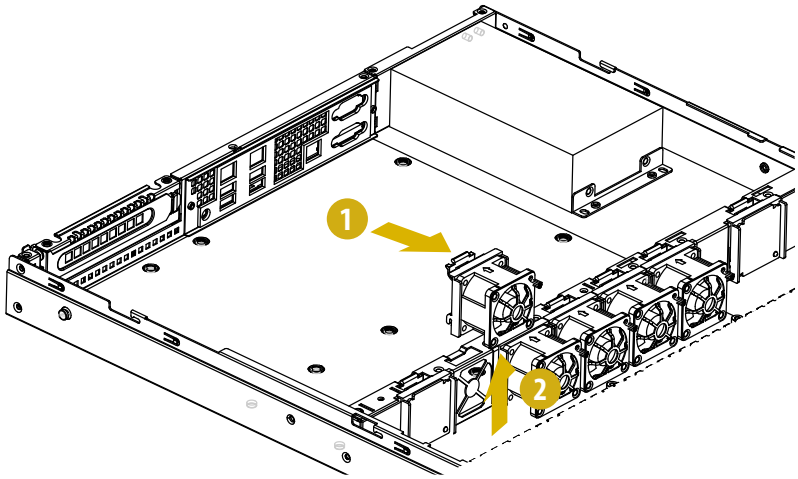

3.5 Backplane

Each barebone system supports one 3.5-inch HDD backplanes. The SATA backplanes serve as the interfaces between the motherboard and the HDDs.

> *Before removing and installing the backplane, power off the server and unplug the power cord.*

Removing the Backplane

1. Remove all of cables connected to the backplanes.
2. Remove all 3.5" HDD trays.
3. Loosen the securing screws on the backplane bracket.
4. Lift the backplane bracket up from the chassis. Hold the backplane only by the edges.

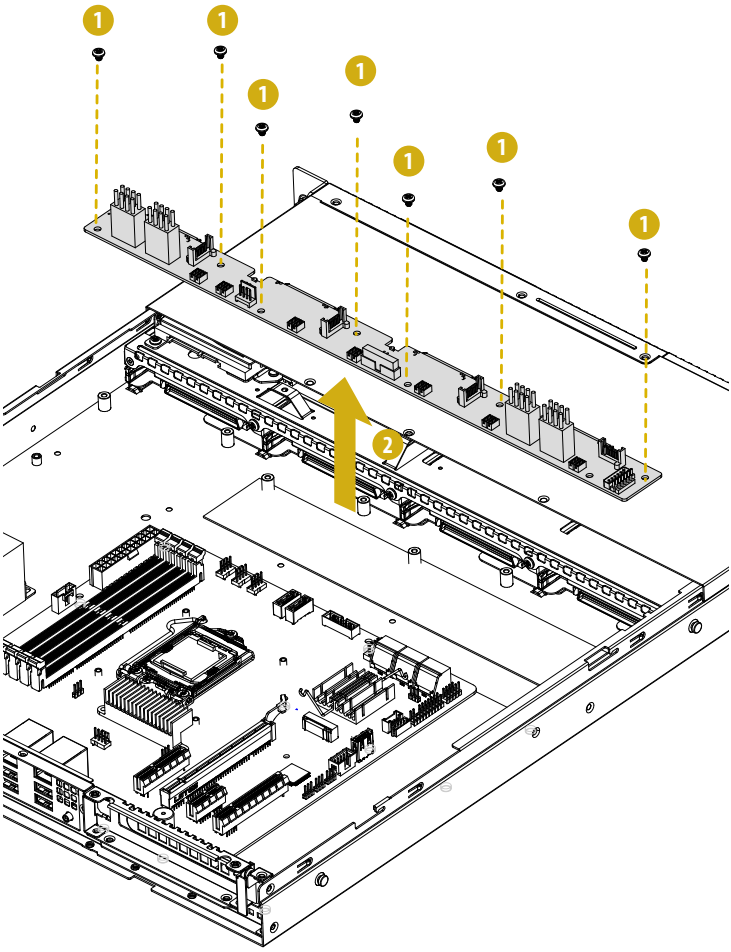

3.6 Server Board

Follow the steps below to install the server board to the chassis.

1. Hold the server board only by the edges.
2. Gently place the server board into the chassis. Sit the server board on the server board tray.
3. Position the server board in the server system. Align mounting holes of the server board to the standoff on the chassis.
4. Affix the screws clockwise into the mounting holes in all of the corners of the server board.

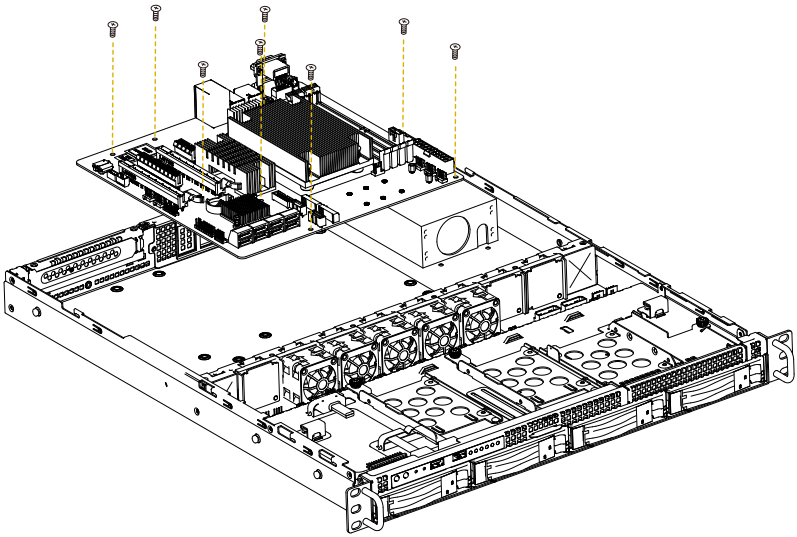

1. Do not over-tighten the screws! Doing so may damage the motherboard.
2. Refer to the user manual of the server board you use for instructions on how to install and remove the server board components and how to use its setup utility.

3.7 Add-on Card

1. *You can install an add-on card to the chassis only when you have a riser card installed on the server board.*
2. *Before installing the add-on card, power off the server and unplug the power cord.*

Removing the Riser-Card Bracket from the Chassis

1. Remove the screws securing the riser-card bracket on the chassis. Keep the screws for later use.
2. Lift up the riser-card bracket.
3. Remove the screw securing the blanking plate on the bracket.
4. Slide the blanking plate out sideways.

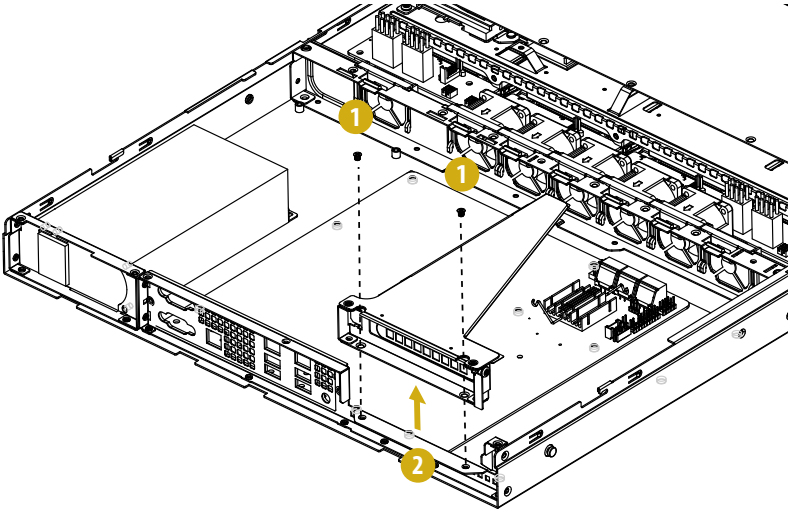

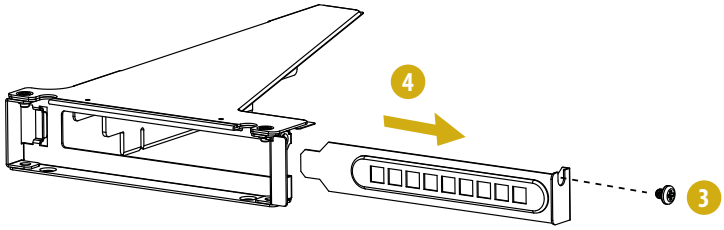

Installing the Add-on Card

1. Install the add-on card to the riser-card bracket.
2. Secure the add-on card to the bracket with a screw .
3. Align the riser-card assembly with the openings of the chassis.
4. Attach the assembly to the chassis with the screw that was previously set aside.

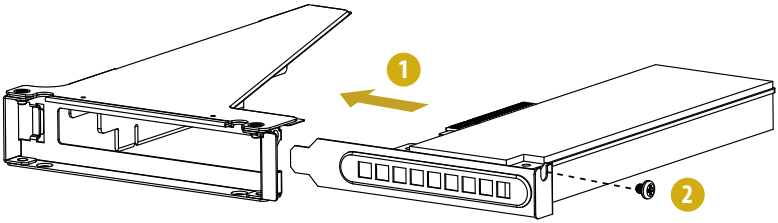

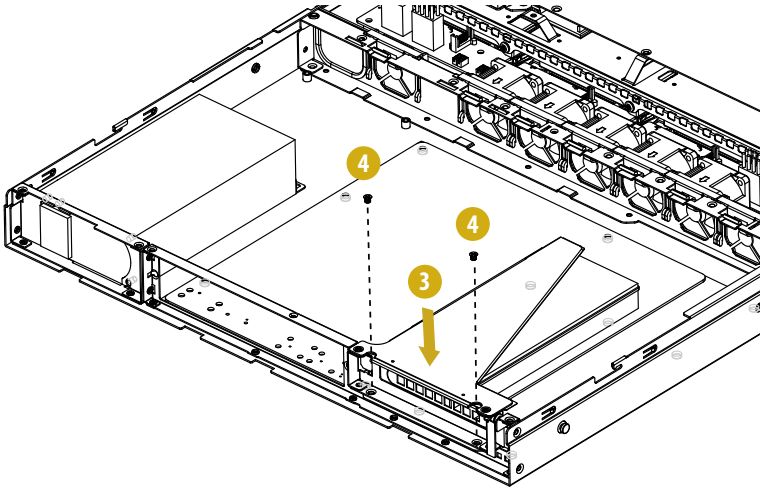

3.8 Air Duct

1. If an add-on card is already installed, remove the add-on card assembly from the chassis before installing the air duct. If an add-on card is not installed yet, install the add-on card first. Please see the chapter entitled "Add-on Card" for more instructions.

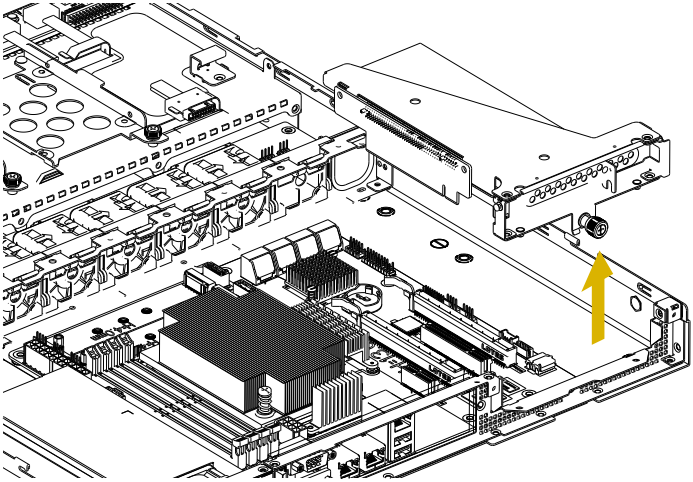

2. **1U4LW-X470 Series only**:
   Position the fan duct for the riser card in the chassis and carefully insert the tab on the air duct into the groove on the fab bar.

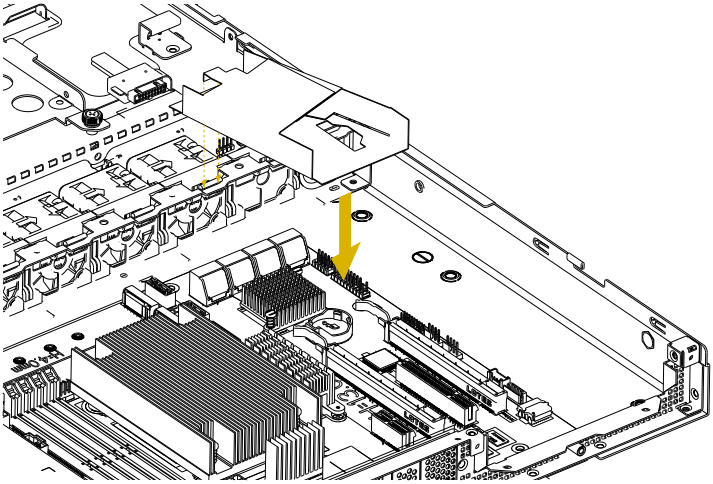

3. Then install the add-on card assembly to the chassis.

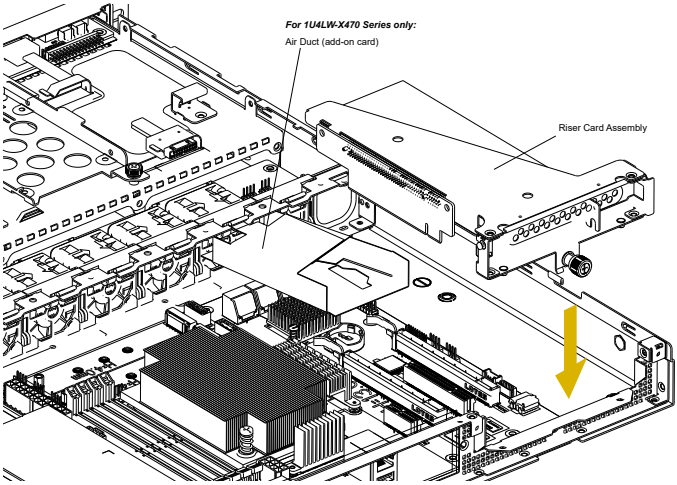

4. **1U4LW-X470 Series only**:
   Make sure the add-on card assembly is well aligned with the air duct.

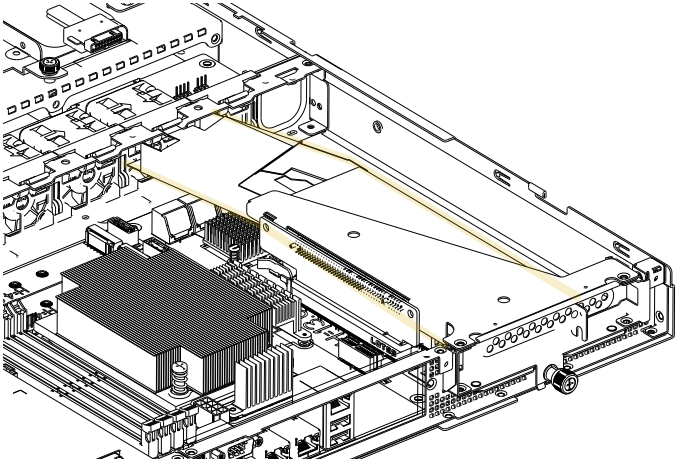

5. Align the air duct over the heat sink and carefully lower the air duct in place.

1U4LW-X470 Series

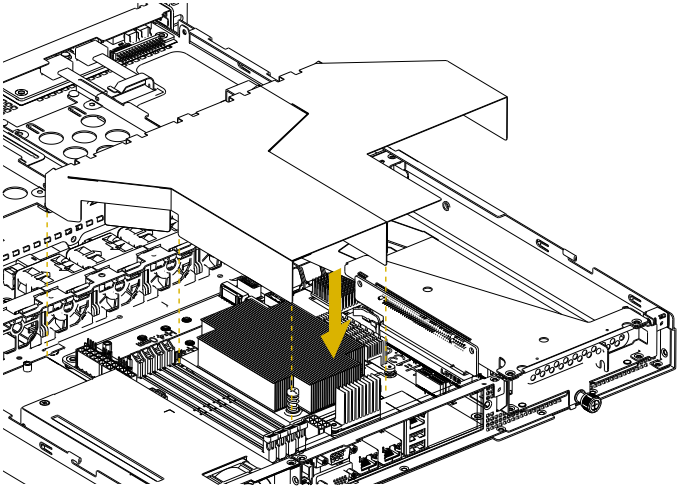

1U4LW-X570 Series

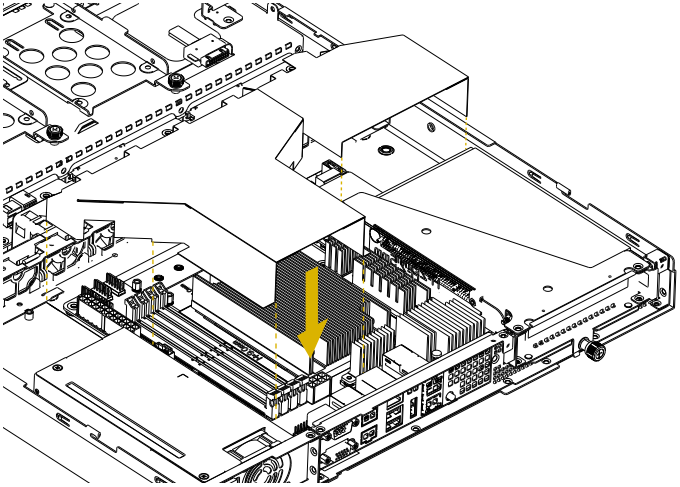

Chapter 4 Chassis Cables

This section lists supported cables for your chassis system.

Cable type and quantity vary depending on the server board that comes with your system.

1. BPB SATA Cable

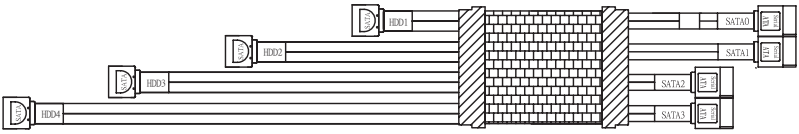

Backplane MB

2. Fan Cable

FAN MB

3. 2.5” SATA HDD Cable Type 1

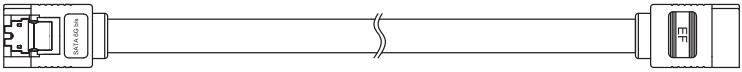

2.5” SATA HDD MB

4. 2.5” SATA HDD Cable Type 2

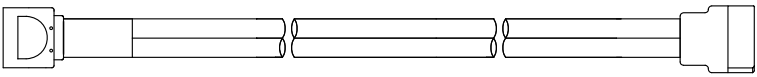

MB 2.5” SATA HDD or Slim ODD

English

5. USB Cable

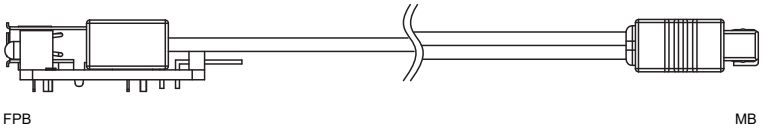

6. Aux_Panel Cable

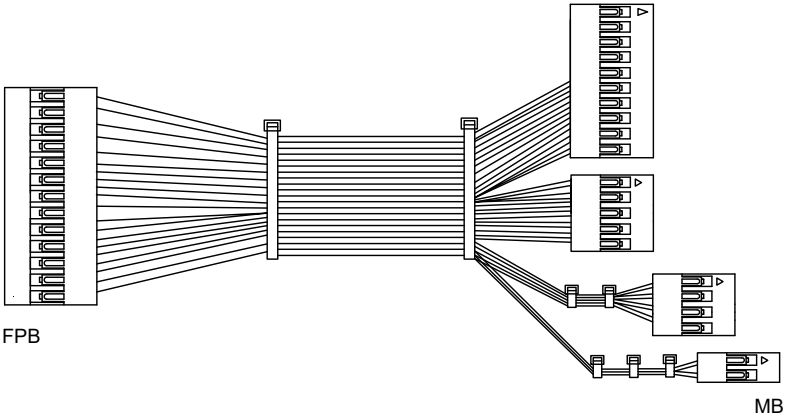

Chapter 5 Board Specifications

5.1 Hard Drive Backplanes (BPB)

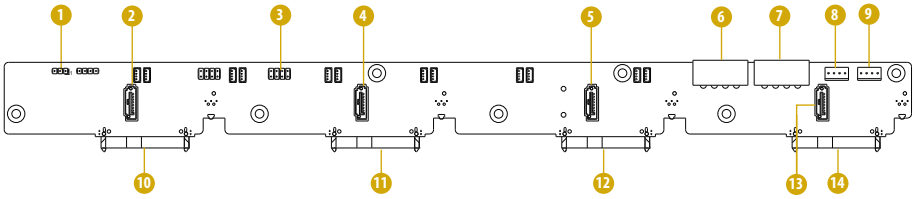

No.	Description
1	SGPIO Disabled/Enabled Jumper (JP1)
2	SATA Connector (SATA_1)
3	SGPIO Code Programming Pin (CN6)
4	SATA Connector (SATA_2)
5	SATA Connector (SATA_3)
6	SATA HDD Power Connector (CN2)
7	SATA HDD Power Connector (CN1)
8	Slim ODD Power Connector (CN4)
9	Slim ODD Power Connector (CN3)
10	SATA Hot-swap Connector
11	SATA Hot-swap Connector
12	SATA Hot-swap Connector
13	SATA Connector (SATA_4)
14	SATA Hot-swap Connector

Jumper Setup

The illustration shows how jumpers are setup. When the jumper cap is placed on the pins, the jumper is "Short". If no jumper cap is placed on the pins, the jumper is "Open". The illustration shows a 3-pin jumper whose pin1 and pin2 are "Short" when a jumper cap is placed on these 2 pins.

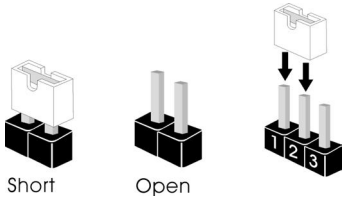

SGPIO Disabled/Enabled Jumper (3-pin JP1)	SGPIO Disabled	SGPIO Enabled (Default)

Pin Definitions

SATA HDD Power Connectors (CN1) (CN2)	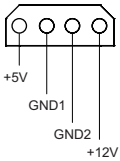	The 4-pin connectors provide power to the backplane.
SATA Connectors (SATA_1) (SATA_2) (SATA_3) (SATA_4)		These connectors are used to connect the SATA port on the motherboard.
Serial General Purpose Input/Output Header (8-pin CN6)	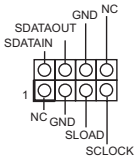	This header supports Serial Link interface for onboard SATA connections.

Slim ODD Power Connectors (4-pin CN3) (4-pin CN4)	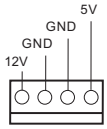	The 4-pin connectors provide power to the slim ODD.

5.2 Front Panel Board (FPB)

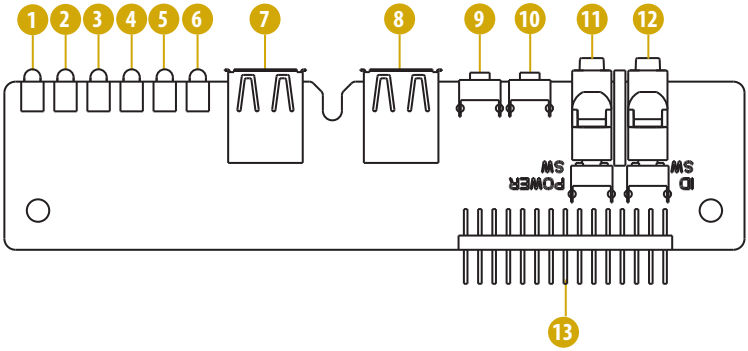

No.	Description
1	System Healthy LED (SYS_LED)
2	HDD Status LED (HDD_LED)
3	Mezz LAN4 LED (LAN4_LED)
4	Mezz LAN3 LED (LAN3_LED)
5	Mezz LAN2 LED (LAN2_LED)
6	Mezz LAN1 LED (LAN1_LED)
7	USB 3.0 Port (USB_2)
8	USB 3.0 Port (USB_1)
9	Reset Buttom (RST_SW)
10	NMI Buttom (NMI_SW, for 1U4LW-X470 only)
11	Power Puttom with LED (Power_SW)
12	UID Buttom with LED (ID_SW)
13	Front Panel Header (AUX_PANEL1)

Front and Auxiliary Panel Header
(26-pin AUX_PANEL1)

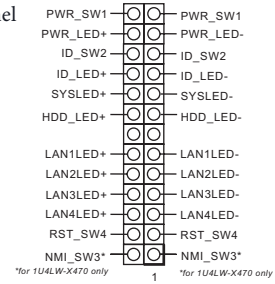

This header supports multiple functions on the front panel.

English

Appendix A

Installing the CPU (AMD AM4 Socket)

1

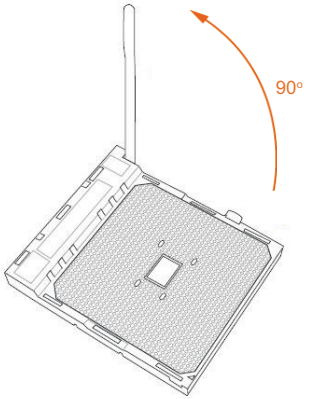

2

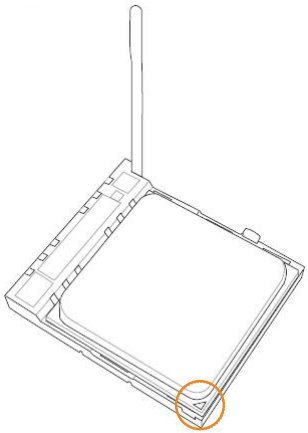

3

Installing the CPU Heatsink

1

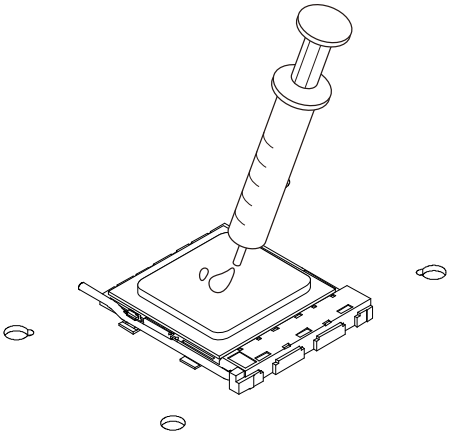

2

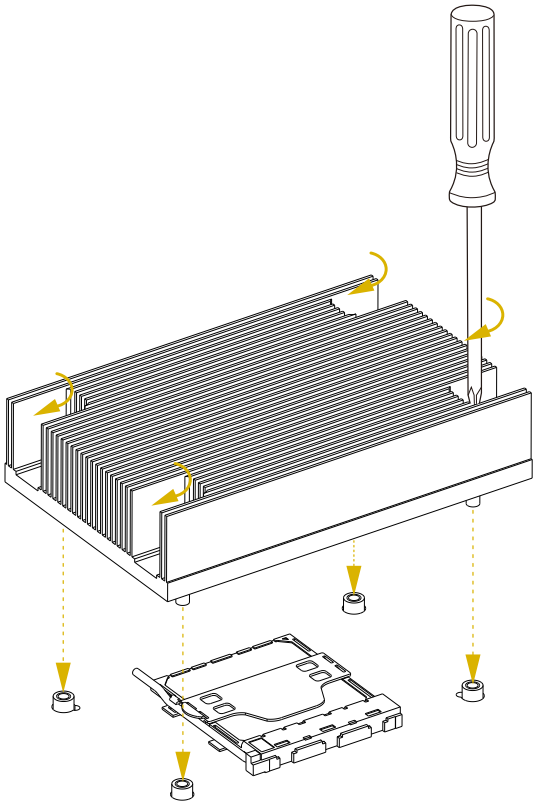

Please be aware of the correct direction when you install the CPU heatsink. Make sure the the arrow on the CPU heatsink is pointing to the opposite side of the system fan.

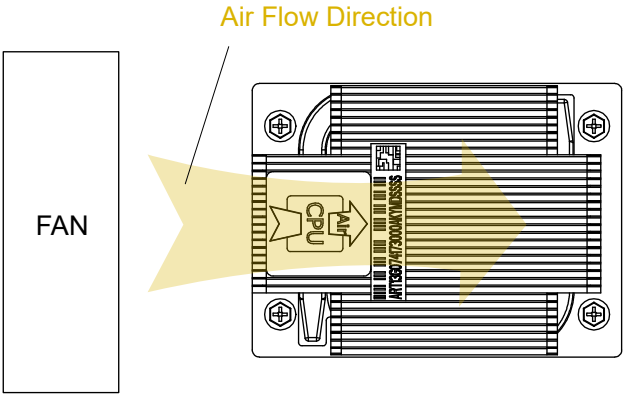

Installation of Memory Modules (DIMM)

The DIMM only fits in one correct orientation. It will cause permanent damage to the motherboard and the DIMM if you force the DIMM into the slot at incorrect orientation. For more information about DIMM installation, please refer to the User Manual that comes with the serverboard you use.

1

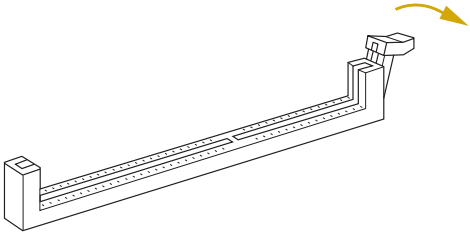

2

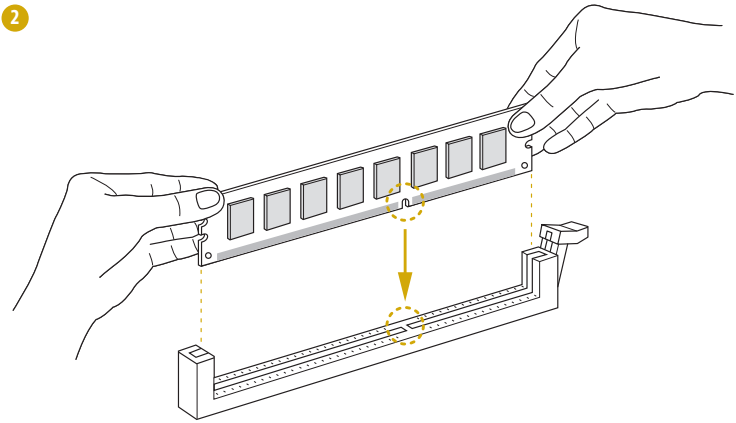
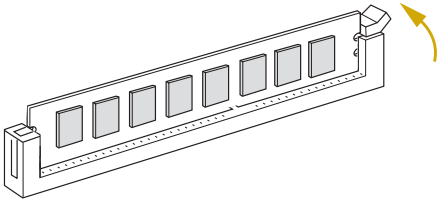
3