AXOR

hansgrohe

AXOR One
Overhead shower 75 1jet EcoSmart with shower arm
Surfaces: **matt black** Art. no. : **48490670**

Description

product features

- Consists of: overhead shower, shower arm
- Shower head size: 73 mm
- Spray pattern: PowderRain
- spout 116 mm long
- Shower arm length 85 mm
- Ball-joint: overhead shower angle adjustable
- maximum flow rate 8,7 l/min at 3 bar
- Spray face: metal
- overhead shower removable for cleaning
- Installation: wall
- Connection thread ½"

Article Details

Price excl. VAT £ 299.17

Technology

EcoSmart

Quick Clean

Design awards

DESIGN AWARD 2021

Product image

Scale drawing

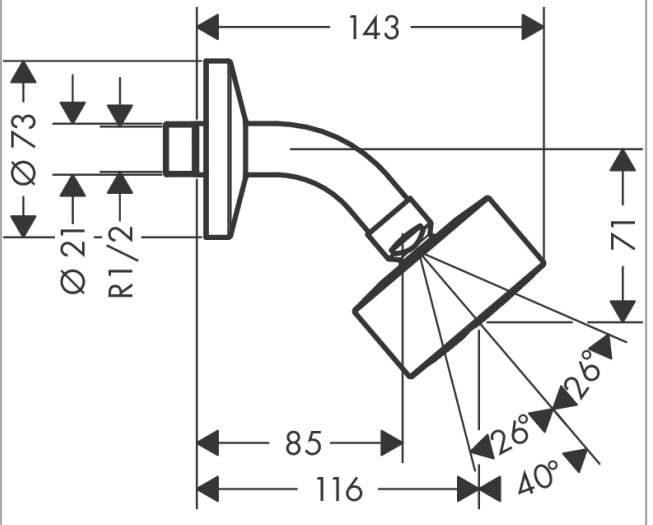

Flowchart

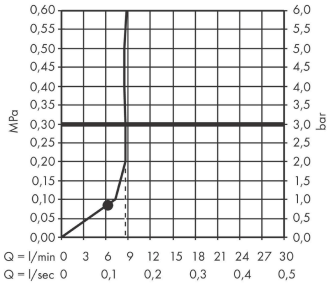

① With flow limiter
② Without flow limiter