BENQ PD2706QN
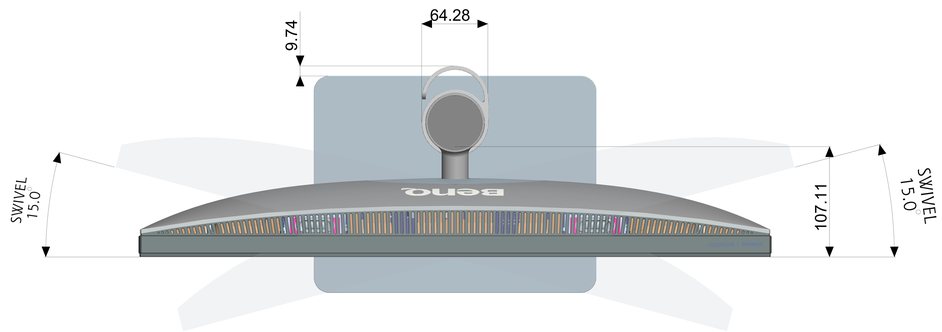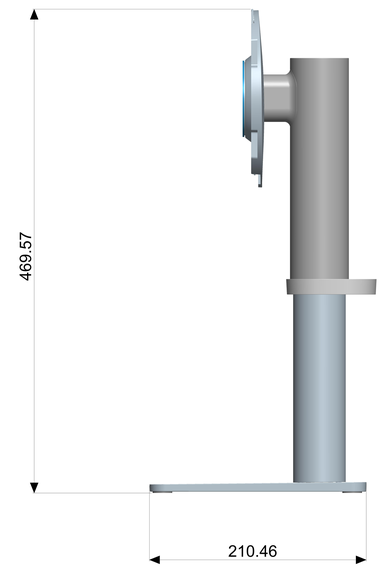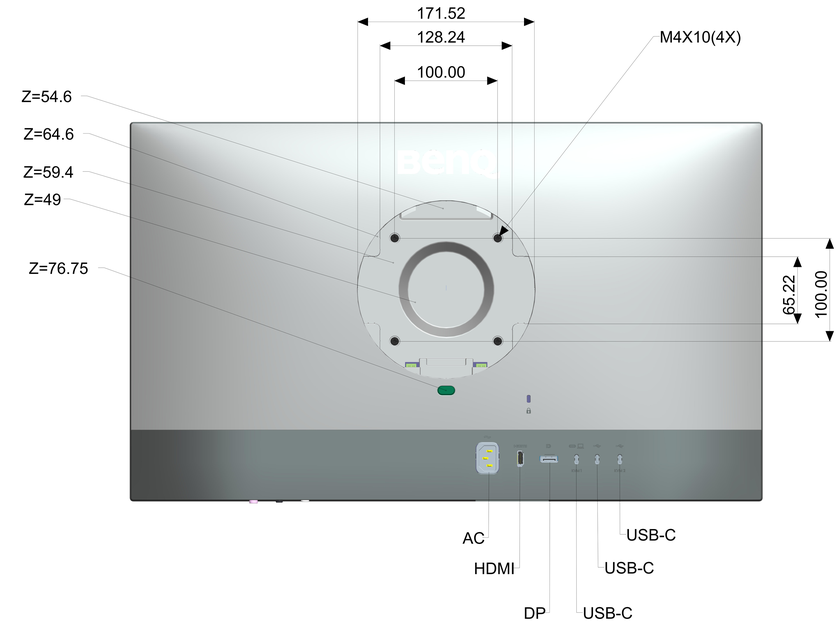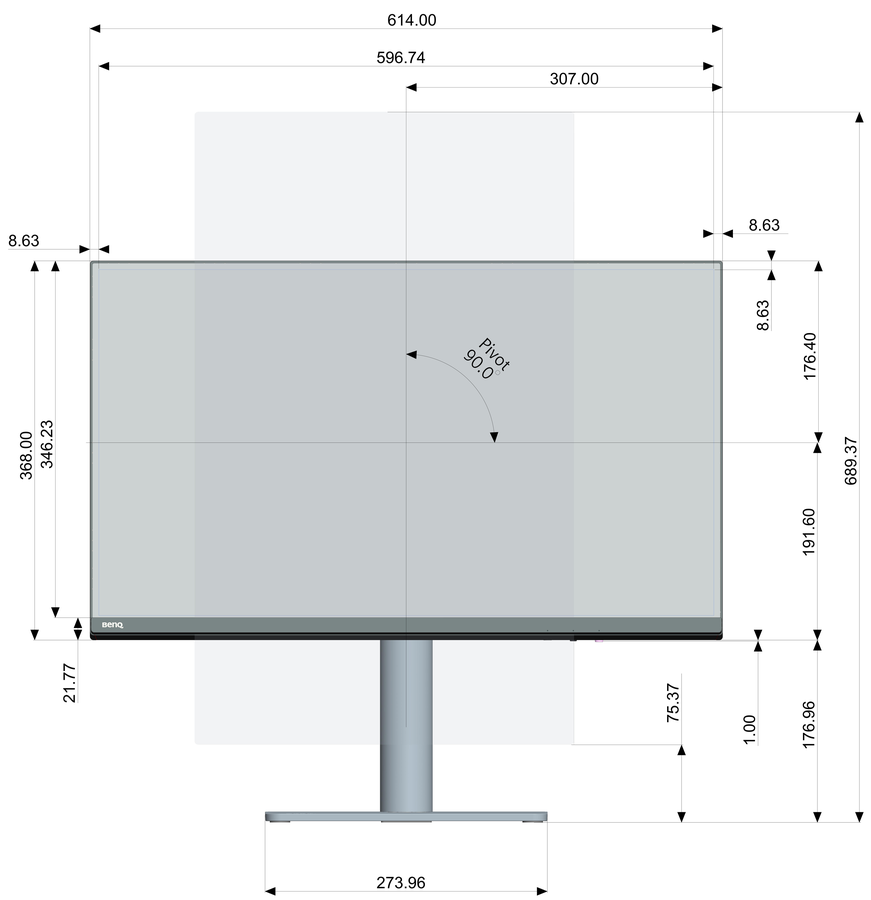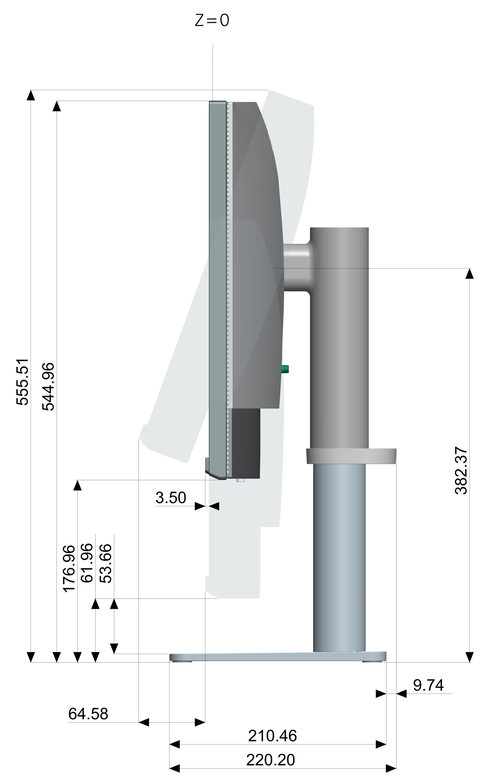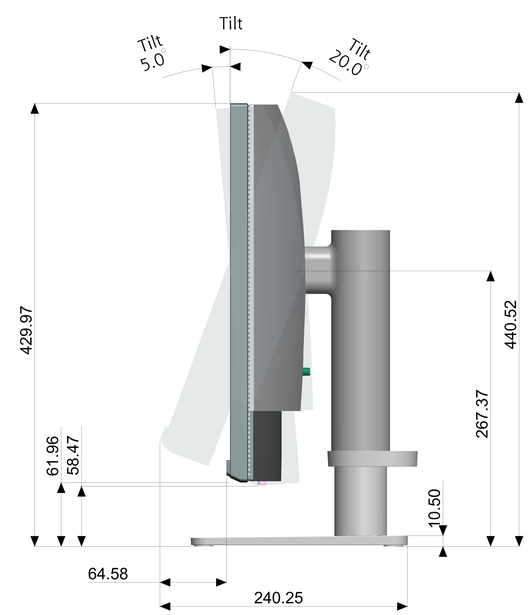
Unit : mm
Dimension : Normal
Drawing : Not to Scale