Sharkoon

SHARK LIGHTS

RGB PWM

Manual

Safety Instructions

This device is to be used as a PC case fan inside a PC case or as a fan for CPU coolers or PC radiators. For your own safety, be sure to follow the instructions below before using the device. If the product is damaged due to improper use or non-compliance with the safety instructions, the manufacturer's guarantee will be void.

CAUTION!

- Be aware of the risk of injury by touching rotating parts. Do not insert any foreign objects between these parts, as this could damage the fan.
- Never bring the fan into contact with moisture or liquids.
- If you need to clean the fan, use a dry cloth.
- Do not use compressed air for cleaning the fan. This could create an electrical charge from the spinning rotor and result in damage to components.
- Only connect the fan to the designated connectors on the mainboard as shown or described in this manual. If necessary, use the operating manual of your mainboard to clearly identify the correct connectors.

Specifications

General

Fan Speed	500 – 1,700 rpm ± 10 %
Bearing Type	Fluid Dynamic Bearing
Max. Airflow	89 m^3/h
Max. Air Pressure	1.10 mmH_2O
Max. Noise Level	24.8 dB(A)
MTBF	Min. 50,000 Hours
Illumination	20x Addressable RGB LED
Color Versions	Black, White
Weight incl. Fixed Cable	140 g
Dimensions (L x W x H)	120 x 120 x 25 mm

Cable and Connectors

Fan Connector	4-Pin PWM
LED Connector	4-Pin (5V-D-coded-G)
Fan Cable Length	600 mm
LED Cable Length	600 mm

Electrical Specifications

Rated Voltage (Fan)	12 V
Rated Voltage (LEDs)	5 V
Rated Current (Fan)	0.14 A
Rated Current (LEDs)	0.9 A
Rated Power (Fan)	1.68 W
Rated Power (LEDs)	4.5 W
Start Voltage	7 V

Package Contents

- SHARK Lights RGB PWM, Set with Fan Screws

Connect Fan and LED

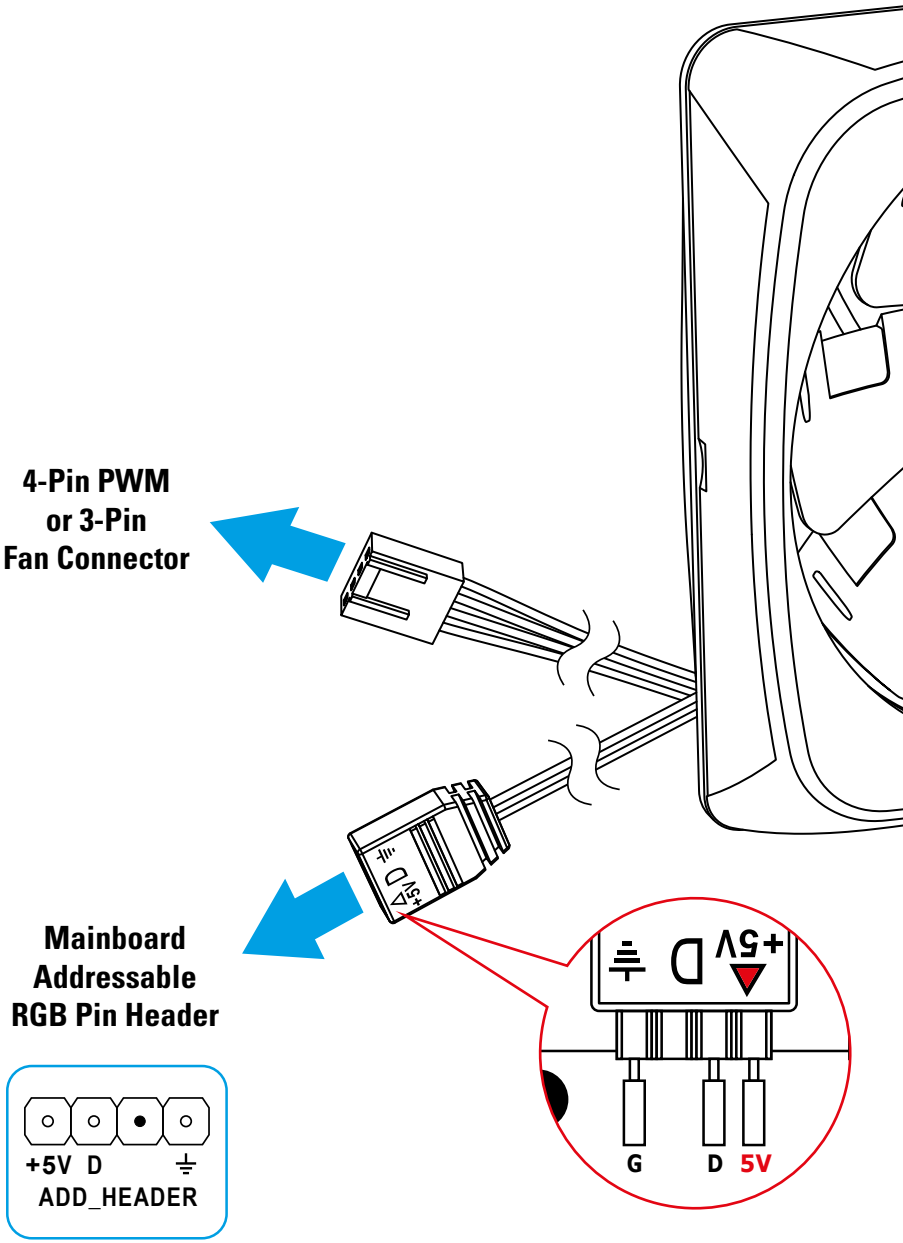

Install Fan (with screws from back)

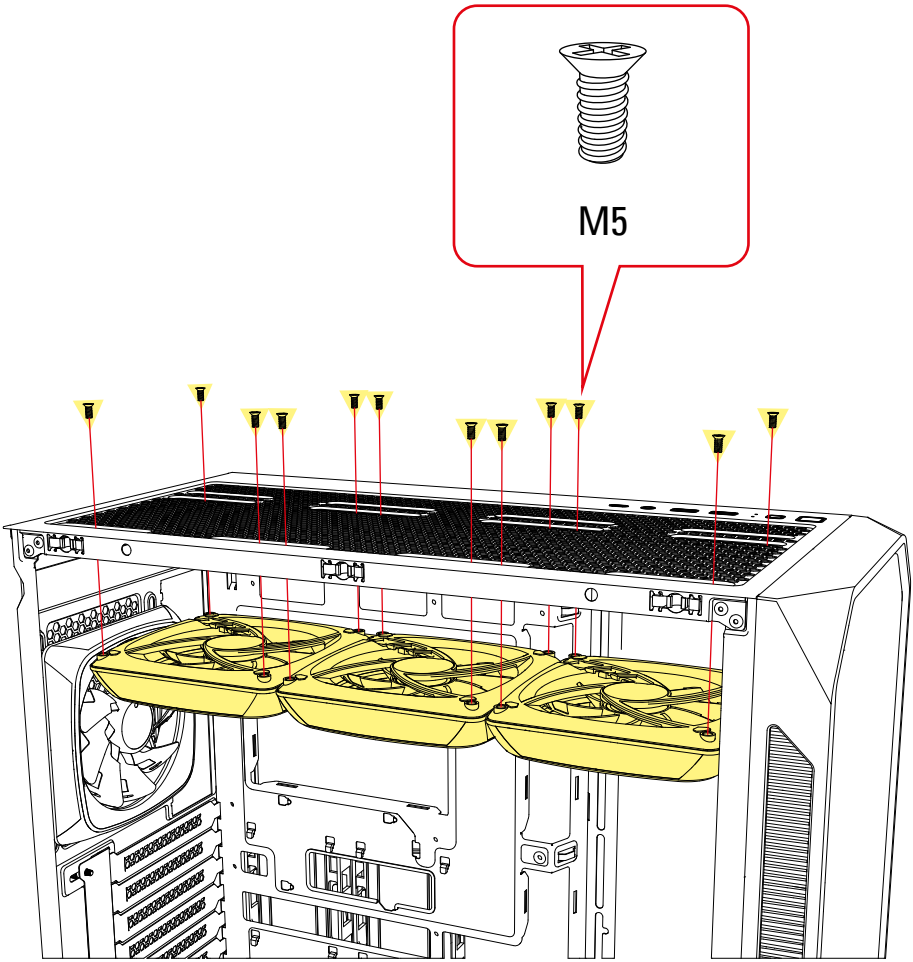

Install Fan (with screws from front)

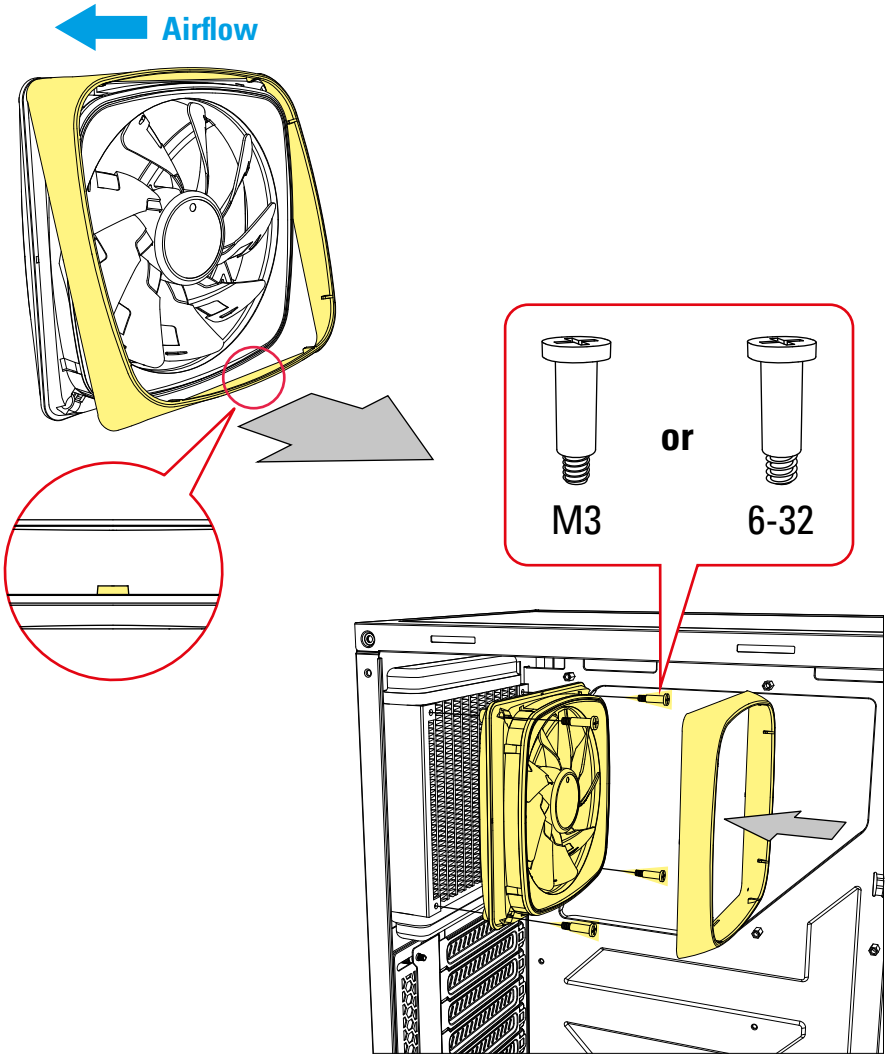

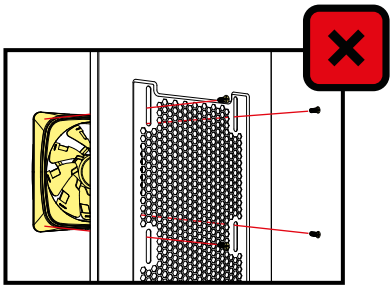

Note

Legal Disclaimer

For potential loss of data, especially due to inappropriate handling, Sharkoon assumes no liability.

All named products and descriptions are trademarks and/or registered trademarks of the respective manufacturers and are accepted as protected.

As a continuing policy of product improvement at Sharkoon, the design and specifications are subject to change without prior notice. National product specifications may vary.

All rights reserved especially (also in extracts) for translation, reprinting, reproduction by copying or other technical means. Infringements will lead to compensation. All rights reserved especially in case of assignation of patent or utility patent. Means of delivery and technical modifications reserved.

Disposal of your old products

Your product is designed and manufactured with high quality materials and components, which can be recycled and reused.

When this crossed-out wheeled bin symbol is attached to a product, it means the product is covered by the European Directive 2012/19/EU.

Please be informed about the local separate collection system for electrical and electronic products. Please act according to your local rules and do not dispose of your old products with your normal household waste. The correct disposal of your old product will help prevent potential negative consequences to the environment and human health.

Follow us on social media!

Facebook

Instagram

YouTube

TikTok

X

Sharkoon Technologies GmbH
Grüninger Weg 48
35415 Pohlheim
Germany

© Sharkoon Technologies 2024