ENN2853COW Combi Bottom

Intelligent FreeStore®: Store any fresh item anywhere in the fridge

Store food in whichever area of the refrigerator you choose. It will stay just as fresh wherever you put it because the intelligent FreeStore® system distributes cooled air evenly.

Never defrost with this energy saving fridge freezer

This fridge freezer features the FrostFree system, so it will never frost up again. In addition, it also has an environmentally friendly A+ energy rating.

Look into every corner of your fridge freezer with modern LED light

Check out the contents of your fridge freezer using premium LED technology. This energy-saving lighting system gives you excellent visibility.

More Benefits :

• Drawer with humidity control to keep that fresh texture

Features :

• Fridge capacity (gross): 197 litres
•Freezer capacity (gross): 76 litres
•Frost free
•Automatic defrost in fridge
•Adjustable temperature control
•Intensive cooling with auto switch off - for fast chilling of fresh food
•2 salad drawers
•Electronic temperature controls with LCD display
•1 half width sliding door shelf
•3 full width door shelves including bottle shelf
•1 full width covered dairy compartment
•4 star freezer
•Visual and acoustic high temperature alarm
•3 freezer drawers

Technical Specs :

• Dimensions (mm) (HxWxD) : 1772x540x549
•Height (mm) : 1772
•Width (mm) : 540
•Depth (mm) : 549
•Dimensions : 1780x560x550
•Dimensions SBS : xx
•Installation : BI Slide Door
•Door hinges : Right &Reversible
•Min. ambient temp, C : 10
•Cord Length : 2.4
•Voltage : 230-240
•Frequency : 50
•Energy efficiency (2010/30/EC) : A+
•Annual energy consumption, kWh : 291
•Rising time, h : 21
•Climate Class (2010/30/EC) : SN-N-ST-T
•Freezing capacity, kg/24h : 10
•Noise level, dB(A) : 39
•Gross volume Fridge/Freezer : 197/76
•DK_FF_NetVolume_capacity : 192/61
•Colour : White
•Number of thermostats : 2
•Lamps, refrigerator : 1, Internal. LED, Side
•Lamps, freezer : None
•Number of drawers : 3 Full Width
•Flaps : No
•Equipment Zero : None
•Product Partner Code : All Open

Product Description :

Electrolux TwinTech® FrostFree technology with FreeStore® guarantees an optimal humidity level in the refrigerator. Food keeps its fresh taste and texture for much longer thanks to the independent air cooling systems of the fridge and the frost free freezer. 177cm high in-column 70:30 split fridge freezer, with touch control electronics, LED lighting, FreshZone, Freestore cooling system, 3 freezer drawers, and slider fixing.
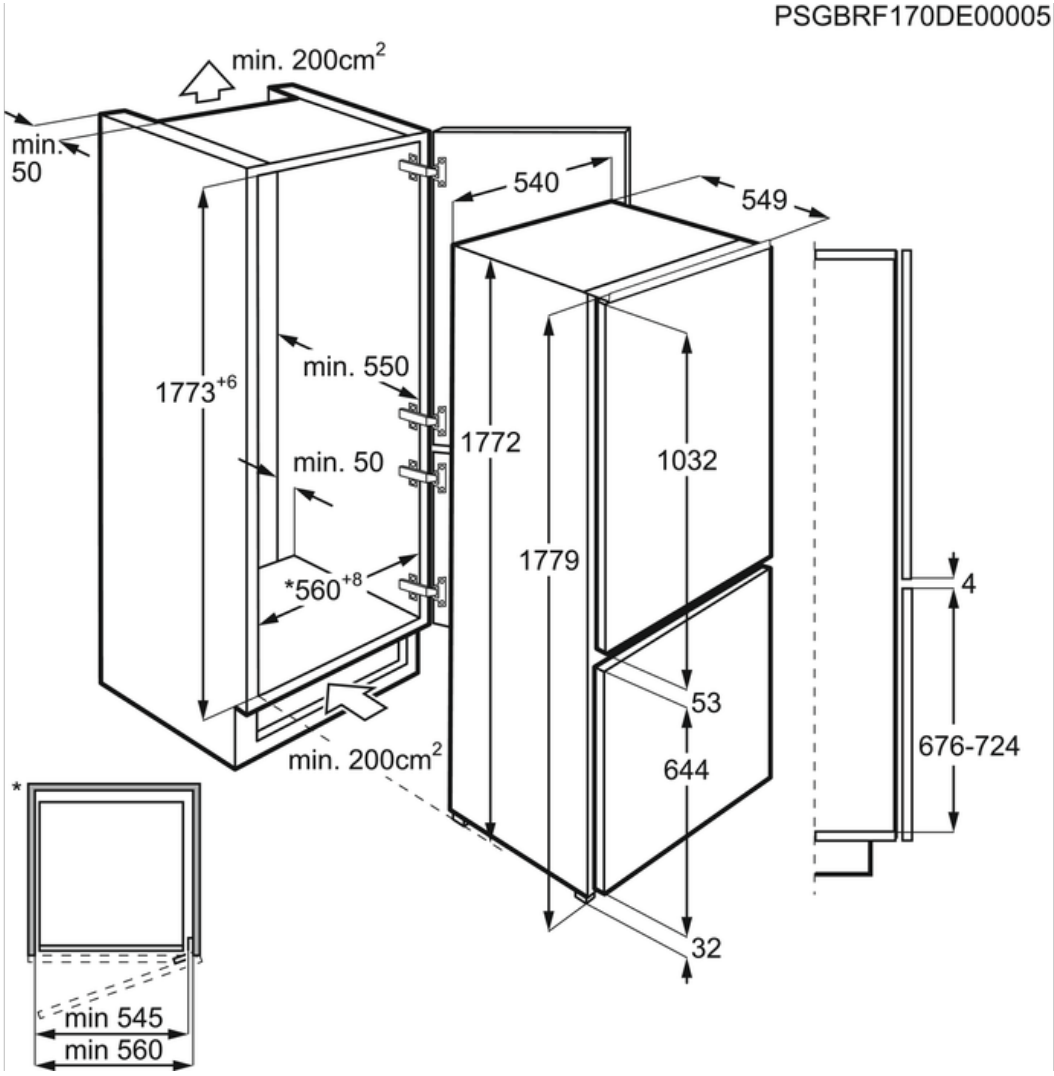
ENN2853COW Combi Bottom