DJPOWER®

[PRO STAGE EFFECTS]

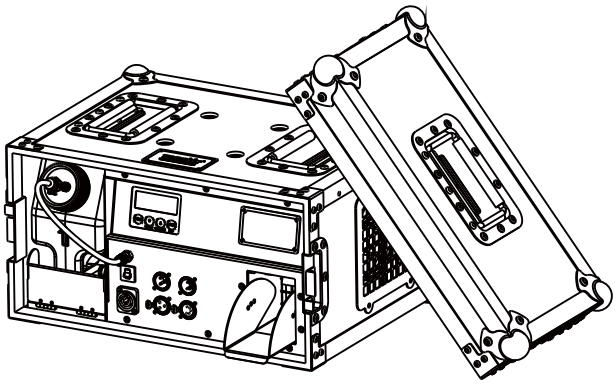

# H-3 USER MANUAL

# PRO HAZE MACHINE

GUANGZHOU DJPOWER ELECTRONIC TECHNOLOGY CO.,LTD

## ◆ Foreword

Thank you very much for choosing DJPOWER H-3 Pro Haze Machine .
Before start operating, we strongly suggest you to read the user manual carefully. Following the instructions here will ensure your safety while operating the machine, easily achieve the best effect, as well as understand the right way to care for and maintain the machine, hence to prolong the product life cycle.

## ◆ Introduction

H-3 is a top of the range water-based haze machine designed for the highly demanding professional market. It comes pre built-in aluminum alloy flight case and can be stacked one on another. Robust yet compact size and lightweight, its ability to produce exceptionally fine atmospheric haze in a short period of time while operating at low noise levels makes it an ideal choice for rental houses, high-end bars, small shows, theatres and more.

## ◆ Features

1. Continuous output even and light haze;
2. Output 1-100% precisely adjustable;
3. Independent variable haze and fan control;
4. Powerful fan with low noise ;
5. Low fluid consumption;
6. New heating system only 50 seconds heat-up time ;
7. Advanced No-Fluid protection;
8. Compact size, and convenient for transportation;
9. Aluminum alloy flightcase;
10. Built-in Omega mounting hole;
11. Angle-adjustable haze outlet;
12. Anti-slip fluid tank;
13. Anti-leaking fluid system with quick-connect fittings ;
14. Anti-loose power plug;
15. Built-in LCD control, 3-pin and 5-pin DMX control;
16. Water-based fluid, no burnt odor, no harm to the optic;
17. Please use DJPOWER professional haze fluid PRO-C or PRO-J.

## ◆ Safety operation

- Keep the fixture dry. For indoor and outdoor use.
- Use grounded electrical outlet. Prior to use, make sure that unit is installed at the rated voltage.
- Turn off or unplug when not using it.
- This machine is not water-proof. Please keep it away from moisture and water. If moisture, water, or fluid gets inside the housing, stop using it.
- No user serviceable and modifiable parts inside. Do not disassemble the housing and do any modification, otherwise it might cause damage to the unit or danger of burning.

- For adult use only. Fixture must be installed out of the reach of children. Never leave the unit running unattended. Keep it away from fire, combustible and flammable materials.

- Position the machine in well-ventilated area. Please leave about 50cm spaces surrounding the unit.

- Please do not use the fixture under high temperature.
  Never add flammable liquids of any kind(oil, gas, perfume)to the fog liquid.

- If something wrong happen while using, please stop the fixture immediately, cut off the power, and check the fog liquid amount, fuse, power cable and power plug. If problem could not be resolved, please contact with your dealer.

- Use only DJPOWER high-quality PRO-C or PRO-J fog liquid.

- Never drink liquid. If it is ingested, call a doctor immediately for any discomfort. If liquid comes in contact with skin or eyes, rinse thoroughly with water.

◆ **Unpackaging and inspection**

Immediately upon receiving the machine, carefully unpack the carton, check all content to ensure that all parts are present and have been received in good condition. If any parts appear damaged or mishandled from shipping, please do not power on the machine. Contact with the shipper immediately.

◆ **What is included**

1. 1 x H-3 PRO Haze Machine
2. 1 x Power Cord
3. 1 x User Manual

◆ **Installation**

1. After ensuring all the accessories are intact, position the machine on a flat surface, and open the cover of the road case in front.

2. Press the oil tank's quick connector by thumb and forefinger, and take it out quickly to disconnect the tube and the oil tank. Take out the tank and uncover the cap. Pour the liquid PRO-C or PRO-J into the tank carefully, then tighten the cap. Put the tank into the machine and push the connector lightly to connect the tube and oil tank.

3. Connect the Neutrik power cord to the machine. Please make sure the required and provided electricity voltage and the electricity outlet is grounded.

4. There is no ON/OFF power switch for this unit. When the power cord connects to the electricity outlet, the machine will immediately start heating up and in the standby mode, during this time, the LCD panel will display "WARMING UP"

5. It requires about 50s for heating up. When the process of heating up finishes,

the LCD display will show “READY TO Fazer”

◆ **LCD Control**

- LCD display has Chinese and English for alternative to cater to different customers’ demands.
- Please take note LCD control is void when the unit is connected to DMX.
- LCD display has 4 buttons., see below:

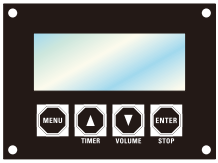


“ MENU ”: Enters/changes setting mode
“ UP/TIMER ”:Increase value; Timer mode
“ DOWN/VOLUME ”: Decrease value; haze output
“ ENTER/STOP ”:Enter or exit setting mode; STOP

◆ **Press ENTER button, there are nine pages in total, as following**

1. “READY to Fazer”： Machine finishes heating.
2. Interval Set: 5~200s
3. Duration Set: 5~200s
4. Timer out: 1%~100% haze output under TIMER mode
5. Volume out: 1%~100% haze output under VOLUME mode
6. Fan speed: 1%~100%
7. Fluid Sensor: ON or OFF
8. DMX 512 ADD: 1~512
9. Direct timer: Direct timer on/off after power on

Under any setting pages, press STOP to exit or return to the page one.

When the unit is working, press STOP to stop running and return to the page one. After enter into different setting pages, press UP and DOWN to change the value. When it is in the page one, press TIMER button to enter into timer mode.

◆ **DMX Control**

- When the unit is connected to DMX, LCD display will show the address value. In such case, press UP and DOWN button to change the address.

- There are two DMX channels.
  Channel 1: Fan output. 0~5 OFF; 6~255 increase
  Channel 2: Haze output. 0~5 OFF; 6~255 increase

◆ **Service and Maintenance**

1. Please use DJPOWER fluid. It will prolong the lifetime of machines. To avoid

danger, it is not allowed to take machine apart by unprofessional man. Neither to refit the machine.

2. Excessive dust, fluid residue and dirt will degrade performance and cause overheating. Remove dust from air vents with air compressor, vacuum or a soft brush. The casing could be cleaned by the damp cloth.

3. Before storing, run distilled water through the heating system to help avoid blocking the electric heating element.

4. It is recommended to run the machine on a monthly basis in order to achieve best performance and output condition.

5. All smoke machine will be blocked because of the inferior liquid or frequent use. Periodic maintenance is necessary for long term use. After 40 hours continuous working, please spray 10-15 times with the detergent composed of 35% vinegar and 65% distilled water.

6. Please properly operate the machine comply with user manual.

◆ **Technical Parameter**

| | |
|---|---|
| Model: | H-3 |
| Input Voltage: | AC 220 V~240 V, 50/60 Hz |
| Fuse: | 8 A/250 V |
| Total Power Consumption: | 1,100 W |
| Heat Up Time: | 50 s |
| Max Output Volume: | 12,000 cuft/min |
| Fluid Consumption Rate: | 83 min/L |
| Fluid Tank Capacity: | 3.5 L |
| Net Weight: | 16 kg |
| Gross Weight: | 18 kg |
| Machine Dimensions: | 425/390/242 mm |
| Packing Dimensions: | 515/475/330 mm |
| Consumable: | PRO-C 、 PRO-J |

◆ **Product Overview**

1. Flightcase
2. Quick Lock Lifting Hole
3. Fluid Container
4. Door Latch
5. Safety Door
6. Fluid Inlet
7. Breaker
8. Power Socket
9. 3-pin DMX Socket
10. 5-pin DMX Socket
11. Nozzle
12. LCD Display

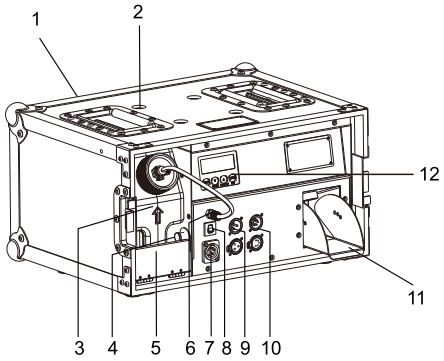

◆ **Instruction to Nozzle**

When the nozzle being fixed well, there are three adjustable angles.

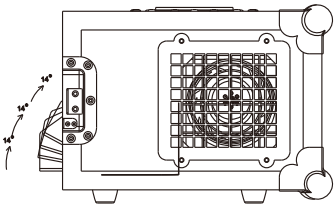

◆ **Schematic diagram of hook**

Fix hook seats with pliers

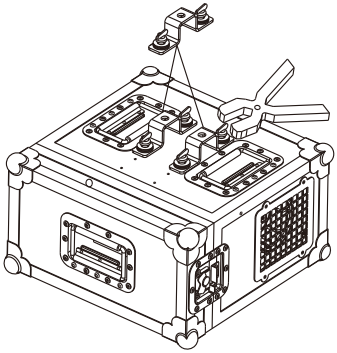

◆ **Fog machine fluid blowout and heater blocking phenomenon analysis**

Please use the original consumables, protect your health and life of machine

A.Fluid injection trouble: Refers to the fog fluid atomizing in the heater pipe of the machine is not good, heater temperature cannot be timely and effective transmit to the fog fluid, fog fluid cannot all atomization and lead to fluid injection

First reason: Using the low quality or counterfeit fog fluid, low quality fog fluid have more impurities, easy to adhere to the pipe wall and hindered temperature transmission result in incomplete atomization caused fluid injection.

Second reason: using an incorrect fog fluid. Different fog fluid have different required atomization temperature. If you use the wrong fog fluid result in fluid cannot fully atomization caused fluid injection.(fig 1)

B.Heater blocking trouble：poor atomization fluid injection is the early signs of heater block. Using poor quality fog fluid or not timely maintenance cleaning the fog machine for a long time. Inevitable will appear the terminal symptom of heater blocking.

Reason: heater blocked is because used inferior fog fluid or not maintenance for a long time. Have nothing to do with the quality of machine. Like a car with poor quality gasoline produce poor fluid circuit failure or long-time no maintenance the car will inevitably appear bigger problems. (fig 2)

C.Solutions to these problems: fog machine heating pipes used for a long time and then the pipe wall will easily produce sediments (The more inferior fog fluid the more impurities thus lead to fluid injection or blocked). All fog machines need regular maintenance (fog machine maintenance cycle for 1 to 2 months/time). Specific maintenance method: after heating the 35% white vinegar plus 65% distilled water and then spray 10 to 15 times

Conclusion: As long as the fog machine with fluid injection or heater blocking after using a period of time. It was caused by fog fluid quality or lack of maintenance, has nothing to do with the quality of the machine. Please use the original high quality fog fluid and timely maintain it, then it can be used for a long time.

**Pipeline has covered by dirt, insufficient heat transfer result in water-spraying.**

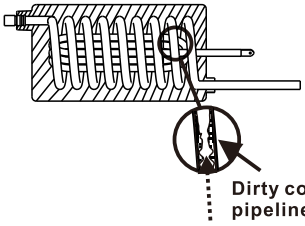


Fluid can not receive all heat.

**Fig 1**

**Pipeline has covered by dirt, that results in blocked heater.**

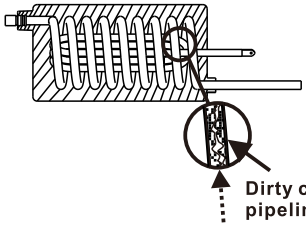


Fluid can not pass.

**Fig 2**