A↑G E

Control the game with the 24.5" GB2591HSU Gold Phoenix 320Hz Fast IPS monitor

The G-Master GB2591HSU-B1 is crafted to help you unleash your full gaming potential. With G-Sync Compatibility for smooth, tear-free gameplay and a 320Hz refresh rate, every movement feels fast and fluid. The 24.5” Fast IPS panel delivers clear, sharp visuals, while the 0.4ms response ensures you stay ahead in every game, without ever being held back *by* your gear. For added ergonomic comfort, the monitor includes a 150mm height-adjustable stand to fit your setup perfectly.

320Hz & 0.4ms MPRT

With 320Hz refresh rate and 0.4ms MPRT response time the force is with you! Make split second decisions and be sure the image on the screen is always sharp and smooth.

NVIDIA G-SYNC Compatible

Unlock tear-free, ultra-smooth gameplay with NVIDIA G-SYNC, syncing your monitor to your GPU for fluid motion, reduced stutter, and crystal-clear action. (DisplayPort Only)

01 DISPLAY CHARACTERISTICS

Diagonal	24.5", 68.6cm
Panel	Fast IPS
Native resolution	1920 x 1080 @320Hz (2.1 megapixel full HD, DisplayPort)
Aspect ratio	16:9
Panel brightness	350 cd/m²
Static contrast	1000:1
Advanced contrast	100M:1
Response time (MPRT)	0.4ms
Viewing zone	horizontal/vertical: horizontal°/vertical 178°, right/left: 0°/0°, up/down: 0°/0°
Colour support	16.7mln 8bit
Horizontal Sync	30 - 360kHz
Viewable area W x H	543.7 x 302.6mm, 21.4 x 11.9"
Pixel pitch	0.2802mm
Colour	matte, black

02 INTERFACES / CONNECTORS / CONTROLS

Signal input	HDMI x2 (v.2.1, max. 1920 x 1080 @240Hz) DisplayPort x1 (v.1.4, max. 1920 x 1080 @320Hz)
USB HUB	x4 (2x Type A v.3.2 Gen 1 (5Gbps, 4.5W), 2x Type C (5Gbps, 7.5W))
HDCP	yes
Headphone connector	yes

03 FEATURES

Blue light reducer	yes
Flicker free	yes
Adaptive Sync support	G-SYNC - 1920 x 1080 @48-320Hz, DisplayPort Only
HDR	Yes, HDR10 Ready
OSD languages	EN, DE, FR, IT, PT, RU, JP, CZ, NL, PL
Control buttons	power switch, joystick, menu (center), up / signal select, down / shortcut, left / volume -, right / volume +
User controls	picture adjust (contrast, brightness, overdrive, HDR, Adaptive Sync, night mode, blue light reducer, Motion Blur Reducer, gamma), input select (input source), audio adjust (volume, mute), store user setting (user modes), color settings (6-axis, color temperature, user preset, black tuner), image adjust (i-Style color, X-Res Technology, sharpness, HDMI range, direct drive mode, video mode adjust), language, setup menu (OSD horizontal position, OSD vertical position, OSD time, opening logo, power LED, DDC/CI control, usb charge), display information, reset (reset all)
Speakers	2 x 4W
Convenience	Kensington-lock™ prepared, DDC/CI

04 MECHANICAL

Display position adjustments	height, pivot (rotation), tilt
Height adjustment	150mm
Rotation (PIVOT function)	90°
Swivel stand	90°; ° left; 45° right
Tilt angle	23° up; 5° down

VESA mounting	100 x 100mm
Cable management system	yes

05 ACCESSORIES INCLUDED

Cables	power (1.8m), USB (1.8m), DP (1.8m)
Other	quick start guide, safety guide

06 POWER MANAGEMENT

Power supply unit	internal
Power supply	AC AC - 100V, 240/V, 50Hz
Power usage	30W typical, 0.5W stand by, 0.3W off mode

07 SUSTAINABILITY

Regulations	CB, CE, TÜV-Bauart, EAC, VCCI-B, PSE, RoHS support, ErP, WEEE, REACH
Energy efficiency class (Regulation (EU) 2017/1369)	E

08 DIMENSIONS / WEIGHT

Product dimensions W x H x D	557 x 324 x 55,5mm
Box dimensions W x H x D	630 x 504 x 142mm
Weight (without box)	5,3kg
Weight (with box)	8,03kg
EAN code	4948570125562

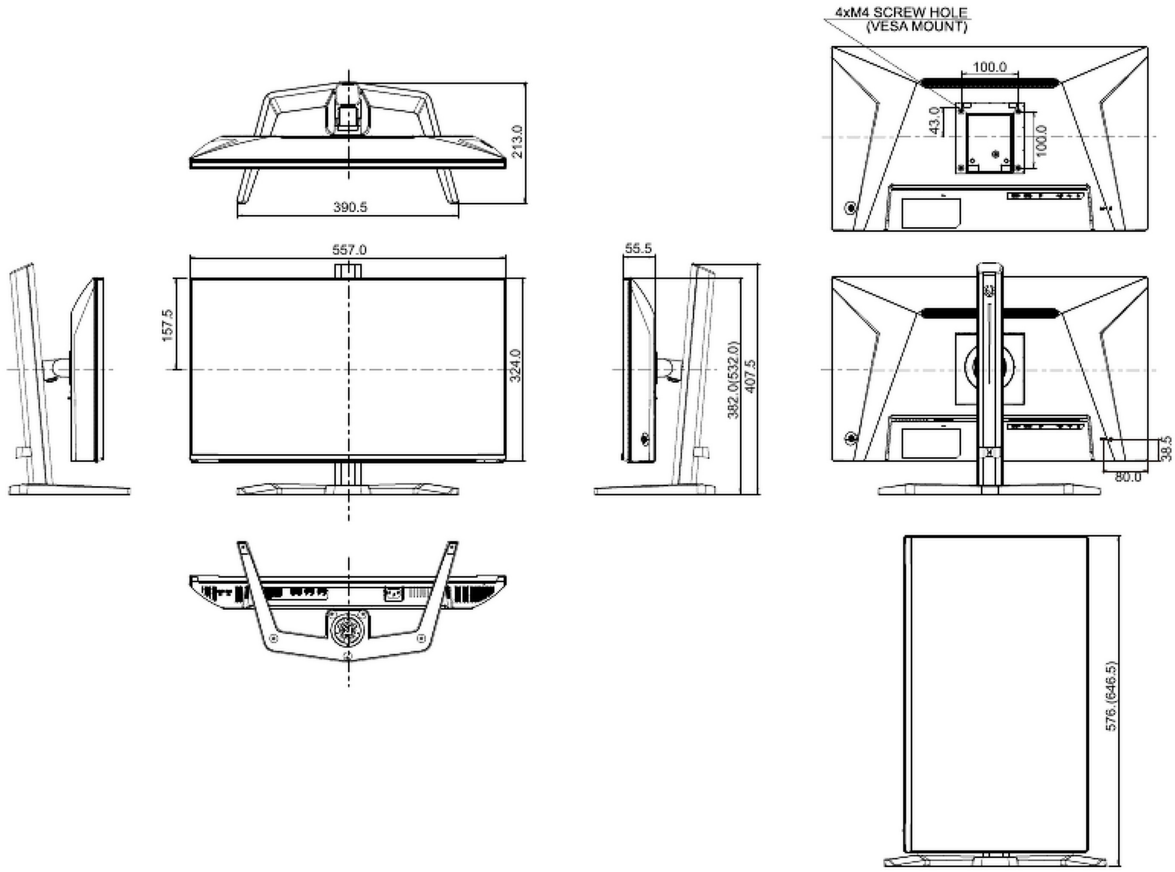

All trademarks and registered trademarks acknowledged. E & O E. Specification subject to change without notice. All LCD's comply with ISO-9241-307:2008 in connection with pixel defects.

© IIYAMA CORPORATION. ALL RIGHTS RESERVED