USER MANUAL

G500 SERIES

User Manual : G500 series
Version : Rev 1.7
Issue Date : 2020.03.19
P/N : 920-014011-00

TABLE OF CONTENTS

1 Barcode Printer 001
1-1 Box Content 001
1-2 Getting To Know Your Printer 002

2 Printer Setup 004
2-1 Open The Printer Cover 004
2-2 Open The Printing Mechanism 004
2-3 Loading The Ribbon 005
2-4 Loading The Label Roll 007
2-5 Installing The Label Supply Hub 009
2-6 Preparing For Tag Printing 010
2-7 Connecting The Printer To The Host Computer 011
2-8 Installing The Driver 012

3 Operation Panel 015
3-1 LED Operation Panel 015
3-2 Label size calibration and Self Test Page 016
3-3 Error Alerts 017

4 NetSetting for Ethernet 018
4-1 Installing The NetSetting Software 019
4-2 The Interface Of NetSetting 020

5 Accessories 026
5-1 Installing The Label Dispenser 027
5-2 Installing The Cutter 032

6 Maintenance And Adjustment 036
6-1 Cleaning The Print Head 036
6-2 Adjusting The Print Head Pressure 036
6-3 Adjusting The Print Line 037
6-4 Adjusting The Cutter 037
6-5 Troubleshooting 038

Appendix

P/N : 920-014011-00

FCC COMPLIANCE STATEMENT FOR AMERICAN USERS

This equipment has been tested and found to comply with the limits for a CLASS A digital device, pursuant to Part 15 Subpart B of the FCC Rules. These limits are designed to provide reasonable protection against harmful interference when the equipment is operated in a commercial environment. This equipment generates, uses, and can radiate radio frequency energy and, if not installed and used in accordance with the instructions, may cause harmful interference to radio communications. Operation of this equipment in a residential area is likely to cause harmful interference in which case the user will be required to correct the interference at own expense.

EMS AND EMI COMPLIANCE STATEMENT FOR EUROPEAN USERS

This equipment has been tested and passed with the requirements relating to electromagnetic compatibility based on the standards EN 55032:2006/A1:2013 Class A, EN61000-3-2:2006, EN55032:2012/AC:2013 Class A, EN61000-3-2:2014 , IEC 61000-4-2:2008 series, The equipment also tested and passed in accordance with the European Standard EN55022 for the both Radiated and Conducted emissions limits.

G500 SERIES TO WHICH THIS DECLARATION RELATES IS IN CONFORMITY WITH THE FOLLOWING STANDARDS

IEC 60950-1:2005(2nd Edition)+Am 1:2009 Am 2:2013, GB9254-2008 (Class A) ; GB17625. 1-2012; GB4943.1-2011, EN55032:2012/AC:2013 Class A, EN61000-3-2:2014, EN 61000-3-3:2013 and EN55024:2010, IEC 61000-4-2:2008 series, UL 60950-1, 1st Edition, 2007-10-31, CSA C22.2 No. 60950-1-03, 1st Edition, 2006-07, CFR 47, Part 15 Subpart B

WARNING

This is a Class A product. In a domestic environment this product may cause radio interference in which case the user may be required to take adequate measures.

此为Class A产品，在生活环境中，该产品可能造成无线电干扰，在这种情况下，可能需要用户对其干扰采取切实可行的措施。

P/N : 920-014011-00

SAFETY INSTRUCTIONS

Please read the following instructions carefully.

- Keep the equipment away from humidity.
- Before you connect the equipment to the power outlet, please check the voltage of the power source.
- Make sure the printer is off before plugging the power connector into the power jack.
- It is recommended that you connect the printer to a surge protector to prevent possible transient overvoltage damage.
- Be careful not to get liquid on the equipment to avoid electrical shock.
- For safety and warranty reasons, ONLY qualified service personnel should open the equipment.
- Do not repair or adjust energized equipment under any circumstances.

CAUTION

- Danger of explosion if battery is incorrectly replaced. Replace only with the equivalent type recommended by the manufacturer.
- Dispose of used batteries according to the manufacturer’s instructions.
- Only use with designated power supply adapter model.
- Changes or modifications not expressly approved by the party responsible for compliance could void the user's authority to operate the equipment.

P/N : 920-014011-00

1 Barcode Printer

1-1 Box Content

Please check that all of the following items are included with your printer.

- Barcode Printer

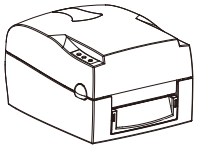

- Ribbon Hubs (set of 2)

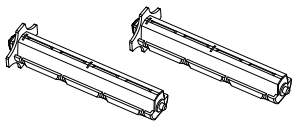

- Power Cord

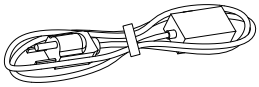

- Empty Ribbon Core

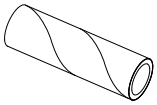

- AC Adapter

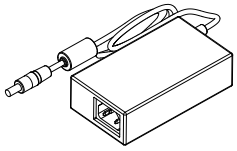

- Label Supply Hub

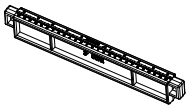

- USB Cable

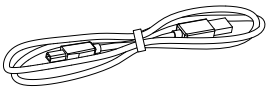

- Label Guide Plates (set of 2)

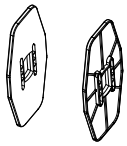

- Ribbon

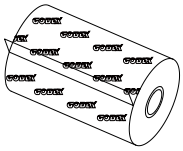

- Quick Reference Guide

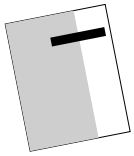

- Label Stock

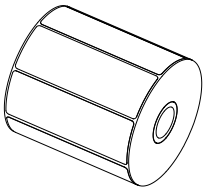

- CD (with QLabel software / user manual)

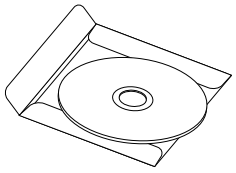

1-2 Getting To Know Your Printer

Device Overview

- Front View

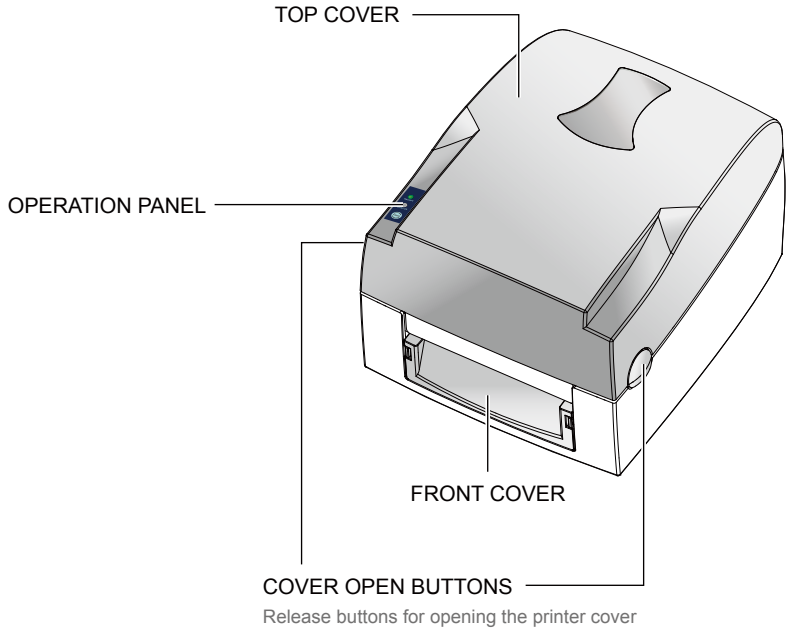

- Rear View

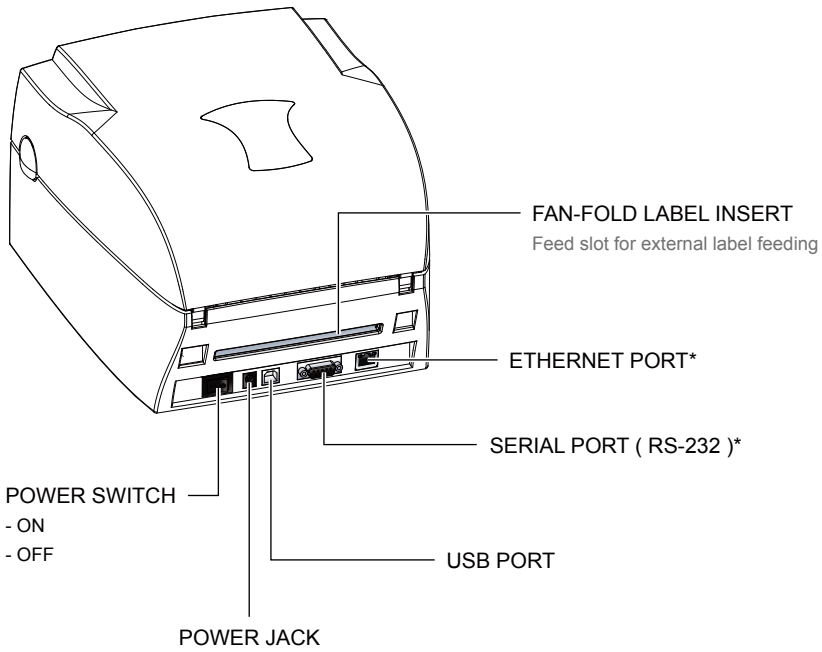

NOTICE

- The combination of connection ports may vary with printer model.

Open The Printer Cover

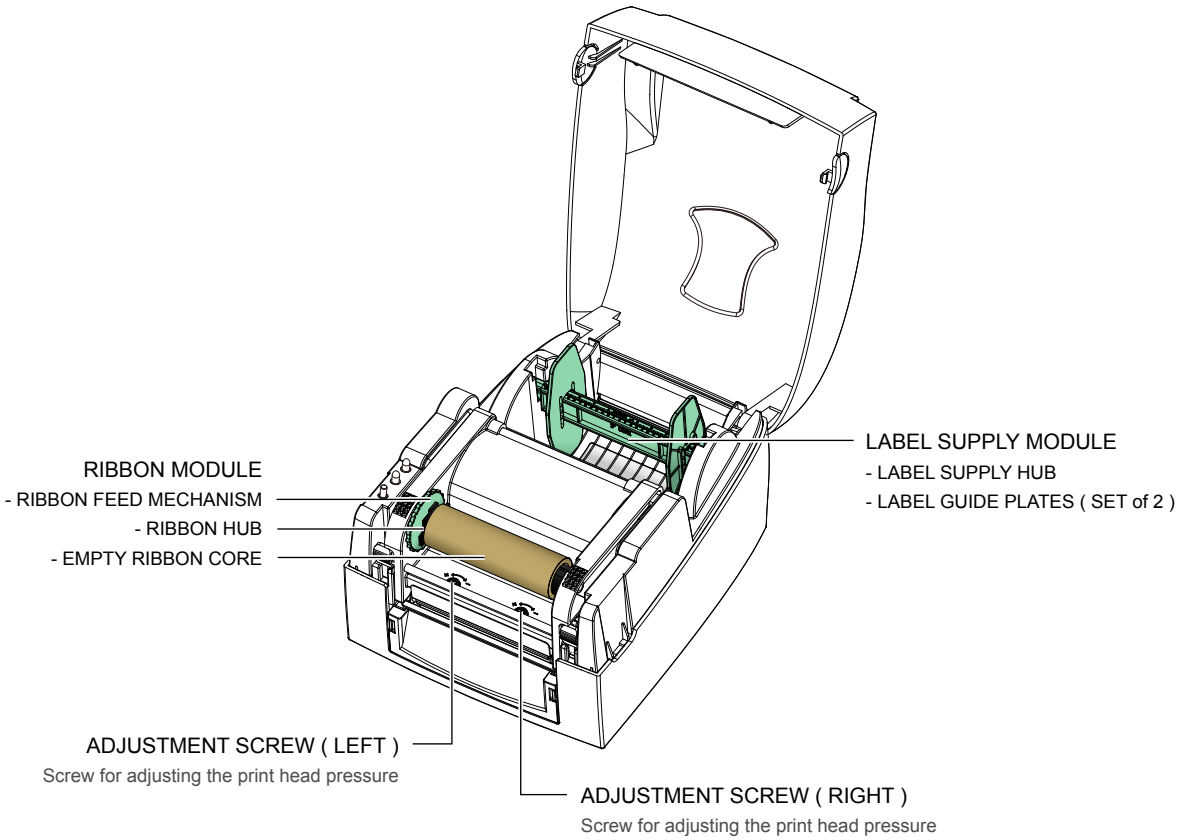

Open The Printing Mechanism

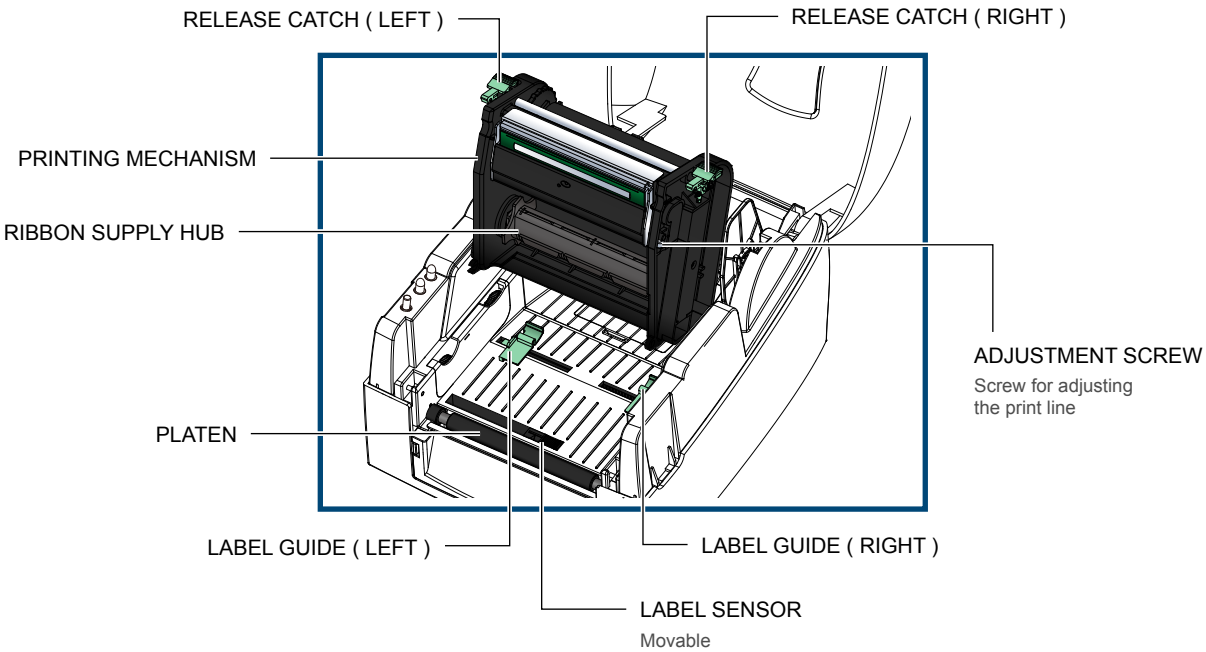

2-1 Open The Printer Cover

Pressing The Cover Open Buttons

Place the printer on a flat surface. Open the printer cover by pressing the release buttons on both sides of the printer housing and lift the cover.

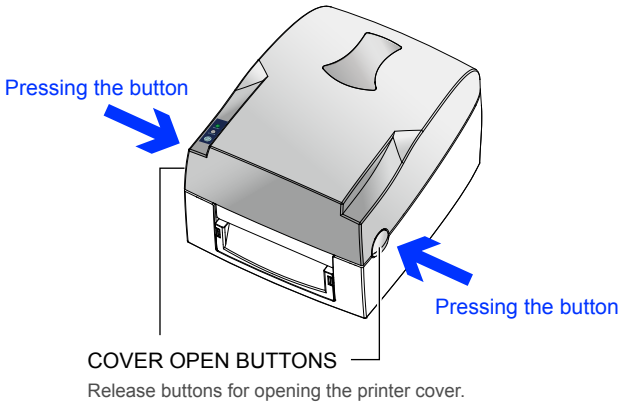

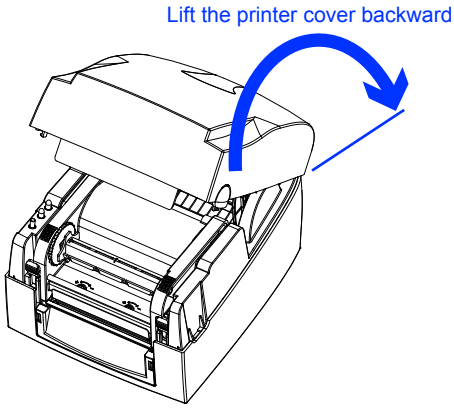

2-2 Open The Printing Mechanism

Pressing The Release Catches

Release and lift the printing mechanism.

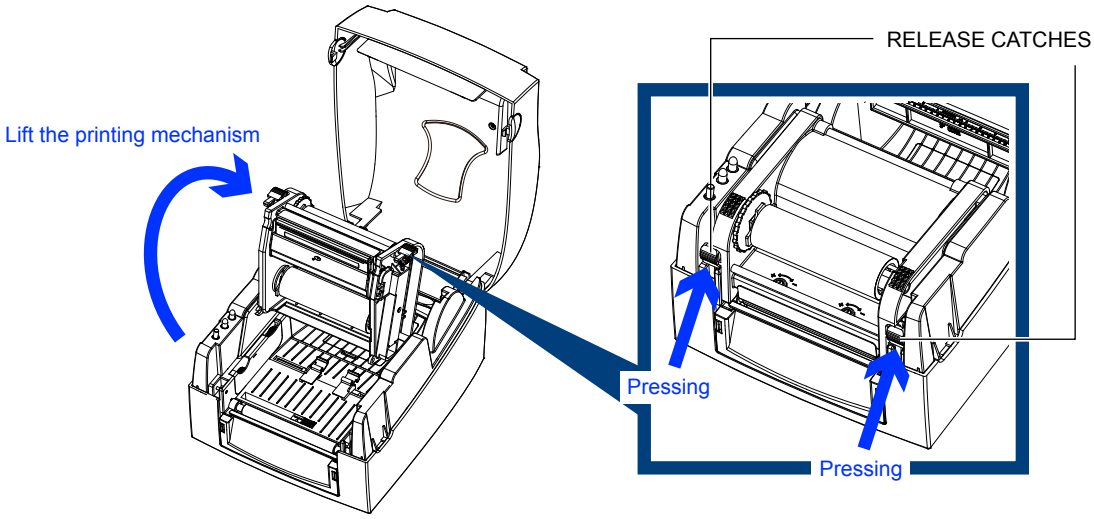

2-3 Loading The Ribbon

A New Ribbon Module Installation

Place the new ribbon on the hub which forms a ribbon supply hub.

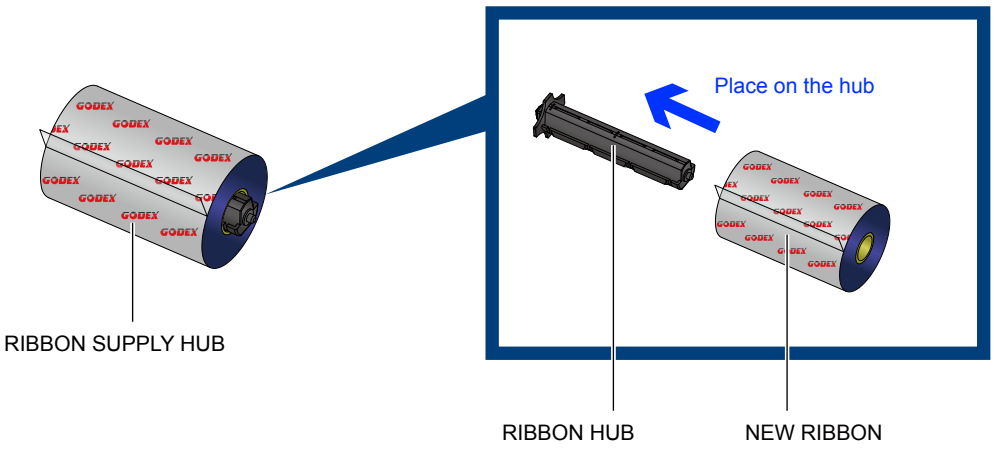

Place the empty ribbon core on the hub which forms a ribbon rewind hub.

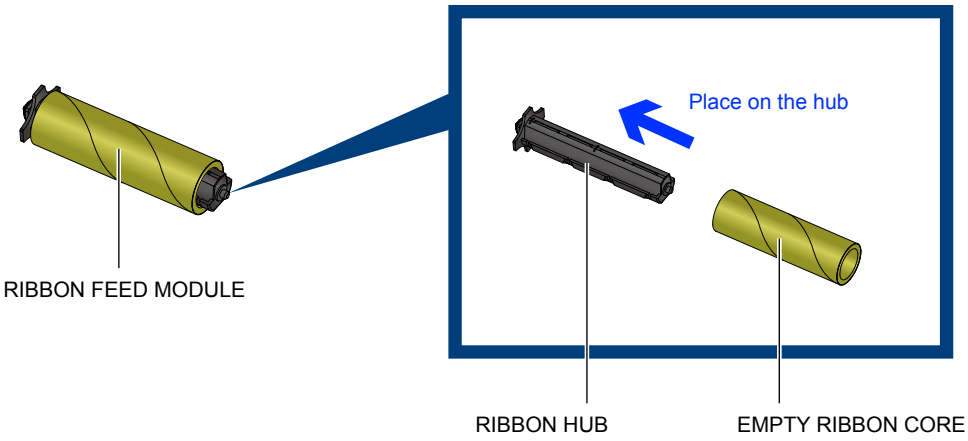

Stick the ribbon supply hub on the ribbon rewind hub and wind the rewind hub 2~3 circles.

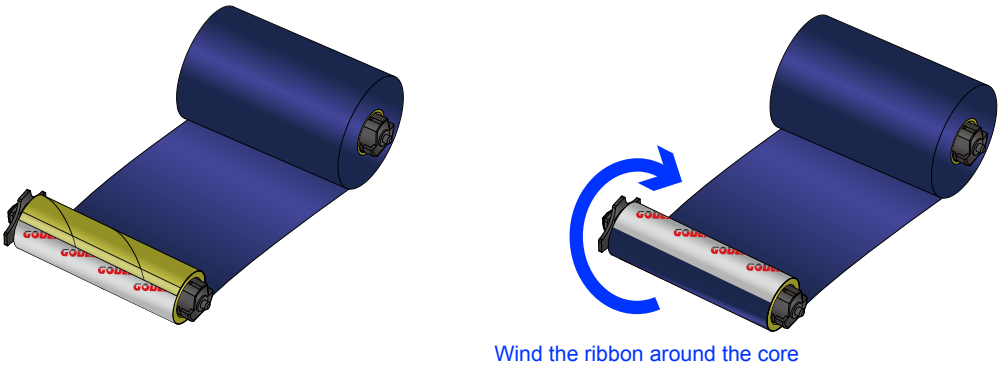

Install The Ribbon On The Printer

Place the ribbon supply hub at the back of the printing mechanism.

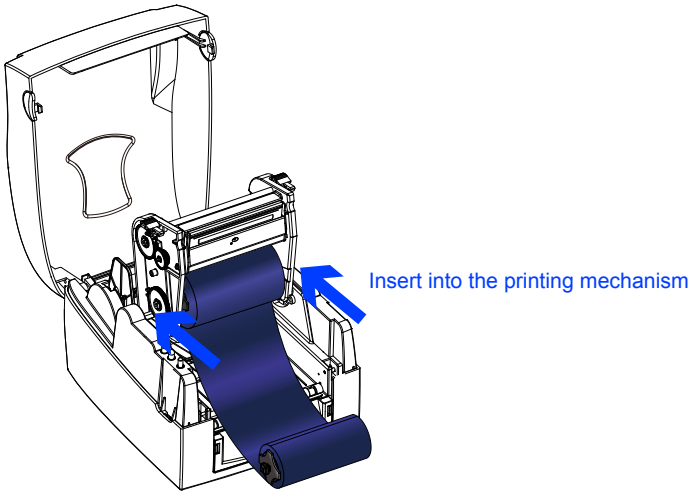

Pass the ribbon supply hub under the print head.
Insert the ribbon rewind hub on the ribbon feed mechanism.
Close the printing mechanism, making sure that it clicks into place.

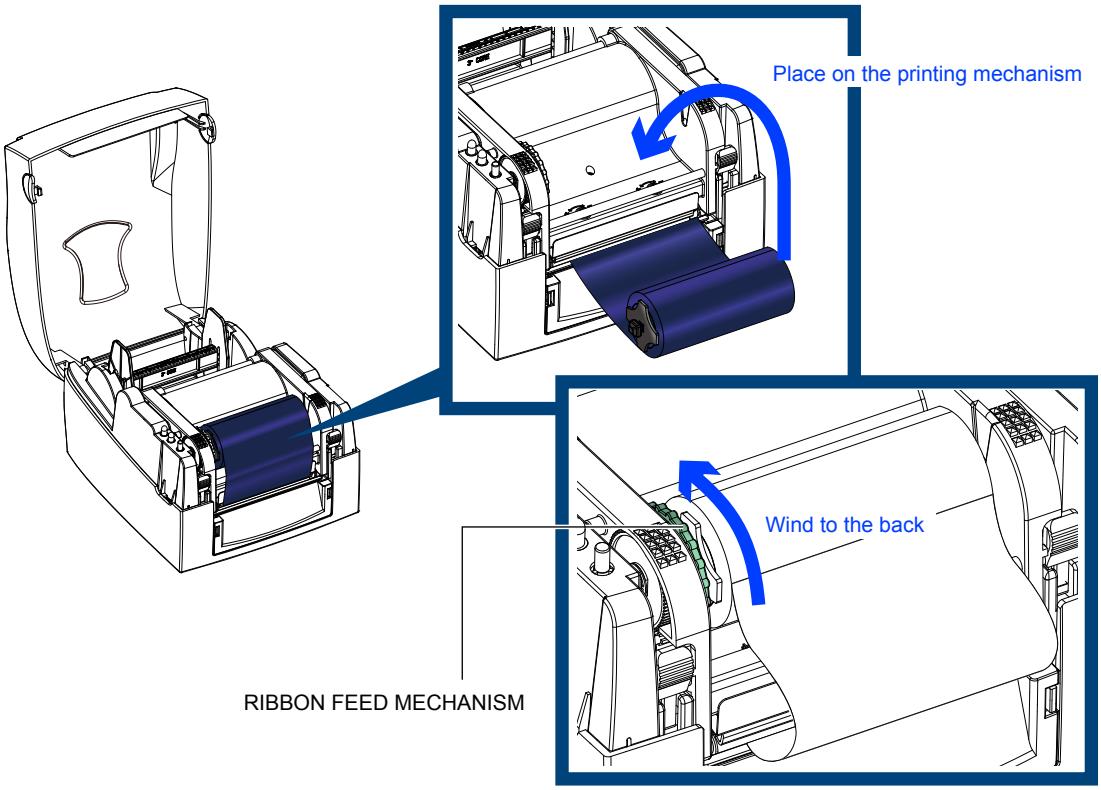

2-4 Loading The Label Roll

A New Label Roll Module Installation

Place the label stock on the label supply hub, attach the guide plates to the label stock holder.

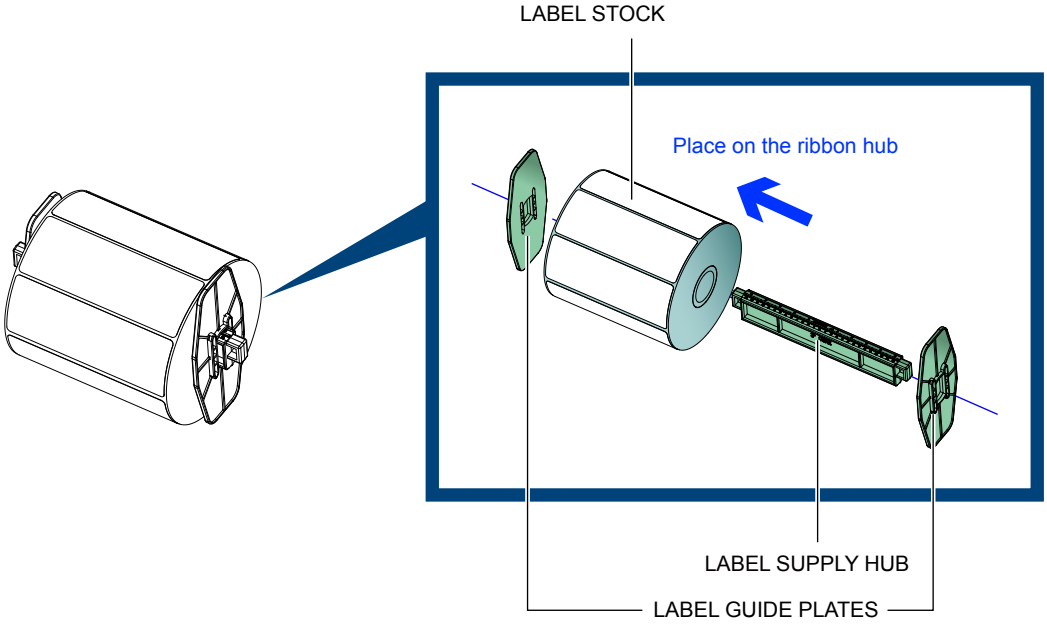

Install The Label Roll Module On The Printer

Now load the label stock into the printer.

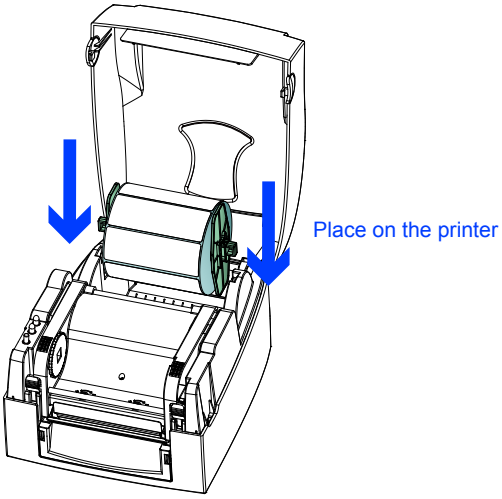

Release the printing mechanism and lift it.
Pass the labels through the label guides up to the tear-off plate.
Adjust the label guides to the label width.

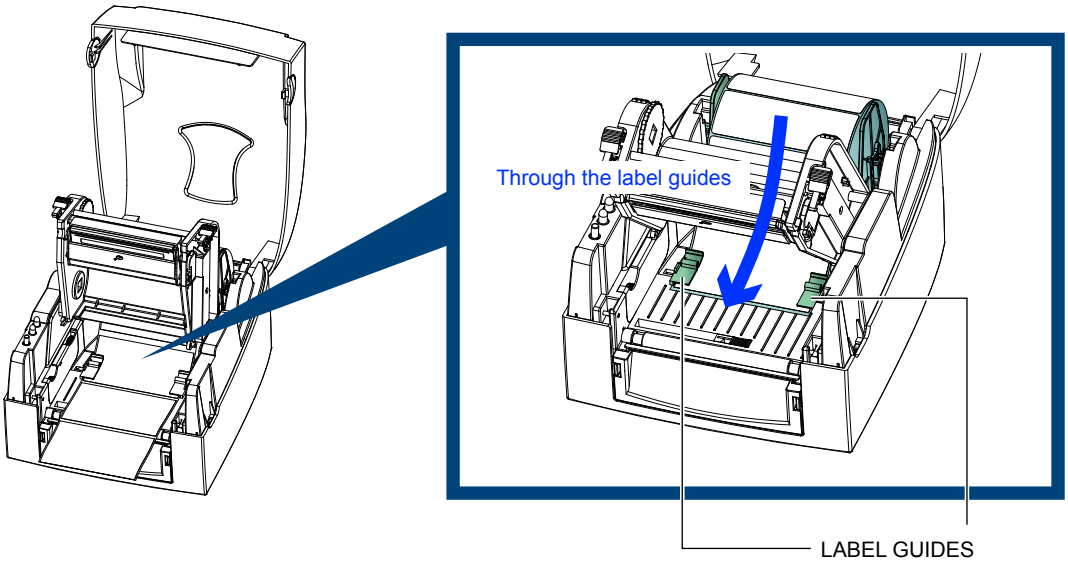

Close the printing mechanism.

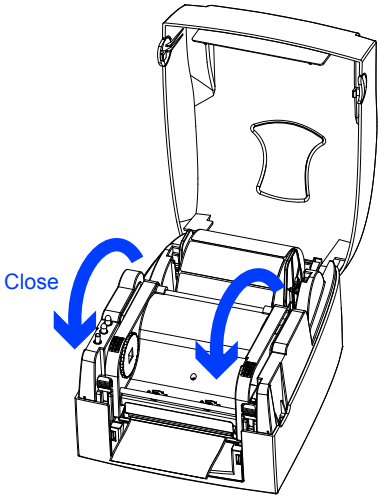

2-5 Installing The Label Supply Hub

1" Cores

Installing the label supply hub for 1" cores.

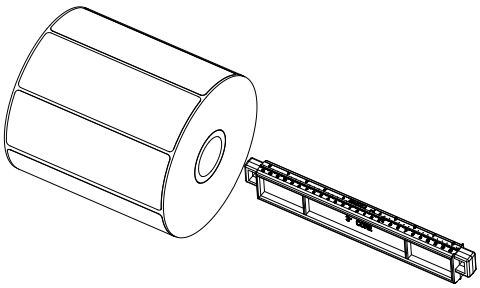

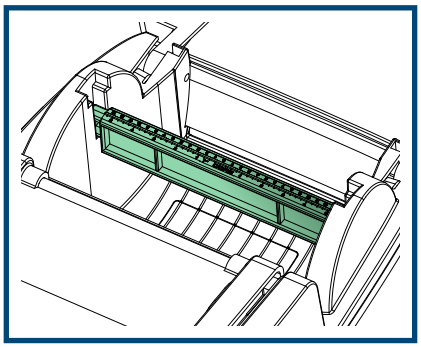

1.5" Cores

Installing the label supply hub for 1.5" cores.

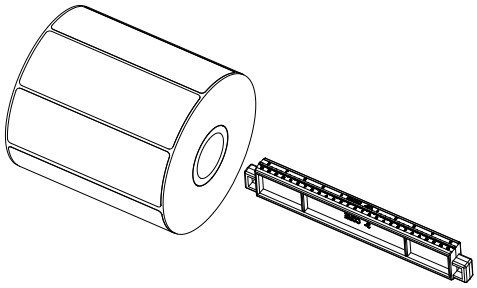

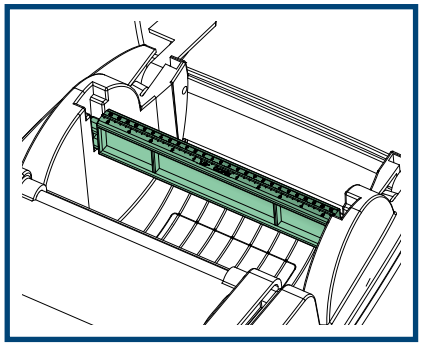

3" Cores

Installing the label supply hub for 3" cores.

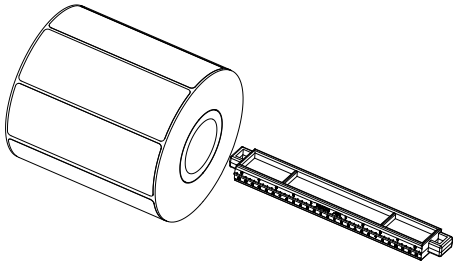

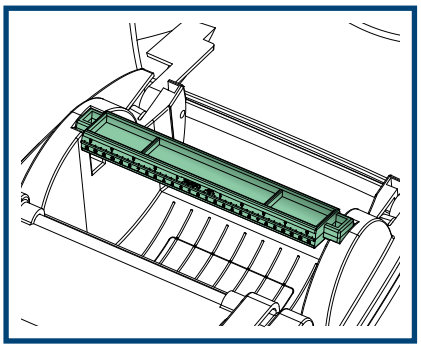

2-6 Preparing For Tag Printing

In tag printing, the tag hole indicates the height of a label. During adjustment, the sensor must therefore be positioned directly below the tag hole as shown in the illustration. The tag hole should be at least 3 mm in diameter to ensure correct functioning.

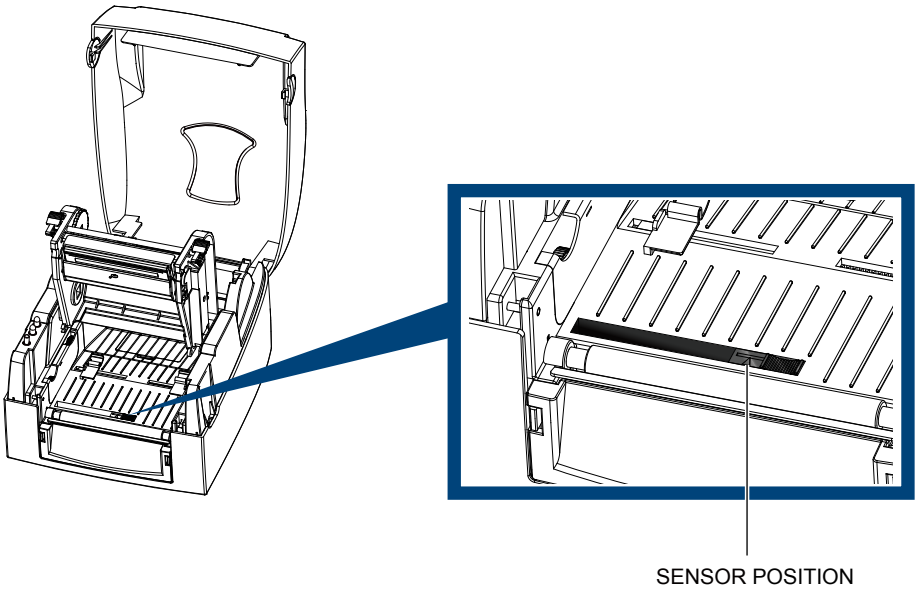

2-7 Connecting The Printer To The Host Computer

- Please make sure that the printer is switched off.
- Connect the power cord to the AC adapter and connect the adapter to the printer.
- Connect the USB / parallel cable to the printer and host computer.
- Switch on the printer. The LED indicator should now lights up.

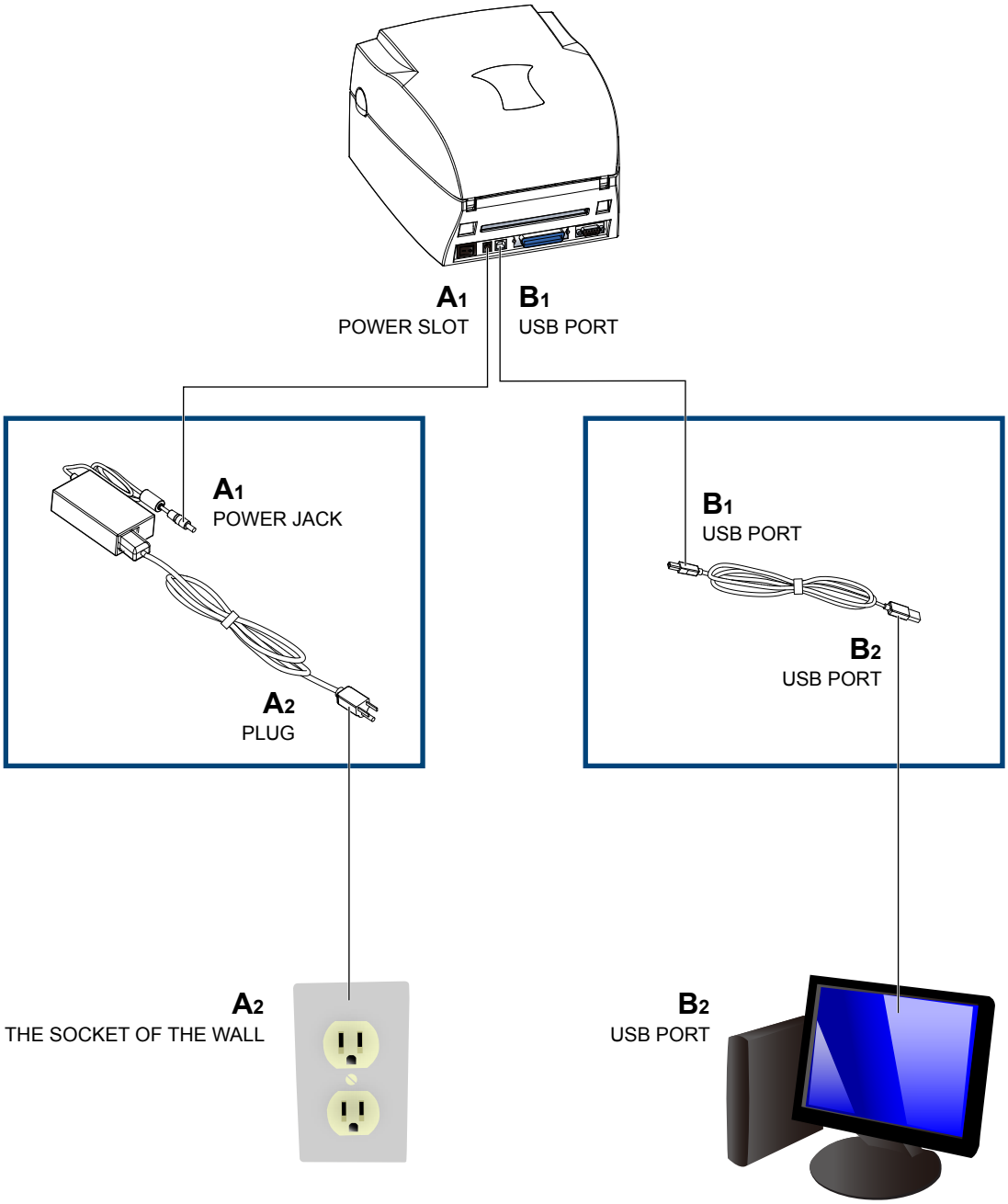

2-8 Installing The Driver

STEP-01 ▸ Insert the product CD in the CD/DVD drive of the host computer and open the "Seagull-Driver" folder on the CD.

STEP-02 ▸ Select the icon for the driver file and click it to start the installation.

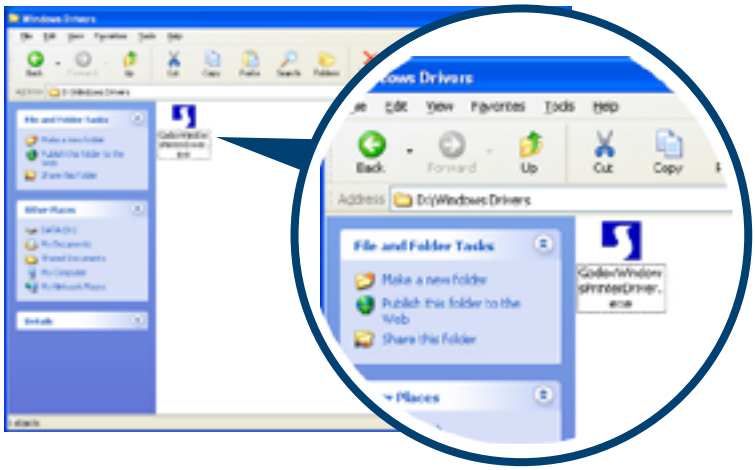

STEP-03 ▸ Follow the instructions on the screen. The Driver Wizard guides you through the installation procedure.

STEP-04 ▸ Select "Install printer drivers".

STEP-05 ▸ Specify your printer model.

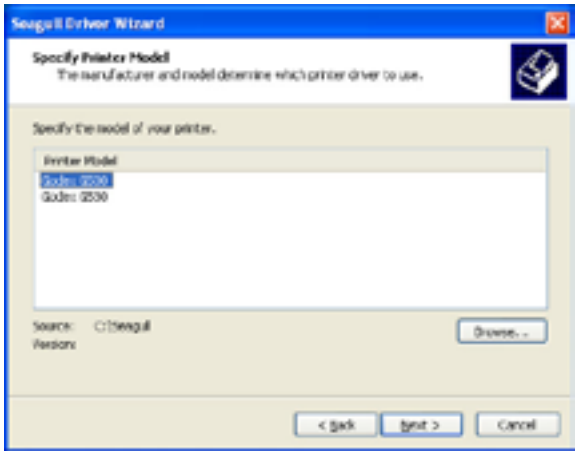

STEP-06 ▸ Specify the port used to connect the printer to the host computer.

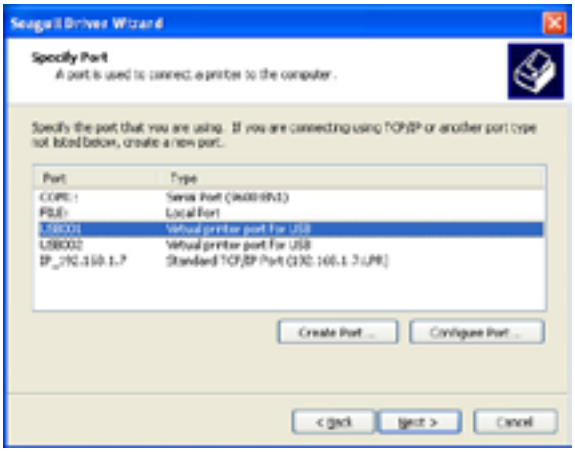

STEP-07 ▸ Enter a printer name and assign the appropriate rights.

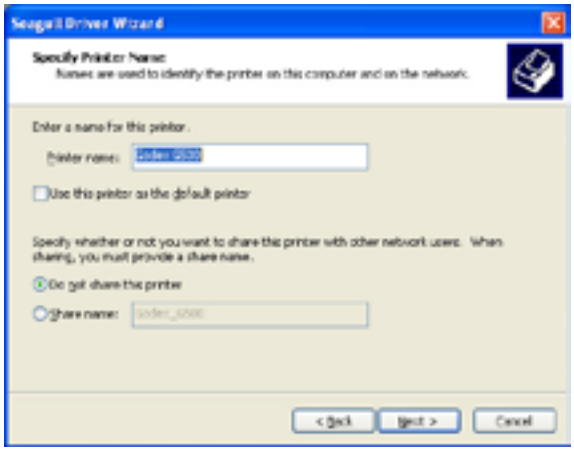

STEP-08 ▸ Once the installation is complete, a summary of the printer settings is displayed.
STEP-09 ▸ Check whether the printer settings are correct and click "Finish" to start copying the driver files.
STEP-10 ▸ Wait until copying is complete, then finish the installation.

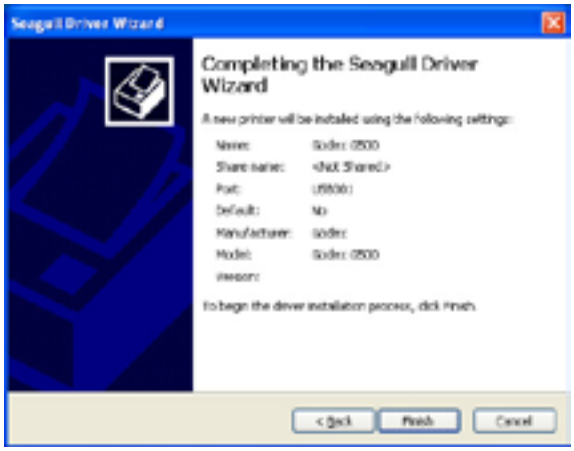

STEP-11 ▸ Once the driver installation is complete, the new printer should appear in the "Printers and Faxes" folder.

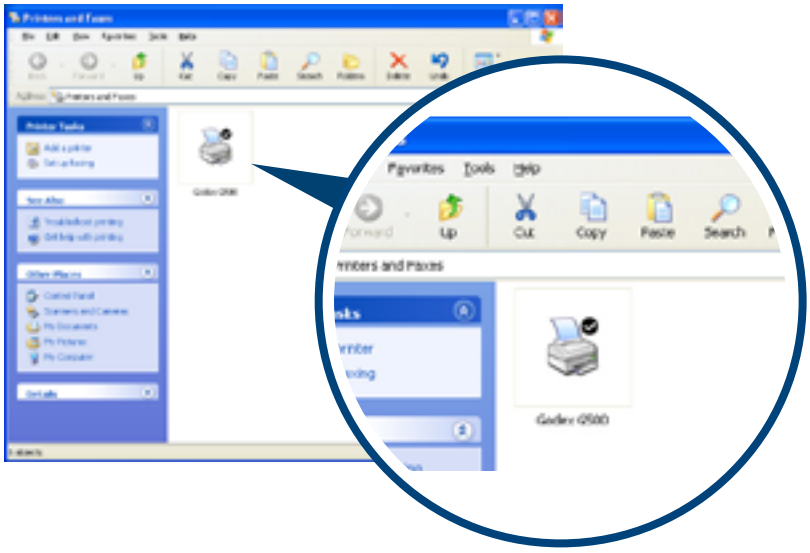

3-1 LED Operation Panel

FEED Button

When you press the FEED button, the printer moves the label to the defined stop position. If you are using continuous labels, pressing the FEED button will move label stock until you release the button again. If you are using individual labels, pressing the FEED button will move only one label. If the label does not stop at the correct position, please run the auto calibration (See Section 3-2. for the label size calibration function) on the label stock.

LED Indicators

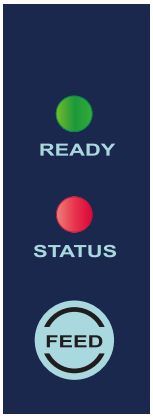

LED indicator		Beeps	Status	Description
READY	Green	X	**Standby mode**	The printer is ready for operation.
STATUS	X			
READY	X	2 x 2 beeps 2 x 3 beeps 2 x 4 beeps	**Error mode**	The printer has detected an error. (See Section 3-3. for Error alerts)
STATUS	Red			

3-2 Label size calibration and Self Test Page

The printer can automatically detect and store label height.
That means the host computer does not need to transmit the label height to the printer.
And the self-test function lets you check whether the printer is functioning normally.
Here is how you run the label size calibration and self test.

STEP-01 ▸ Check that the label stock is loaded correctly.
STEP-02 ▸ Switch off the printer.
STEP-03 ▸ Switch the printer on again, keeping the FEED button pressed. When the READY LED starts to flash red and the STATUS LED lights up orange, release the FEED button. The printer will now measure the label stock and store the label height.
STEP-04 ▸ Once the printer has successfully measured the label stock, it will print a self-test label.

The contents of a self-test printout are listed below.

Model & Version	G500 GX.XXX
USB ID setting	USB S/N: XXXXXXXX
Serial port setting	Serial port : 96,N,8,1
MAC address of Ethernet port	MAC Addr: xx-xx-xx-xx-xx-xx
IP protocol setting	DHCP Enable
IP address of Ethernet port	IP xxx.xxx.xxx.xxx
Gateway setting	Gateway xxx.xxx.xxx.xxx
Netmask setting	Sub-Mask xxx.xxx.xxx.xxx
	##################################
Number of DRAM installed	1 DRAM installed
Image buffer size	Image buffer size : 1500 KB
Number of forms	000 FORM(S) IN MEMORY
Number of graphics	000 GRAPHIC(S) IN MEMORY
Number of fonts	000 FONT(S) IN MEMORY
Number of Asian fonts	000 ASIAN FONT(S) IN MEMORY
Number of Databases	000 DATABASE(S) IN MEMORY
Number of Scalable fonts	000 TTF(S) IN MEMORY
Free memory size	2048 KB FREE MEMORY
Speed, Density, Ref. Point, Print direction	^S4 ^H10 ^R000 ~R200
Label width, Form length, Stop position	^W108 ^Q100,0,0 ^E12
Cutter, Label Dispenser, Mode	Option : ^D0 ^O0 ^AD
Sensor Setting	Reflective AD : 1.80 2.01 1.89 [0.21_0]
Code Page	Code Page : 850
Printer is on factory default	Default state= No

3-3 Error Alerts

In the event of a problem that prevents normal functioning of the printer, you will see an error message on LED indicators and hear some beep signals. Please refer to below table for the error alerts.

- Light on
- Flashing

LED indicator		Beeps	Description	Solution
READY	STATUS			
		2 x 4 beeps	The printing mechanism is not correctly closed.	Open the print mechanism and close it again.
		None	High temperature at the print head.	Once the print head has cooled down, the printer switches to standby mode.
		2 x 3 beeps	No ribbon is installed and the printer displays an error.	Make sure that the printer is set to direct thermal printing mode.
			The ribbon is finished or the label supply hub is not moving.	Replace the ribbon roll.
		2 x 2 beeps	No paper is detected.	Make sure that the label sensor is positioned correctly. If the sensor still does not detect the paper, run the auto-detection function again.
			Paper is finished.	Replace the label roll.
			Printer feed problem.	Possible reasons: the print medium has become trapped around the rubber roll; the sensor cannot detect a gap or black mark between the labels; there is no paper. Please reset the sensor.
		2 x 2 beeps	The memory is full. The printer prints the message "File System full".	Delete unnecessary data or install additional memory.
			Unable to find file. The printer prints the message "File Name Not found".	Use the "~X4" command to print all files. Then check whether the files exist and whether the names are correct.
			A file of the same name already exists. The printer prints the message "Duplicate Name".	Change the name of the file and try storing it again.

4-1 Installing The NetSetting software

The NetSetting software is used to manage the network configurations when connecting the printer via Ethernet port. It is available on product CD or can be downloaded from official website. To install the NetSetting, please follow below steps.

STEP-01 ▸ Insert the product CD in the CD/DVD drive of the host computer and open the "Ethernet" folder on the CD.
STEP-02 ▸ Select the icon for the NetSetting installation file and click it to start the installation.

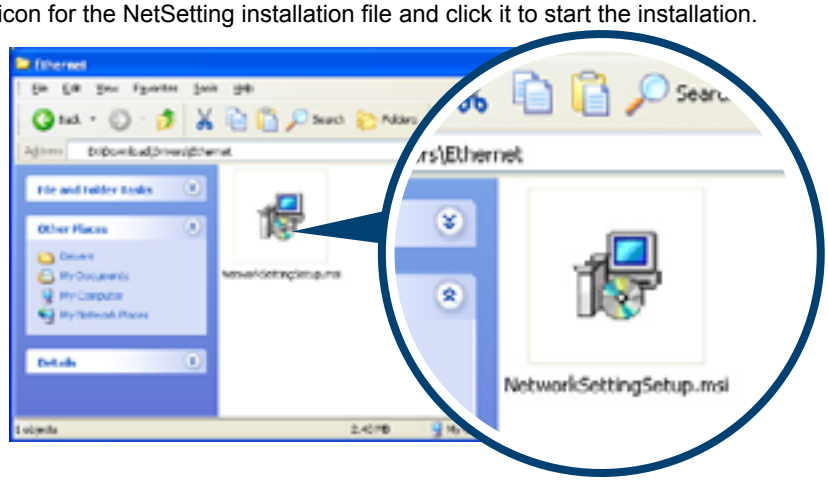

STEP-03 ▸ Follow the instructions on the screen. The Setup Wizard guides you through the installation procedure.
STEP-04 ▸ Specify the “Installation Folder".

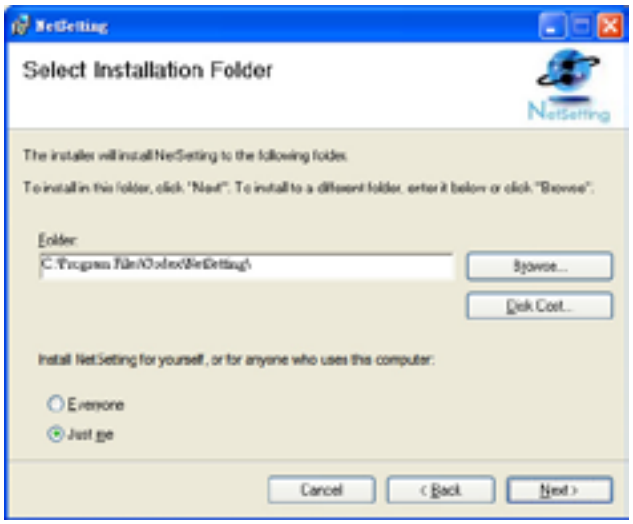

STEP-05 ▸ Click ”Next” to start the installation.
STEP-06 ▸ Once the installation is completed; you will see the NetSetting icon on your desktop.

4-2 The interface of NetSetting

Click the NetSetting icon to start the program; you will see the start page as below. The start page will display the basic information of connected printer and your PC.

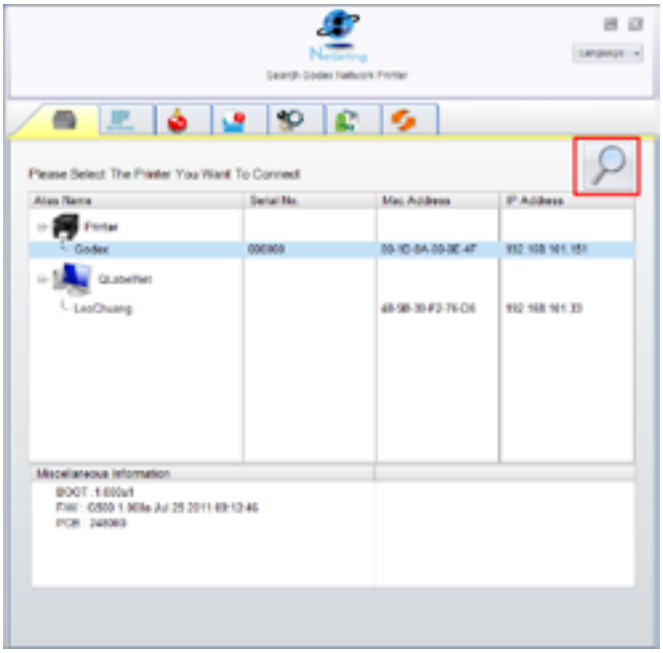

Click the magnifier icon to search the Godex printers which are connected via Ethernet port in you network environment. Once a connected Godex printer is detected, it will be listed on the start page.

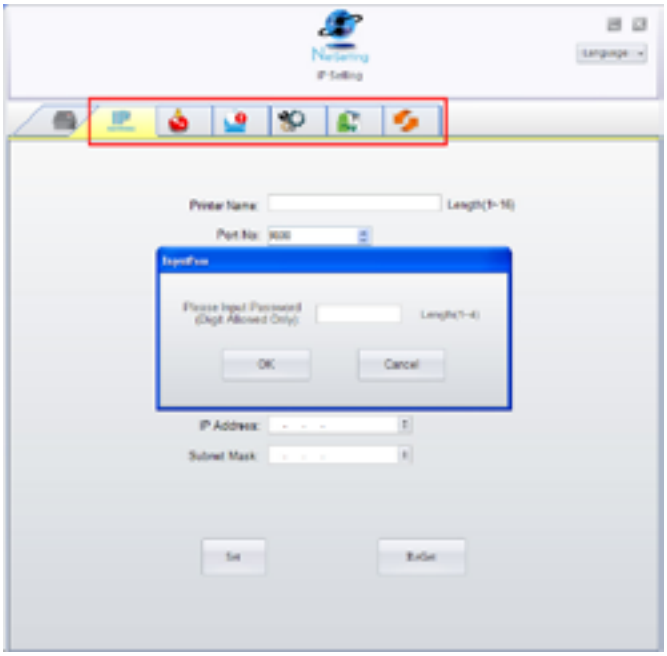

There are six tabs on the top of interface which can configure different types of network settings. But for the data security reason, you need correct password to enter the configuration pages.

NOTICE

- The default password is “1111”, you can change the password later from the “IP Setting” tab.

IP Setting

The IP Setting tab can change the printer name, Port number, Gateway setting and the password for configuring the printer. You can also set the printer's IP address ether by DHCP or by Static IP.

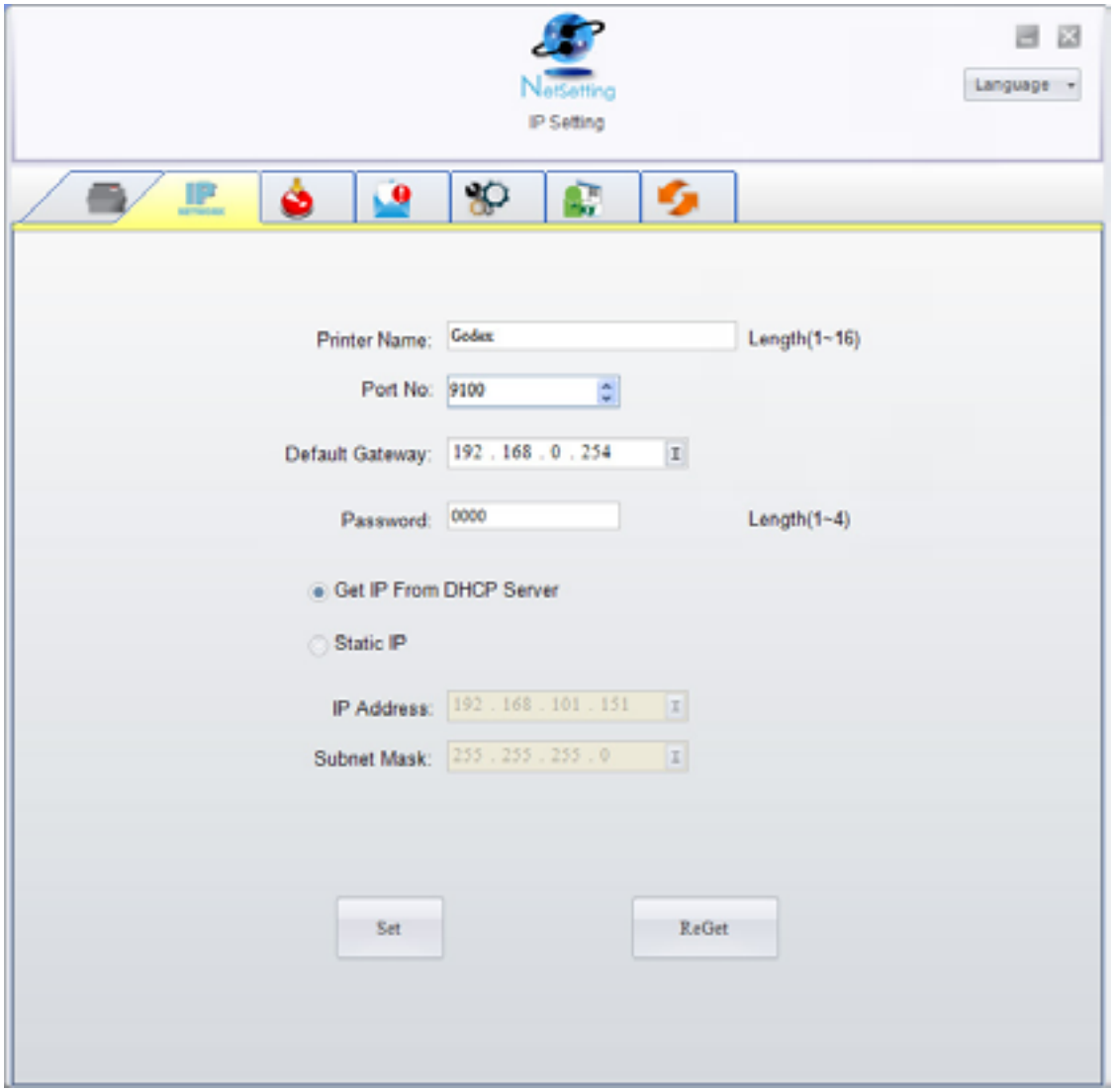

You can press "Set" button to apply the settings and "ReGet" button to refresh the setting values.

NOTICE

- To fully benefit from the NetSetting software, you should be familiar with basic networking principles. Please contact your network administrator for related network setting information.

Alert Path Setting

NetSetting will send the alert messages to designated mail account when the error happened on printer. The alert messages are sent by SMTP (Simple Mail Transfer Protocol) or SNMP (Simple Network Management Protocol). You can set or change the configurations of SMTP and SNMP on this “Alert Path Setting” tab.

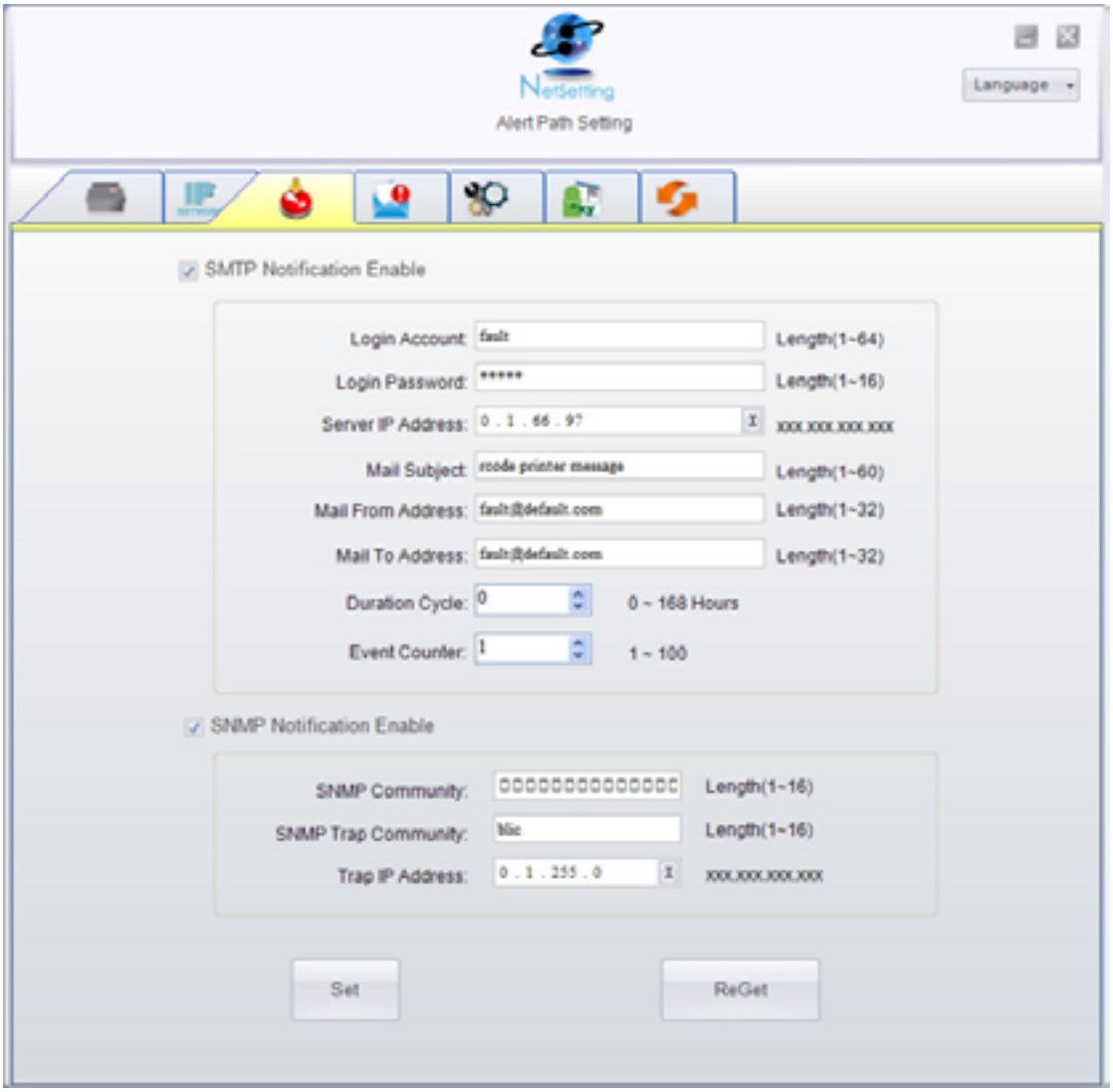

You can press “Set” button to apply the settings and “ReGet” button to refresh the setting values.

Alert Message Setting

For the alert message notification function, you can decide which error cases need to be sent out to the operator. Moreover, the alert messages can be set to be sent by SMTP, SNMP or both.

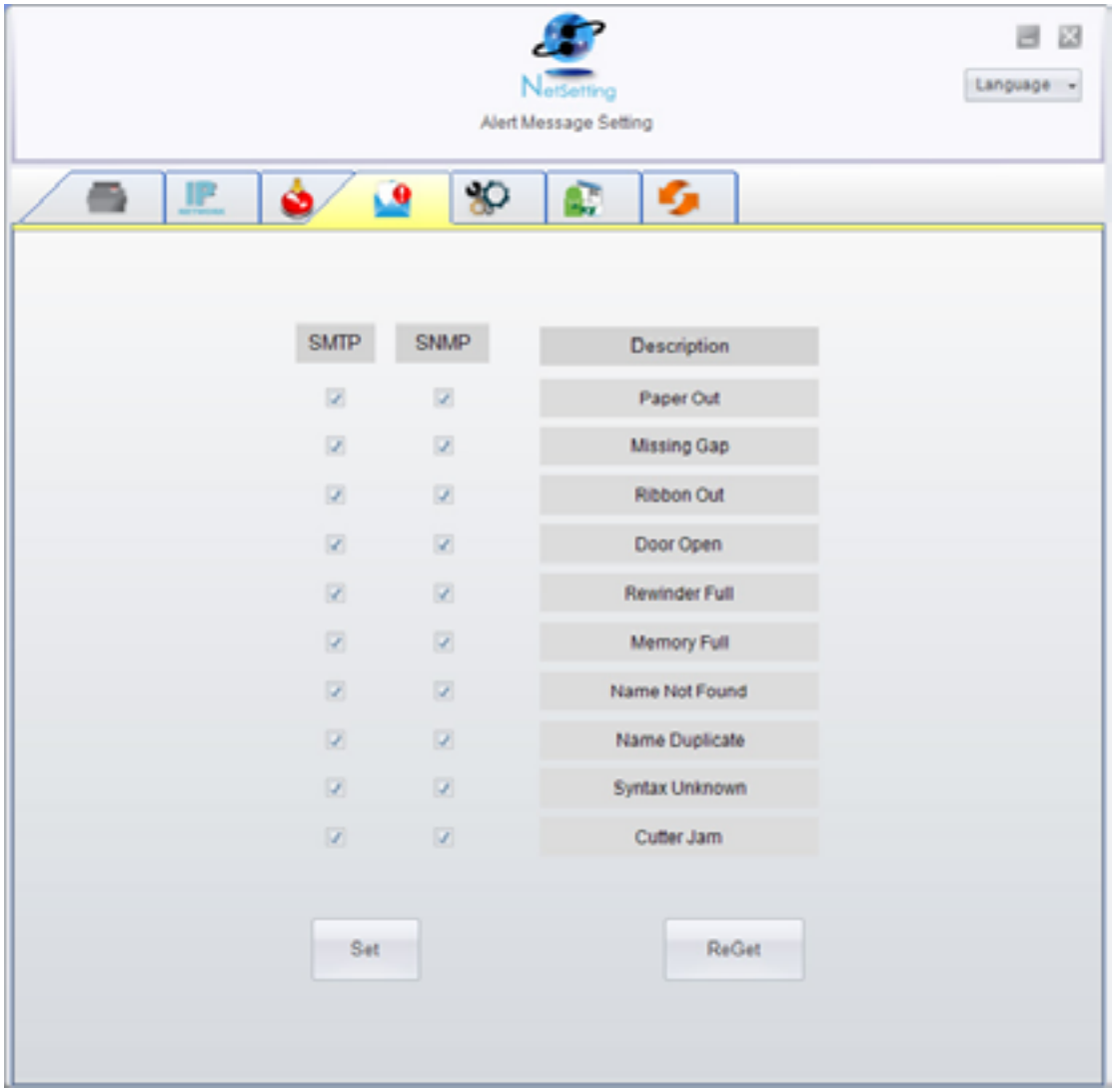

You can press “Set” button to apply the settings and “ReGet” button to refresh the setting values.

Printer Configuration

Set or change the configurations of connected printer. Most of key settings for the printer operation can be done by this setting page.

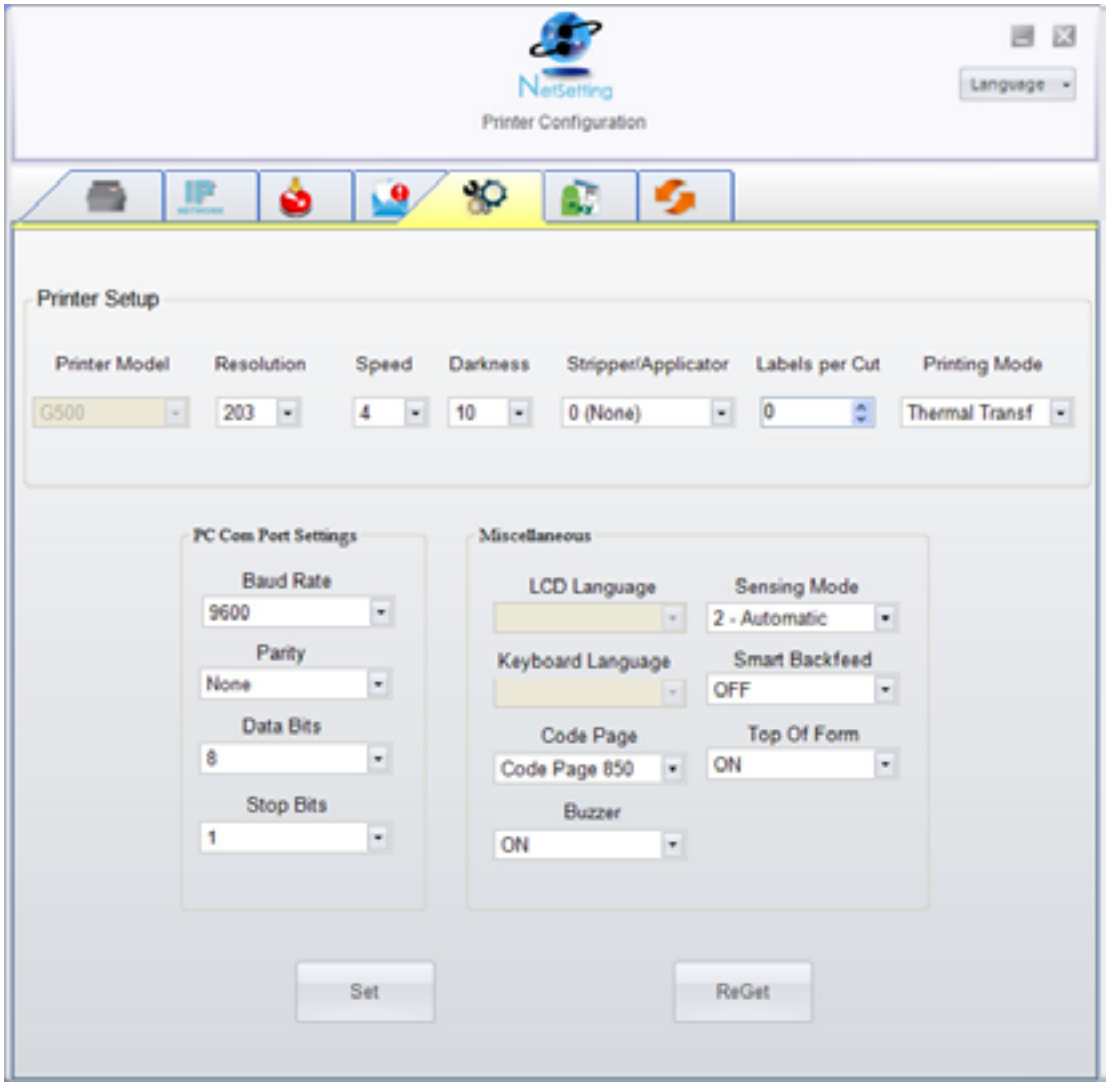

You can press “Set” button to apply the settings and “ReGet” button to refresh the setting values.

User Command

The “User Command” tab provides a communication interface for operator to control the printer. Input printer commands in "Input Command" window and press “Send Command” button, the commands will be sent to the printer. For some commands that will return response message, the message will be displayed in "Output Message" window.

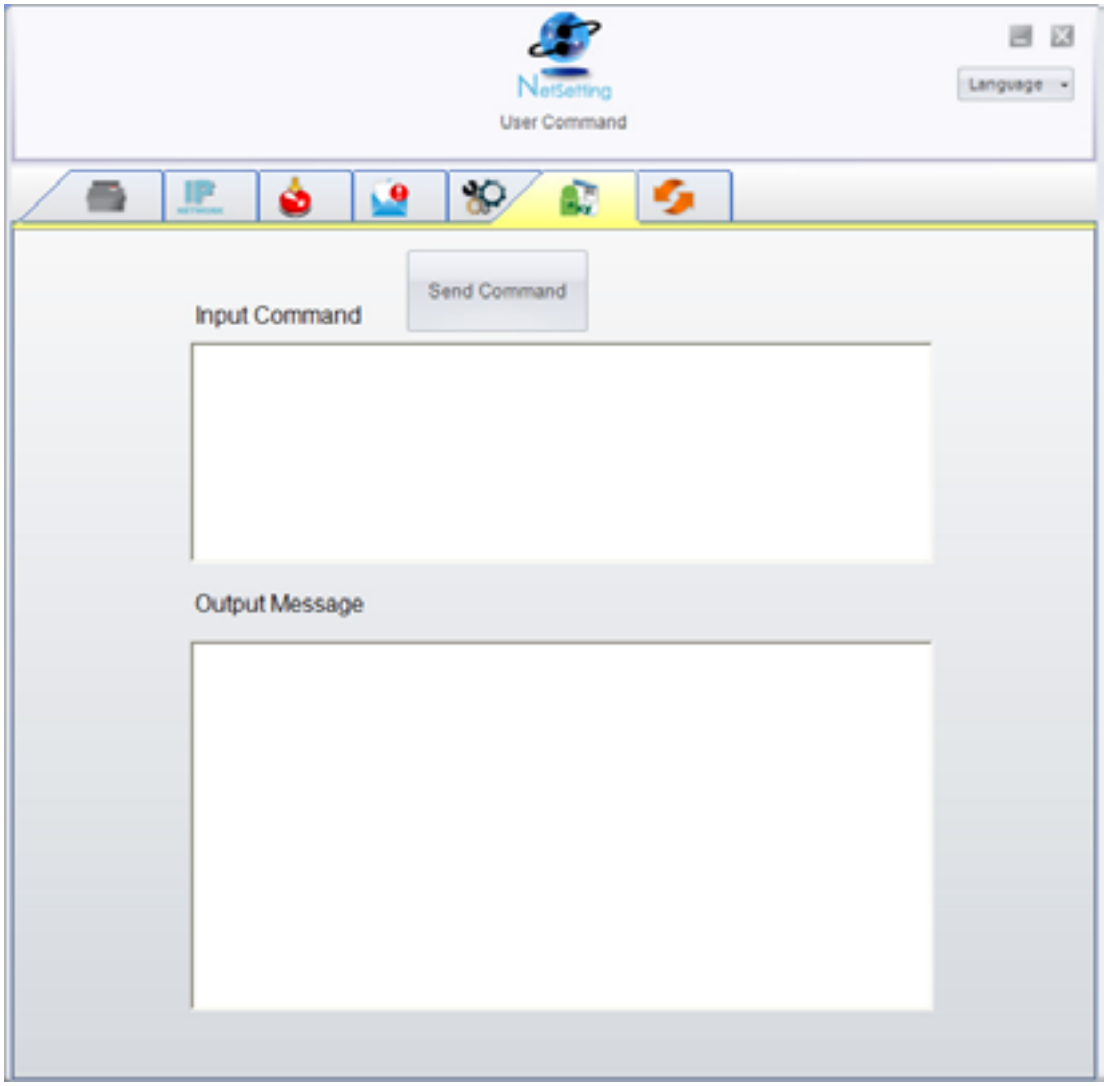

You can press “Send Command” button to send printer commands via Ethernet port and control the printer remotely.

Firmware Download

On “Firmware Download” tab, the current version of printer firmware will be showed on the screen. If you need to update the printer firmware, just specify the file location of firmware file and press “Start Download Firmware” button. The printer firmware then can be updated remotely.

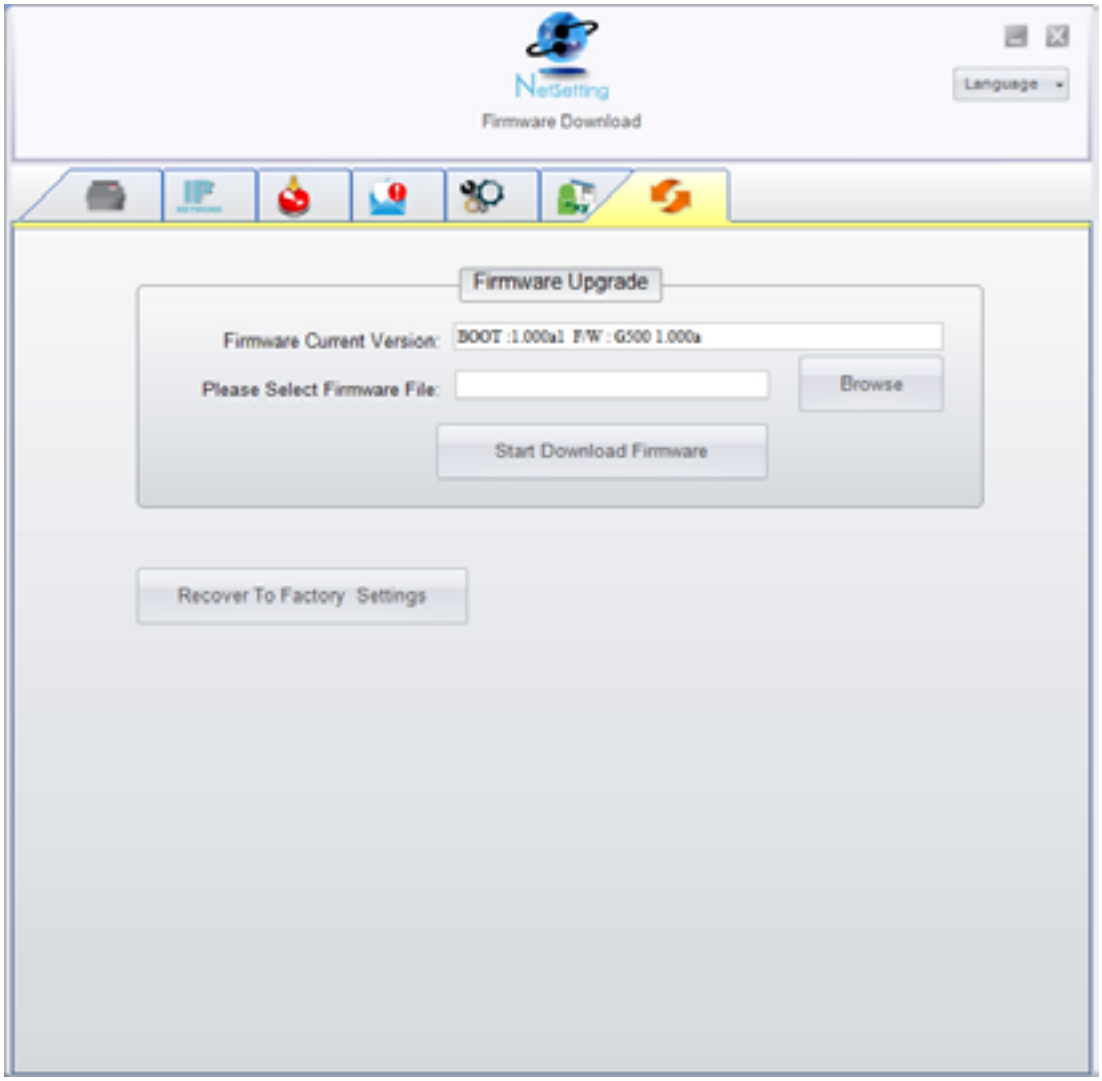

In addition to the firmware update, you can press “Recover To Factory Settings” button to restore the printer configurations back to factory default.

Preparation Steps

Before installing the optional modules, please make some preparations as follows.

STEP-01 Turn Off The Printer :

Remember to switch off the printer before installing any module.

STEP-02 Open The Printer Cover :

Open the printer cover by pressing the release buttons on both sides of the printer housing.

Please see the Section 2-1 for further information about Open The Printer Cover.

STEP-03 Open The Printing Mechanism :

Press the release catches on both sides of the printing mechanism to open and lift the printing mechanism.

Please see the Section 2-2 for further information about Open The Printing Mechanism.

STEP-04 Remove The Front Cover :

To remove the front cover, press in the two plastic release tabs.

Remove the front cover as shown in the illustration.

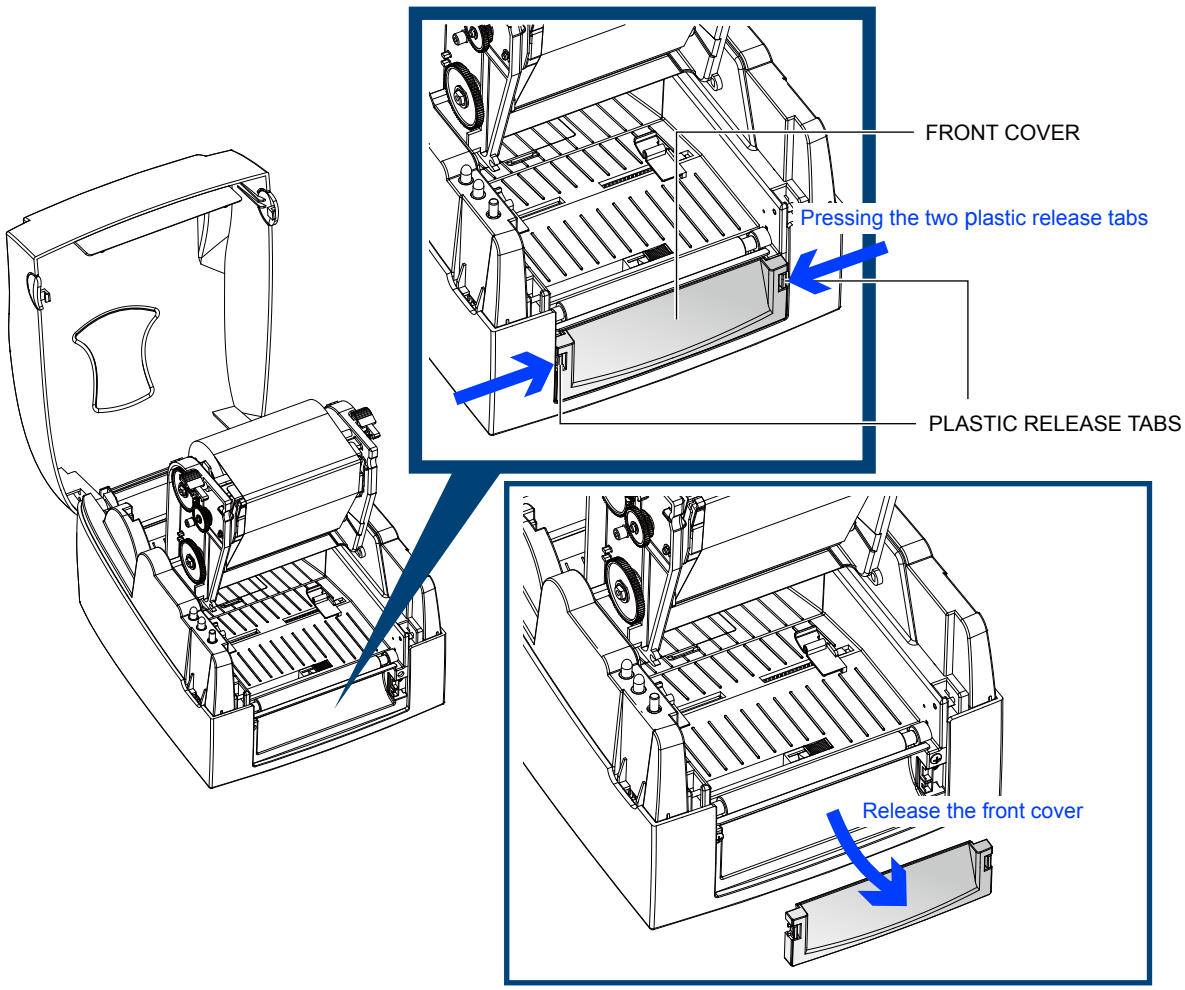

5-1 Installing The Label Dispenser

The Overview Of The Label Dispenser

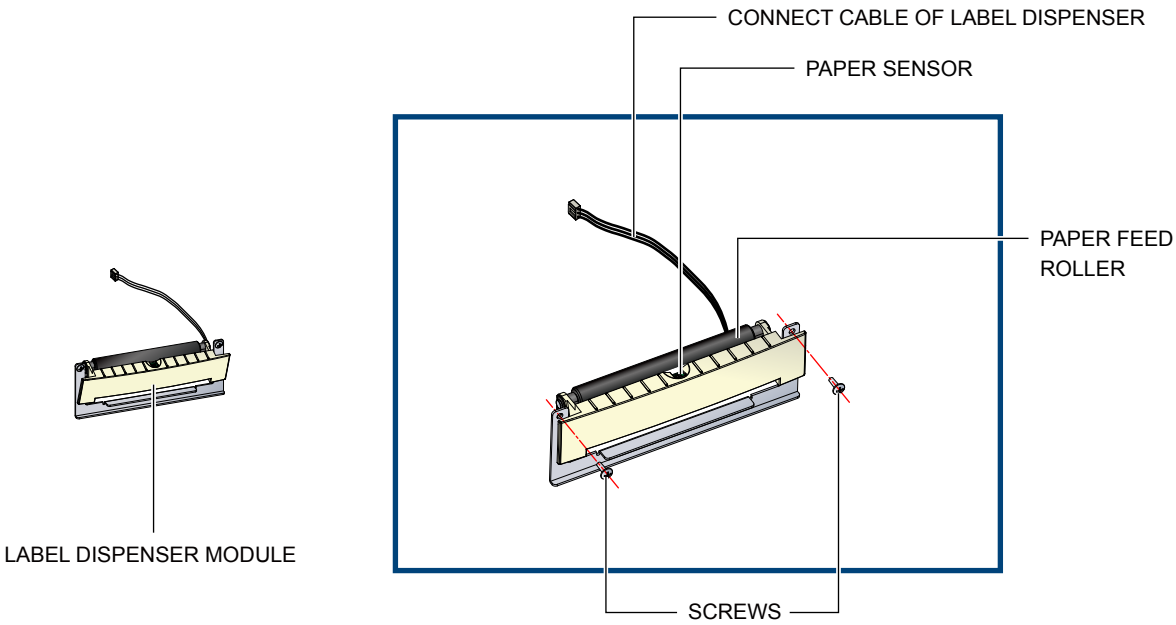

NOTICE

- A label liner thickness of 0.006 mm ± 10% and a weight of 65 g/m^2 ± 6% are recommended.
- The label dispenser will take labels up to a max. width of 110 mm.
- When using the label dispenser, set the stop position to 9 mm.

Preparation Steps

Please complete the preparation steps before installing the label dispenser.

Installing The Label Dispenser

Connect the dispenser cable to the lower jack as shown in the illustration on the right.

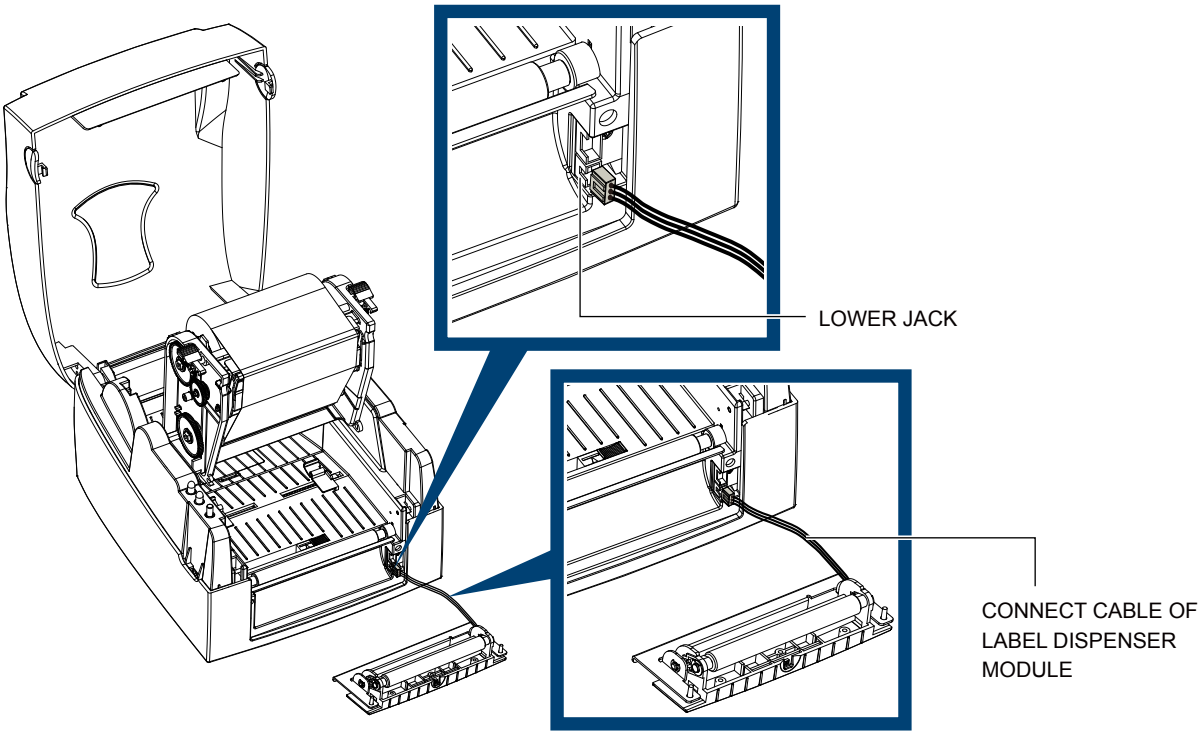

NOTICE

- The printer must be switched off, or the motherboard may be damaged!
- There are 2 jacks : the lower jack is for the dispenser, the upper jack for the cutter.

Install the dispenser by pressing down first its right-hand side and then its left-hand side.

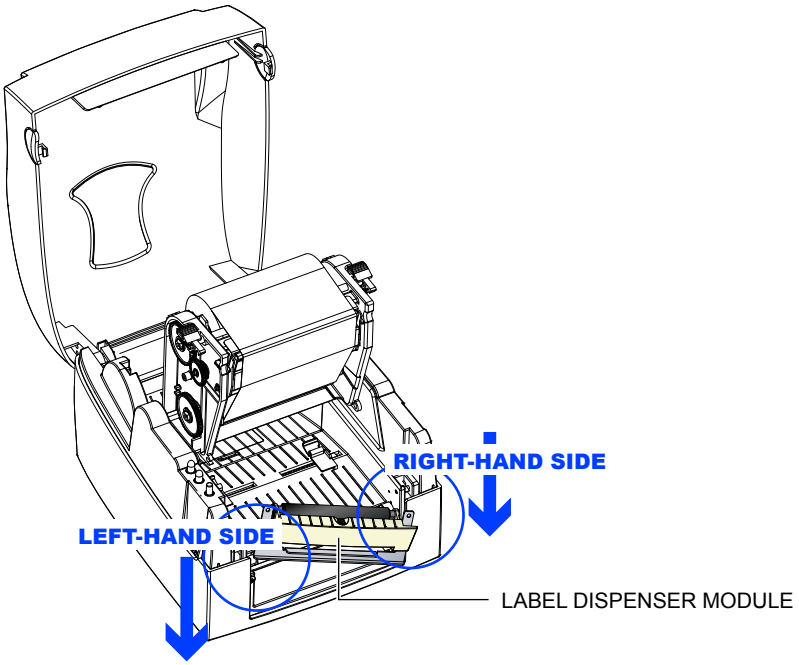

Secure the dispenser using the screws provided for this purpose.

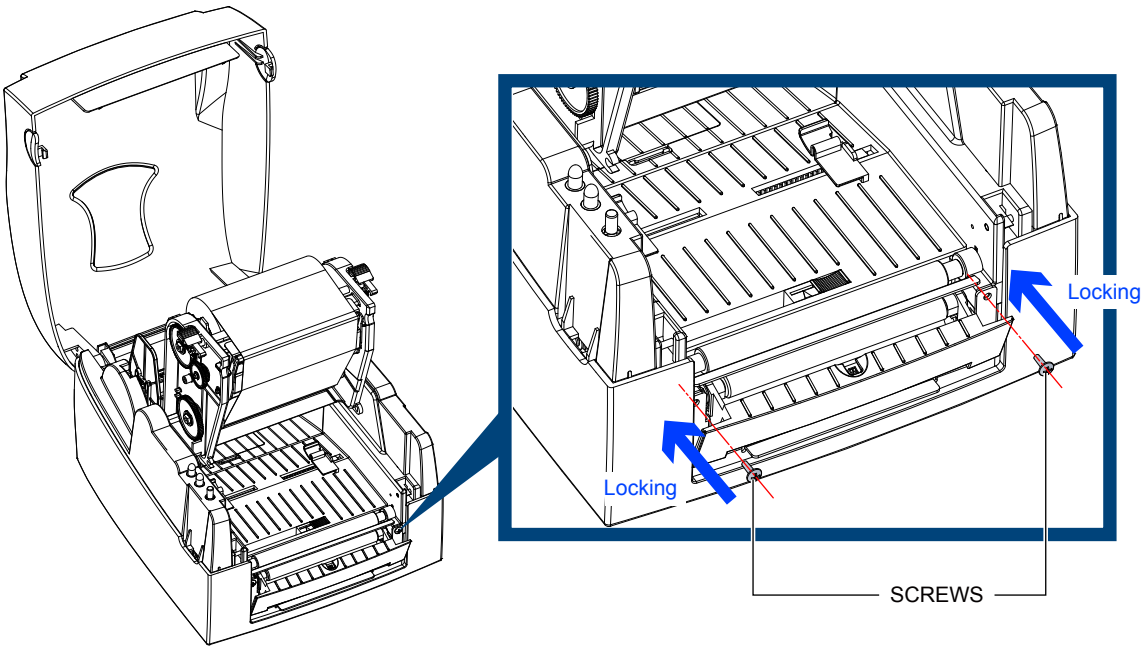

Install The Label Roll Module On The Printer

Pass the paper through the guides.

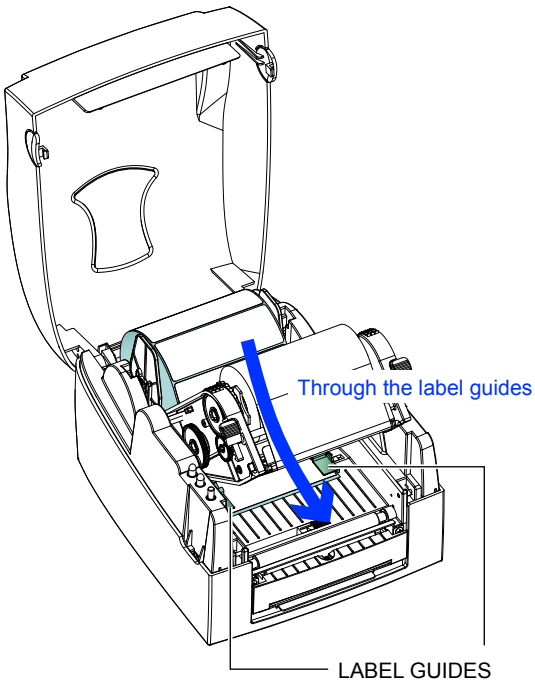

NOTICE

- Labels should be at least 25 mm high.

Remove the first labels from the liner, so you can pull the liner through the guides.

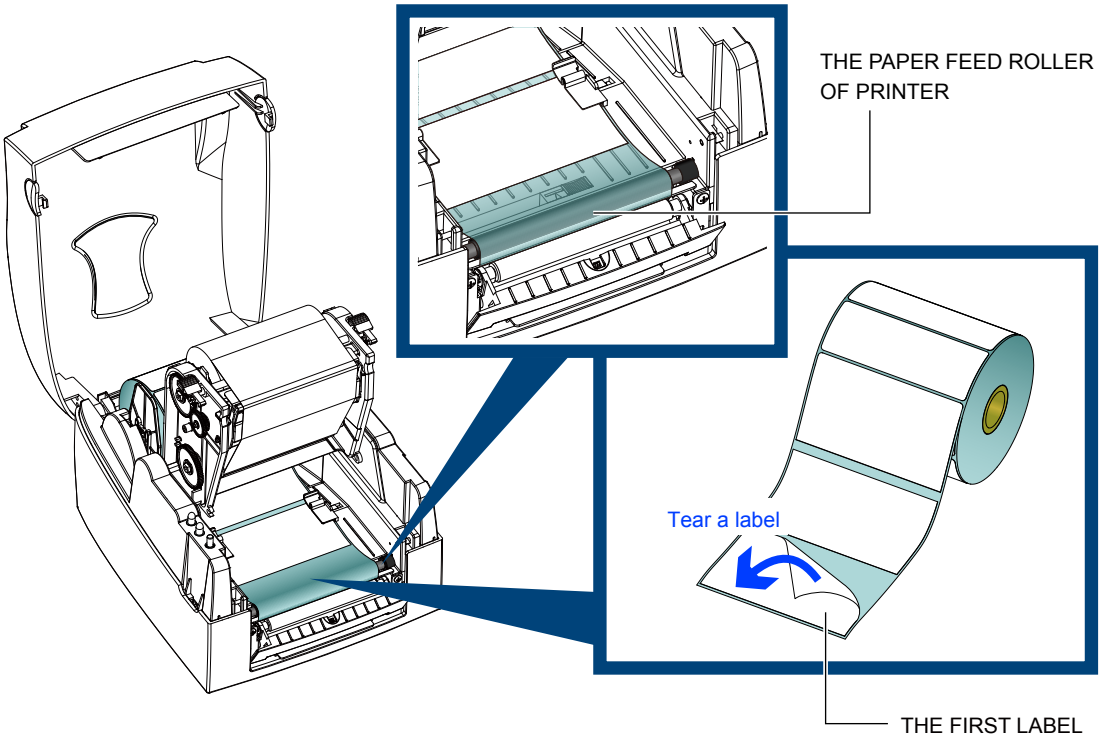

Pass the label stock through the printer as shown in the illustration on the right.

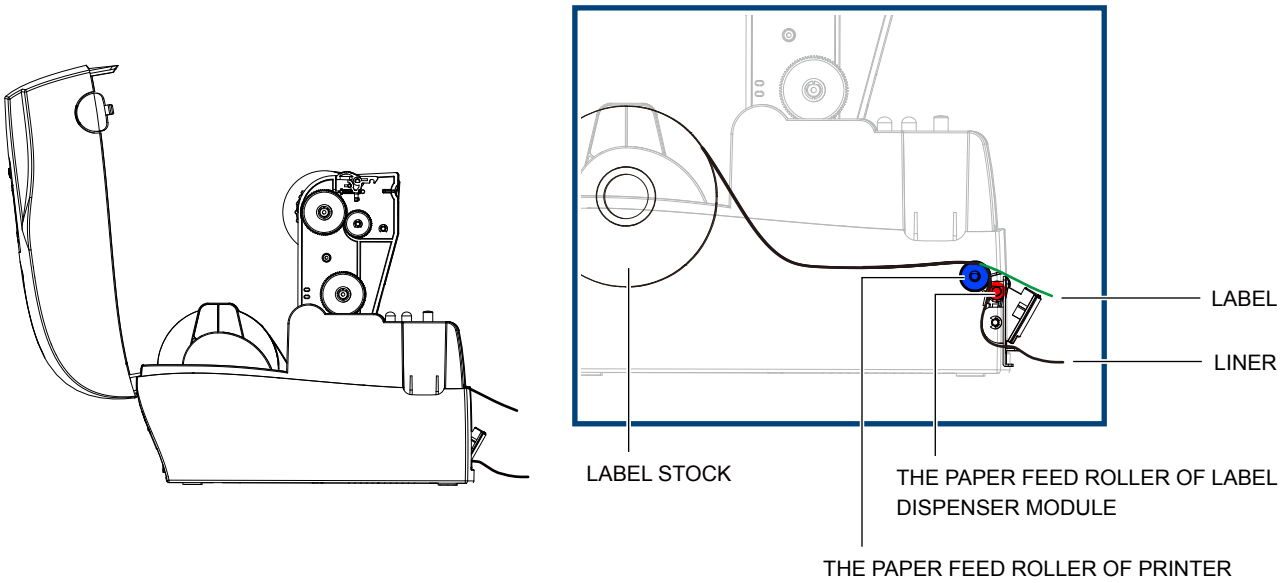

Close the label dispenser and the print mechanism. The installation is completed now.

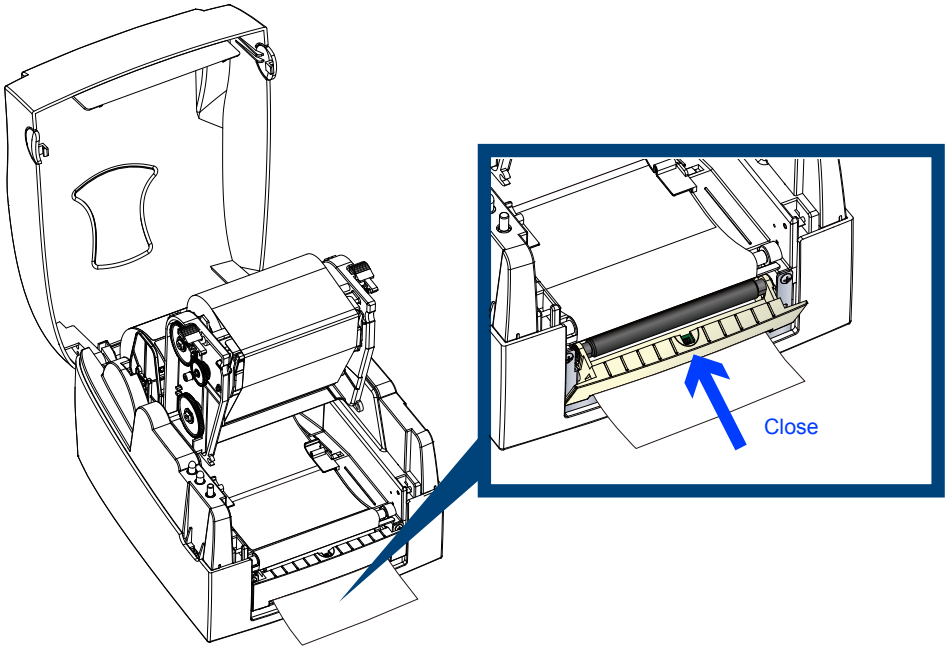

Press the FEED button to feed the label. The label will be peeled from the liner while it passes through the label dispenser.

NOTICE

- There is a paper sensor on the Label Dispenser module. It will stop the printing if it is covered by label. Remove the last printed label and the printer will then continue to print next label.

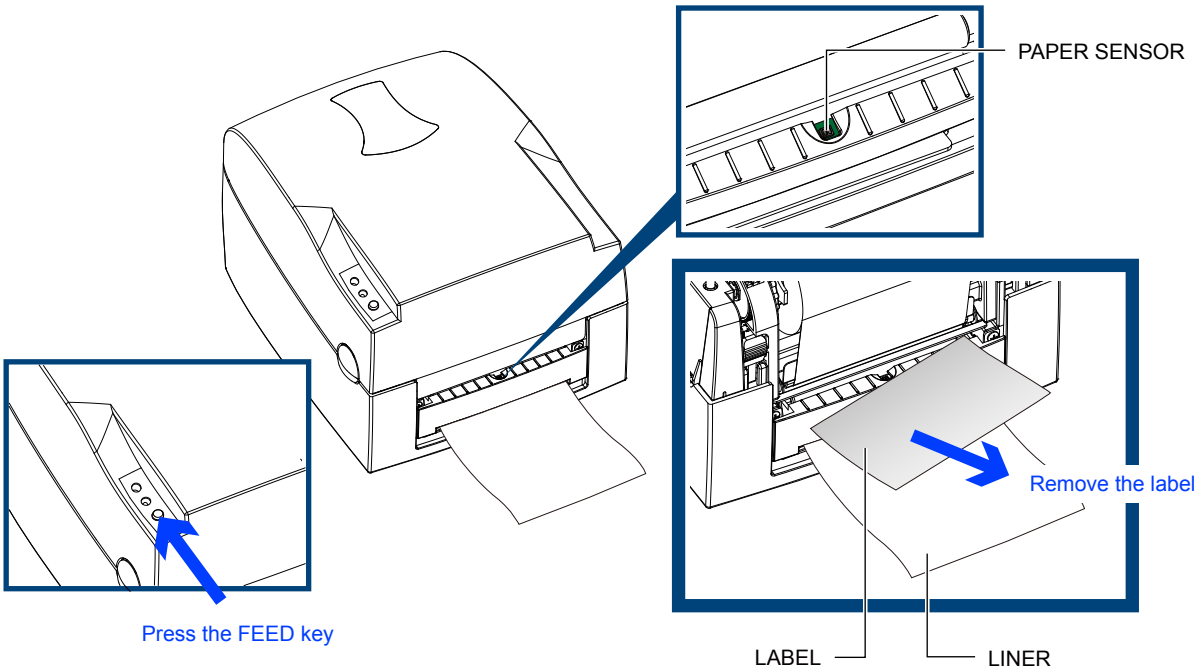

5-2 Installing The Cutter

The Overview Of The Cutter

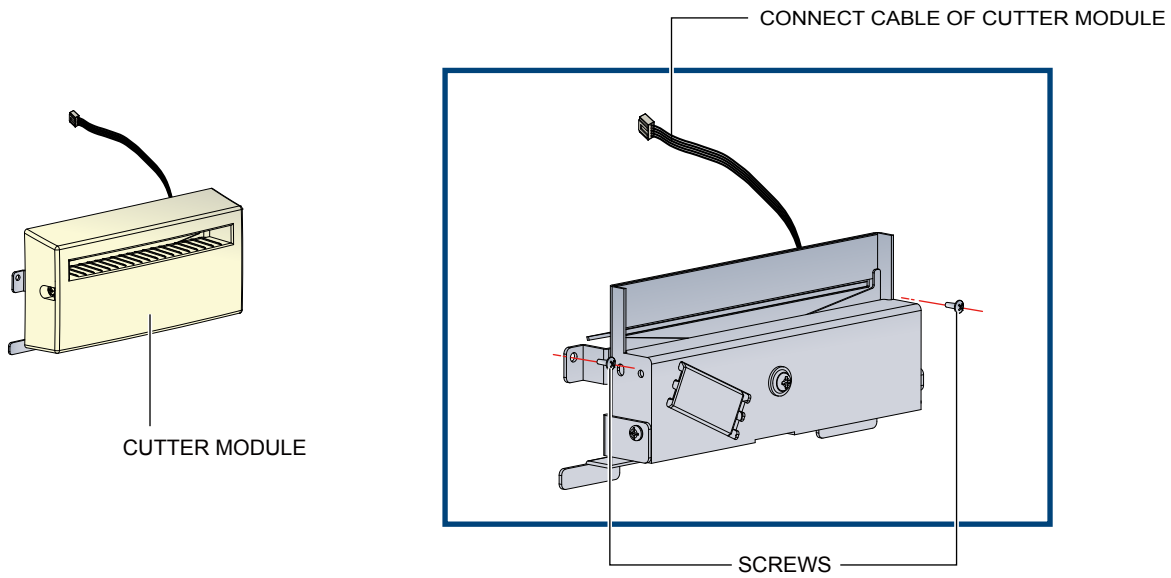

NOTICE

- Remember to switch off the printer before installing the cutter.
- Do not use to cut adhesive labels! Glue residue will be left on the cutter blade and impair its functioning. The cutter has a blade life of 400,000 cuts when using paper liner which is 250μm thick and 3 inches wide.
- You can cut paper with a max. width of 116 mm.

SUGGESTION

- With the cutter installed, set the stop position in QLabel to 28, or the E value to 28.

Before installing the cutter module, remove the cutter cover as shown in the illustration.

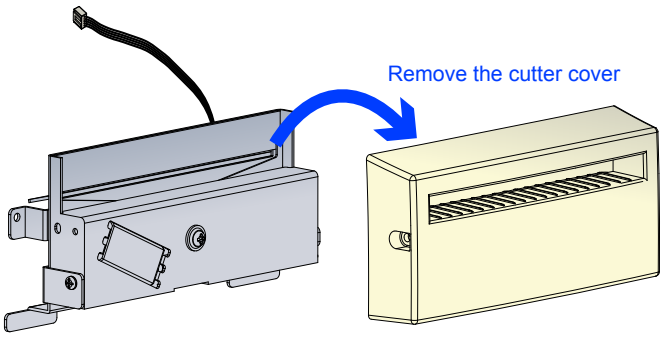

Preparation Steps

Please complete the preparation steps before installing the label dispenser.

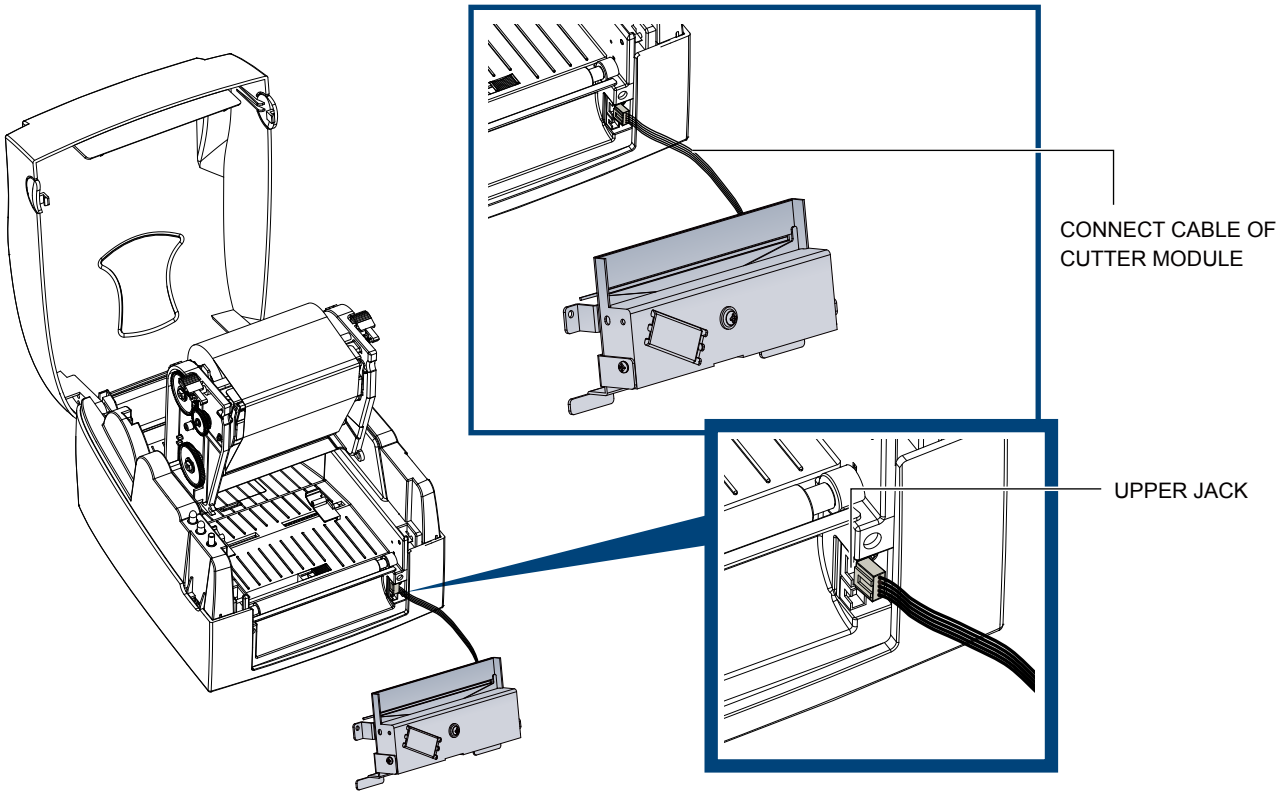

NOTICE

- The printer must be switched off, or the motherboard may be damaged!
- There are 2 jacks : the lower jack is for the dispenser, the upper jack for the cutter.

Secure the cutter using the screws provided for this purpose.

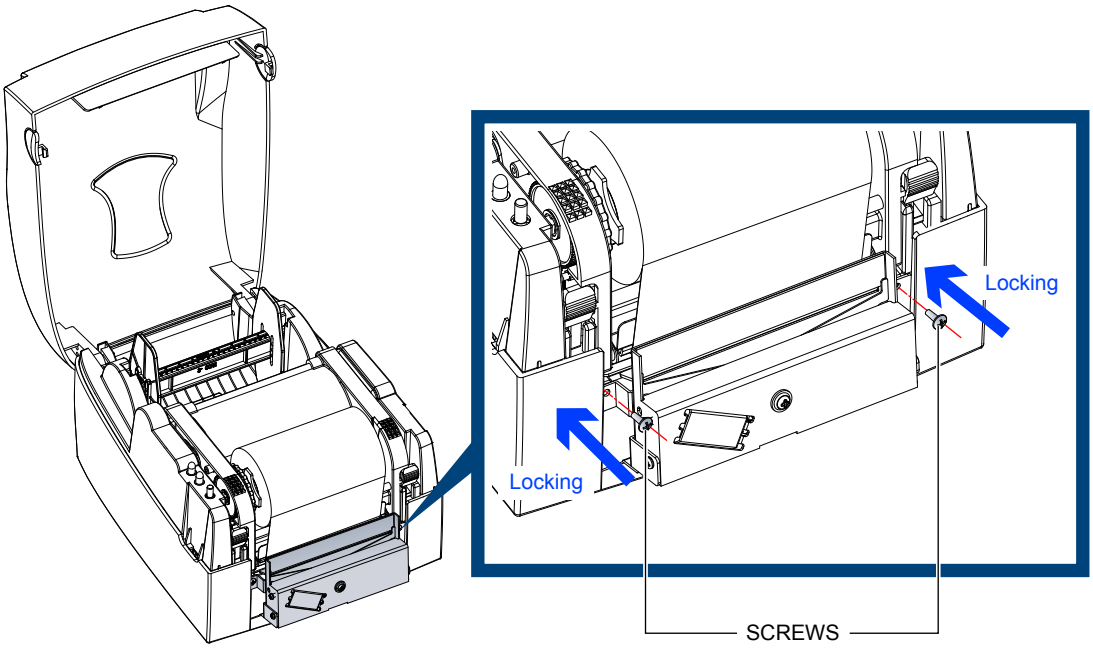

Secure the cutter cover using the screws provided for this purpose.

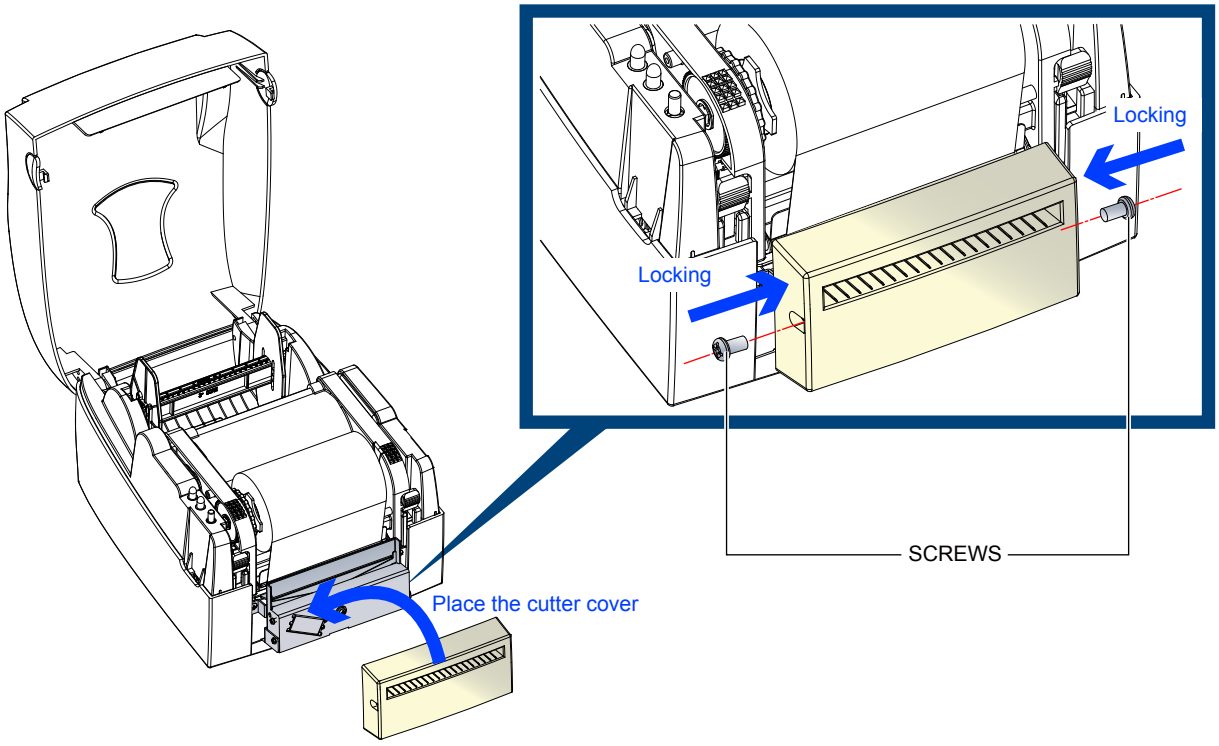

Pass the labels through the guides.
Close the printing mechanism.

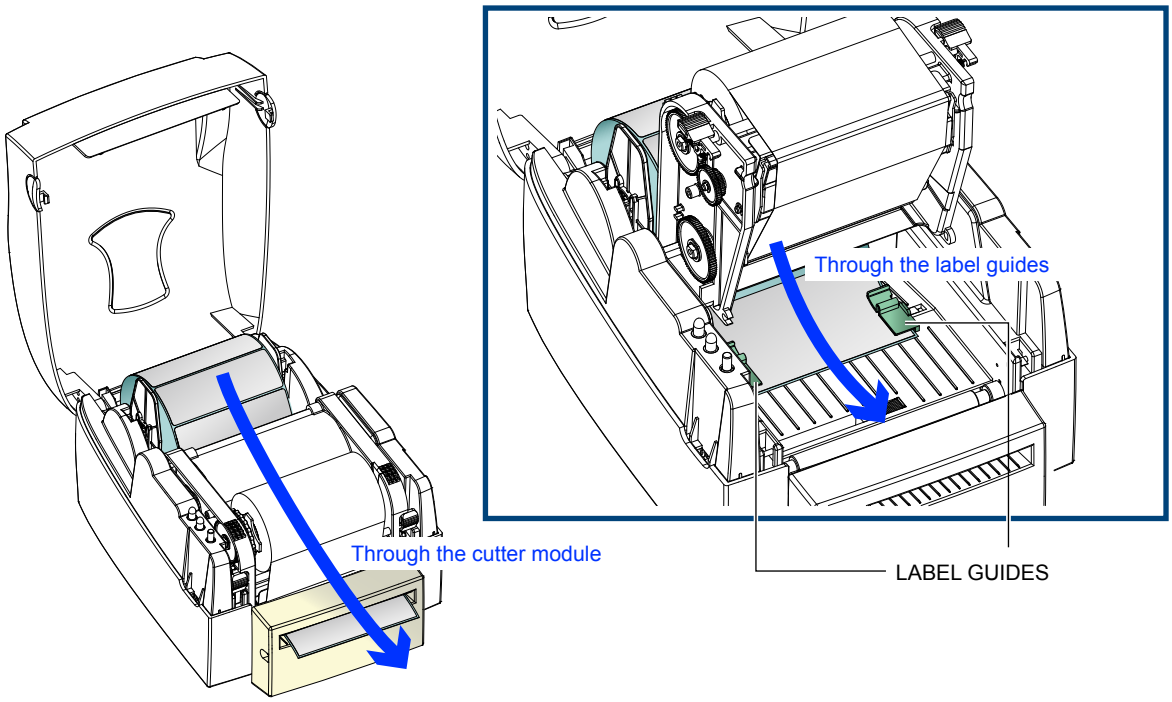

To finish, press the FEED button to set the label position.

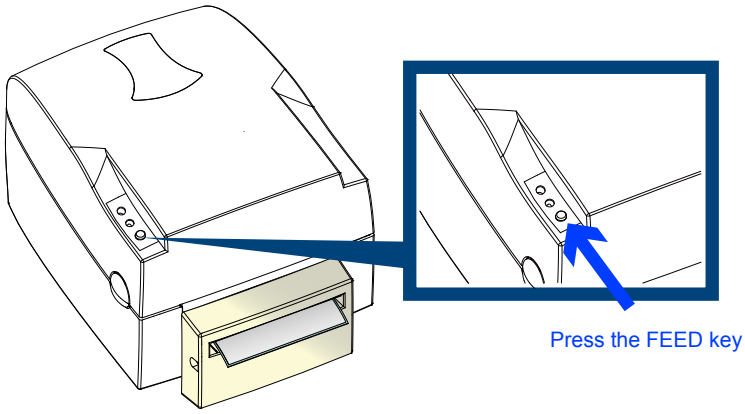

NOTICE

- We advise against using inside wound label stock.

6-1 Cleaning The Print Head

Dirt on the print head or ribbon, or glue residue from the label stock may result in inadequate print quality. The printer cover must therefore always be closed during printing. Keeping dirt and dust away from the paper or labels ensures a good print quality and a longer lifespan of the print head.

Cleaning Steps

Here is how you clean the print head.

1. Switch off the printer.
2. Open the printer cover.
3. Release the printing mechanism and lift it.
4. Remove the ribbon.
5. To remove any label residue or other dirt from the print head (see blue arrow), please use a soft lint-free cloth dipped in alcohol.

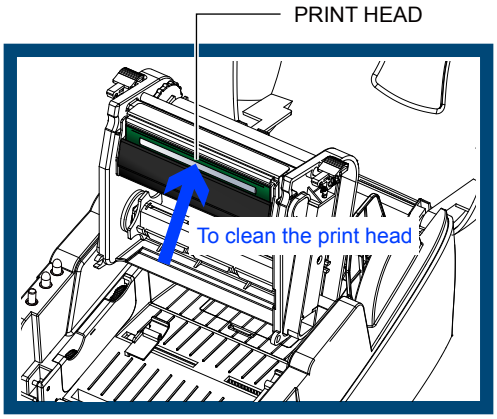

NOTICE

- The print head should be cleaned once a week.
- Please make sure that there are no metal fragments or other hard particles on the soft cloth used to clean the print head.

6-2 Adjusting The Print Head Pressure

When printing on special media (with varying material thickness), the print quality may suffer. You will then need to adjust the print head pressure.

Adjustment Steps

1. Open the printer cover.
2. Remove the ribbon.
3. Use a screw driver and slowly turn the adjustment screws for the print head to increase or reduce the print head pressure.

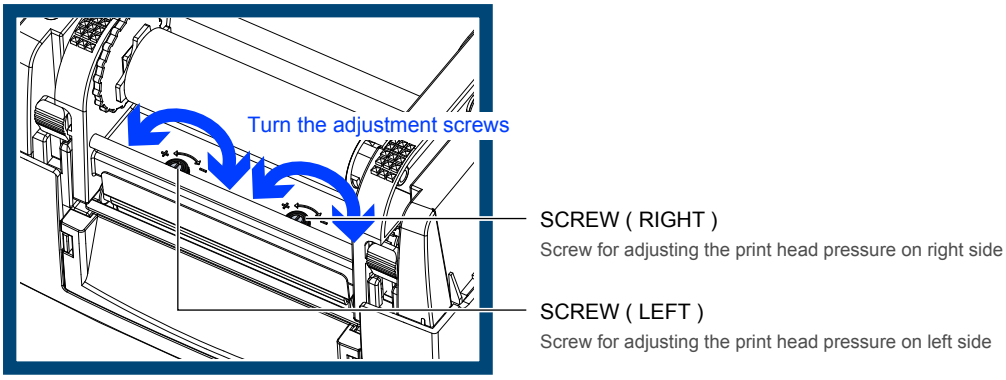

6-3 Adjusting The Print Line

When the print line is incorrectly set, the print quality on one side of the medium may suffer.
In such a case, the print line must be adjusted so it is positioned parallel to the paper feed roller.

Adjustment Methods

1. To move the print head in direction A as indicated by the blue arrow, turn the adjustment wheel anticlockwise (see arrow 1).
2. To move the print head in direction B as indicated by the blue arrow, turn the adjustment wheel clockwise (see arrow 2).

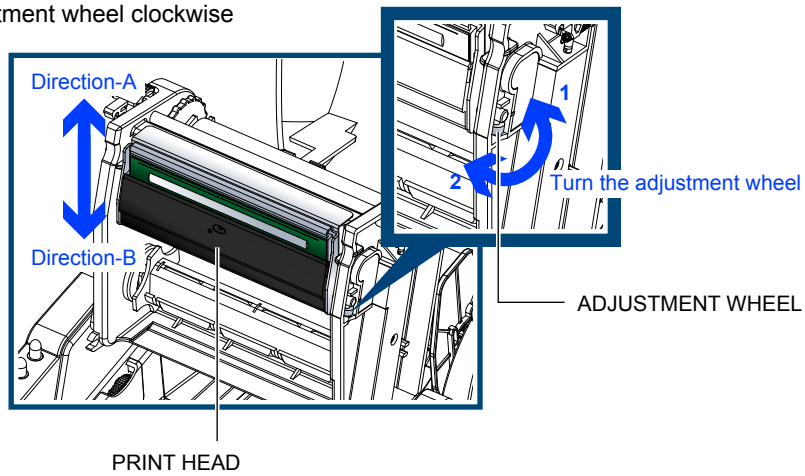

6-4 Adjusting The Cutter

While using the cutter, paper jams may occur. Please follow the below steps to clean the paper jam.
A socket head screw for adjusting the cutter is located on the bottom of cutter module, as shown in below illustration.

Cleaning Steps

1. Switch off the printer.
2. Use a Philips screwdriver to turn the socket head screw and release the knife.
3. When you have cleared the paper jam, switch on the printer again. The cutter will automatically reset.

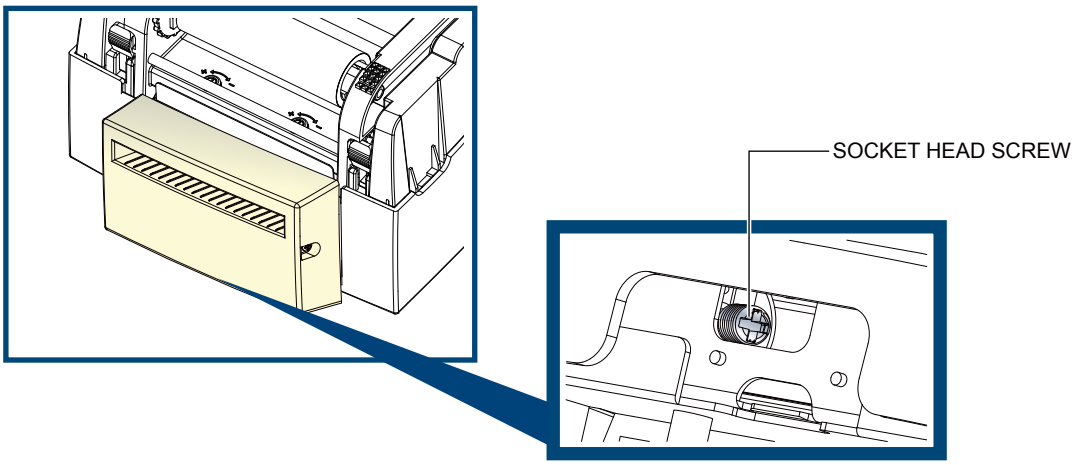

NOTICE

- Labels should be at least 30 mm high to ensure correct functioning of the cutter.

6-5 Troubleshooting

Problem	Solution
The printer is switched on but the display does not light up.	◆ Check the power supply.
One or both LEDs light up red and printing is interrupted.	◆ Check the software settings (driver settings) or command codes. ◆ Look for the error alert in the table in **Section3-3 Error alerts** . ◆ Check whether the cutter is functioning normally and whether it is cutting at all. (Only if a cutter is installed.)
The label stock passes through the printer but no image is printed.	◆ Please make sure that the label stock is loaded the right way up and that it is suitable material. ◆ Please make sure that the ribbon is loaded correctly.
The label stock jams during printing.	◆ Clear the paper jam. Remove any label material left on the thermal print head and clean the print head using a soft lint-free cloth dipped in alcohol.
There is no printed image on part of the label or the image is blurred.	◆ Check the thermal print head for dust or other dirt (label material or ribbon residue). ◆ Check for errors in the application software. ◆ Check the ribbon for wrinkles. ◆ Check the power supply. ◆ Run a self test (**Section 3-2**) and check the test print pattern to see whether the print head prints over the entire width of the medium. ◆ Check the quality of the print medium.
The printed image is positioned incorrectly or a label is missed out during printing.	◆ Run the Label size calibration function. **(Section 3-2)** ◆ Check the label height setting. ◆ Check whether there is paper or dust covering the sensor. ◆ Check the paper guide settings.
The cutter does not cut off the labels in a straight line.	◆ Check whether the label stock is positioned straight.
The cutter does not cut off the labels completely.	◆ Check whether the label is more than 0.2 mm thick.
When using the cutter, the labels are not fed through or cut off incorrectly.	◆ Check whether the cutter has been correctly installed. ◆ Check whether the paper guides are functioning correctly.
The label dispenser is not functioning normally.	◆ Check whether there is dust on the label dispenser. ◆ Check whether the label stock is positioned correctly.

NOTICE

- If any problems occur that are not described here, please contact your dealer.

APPENDIX Product Specifications

Model		G500-U	G500 G500-UP	G500-US	G500 G500-UES	G530 G530-UP	G530 G530-UES
Print Method		Thermal Transfer/Direct Thermal					
Resolution		203 dpi (8 dot/mm)				300 dpi (12 dots/mm)	
Print Speed		5 IPS (127 mm/s)				4 IPS (102 mm/s)	
Print Width		4.25" (108 mm)				4.16" (105.7 mm)	
Print Length		Min. 0.16" (4 mm)**; Max. 68" (1727 mm)				Min. 0.16" (4 mm)**; Max. 30" (762 mm)	
Processor		32 bit RISC CPU					
Memory	Flash	8 MB Flash (4 MB for user storage)					
	SDRAM	16 MB					
Sensor Type		Adjustable reflective sensor 2 fixed transmissive sensors, central aligned					
Media	Types	Continuous form, gap labels, black mark sensing, and punched hole; label length set by auto sensing or programming					
	Width	1" (25.4 mm) Min. - 4.64" (118 mm) Max.					
	Thickness	0.003" (0.06 mm) Min. - 0.01" (0.25 mm) Max.					
	Label Roll Diameter	Max. 5" (127 mm)					
	Core Diameter	1" (25.4 mm), 1.5" (38.1 mm), 3" (76.2 mm)					
Ribbon	Types	Wax, wax / resin, resin					
	Length	981' (300 m)					
	Width	Min. 1.18" (30 mm) – Max. 4.33" (110 mm)					
	Ribbon Roll Diameter	2.67" (68 mm)					
	Core Diameter	1" (25.4 mm)					
Printer Language		EZPL, GEPL, GZPL, GDPL auto switch					
Software	Label Design Software	GoLabel (for EZPL only)					
	Driver	Vista, Windows 7, Windows 8 & 8.1, Windows 10, Windows Server 2008 R2, 2012, 2012 R2, 2016, 2019, MAC , Linux					
	SDK	Win CE, .NET, Windows Vista, Windows 7, Windows 8 & 8.1, Windows 10, Android, Mac, iOS					
Resident Fonts	Bitmap Fonts	6, 8, 10, 12, 14, 18, 24, 30, 16x26 and OCR A&B Bitmap fonts 90°, 180°, 270° rotatable, single characters 90°, 180°, 270° rotatable Bitmap fonts 8 times expandable in horizontal and vertical directions					
	Scalable Fonts	90°, 180°, 270° rotatable					
Download Fonts	Bitmap Fonts	90°, 180°, 270° rotatable, single characters 90°, 180°, 270° rotatable					
	Asian Fonts	90°, 180°, 270° rotatable and 8 times expandable in horizontal and vertical directions					
	Scalable Fonts	90°, 180°, 270° rotatable					
Barcodes	1-D Bar Codes	China Postal Code, Codabar, Code 11, Code 32,Code 39, Code 93, Code 128 (subset A, B, C), EAN-8/ EAN-13 (with 2 & 5 digits extension), EAN 128, FIM, German Post Code, GS1 DataBar, HIBC, Industrial 2 of 5 , Interleaved 2-of-5 (I 2 of 5), Interleaved 2-of-5 with Shipping Bearer Bars, ISBT-128, ITF 14, Japanese Postnet, Logmars, MSI, Postnet, Plessey, Planet 11 & 13 digit, RPS 128, Standard 2 of 5, Telepen, Matrix 2 of 5 , UPC-A/UPC-E (with 2 or 5 digit extension), UCC/EAN-128 K-Mart and Random Weight					
	2-D Bar Codes	Aztec code, Code 49,Codablock F , Datamatrix code, MaxiCode, Micro PDF417, Micro QR code, PDF417 ,QR code, TLC 39, GS1 Composite					
Code Pages		Codepage 437, 850, 851, 852, 855, 857, 860, 861, 862, 863, 865, 866, 869, 737 Windows 1250, 1251, 1252, 1253, 1254, 1255, 1257 Unicode (UTF8, UTF16)					
Graphics		Resident graphic file types are BMP and PCX, other graphic formats are downloadable from the software					
Interfaces		USB Device	USB Device Parallel Port	USB Device Serial Port	USB Device Serial Port Ethernet	USB Device Parallel Port	USB Device Serial Port Ethernet
Control Panel		Two bi-color status-LEDs: Ready, Status Control key: FEED					
Power		Auto Switching 100-240VAC, 50-60Hz					
Environment	Operation Temperature	41°F to 104°F (5°C to 40°C)					
	Storage Temperature	-4°F to 122°F (-20°C to 50°C)					
Humidity	Operation	30-85%, non-condensing					
	Storage	10-90%, non-condensing					
Agency Approvals		CE (EMC), FCC Class A, CB, CCC ,cUL ,KCC ,BIS ,EAC					
Dimension	Length	11.2" (285 mm)					
	Height	6.8" (171 mm)					
	Width	8.9" (226 mm)					
Weight		6 lbs (2.72 Kg), excluding consumables					
Options & Accessories		Cutter module Label Dispenser External label roll holder for 10" (250 mm) O.D. label rolls External label rewinder					

* Specifications are subject to change without notice. All company and/or product names are trademarks and/or registered trademarks of their respective owners.

** Minimum print height and maximum print speed specification compliance can be dependent on non-standard material variables such as label type, thickness, spacing, liner construction, etc. Godex is pleased to test non-standard materials for minimum print height and maximum print speed capability.

APPENDIX Product Specifications

Model		G525	G535
Print Method		Thermal Transfer/Direct Thermal	
Resolution		203 dpi (8 dot/mm)	300 dpi (12 dots/mm)
Print Speed		5 IPS (127 mm/s)	4 IPS (102 mm/s)
Print Width		4.25" (108 mm)	4.16" (105.7 mm)
Print Length		Min. 0.16" (4 mm)** ; Max. 78.74" (2000 mm)	Min. 0.16" (4 mm)**; Max. 78.74" (2000 mm)
Processor		32 bit RISC CPU	
Memory	Flash	8 MB Flash (4 MB for user storage)	
	SDRAM	16 MB	
Sensor Type		Adjustable reflective sensor 2 fixed transmissive sensors, central aligned	
Media	Types	Continuous form, gap labels, black mark sensing, and punched hole; label length set by auto sensing or programming	
	Width	1" (25.4 mm) Min. - 4.64" (118 mm) Max.	
	Thickness	0.0024" (0.06 mm) Min. - 0.01" (0.25 mm) Max.	
	Label Roll Diameter	Max. 5" (127 mm)	
	Core Diameter	1" (25.4 mm), 1.5" (38.1 mm), 3" (76.2 mm)	
Ribbon	Types	Wax, wax / resin, resin	
	Length	360' (110 m)	
	Width	Min. 1.18" (30 mm) – Max. 4.33" (110 mm)	
	Ribbon Roll Diameter	1.57" (40 mm)	
	Core Diameter	0.5" (12.7 mm)	
Printer Language		EZPL, GEPL, GZPL, GDPL auto switch	
Software	Label Design Software	GoLabel (for EZPL only)	
	Driver	Vista, Windows 7, Windows 8 & 8.1, Windows 10, Windows Server 2008 R2, 2012, 2012 R2, 2016, 2019, MAC , Linux	
	SDK	Win CE, .NET, Windows Vista, Windows 7, Windows 8 & 8.1, Windows 10, Android, Mac, iOS	
Resident Fonts	Bitmap Fonts	6, 8, 10, 12, 14, 18, 24, 30, 16x26 and OCR A&B Bitmap fonts 90°, 180°, 270° rotatable, single characters 90°, 180°, 270° rotatable Bitmap fonts 8 times expandable in horizontal and vertical directions	
	Scalable Fonts	90°, 180°, 270° rotatable	
Download Fonts	Bitmap Fonts	90°, 180°, 270° rotatable, single characters 90°, 180°, 270° rotatable	
	Asian Fonts	90°, 180°, 270° rotatable and 8 times expandable in horizontal and vertical directions	
	Scalable Fonts	90°, 180°, 270° rotatable	
Barcodes	1-D Bar Codes	China Postal Code, Codabar, Code 11, Code 32,Code 39, Code 93, Code 128 (subset A, B, C), EAN-8/ EAN-13 (with 2 & 5 digits extension), EAN 128, FIM, German Post Code, GS1 DataBar, HIBC, Industrial 2 of 5 , Interleaved 2-of-5 (I 2 of 5), Interleaved 2-of-5 with Shipping Bearer Bars, ISBT-128, ITF 14, Japanese Postnet, Logmars, MSI, Postnet, Plessey, Planet 11 & 13 digit, RPS 128, Standard 2 of 5, Telepen, Matrix 2 of 5 , UPC-A/UPC-E (with 2 or 5 digit extension), UCC/EAN-128 K-Mart and Random Weight	
	2-D Bar Codes	Aztec code, Code 49,Codablock F , Datamatrix code, MaxiCode, Micro PDF417, Micro QR code, PDF417 ,QR code, TLC 39, GS1 Composite	
Code Pages		Codepage 437, 850, 851, 852, 855, 857, 860, 861, 862, 863, 865, 866, 869, 737 Windows 1250, 1251, 1252, 1253, 1254, 1255, 1257 Unicode (UTF8, UTF16)	
Graphics		Resident graphic file types are BMP and PCX, other graphic formats are downloadable from the software	
Interfaces		• USB 2.0 • Parallel port	• USB 2.0 • Serial port: RS-232 (DB-9) • Ethernet
		• USB 2.0 • Serial port: RS-232 (DB-9) • IEEE 802.3 10/100 Base-Tx Ethernet port (RJ-45) • Parallel port	• USB 2.0 • Parallel port
		• USB 2.0 • Serial port: RS-232 (DB-9) • Ethernet	• USB 2.0 • Serial port: RS-232 (DB-9) • IEEE 802.3 10/100 Base-Tx Ethernet port (RJ-45) • Parallel port
Control Panel		Two bi-color status-LEDs: Ready, Status Control key: FEED	
Power		Auto Switching 100-240VAC, 50-60Hz	
Environment	Operation Temperature	41°F to 104°F (5°C to 40°C)	
	Storage Temperature	-4°F to 122°F (-20°C to 50°C)	
Humidity	Operation	30-85%, non-condensing	
	Storage	10-90%, non-condensing	
Agency Approvals		CE(EMC) ,FCC Class A, CB, UL	
Dimension	Length	11.2" (285 mm)	
	Height	6.8" (171 mm)	
	Width	8.9" (226 mm)	
Weight		6 lbs (2.72 Kg), excluding consumables	
Options & Accessories		Cutter module Label Dispenser External label roll holder for 10" (250 mm) O.D. label rolls External label rewinder	

* Specifications are subject to change without notice. All company and/or product names are trademarks and/or registered trademarks of their respective owners.

** Minimum print height and maximum print speed specification compliance can be dependent on non-standard material variables such as label type, thickness, spacing, liner construction, etc. Godex is pleased to test non-standard materials for minimum print height and maximum print speed capability.

Pinout description

Parallel Port

Handshaking: DSTB is sent to the printer, BUSY to the host computer.

Interface Cable: Parallel cable compatible with IBM computers.

Pinout: See below.

Pin NO.	Function	Transmitter
1	/Strobe	host / printer
2-9	Data 0-7	host
10	/Acknowledge	printer
11	Busy	printer
12	/Paper empty	printer
13	/Select	printer
14	/Auto-Linefeed	host / printer
15	N/C	
16	Signal Gnd	
17	Chasis Gnd	
18	+5V,max 500mA	
19-30	Signal Gnd	host
31	/Initialize	host / printer
32	/Error	printer
33-35	N/C	
36	/Select-in	host / printer

Serial Port

Default Settings: Baud rate 9600, no parity, 8 data bits, 1 stop bit, XON/XOFF protocol and RTS/CTS.

RS232 HOUSING (9-pin to 9-pin)			
DB9 Socket			DB9 Plug
---	1	1	+5V,max 500mA
RXD	2	2	TXD
TXD	3	3	RXD
N/C	4	4	N/C
GND	5	5	GND
DSR	6	6	RTS
RTS	7	7	CTS
CTS	8	8	RTS
N/C	9	9	N/C
PC			Printer

USB

Connector Type : Type B

Pin NO.	1	2	3	4
Function	VBUS	D-	D+	GND