Dell PowerEdge R530

Owner's Manual

Regulatory Model: E29S Series
Regulatory Type: E29S001

Notes, cautions, and warnings

NOTE: A NOTE indicates important information that helps you make better use of your product.

CAUTION: A CAUTION indicates either potential damage to hardware or loss of data and tells you how to avoid the problem.

WARNING: A WARNING indicates a potential for property damage, personal injury, or death.

Copyright © 2018 Dell Inc. or its subsidiaries. All rights reserved. Dell, EMC, and other trademarks are trademarks of Dell Inc. or its subsidiaries. Other trademarks may be trademarks of their respective owners.

2018 - 02

Rev. A03

Contents

1 Dell PowerEdge R530 system overview..... 8
Supported configurations for the R530 system..... 8
Front panel features..... 10
3.5-inch or 2.5-inch (in a hybrid drive carrier) hot swappable hard drives..... 10
Back panel features..... 13
Back panel features for a non-redundant power supply unit chassis and a redundant power supply unit chassis..... 13
Diagnostic Indicators..... 14
Diagnostic indicators on the front panel..... 14
Hard drive indicator codes..... 16
NIC indicator codes..... 17
Power supply unit indicator codes..... 17
iDRAC Direct LED indicator codes..... 19
Internal dual SD module indicator codes..... 20
Locating Service Tag of your system..... 21

2 Documentation resources..... 22

3 Technical specifications..... 24
Chassis dimensions..... 24
Chassis weight..... 24
Processor specifications..... 25
Power supply unit specifications..... 25
System battery specifications..... 25
Expansion bus specifications..... 25
Memory specifications..... 25
Drive specifications..... 26
Hard drives..... 26
Optical drive..... 26
Ports and connectors specifications..... 26
USB ports..... 26
NIC ports..... 26
Serial connector..... 26
VGA ports..... 27
Internal Dual SD Module..... 27
Video specifications..... 27
Environmental specifications..... 27
Particulate and gaseous contamination specifications..... 28
Standard operating temperature..... 29
Expanded operating temperature..... 29
Expanded operating temperature restrictions..... 29

4 Initial system setup and configuration..... 30
Setting up your system..... 30

iDRAC configuration....30
Options to set up iDRAC IP address....30
Options to install the operating system....31
Methods to download firmware and drivers....31

5 Pre-operating system management applications....32
Options to manage the pre-operating system applications....32
System Setup....32
Viewing System Setup....32
System Setup details....33
System BIOS....33
iDRAC Settings utility....55
Device Settings....56
Dell Lifecycle Controller....56
Embedded system management....56
Boot Manager....56
Viewing Boot Manager....56
Boot Manager main menu....57
PXE boot....57

6 Installing and removing system components....58
Safety instructions....58
Before working inside your system....59
After working inside your system....59
Recommended tools....59
Front bezel (optional)....60
Removing the optional front bezel....60
Installing the optional front bezel....60
System cover....61
Removing the system cover....61
Installing the system cover....62
Inside the system....63
Cooling shroud....65
Removing the cooling shroud....65
Installing the cooling shroud....67
System memory....68
General memory module installation guidelines....69
Mode-specific guidelines....69
Sample memory configurations....69
Removing memory modules....73
Installing memory modules....75
Hard drives....76
Removing a hot swappable hard drive or SSD....77
Installing a hot-swap hard drive....78
Removing a 3.5-inch hard drive blank....79
Installing a 3.5-inch hard drive blank....80
Removing a 2.5-inch hot swappable hard drive from a 3.5-inch hard drive adapter....81
Installing a 2.5-inch hot swappable hard drive into a 3.5-inch hard drive adapter....82
Removing a 3.5-inch hot swappable hard drive adapter from a 3.5-inch hot swappable hard drive carrier....83

Installing a 3.5-inch hard drive adapter into the 3.5-inch hot swappable hard drive carrier 83
Removing a hard drive from a hard drive carrier 84
Installing a hard drive into a hard drive carrier 85
Optical drive (optional) 85
Removing the optional optical drive 85
Installing the optional optical drive 86
Cooling fans 87
Removing a cooling fan 88
Installing a cooling fan 89
Internal USB memory key (optional) 90
Replacing the optional internal USB memory key 91
Expansion cards and expansion card riser 92
Expansion card installation guidelines 92
Removing an expansion card from the system board 93
Installing an expansion card on the system board 95
Removing the optional expansion card riser 96
Installing the optional expansion card riser 97
Removing an expansion card from the expansion card riser 98
Installing an expansion card into the expansion card riser 99
iDRAC port card (optional) 101
Removing the iDRAC ports card 101
Installing the iDRAC ports card 102
SD vFlash card (optional) 104
Removing the optional SD vFlash card 104
Internal dual SD module (optional) 104
Removing an internal SD card 104
Installing an internal SD card 105
Removing the optional internal dual SD module 107
Installing the optional internal dual SD module 108
Integrated storage controller card 108
Removing the integrated storage controller card 109
Installing the integrated storage controller card 110
Processors and heat sinks 111
Removing a heat sink 112
Removing a processor 113
Installing a processor 116
Installing a heat sink 118
Power supply units (PSU) 119
Hot spare feature 120
Removing the power supply unit blank 120
Installing the power supply unit blank 121
Removing an AC power supply unit 122
Installing an AC power supply unit 123
Non-redundant AC power supply unit (cabled) 124
Wiring instructions for a DC power supply unit 128
Removing a DC power supply unit 130
Installing a DC power supply unit 131
Power interposer board 133
Removing the power interposer board 133
Installing the power interposer board 134

System battery....135
Replacing the system battery....135
Hard drive backplane....136
Removing the hard drive backplane....136
Installing the hard drive backplane....138
Control panel....139
Removing the control panel board....139
Installing the control panel board....141
Removing the control panel....142
Installing the control panel....143
System board....144
Removing the system board....144
Installing the system board....147
Restoring the Service Tag by using the Easy Restore feature....149
Entering the system Service Tag by using System Setup....150
Trusted Platform Module....150
Installing the Trusted Platform Module....150
Initializing the TPM for BitLocker users....151
Initializing the TPM for TXT users....151

7 Troubleshooting your system....152
Troubleshooting system startup failure....152
Troubleshooting external connections....152
Troubleshooting the video subsystem....153
Troubleshooting a USB device....153
Troubleshooting iDRAC Direct (USB XML configuration)....154
Troubleshooting iDRAC Direct (Laptop connection)....154
Troubleshooting a serial I/O device....154
Troubleshooting a NIC....155
Troubleshooting a wet system....155
Troubleshooting a damaged system....156
Troubleshooting the system battery....157
Troubleshooting power supply units....157
Troubleshooting power source problems....157
Troubleshooting power supply unit problems....158
Troubleshooting cooling problems....158
Troubleshooting cooling fans....159
Troubleshooting system memory....159
Troubleshooting an internal USB key....160
Troubleshooting an SD card....160
Troubleshooting an optical drive....161
Troubleshooting a tape backup unit....162
Troubleshooting a hard drive....162
Troubleshooting a storage controller....163
Troubleshooting expansion cards....163
Troubleshooting processors....164
System messages....165
Warning messages....165
Diagnostic messages....165
Alert messages....165

8 Using system diagnostics..... 166
Dell Embedded System Diagnostics..... 166
When to use the Embedded System Diagnostics..... 166
Running the Embedded System Diagnostics from Boot Manager..... 166
Running the Embedded System Diagnostics from the Dell Lifecycle Controller..... 166
System diagnostic controls..... 167

9 Jumpers and connectors 168
System board jumper settings..... 168
System board connectors..... 169
Disabling a forgotten password..... 170

10 Getting help..... 172
Contacting Dell..... 172
Accessing system information by using QRL..... 172
Quick Resource Locator (QRL)..... 173

1

Dell PowerEdge R530 system overview

The Dell PowerEdge R530 is a rack server that supports up to:

- Two processors based on the Intel Xeon E5-2600 v3 or E5-2600 v4 product family
- 12 DIMMs
- Eight drive bays for hard drives or SSDs

The PowerEdge R530 system is available in the following configurations:

- Redundant power supply configuration
- Non-redundant power supply configuration

Topics:

- Supported configurations for the R530 system
- Front panel features
- Back panel features
- Diagnostic Indicators
- Locating Service Tag of your system

Supported configurations for the R530 system

The Dell PowerEdge R530 system supports the following configurations:

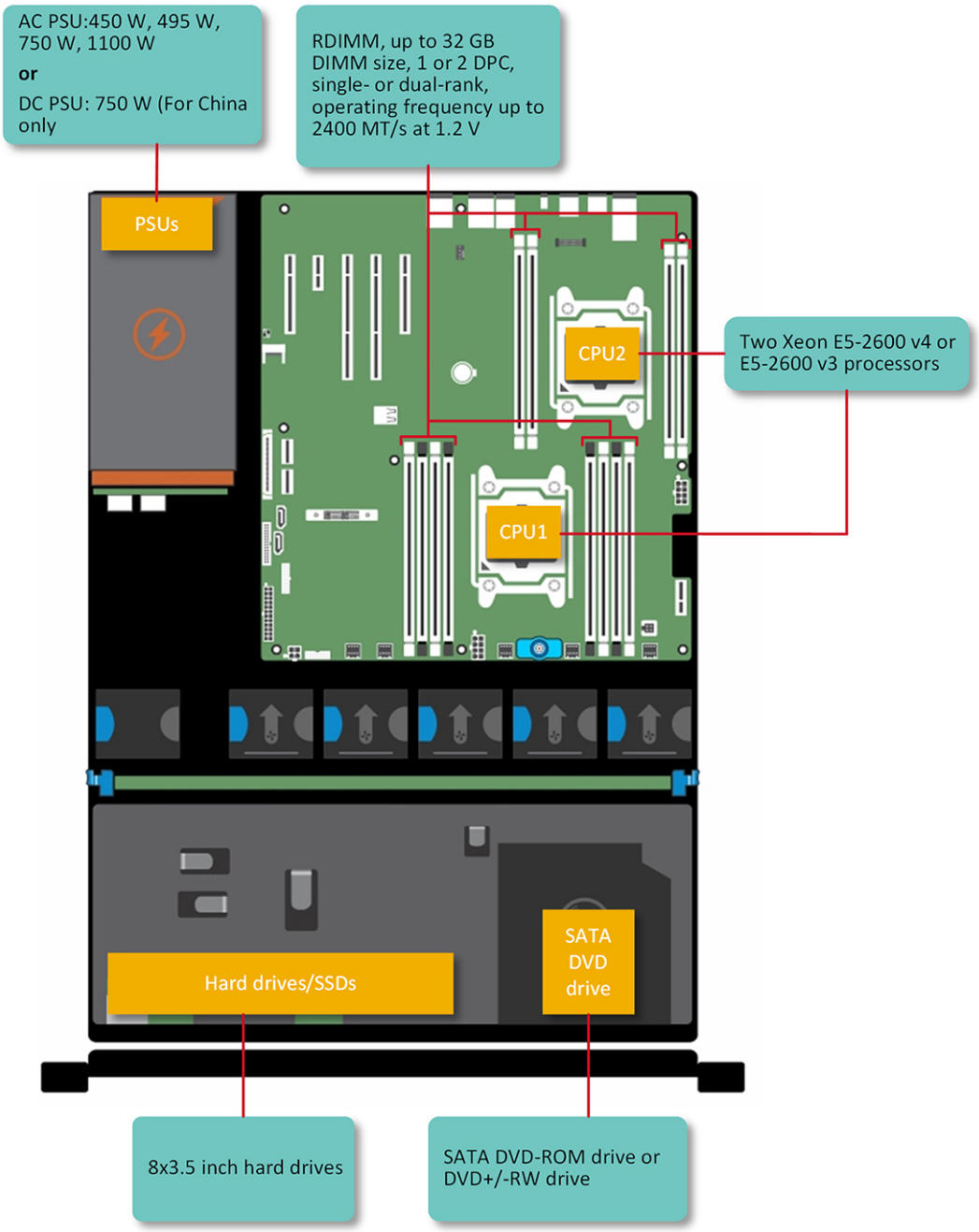

Figure 1. Supported configurations for the PowerEdge R530 system

Front panel features

The front panel provides access to the features available on the front of the server, such as the power button, NMI button, system identification tag, system identification button, and USB and VGA ports. The diagnostic LEDs or the LCD panel is prominently located on the front panel. The hot swappable hard drives are accessible from the front panel.

3.5-inch or 2.5-inch (in a hybrid drive carrier) hot swappable hard drives

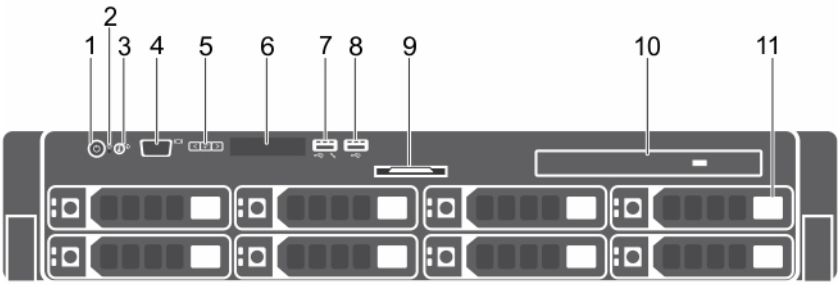

Figure 2. 3.5-inch or 2.5-inch (in a hybrid drive carrier) hot swappable hard drives

1. Power button
2. NMI button
3. System identification button
4. Video connector
5. LCD menu buttons
6. LCD panel
7. USB management port or iDRAC Direct
8. USB connector
9. Information tag
10. Optical drive (optional)
11. Hard drive or SSD bay

Table 1. 3.5-inch or 2.5-inch (in a hybrid drive carrier) hot swappable hard drives

Item	Indicator, Button, or Connector	Icon	Description
1	Power-on indicator, power button	⏻	Press the power button to turn the system on or off. The indicator on the button indicates if the system is on or off. **NOTE: To gracefully shut down an ACPI-compliant operating system, press the power button.**
2	NMI button		Press the NMI button to troubleshoot software and device driver errors when running certain operating systems. Use the end of a paper clip to press the NMI button. **NOTE: Use the NMI button only if directed to do so by qualified support personnel or by the operating system documentation.**
3	System identification button	ⓘ	Press the system ID button: • To locate a particular system within a rack. • To turn the system ID on or off. To reset iDRAC, press and hold the button for more than 15 seconds. **NOTE: To reset iDRAC using system ID, ensure that the system ID button is enabled in the iDRAC setup.**

Item	Indicator, Button, or Connector	Icon	Description
			NOTE: If the system stops responding during POST, press and hold the system ID button (for more than five seconds) to enter the BIOS progress mode.
4	Video connector		Use the video/VGA port to connect a display to the system. For more information about the supported video/VGA port, see the Technical specifications section.
5	LCD menu buttons		Press the LCD menu buttons to navigate the control panel LCD menu.
6	LCD panel		Displays system ID, status information, and system error messages. For more information, see the LCD panel section.
7	USB management port/iDRAC Direct		The USB management port is USB 2.0 compliant. Enables you to connect USB devices to the system or provides access to the iDRAC Direct features. For more information, see the Integrated Dell Remote Access Controller User's Guide at **Dell.com/idracmanuals**.
8	USB connector		Enables you to connect USB devices to the system. The ports are USB 2.0 compliant.
9	Information tag		Displays system information such as service tag, NIC, and MAC address.
10	Optical drive (optional)		One optional SATA DVD-ROM drive or DVD+/-RW drive.
11	Hard drive or SSDs bay		Up to eight 3.5-inch or 2.5-inch (in a hybrid drive carrier) hot swappable hard drives

LCD panel

The LCD panel of your system provides system information, status, and error messages to indicate if the system is functioning correctly or if the system needs attention. For more information about error messages, see the *Dell Event and Error Messages Reference Guide* at **Dell.com/openmanagemanuals** >**OpenManage software**.

- The LCD backlight turns blue during normal operating conditions.
- When the system needs attention, the LCD turns amber, and displays an error code followed by descriptive text.

  NOTE: If the system is connected to a power source and an error is detected, the LCD turns amber regardless of whether the system is turned on or off.
- The LCD backlight is turned off when the system is in standby mode and can be turned on by pressing either the Select, Left, or Right button on the LCD panel.
- The LCD backlight remains off if LCD messaging is turned off using the iDRAC utility, the LCD panel, or other tools.

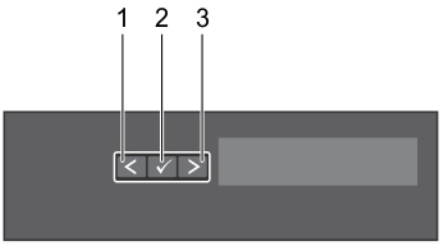

Figure 3. LCD panel features

Table 2. LCD panel features

Item	Button	Description
1	Left	Moves the cursor back in one-step increments.

Item	Button	Description
2	Select	Selects the menu item highlighted by the cursor.
3	Right	Moves the cursor forward in one-step increments. During message scrolling: • Press and hold the button to increase scrolling speed. • Release the button to stop. **NOTE: The display stops scrolling when the button is released. After 45 seconds of inactivity the display starts scrolling.**

Viewing Home screen

The **Home** screen displays user-configurable information about the system. This screen is displayed during normal system operation when there are no status messages or errors. When the system is in standby mode, the LCD backlight turns off after a few minutes of inactivity, if there are no error messages.

Steps

1. To view the **Home** screen, press one of the three navigation buttons (Select, Left, or Right).
2. To navigate to the **Home** screen from another menu, complete the following steps:
   a) Press and hold the navigation button till the up arrow is displayed.
   b) Navigate to the using the up arrow
   c) Select the **Home** icon.
   d) On the **Home** screen, press the **Select** button to enter the main menu.

Setup menu

NOTE: When you select an option in the Setup menu, you must confirm the option before proceeding to the next action.

Option	Description
iDRAC	Select **DHCP** or **Static IP** to configure the network mode. If **Static IP** is selected, the available fields are **IP**, **Subnet (Sub)**, and **Gateway (Gtw)**. Select **Setup DNS** to enable DNS and to view domain addresses. Two separate DNS entries are available.
Set error	Select **SEL** to view LCD error messages in a format that matches the IPMI description in the SEL. This enables you to match an LCD message with an SEL entry. Select **Simple** to view LCD error messages in a simplified user-friendly description. For more information about error messages, see the *Dell Event and Error Messages Reference Guide* at **Dell.com/openmanagemanuals** > **OpenManage software**.
Set home	Select the default information to be displayed on the **Home** screen. See View menu section for the options and option items that can be set as the default on the **Home** screen.

View menu

NOTE: When you select an option in the View menu, you must confirm the option before proceeding to the next action.

Option	Description
iDRAC IP	Displays the **IPv4** or **IPv6** addresses for iDRAC8. Addresses include **DNS** (**Primary** and **Secondary**), **Gateway**, **IP**, and **Subnet** (IPv6 does not have Subnet).
MAC	Displays the MAC addresses for **iDRAC**, **iSCSI**, or **Network** devices.
Name	Displays the name of the **Host**, **Model**, or **User String** for the system.
Number	Displays the **Asset tag** or the **Service tag** for the system.
Power	Displays the power output of the system in BTU/hr or Watts. The display format can be configured in the **Set home** submenu of the **Setup** menu.

Option	Description
Temperature	Displays the temperature of the system in Celsius or Fahrenheit. The display format can be configured in the **Set home** submenu of the **Setup** menu.

Back panel features

The back panel provides access to the features available on the back of the server, such as the system identification button, power supply sockets, cable management arm connectors, iDRAC storage media, NIC ports, and USB and VGA ports. A majority of the expansion card ports can be accessed from the back panel. The hot swappable and cabled power supply units are accessible from the back panel.

Back panel features for a non-redundant power supply unit chassis and a redundant power supply unit chassis

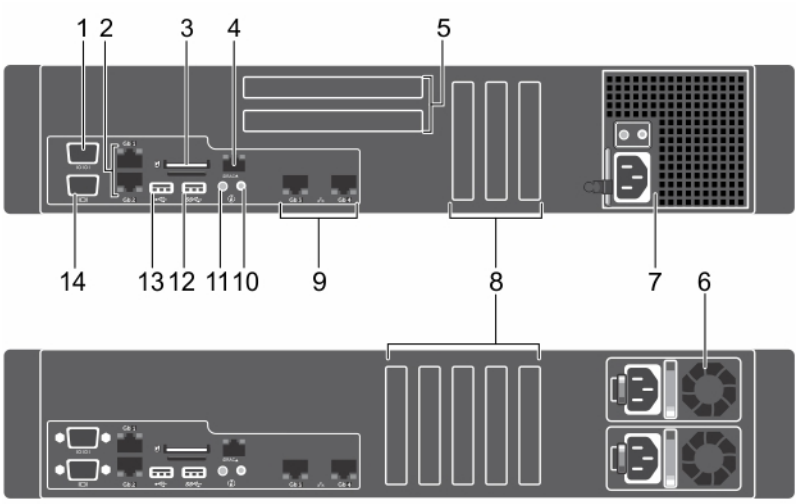

Figure 4. Back panel features for a non-redundant power supply unit chassis and a redundant power supply unit chassis

1. Serial connector
2. Ethernet connectors (2)
3. vFlash media card slot (optional)
4. iDRAC8 Enterprise port
5. Full height PCIe expansion card slots (2)
6. Redundant power supply unit
7. Non-redundant power supply unit
8. Half height PCIe expansion card slots (5)
9. Ethernet connectors (2)
10. System identification connector
11. System identification button
12. USB connector
13. USB connector
14. Video connector

Table 3. Back panel features for a non-redundant power supply unit chassis and a redundant power supply unit chassis

Item	Indicator, button, or connector	Icon	Description
1	Serial port		Use the serial port to connect a serial device to the system. For more information about the supported serial port, see the Technical specifications section.
2	Ethernet connectors (2)		Two integrated 10/100/1000 Mbps Network Interface Card (NIC) connectors or Four integrated connectors that include: • Two 10/100/1000 Mbps NIC connectors • Two 100 Mbps/1 Gbps/10 Gbps SFP+/10 GbE T connectors

Item	Indicator, button, or connector	Icon	Description
3	vFlash media card slot (optional)		Enables you to insert a vFlash media card.
4	iDRAC8 Enterprise port (optional)		Use the iDRAC8 Enterprise port to remotely access iDRAC. For more information, see the *Integrated Dell Remote Access Controller User's Guide* at **Dell.com/idracmanuals**.
5	Full-height PCIe expansion card slots (2)		Enables you to connect up to two full-height PCI Express expansion cards.
6	Redundant power supply unit		**AC** 495 W EPP, 750 W EPP or 1100 W EPP **Or** **DC** 750 W For information about supported PSUs, see the Technical specifications section.
7	Non-Redundant Power Supply Unit		450 W For information about supported PSUs, see the Technical specifications section.
8	Half Height PCIe expansion card slots (5)		Allows you to connect PCIe expansion cards.
9	Ethernet connectors (2)		Integrated 10/100/1000 Mbps NIC connector
10	System identification port		Use the system identification port to connect the system status indicator assembly through the optional cable management arm.
11	System identification button		Press the system ID button: • To locate a particular system within a rack. • To turn the system ID on or off. To reset iDRAC, press and hold the button for more than 15 seconds. **NOTE: To reset iDRAC using system ID, ensure that the system ID button is enabled in the iDRAC setup.** **NOTE: If the system stops responding during POST, press and hold the system ID button (for more than five seconds) to enter the BIOS progress mode.**
12	USB connector		Enables you to connect USB devices to the system. This port is USB 3.0-compliant.
13	USB connector		Enables you to connect USB devices to the system. This port is USB 2.0-compliant.
14	Video/VGA port		Use the video/VGA port to connect a display to the system. For more information about the supported video/VGA port, see the Technical specifications section.

Diagnostic Indicators

The diagnostic indicators on the system front panel display error status during system startup.

Diagnostic indicators on the front panel

NOTE: The diagnostic indicators are not present if the system is equipped with an LCD display.

NOTE: No diagnostic indicators are lit when the system is turned off. To start the system, plug it into a working power source and press the power button.

Table 4. Diagnostic indicators

Icon	Description	Condition	Corrective action
	Health indicator	The indicator turns solid blue if the system is in good health.	None required.
		The indicator flashes amber: • When the system is turned on. • When the system is in standby. • If any error condition exists. For example, a failed fan, PSU, or a hard drive.	Check the System Event Log or system messages for the specific issue. For more information about error messages, see the *Dell Event and Error Messages Reference Guide* at **Dell.com/openmanagemanuals** > **OpenManage software**. The POST process is interrupted without any video output due to invalid memory configurations. See the Getting help section.
	Hard drive indicator	The indicator flashes amber if there is a hard drive error.	Check the System Event Log to determine the hard drive that has an error. Run the appropriate Online Diagnostics test. Restart the system and run embedded diagnostics (ePSA). If the hard drives are configured in a RAID array, restart the system and enter the host adapter configuration utility program.
	Electrical indicator	The indicator flashes amber if the system experiences an electrical error (for example, voltage out of range, or a failed power supply unit (PSU) or voltage regulator).	Check the System Event Log or system messages for the specific issue. If it is due to a problem with the PSU, check the LED on the PSU. Reseat the PSU. If the problem persists, see the Getting help section.
	Temperature indicator	The indicator flashes amber if the system experiences a thermal error (for example, the ambient temperature is out of range or fan failure).	Ensure that none of the following conditions exist: • A cooling fan has been removed or has failed. • System cover, cooling shroud, EMI filler panel, memory module blank, or back filler bracket is removed. • Ambient temperature is too high. • External airflow is obstructed. See the Getting help section.
	Memory indicator	The indicator flashes amber if a memory error occurs.	Check the system event log or system messages for the location of the failed memory. Reseat the memory module. If the problem persists, see the Getting help section.

Hard drive indicator codes

Each hard drive carrier has an activity indicator and a status indicator. The indicators provide information about the current status of the hard drive. The activity LED indicates whether hard drive is currently in use or not. The status LED indicates the power condition of the hard drive.

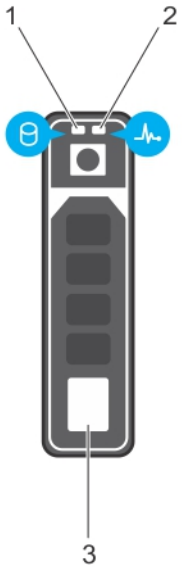

Figure 5. Hard drive indicators

1. hard drive activity indicator
2. hard drive status indicator
3. hard drive

NOTE: If the hard drive is in the Advanced Host Controller Interface (AHCI) mode, the status indicator (on the right side) does not turn on.

Table 5. Hard drive indicator codes

Drive-status indicator pattern (RAID only)	Condition
Flashes green twice per second	Identifying drive or preparing for removal.
Off	Drive ready for insertion or removal. **NOTE: The drive status indicator remains off until all hard drives are initialized after the system is turned on. Drives are not ready for insertion or removal during this time.**
Flashes green, amber, and then turns off	Predicted drive failure
Flashes amber four times per second	Drive failed
Flashes green slowly	Drive rebuilding
Steady green	Drive online
Flashes green for three seconds, amber for three seconds, and then turns off after six seconds	Rebuild stopped

NIC indicator codes

Each NIC on the back panel has an indicator that provides information about the network activity and link status. The activity LED indicates whether the NIC is currently connected or not. The link LED indicates the speed of the connected network.

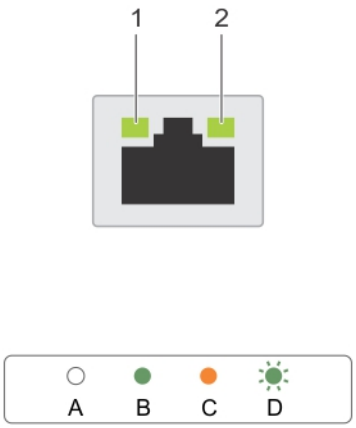

Figure 6. NIC indicators

1. link indicator
2. activity indicator

Table 6. NIC indicators

Convention	Status	Condition
A	Link and activity indicators are off	The NIC is not connected to the network.
B	Link indicator is green	The NIC is connected to a valid network at its maximum port speed (1 Gbps or 10 Gbps).
C	Link indicator is amber	The NIC is connected to a valid network at less than its maximum port speed.
D	Activity indicator is flashing green	Network data is being sent or received.

Power supply unit indicator codes

AC power supply units (PSUs) have an illuminated translucent handle that serves as an indicator and DC PSUs have an LED that serves as an indicator. The indicator shows whether power is present or a power fault has occurred.

Figure 7. AC PSU status indicator

1. AC PSU status indicator/handle

Table 7. AC PSU status indicators

Convention	Power indicator pattern	Condition
A	Green	A valid power source is connected to the PSU and the PSU is operational.
B	Flashing green	When the firmware of the PSU is being updated, the PSU handle flashes green.
C	Flashing green and turns off	When hot-adding a PSU, the PSU handle flashes green five times at 4 Hz rate and turns off. This indicates a PSU mismatch with respect to efficiency, feature set, health status, and supported voltage. **NOTE: Ensure that both the PSUs are of the same capacity.** **CAUTION: For AC PSUs, use only PSUs with the Extended Power Performance (EPP) label on the back.** **NOTE: Mixing PSUs from previous generations of Dell PowerEdge servers can result in a PSU mismatch condition or failure to turn the system on.**
D	Flashing amber	Indicates a problem with the PSU. **CAUTION: When correcting a PSU mismatch, replace only the PSU with the flashing indicator. Swapping the PSU to make a matched pair can result in an error condition and unexpected system shutdown. To change from a high output configuration to a low output configuration or vice versa, you must turn off the system.** **CAUTION: AC PSUs support both 220 V and 110 V input voltages with the exception of Titanium PSUs, which support only 220 V. When two identical PSUs receive different input voltages, they can output different wattages, and trigger a mismatch.** **CAUTION: If two PSUs are used, they must be of the same type and have the same maximum output power.** **CAUTION: Combining AC and DC PSUs is not supported and triggers a mismatch.**
E	Not lit	Power is not connected.

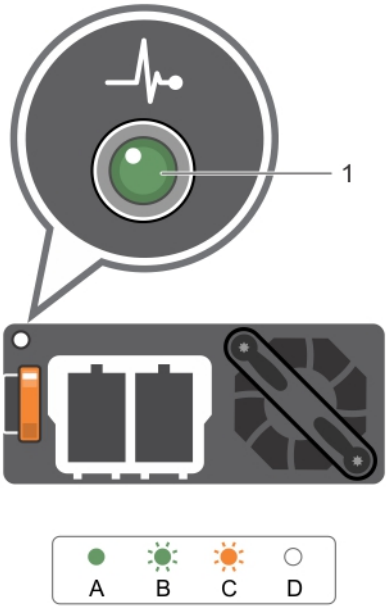

Figure 8. DC PSU status indicator

1. DC PSU status indicator

Table 8. DC PSU status indicators

Convention	Power indicator pattern	Condition
A	Green	A valid power source is connected to the PSU and that the PSU is operational.
B	Flashing green	When hot-adding a PSU, the PSU indicator flashes green. This indicates that there is a PSU mismatch with respect to efficiency, feature set, health status, and supported voltage. Ensure that both the PSUs are of the same capacity.
C	Flashing amber	Indicates a problem with the PSU. **CAUTION: When correcting a PSU mismatch, replace only the PSU with the flashing indicator. Swapping the PSU to make a matched pair can result in an error condition and unexpected system shutdown. To change from a High Output configuration to a Low Output configuration or vice versa, you must turn off the system.** **CAUTION: AC PSU support both 220 V and 110 V input voltages with the exception of Titanium PSU, which support only 220 V. When two identical PSU receive different input voltages, they can output different wattages, and trigger a mismatch.** **CAUTION: If two PSU are used, they must be of the same type and have the same maximum output power.** **CAUTION: Combining AC and DC PSU is not supported and triggers a mismatch.**
D	Not lit	Power is not connected.

iDRAC Direct LED indicator codes

The iDRAC Direct LED indicator lights up to indicate that the port is connected and is being used as a part of the iDRAC subsystem.

NOTE: The iDRAC Direct LED indicator does not turn on when the USB port is used in the USB mode.

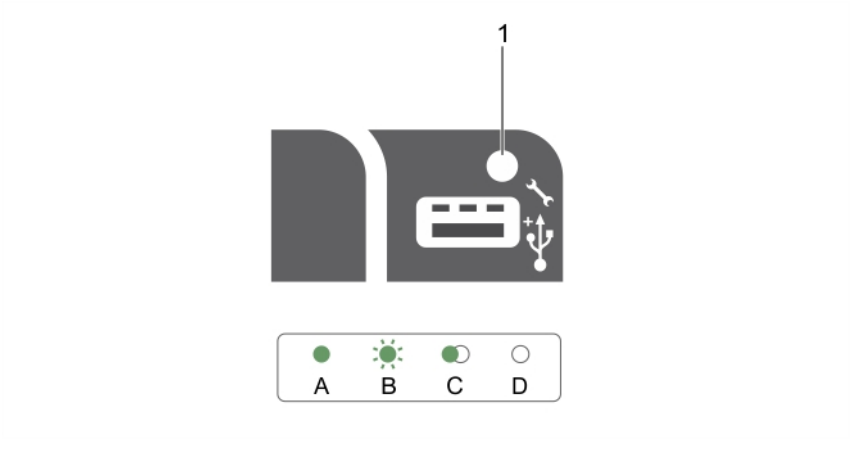

1. iDRAC Direct status indicator

The iDRAC Direct LED indicator table describes iDRAC Direct activity when configuring iDRAC Direct by using the management port (USB XML Import).

Table 9. iDRAC Direct LED indicators

Convention	iDRAC Direct LED indicator pattern	Condition
A	Green	Turns green for a minimum of two seconds to indicate the start and end of a file transfer.
B	Flashing green	Indicates file transfer or any operation tasks.
C	Green and turns off	Indicates that the file transfer is complete.
D	Not lit	Indicates that the USB is ready to be removed or that a task is complete.

The following table describes iDRAC Direct activity when configuring iDRAC Direct by using your laptop and cable (Laptop Connect):

Table 10. iDRAC Direct LED indicator patterns

iDRAC Direct LED indicator pattern	Condition
Solid green for two seconds	Indicates that the laptop is connected.
Flashing green (on for two seconds and off for two seconds)	Indicates that the laptop connected is recognized.
Turns off	Indicates that the laptop is unplugged.

Internal dual SD module indicator codes

The Internal Dual SD module (IDSDM) provides you with a redundant SD card solution. You can configure the IDSDM for storage or as the OS boot partition. The IDSDM card offers the following features:

- Dual card operation — maintains a mirrored configuration by using SD cards in both the slots and provides redundancy.

  NOTE: When the Redundancy option is set to Mirror Mode in the Integrated Devices screen of System Setup, the information is replicated from one SD card to another.
- Single card operation — single card operation is supported, but without redundancy.

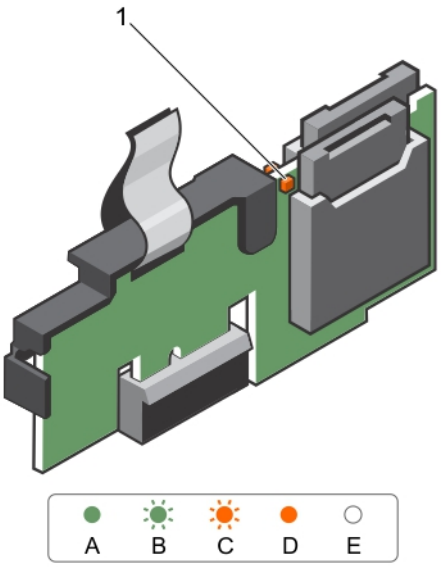

Figure 9. Internal dual SD module (IDSDM)

1. LED status indicator (2)

The following table describes the IDSDM indicator codes:

Table 11. IDSDM indicator codes

Convention	IDSDM indicator code	Description
A	Green	Indicates that the card is online.
B	Flashing green	Indicates rebuild or activity.
C	Flashing amber	Indicates card mismatch or that the card has failed.
D	Amber	Indicates that the card is offline, has failed, or is write-protected.
E	Not lit	Indicates that the card is missing or is booting.

Locating Service Tag of your system

Your system is identified by a unique Express Service Code and Service Tag number. The Express Service Code and Service Tag are found on the front of the system by pulling out the information tag. Alternatively, the information may be on a sticker on the chassis of the system. This information is used by Dell to route support calls to the appropriate personnel.

2

Documentation resources

This section provides information about the documentation resources for your system.

Table 12. Documentation resources for system

Task	Document	Location
Setting up your system	For information about installing the system into a rack, see the Rack documentation included with your rack solution.	Dell.com/poweredgemanuals
	For information about turning on the system and the technical specifications of your system, see the *Getting Started With Your System* document that is shipped with your system.	Dell.com/poweredgemanuals
Configuring your system	For information about iDRAC features, configuring and logging in to iDRAC, and managing your system remotely, see the Integrated Dell Remote Access Controller User's Guide.	Dell.com/idracmanuals
	For information about installing the operating system, see the operating system documentation.	Dell.com/operatingsystemmanuals
	For information about understanding Remote Access Controller Admin (RACADM) subcommands and supported RACADM interfaces, see the RACADM Command Line Reference Guide for iDRAC.	Dell.com/idracmanuals
	For information about updating drivers and firmware, see theMethods to download firmware and drivers section in this document.	Dell.com/support/drivers
Managing your system	For information about the features of the Dell OpenManage Systems Management, see the Dell OpenManage Systems Management Overview Guide.	Dell.com/openmanagemanuals
	For information about setting up, using, and troubleshooting OpenManage, see the Dell OpenManage Server Administrator User's Guide.	Dell.com/openmanagemanuals
	For information about installing, using, and troubleshooting Dell OpenManage Essentials, see the Dell OpenManage Essentials User's Guide.	Dell.com/openmanagemanuals
	For information about installing and using Dell System E-Support Tool (DSET), see the Dell System E-Support Tool (DSET) User's Guide.	Dell.com/DSET
	For information about installing and using Active System Manager (ASM), see the Active System Manager User's Guide.	Dell.com/asmdocs
	For understanding the features of Dell Lifecycle Controller (LCC), see the Dell Lifecycle Controller User's Guide.	Dell.com/idracmanuals
	For information about partner programs enterprise systems management, see the OpenManage Connections Enterprise Systems Management documents.	Dell.com/omconnectionsenterprisesystemsmanagement

Task	Document	Location
	For information about connections and client systems management, see the OpenManage Connections Client Systems Management documentation.	Dell.com/dellclientcommandsuitemanuals
	For information about viewing inventory, performing configuration and monitoring tasks, remotely turning on or off servers, and enabling alerts for events on servers and components using the Dell Chassis Management Controller (CMC), see the CMC User's Guide.	Dell.com/esmmanuals
Working with Dell PowerEdge RAID controllers	For information about understanding the features of the Dell PowerEdge RAID controllers (PERC) and deploying the PERC cards, see the Storage controller documentation.	Dell.com/storagecontrollermanuals
Understanding event and error messages	For information about checking the event and error messages generated by the system firmware and agents that monitor system components, see the Dell Event and Error Messages Reference Guide.	Dell.com/openmanagemanuals > OpenManage software

3

Technical specifications

Chassis dimensions

This section describes the physical dimensions of the system.

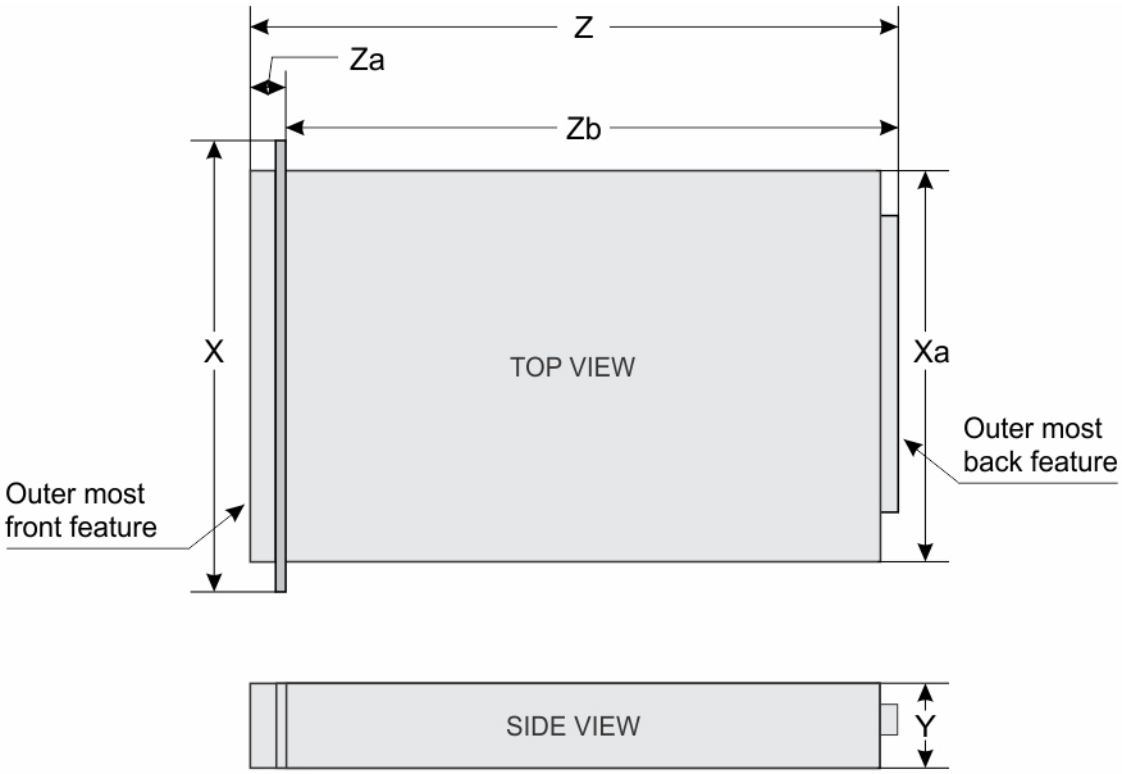

Figure 10. Chassis dimensions of the PowerEdge R530 system

Table 13. Dimensions of the Dell PowerEdge R530 system

X	Xa	Y	Z	Za with bezel	Za without bezel	Zb
482.4 mm	434 mm	86.8 mm	668.715 mm (Cabled PSU) 682.298 mm (RON PSU)	35.6 mm	20.1	633.115 mm (Cabled PSU) 646.698 mm (RON PSU)

Chassis weight

Table 14. Chassis weight

System	Maximum weight
PowerEdge R530	28.2 kg (62 lbs)

Processor specifications

The PowerEdge R530 system supports up to two Intel Xeon E5-2600 v3 or E5-2600 v4 product family processors.

Power supply unit specifications

The PowerEdge R530 system supports up to two AC or DC redundant power supply units (PSUs) or one non-redundant PSU.

Table 15. PSU specifications

PSU	Class	Heat dissipation (maximum)	Frequency	Voltage
450 W AC (cabled)	Bronze	1871 BTU/hr	50/60 Hz	100–240 V AC, autoranging
495 W AC	Platinum	1908 BTU/hr	50/60 Hz	100–240 V AC, autoranging
750 W AC	Platinum	2891 BTU/hr	50/60 Hz	100–240 V AC, autoranging
1100 W AC	Platinum	4100 BTU/hr	50/60 Hz	100–240 V AC, autoranging
750 W DC (for China only)	Platinum	2902 BTU/hr		240 V DC

NOTE: Heat dissipation is calculated using the PSU wattage rating.

NOTE: This system is also designed to connect to the IT power systems with a phase to phase voltage not exceeding 230 V.

System battery specifications

The PowerEdge R530 system supports CR 2032 3.0-V lithium coin cell system battery.

Expansion bus specifications

The PowerEdge R530 system supports PCI Express Generation 2 and PCI Express Generation 3 expansion slots with an optional riser card. The following table provides the expansion card riser specifications:

Table 16. Expansion card riser specifications

Expansion card riser	PCIe slots on the riser	Height	Length	Link
Riser 1 (Plug in Slot 2)	Slot 1	full-height	full-length	x16
	Slot 2	full-height	half -length	x8
	Slot 3	low-profile	half -length	x16
	Slot 4	low-profile	half -length	x1
	Slot 5	low-profile	half -length	x4
Expansion slot on the system board	Slot 1	low-profile	half -length	x8
	Slot 2	low-profile	half -length	x16
	Slot 3	low-profile	half -length	x16
	Slot 4	low-profile	half -length	x1
	Slot 5	low-profile	half -length	x4

Memory specifications

The PowerEdge R530 system supports DDR4 registered DIMMs (RDIMMs). Supported memory bus frequencies are 1866 MT/s, 2133MT/s, or 2400 MT/s.

Table 17. Memory specifications

Memory module sockets	Memory capacity	Minimum RAM	Maximum RAM
Twelve 288–pin	• 4 GB single rank (RDIMMs) • 8 GB, 16 GB, or 32 GB dual rank (RDIMMs)	• 4 GB with single processor • 8 GB with dual processors (minimum one memory module per processor)	• Up to 256 GB with a single processor • Up to 384 GB with a dual processor

Drive specifications

Hard drives

The PowerEdge R530 system supports:

- Up to eight 3.5-inch or 2.5-inch, internal, hot-swappable SAS, SATA, or Nearline SAS hard drives or up to eight 3.5-inch or 2.5-inch, internal, hot-swappable SATA SSDs

Optical drive

The PowerEdge R530 system supports one optional SATA DVD-ROM drive or DVD+/-RW drive.

Ports and connectors specifications

USB ports

The PowerEdge R530 system supports:

- USB 2.0-compliant ports on the front panel
- USB 3.0-complaint and USB 2.0-compliant ports on the back panel
- internal USB 3.0-compliant port

The following table provides more information about the USB specifications:

Table 18. USB specifications

System	Front panel	Back panel	Internal
PowerEdge R530	• One 4-pin, USB 2.0-compliant port • One USB management port/ iDRAC Direct	Two USB ports, 1 USB 3.0-compliant port and 1 USB 2.0–compliant port	One 9-pin, USB 3.0-compliant port

NIC ports

The PowerEdge R530 system supports four 10/100/1000 Gbps Network Interface Controller (NIC) ports on the back panel.

Serial connector

The serial connector connects a serial device to the system. The PowerEdge R530 system supports one serial connector on the back panel, which is a 9-pin connector, Data Terminal Equipment (DTE), 16550-compliant.

VGA ports

The Video Graphic Array (VGA) port enables you to connect the system to a VGA display. The PowerEdge R530 system supports two 15-pin VGA ports on the front and back panels.

Internal Dual SD Module

The PowerEdge R530 system supports two optional flash memory card slots with an internal dual SD module.

NOTE: One card slot is dedicated for redundancy.

Video specifications

The PowerEdge R530 system supports Matrox G200eR2 graphics card with 16 MB capacity.

Table 19. Supported video resolution options

Resolution	Refresh rate (Hz)	Color depth (bits)
640x480	60,70	8, 16, 32
800x600	60,75, 85	8, 16, 32
1024x768	60,75, 85	8, 16, 32
1152x864	60,75, 85	8, 16, 32
1280x1024	60,75	8, 16, 32
1440x900	60	8, 16, 32

Environmental specifications

NOTE: For additional information about environmental measurements for specific system configurations, see Dell.com/environmental_datasheets.

Table 20. Temperature specifications

Temperature	Specifications
Storage	–40°C to 65°C (–40°F to 149°F)
Continuous operation (for altitude less than 950 m or 3117 ft)	10°C to 35°C (50°F to 95°F) with no direct sunlight on the equipment.
Fresh air	For information about fresh air, see Expanded Operating Temperature section.
Maximum temperature gradient (operating and storage)	20°C/h (68°F/h)

Table 21. Relative humidity specifications

Relative humidity	Specifications
Storage	5% to 95% RH with 33°C (91°F) maximum dew point. Atmosphere must be non-condensing at all times.
Operating	10% to 80% relative humidity with 29°C (84.2°F) maximum dew point.

Table 22. Maximum vibration specifications

Maximum vibration	Specifications
Operating	0.26 G_{rms} at 5 Hz to 350 Hz (all operation orientations).
Storage	1.88 G_{rms} at 10 Hz to 500 Hz for 15 min (all six sides tested).

Table 23. Maximum shock specifications

Maximum vibration	Specifications
Operating	Six consecutively executed shock pulses in the positive and negative x, y, and z axes of 40 G for up to 2.3 ms.
Storage	Six consecutively executed shock pulses in the positive and negative x, y, and z axes (one pulse on each side of the system) of 71 G for up to 2 ms.

Table 24. Maximum altitude specifications

Maximum altitude	Specifications
Operating	30482000 m (10,0006560 ft)
Storage	12,000 m (39,370 ft)

Table 25. Operating temperature de-rating specifications

Operating temperature de-rating	Specifications
Up to 35°C (95°F)	Maximum temperature is reduced by 1°C/300 m (1°F/547 ft) above 950 m (3,117 ft).
35°C to 40°C (95°F to 104°F)	Maximum temperature is reduced by 1°C/175 m (1°F/319 ft) above 950 m (3,117 ft).
40°C to 45°C (104°F to 113°F)	Maximum temperature is reduced by 1°C/125 m (1°F/228 ft) above 950 m (3,117 ft).

Particulate and gaseous contamination specifications

The following table defines the limitations that help avoid any equipment damage or failure from particulates and gaseous contamination. If the levels of particulates or gaseous pollution exceed the specified limitations and result in equipment damage or failure, you may need to rectify the environmental conditions. Re-mediation of environmental conditions is the responsibility of the customer.

Table 26. Particulate contamination specifications

Particulate contamination	Specifications
Air filtration	Data center air filtration as defined by ISO Class 8 per ISO 14644-1 with a 95% upper confidence limit. **NOTE: This condition applies to data center environments only. Air filtration requirements do not apply to IT equipment designed to be used outside a data center, in environments such as an office or factory floor.** **NOTE: Air entering the data center must have MERV11 or MERV13 filtration.**
Conductive dust	Air must be free of conductive dust, zinc whiskers, or other conductive particles. **NOTE: This condition applies to data center and non-data center environments.**
Corrosive dust	• Air must be free of corrosive dust. • Residual dust present in the air must have a deliquescent point less than 60% relative humidity. **NOTE: This condition applies to data center and non-data center environments.**

Table 27. Gaseous contamination specifications

Gaseous contamination	Specifications
Copper coupon corrosion rate	<300 Å/month per Class G1 as defined by ANSI/ISA71.04-1985.

Gaseous contamination	Specifications
Silver coupon corrosion rate	<200 Å/month as defined by AHSRAE TC9.9.

NOTE: Maximum corrosive contaminant levels measured at ≤50% relative humidity.

Standard operating temperature

Table 28. Standard operating temperature specifications

Standard operating temperature	Specifications
Continuous operation (for altitude less than 950 m or 3117 ft)	10°C to 35°C (50°F to 95°F) with no direct sunlight on the equipment.

Expanded operating temperature

Table 29. Expanded operating temperature specifications

Expanded operating temperature	Specifications
Continuous operation	5°C to 40°C at 5% to 85% RH with 29°C dew point. **NOTE: Outside the standard operating temperature (10°C to 35°C), the system can operate continuously in temperatures as low as 5°C and as high as 40°C.** For temperatures between 35°C and 40°C, de-rate maximum allowable temperature by 1°C per 175 m above 950 m (1°F per 319 ft).
≤ 1% of annual operating hours	–5°C to 45°C at 5% to 90% RH with 29°C dew point. **NOTE: Outside the standard operating temperature (10°C to 35°C), the system can operate down to –5°C or up to 45°C for a maximum of 1% of its annual operating hours.** For temperatures between 40°C and 45°C, de-rate maximum allowable temperature by 1°C per 125 m above 950 m (1°F per 228 ft).

NOTE: When operating in the expanded temperature range, system performance may be impacted.

NOTE: When operating in the expanded temperature range, ambient temperature warnings maybe reported on the LCD panel and in the System Event Log.

Expanded operating temperature restrictions

- Do not perform a cold startup below 5°C.
- The operating temperature specified is for a maximum altitude of 3050 m (10,000 ft).
- Only support TDP to 120W
- Tape Backup Unit (TBU) is not supported in Fresh Air.
- Redundant power supplies are required.
- Non Dell qualified peripheral cards and/or peripheral cards greater than 25 W are not supported.
- PCIe SSD is not supported.

4

Initial system setup and configuration

Setting up your system

Complete the following steps to set up your system:

Steps

1. Unpack the system.
2. Install the system into the rack. For more information about installing the system into the rack, see your system *Rack Installation Placemat* at **Dell.com/poweredgemanuals**.
3. Connect the peripherals to the system.
4. Connect the system to its electrical outlet.
5. Turn the system on by pressing the power button or by using iDRAC.
6. Turn on the attached peripherals.

iDRAC configuration

The Integrated Dell Remote Access Controller (iDRAC) is designed to make system administrators more productive and improve the overall availability of Dell systems. iDRAC alerts administrators to system issues, helps them perform remote system management, and reduces the need for physical access to the system.

Options to set up iDRAC IP address

You must configure the initial network settings based on your network infrastructure to enable the communication to and from iDRAC. You can set up the IP address by using one of the following interfaces:

Interfaces	Document/Section
iDRAC Settings utility	See *Dell Integrated Dell Remote Access Controller User's Guide* at **Dell.com/idracmanuals**
Dell Deployment Toolkit	See *Dell Deployment Toolkit User's Guide* at **Dell.com/openmanagemanuals**
Dell Lifecycle Controller	See *Dell Lifecycle Controller User's Guide* at **Dell.com/idracmanuals**
Chassis or Server LCD panel	See the LCD panel section

You must use the default iDRAC IP address 192.168.0.120 to configure the initial network settings, including setting up DHCP or a static IP for iDRAC.

NOTE: To access iDRAC, ensure that you install the iDRAC port card or connect the network cable to the Ethernet connector 1 on the system board.

NOTE: Ensure that you change the default user name and password after setting up the iDRAC IP address.

Log in to iDRAC

You can log in to iDRAC as:

- iDRAC user
- Microsoft Active Directory user
- Lightweight Directory Access Protocol (LDAP) user

The default user name and password are `root` and `calvin`. You can also log in by using Single Sign-On or Smart Card.

NOTE: You must have iDRAC credentials to log in to iDRAC.

For more information about logging in to iDRAC and iDRAC licenses, see the *Integrated Dell Remote Access Controller User's Guide* at **Dell.com/idracmanuals**.

Options to install the operating system

If the system is shipped without an operating system, install the supported operating system by using one of the following resources:

Table 30. Resources to install the operating system

Resources	Location
Dell Systems Management Tools and Documentation media	Dell.com/operatingsystemmanuals
Dell Lifecycle Controller	Dell.com/idracmanuals
Dell OpenManage Deployment Toolkit	Dell.com/openmanagemanuals
Dell certified VMware ESXi	Dell.com/virtualizationsolutions
Supported operating systems on Dell PowerEdge systems	Dell.com/ossupport
Installation and How-to videos for supported operating systems on Dell PowerEdge systems	Supported Operating Systems for Dell PowerEdge Systems

Methods to download firmware and drivers

You can download the firmware and drivers by using any of the following methods:

Table 31. Firmware and drivers

Methods	Location
From the Dell Support site	Dell.com/support/home
Using Dell Remote Access Controller Lifecycle Controller (iDRAC with LC)	Dell.com/idracmanuals
Using Dell Repository Manager (DRM)	Dell.com/openmanagemanuals
Using Dell OpenManage Essentials (OME)	Dell.com/openmanagemanuals
Using Dell Server Update Utility (SUU)	Dell.com/openmanagemanuals
Using Dell OpenManage Deployment Toolkit (DTK)	Dell.com/openmanagemanuals

Downloading the drivers and firmware

Dell recommends that you download and install the latest BIOS, drivers, and systems management firmware on your system.

Prerequisites

Ensure that you clear the web browser cache before downloading the drivers and firmware.

Steps

1. Go to **Dell.com/support/drivers**.
2. Under the **Drivers & Downloads** section, type the Service Tag of your system in the **Service Tag or Express Service Code** box.

   NOTE: If you do not have the Service Tag, select Detect My Product to allow the system to automatically detect your Service Tag, or under General support, navigate to your product.
3. Click **Drivers & Downloads**.
   The drivers that are applicable to your selection are displayed.
4. Download the drivers you need to a USB drive, CD, or DVD.

5

Pre-operating system management applications

Options to manage the pre-operating system applications

Your system has the following options to manage the pre-operating system applications:

- System Setup
- Boot Manager
- Dell Lifecycle Controller
- Preboot Execution Environment (PXE)

Related concepts

System Setup
Boot Manager
Dell Lifecycle Controller
PXE boot

System Setup

By using the **System Setup** screen, you can configure the BIOS settings, iDRAC settings, and device settings of your system.

NOTE: Help text for the selected field is displayed in the graphical browser by default. To view the help text in the text browser, press F1.

You can access system setup by using two methods:

- Standard graphical browser — The browser is enabled by default.
- Text browser — The browser is enabled by using Console Redirection.

Related tasks

Viewing System Setup

Related reference

System Setup details

Viewing System Setup

To view the **System Setup** screen, perform the following steps:

Steps

1. Turn on, or restart your system.
2. Press F2 immediately after you see the following message:

```
F2 = System Setup
```

NOTE: If your operating system begins to load before you press F2, wait for the system to finish booting, and then restart your system and try again.

Related concepts

System Setup

Related reference

System Setup details
System BIOS
iDRAC Settings utility
Device Settings

System Setup details

The **System Setup Main Menu** screen details are explained as follows:

Option	Description
System BIOS	Enables you to configure BIOS settings.
iDRAC Settings	Enables you to configure iDRAC settings. The iDRAC settings utility is an interface to set up and configure the iDRAC parameters by using UEFI (Unified Extensible Firmware Interface). You can enable or disable various iDRAC parameters by using the iDRAC settings utility. For more information about this utility, see *Integrated Dell Remote Access Controller User's Guide* at **Dell.com/idracmanuals**.
Device Settings	Enables you to configure device settings.

Related concepts

System Setup

Related tasks

Viewing System Setup

System BIOS

You can use the **System BIOS** screen to edit specific functions such as boot order, system password, setup password, set the RAID mode, and enable or disable USB ports.

Related tasks

Viewing System BIOS

Related reference

System BIOS Settings details
Boot Settings
Network Settings
System Security
System Information
Memory Settings
Processor Settings
SATA Settings
Integrated Devices
Serial Communication
System Profile Settings
Miscellaneous Settings
iDRAC Settings utility
Device Settings

Viewing System BIOS

To view the **System BIOS** screen, perform the following steps:

Steps

1. Turn on, or restart your system.
2. Press F2 immediately after you see the following message:

```
F2 = System Setup
```

> **NOTE: If your operating system begins to load before you press F2, wait for the system to finish booting, and then restart your system and try again.**

3. On the **System Setup Main Menu** screen, click **System BIOS**.

Related reference

System BIOS
System BIOS Settings details

System BIOS Settings details

About this task

The **System BIOS Settings** screen details are explained as follows:

Option	Description
System Information	Specifies information about the system such as the system model name, BIOS version, and Service Tag.
Memory Settings	Specifies information and options related to the installed memory.
Processor Settings	Specifies information and options related to the processor such as speed and cache size.
SATA Settings	Specifies options to enable or disable the integrated SATA controller and ports.
Boot Settings	Specifies options to specify the boot mode (BIOS or UEFI). Enables you to modify UEFI and BIOS boot settings.
Network Settings	Specifies options to change the network settings.
Integrated Devices	Specifies options to manage integrated device controllers and ports and specify related features and options.
Serial Communication	Specifies options to manage the serial ports and specify related features and options.
System Profile Settings	Specifies options to change the processor power management settings, memory frequency, and so on.
System Security	Specifies options to configure the system security settings, such as system password, setup password, Trusted Platform Module (TPM) security. It also manages the power and NMI buttons on the system.
Miscellaneous Settings	Specifies options to change the system date, time, and so on.

Related tasks

Viewing System BIOS

Related reference

System BIOS

Boot Settings

You can use the **Boot Settings** screen to set the boot mode to either **BIOS** or **UEFI**. It also enables you to specify the boot order.

Related tasks

Boot Settings details
Viewing Boot Settings
Changing the boot order

Related reference

System BIOS
Choosing the system boot mode

Viewing Boot Settings

To view the **Boot Settings** screen, perform the following steps:

Steps

1. Turn on, or restart your system.
2. Press F2 immediately after you see the following message:

```
F2 = System Setup
```

   NOTE: If your operating system begins to load before you press F2, wait for the system to finish booting, and then restart your system and try again.

3. On the **System Setup Main Menu** screen, click **System BIOS**.
4. On the **System BIOS** screen, click **Boot Settings**.

Related tasks

Boot Settings details
Changing the boot order

Related reference

Boot Settings
Choosing the system boot mode

Boot Settings details

About this task

The **Boot Settings** screen details are explained as follows:

Option	Description
Boot Mode	Enables you to set the boot mode of the system. **CAUTION: Switching the boot mode may prevent the system from booting if the operating system is not installed in the same boot mode.** If the operating system supports UEFI, you can set this option to **UEFI**. Setting this field to **BIOS** allows compatibility with non-UEFI operating systems. This option is set to **BIOS** by default. **NOTE: Setting this field to UEFI disables the BIOS Boot Settings menu. Setting this field to BIOS disables the UEFI Boot Settings menu.**
Boot Sequence Retry	Enables or disables the Boot Sequence Retry feature. If this option is set to **Enabled** and the system fails to boot, the system reattempts the boot sequence after 30 seconds. This option is set to **Enabled** by default.
Hard-Disk Failover	Specifies the hard drive that is booted in the event of a hard drive failure. The devices are selected in the **Hard-Disk Drive Sequence** on the **Boot Option Setting** menu. When this option is set to **Disabled**, only the first

Option	Description
	hard drive in the list is attempted to boot. When this option is set to **Enabled**, all hard drives are attempted to boot in the order selected in the **Hard-Disk Drive Sequence**. This option is not enabled for UEFI Boot Mode.
Boot Option Settings	Configures the boot sequence and the boot devices.

Related tasks

Viewing Boot Settings
Changing the boot order

Related reference

Boot Settings
Choosing the system boot mode

Choosing the system boot mode

System Setup enables you to specify one of the following boot modes for installing your operating system:

- BIOS boot mode (the default) is the standard BIOS-level boot interface.
- Unified Extensible Firmware Interface (UEFI) boot mode is an enhanced 64-bit boot interface. If you have configured your system to boot to UEFI mode, it replaces the system BIOS.

1. From the **System Setup Main Menu**, click **Boot Settings**, and select **Boot Mode**.
2. Select the boot mode you want the system to boot into.

   CAUTION: Switching the boot mode may prevent the system from booting if the operating system is not installed in the same boot mode.
3. After the system boots in the specified boot mode, proceed to install your operating system from that mode.

NOTE: Operating systems must be UEFI-compatible to be installed from the UEFI boot mode. DOS and 32-bit operating systems do not support UEFI and can only be installed from the BIOS boot mode.

NOTE: For the latest information about supported operating systems, go to Dell.com/ossupport.

Related tasks

Boot Settings details
Viewing Boot Settings

Related reference

Boot Settings

Changing the boot order

You may have to change the boot order if you want to boot from a USB key or an optical drive. The following instructions may vary if you have selected **BIOS** for **Boot Mode**.

Steps

1. On the **System Setup Main Menu** screen, click **System BIOS** > **Boot Settings**.
2. Click **Boot Option Settings** > **Boot Sequence**.
3. Use the arrow keys to select a boot device, and use the plus (+) and minus (-) sign keys to move the device down or up in the order.
4. Click **Exit**, and then click **Yes** to save the settings on exit.

Related tasks

Boot Settings details
Viewing Boot Settings

Related reference

Boot Settings

Network Settings

You can use the **Network Settings** screen to modify PXE device settings. The network settings option is available only in the UEFI mode.

NOTE: The BIOS does not control network settings in the BIOS mode. For the BIOS boot mode, the optional Boot ROM of the network controllers handles the network settings.

Related tasks

Viewing Network Settings

Related reference

Network Settings screen details
System BIOS

Viewing Network Settings

To view the **Network Settings** screen, perform the following steps:

Steps

1. Turn on, or restart your system.
2. Press F2 immediately after you see the following message:

```
F2 = System Setup
```

NOTE: If your operating system begins to load before you press F2, wait for the system to finish booting, and then restart your system and try again.

3. On the **System Setup Main Menu** screen, click **System BIOS**.
4. On the **System BIOS** screen, click **Network Settings**.

Related reference

Network Settings
Network Settings screen details

Network Settings screen details

The **Network Settings** screen details are explained as follows:

About this task

Option	Description
PXE Device n (n = 1 to 4)	Enables or disables the device. When enabled, a UEFI boot option is created for the device.
PXE Device n Settings(n = 1 to 4)	Enables you to control the configuration of the PXE device.

Related tasks

Viewing Network Settings

Related reference

Network Settings

UEFI iSCSI Settings

You can use the iSCSI Settings screen to modify iSCSI device settings. The iSCSI Settings option is available only in the UEFI boot mode. BIOS does not control network settings in the BIOS boot mode. For the BIOS boot mode, the option ROM of the network controller handles the network settings.

Viewing UEFI iSCSI Settings

To view the **UEFI iSCSI Settings** screen, perform the following steps:

Steps

1. Turn on, or restart your system.
2. Press F2 immediately after you see the following message:

```
F2 = System Setup
```

NOTE: If your operating system begins to load before you press F2, wait for the system to finish booting, and then restart your system and try again.

3. On the **System Setup Main Menu** screen, click **System BIOS**.
4. On the **System BIOS** screen, click **Network Settings**.
5. On the **Network Settings** screen, click **UEFI iSCSI Settings**.

UEFI iSCSI Settings details

The **UEFI ISCSI Settings** screen details are explained as follows:

Option	Description
ISCSI Initiator Name	Specifies the name of the iSCSI initiator (iqn format).
ISCSI Device n (n = 1 to 4)	Enables or disables the iSCSI device. When disabled, a UEFI boot option is created for the iSCSI device automatically.

System Security

You can use the **System Security** screen to perform specific functions such as setting the system password, setup password and disabling the power button.

Related tasks

System Security Settings details
Viewing System Security
Creating a system and setup password
Using your system password to secure your system
Deleting or changing system and setup password

Related reference

Operating with a setup password enabled
System BIOS

Viewing System Security

To view the **System Security** screen, perform the following steps:

Steps

1. Turn on, or restart your system.
2. Press F2 immediately after you see the following message:

```
F2 = System Setup
```

NOTE: If your operating system begins to load before you press F2, wait for the system to finish booting, and then restart your system and try again.

3. On the **System Setup Main Menu** screen, click **System BIOS**.
4. On the **System BIOS** screen, click **System Security**.

Related tasks

System Security Settings details

Related reference

System Security

System Security Settings details

About this task

The **System Security Settings** screen details are explained as follows:

Option	Description
Intel AES-NI	Improves the speed of applications by performing encryption and decryption by using the Advanced Encryption Standard Instruction Set (AES-NI). This option is set to **Enabled** by default.
System Password	Sets the system password. This option is set to **Enabled** by default and is read-only if the password jumper is not installed in the system.
Setup Password	Sets the setup password. This option is read-only if the password jumper is not installed in the system.
Password Status	Locks the system password. This option is set to **Unlocked** by default.
TPM Security	**NOTE: The TPM menu is available only when the TPM module is installed.** Enables you to control the reporting mode of the TPM. The **TPM Security** option is set to **Off** by default. You can only modify the TPM Status, TPM Activation, and Intel TXT fields if the **TPM Status** field is set to either **On with Pre-boot Measurements** or **On without Pre-boot Measurements**.
TPM Information	Changes the operational state of the TPM. This option is set to **No Change** by default.
TPM Status	Specifies the TPM status.
TPM Command	**CAUTION: Clearing the TPM results in the loss of all keys in the TPM. The loss of TPM keys may affect booting to the operating system.** Clears all the contents of the TPM. The **TPM Clear** option is set to **No** by default.
Intel TXT	Enables or disables the Intel Trusted Execution Technology (TXT) option. To enable the **Intel TXT** option, virtualization technology and TPM Security must be enabled with Pre-boot measurements. This option is set to **Off** by default.
Power Button	Enables or disables the power button on the front of the system. This option is set to **Enabled** by default.
NMI Button	Enables or disables the NMI button on the front of the system. This option is set to **Disabled** by default.
AC Power Recovery	Sets how the system behaves after AC power is restored to the system. This option is set to **Last** by default.
AC Power Recovery Delay	Sets the time delay for the system to power up after AC power is restored to the system. This option is set to **Immediate** by default.
User Defined Delay (60s to 240s)	Sets the **User Defined Delay** option when the **User Defined** option for **AC Power Recovery Delay** is selected.
UEFI Variable Access	Provides varying degrees of securing UEFI variables. When set to **Standard** (the default), UEFI variables are accessible in the operating system per the UEFI specification. When set to **Controlled**, selected UEFI variables are protected in the environment and new UEFI boot entries are forced to be at the end of the current boot order.
Secure Boot	Enables Secure Boot, where the BIOS authenticates each pre-boot image by using the certificates in the Secure Boot Policy. Secure Boot is disabled by default.

Option	Description
Secure Boot Policy	When Secure Boot policy is set to **Standard**, the BIOS uses the system manufacturer's key and certificates to authenticate pre-boot images. When Secure Boot policy is set to **Custom**, the BIOS uses the user-defined key and certificates. Secure Boot policy is set to **Standard** by default.
Secure Boot Policy Summary	Specifies the list of certificates and hashes that secure boot uses to authenticate images.

Related tasks

Viewing System Security

Related reference

System Security

Creating a system and setup password

Prerequisites

Ensure that the password jumper is enabled. The password jumper enables or disables the system password and setup password features. For more information, see the System board jumper settings section.

NOTE: If the password jumper setting is disabled, the existing system password and setup password are deleted and you need not provide the system password to boot the system.

Steps

1. To enter System Setup, press F2 immediately after turning on or rebooting your system.
2. On the **System Setup Main Menu** screen, click **System BIOS** > **System Security**.
3. On the **System Security** screen, verify that **Password Status** is set to **Unlocked**.
4. In the **System Password** field, type your system password, and press Enter or Tab.

   Use the following guidelines to assign the system password:

   - A password can have up to 32 characters.
   - The password can contain the numbers 0 through 9.
   - Only the following special characters are allowed: space, ("), (+), (,), (-), (.), (/), (;), ([), (\), (]), (`).

   A message prompts you to reenter the system password.
5. Reenter the system password, and click **OK**.
6. In the **Setup Password** field, type your setup password and press Enter or Tab.
   A message prompts you to reenter the setup password.
7. Reenter the setup password, and click **OK**.
8. Press Esc to return to the System BIOS screen. Press Esc again.

   A message prompts you to save the changes.

   NOTE: Password protection does not take effect until the system reboots.

Related reference

System Security

Using your system password to secure your system

If you have assigned a setup password, the system accepts your setup password as an alternate system password.

Steps

1. Turn on or reboot your system.
2. Type the system password and press Enter.

Next steps

When **Password Status** is set to **Locked**, type the system password and press Enter when prompted at reboot.

NOTE: If an incorrect system password is typed, the system displays a message and prompts you to reenter your password. You have three attempts to type the correct password. After the third unsuccessful attempt, the system displays an error message that the system has stopped functioning and must be turned off. Even after you turn off and restart the system, the error message is displayed until the correct password is entered.

Related reference

System Security

Deleting or changing system and setup password

Prerequisites

NOTE: You cannot delete or change an existing system or setup password if the Password Status is set to Locked.

Steps

1. To enter System Setup, press F2 immediately after turning on or restarting your system.
2. On the **System Setup Main Menu** screen, click **System BIOS** > **System Security**.
3. On the **System Security** screen, ensure that **Password Status** is set to **Unlocked**.
4. In the **System Password** field, alter or delete the existing system password, and then press Enter or Tab.
5. In the **Setup Password** field, alter or delete the existing setup password, and then press Enter or Tab.

   If you change the system and setup password, a message prompts you to reenter the new password. If you delete the system and setup password, a message prompts you to confirm the deletion.
6. Press Esc to return to the **System BIOS** screen. Press Esc again, and a message prompts you to save the changes.

Related reference

System Security

Operating with a setup password enabled

If **Setup Password** is set to **Enabled**, type the correct setup password before modifying the system setup options.

If you do not type the correct password in three attempts, the system displays the following message:

```
Invalid Password! Number of unsuccessful password attempts: <x> System Halted! Must power
down.
```

Even after you turn off and restart the system, the error message is displayed until the correct password is typed. The following options are exceptions:

- If **System Password** is not set to **Enabled** and is not locked through the **Password Status** option, you can assign a system password. For more information, see the System Security Settings screen section.
- You cannot disable or change an existing system password.

NOTE: You can use the password status option with the setup password option to protect the system password from unauthorized changes.

Related reference

System Security

System Information

You can use the **System Information** screen to view system properties such as Service Tag, system model name, and the BIOS version.

Related tasks

Viewing System Information

Related reference

System Information details
System BIOS

Viewing System Information

To view the **System Information** screen, perform the following steps:

Steps

1. Turn on, or restart your system.
2. Press F2 immediately after you see the following message:

```
F2 = System Setup
```

> **NOTE: If your operating system begins to load before you press F2, wait for the system to finish booting, and then restart your system and try again.**

3. On the **System Setup Main Menu** screen, click **System BIOS**.
4. On the **System BIOS** screen, click **System Information**.

Related reference

System Information

System Information details

About this task

The **System Information** screen details are explained as follows:

Option	Description
System Model Name	Specifies the system model name.
System BIOS Version	Specifies the BIOS version installed on the system.
System Management Engine Version	Specifies the current version of the Management Engine firmware.
System Service Tag	Specifies the system Service Tag.
System Manufacturer	Specifies the name of the system manufacturer.
System Manufacturer Contact Information	Specifies the contact information of the system manufacturer.
System CPLD Version	Specifies the current version of the system complex programmable logic device (CPLD) firmware.
UEFI Compliance Version	Specifies the UEFI compliance level of the system firmware.

Related tasks

Viewing System Information

Related reference

System Information
System Information details

Memory Settings

You can use the **Memory Settings** screen to view all the memory settings and enable or disable specific memory functions, such as system memory testing and node interleaving.

Related tasks

Viewing Memory Settings

Related reference

Memory Settings details
System BIOS

Viewing Memory Settings

To view the **Memory Settings** screen, perform the following steps:

Steps

1. Turn on, or restart your system.
2. Press F2 immediately after you see the following message:

```
F2 = System Setup
```

   NOTE: If your operating system begins to load before you press F2, wait for the system to finish booting, and then restart your system and try again.

3. On the **System Setup Main Menu** screen, click **System BIOS**.
4. On the **System BIOS** screen, click **Memory Settings**.

Related reference

Memory Settings
Memory Settings details

Memory Settings details

About this task

The **Memory Settings** screen details are explained as follows:

Option	Description
System Memory Size	Specifies the memory size in the system.
System Memory Type	Specifies the type of memory installed in the system.
System Memory Speed	Specifies the system memory speed.
System Memory Voltage	Specifies the system memory voltage.
Video Memory	Specifies the amount of video memory.
System Memory Testing	Specifies whether the system memory tests are run during system boot. Options are **Enabled** and **Disabled**. This option is set to **Disabled** by default.
Memory Operating Mode	Specifies the memory operating mode. The options available are **Optimizer Mode**, **Advanced ECC Mode**, **Mirror Mode**, **Spare Mode**, **Spare with Advanced ECC Mode**, **Dell Fault Resilient Mode** and **Dell NUMA Fault Resilient Mode**. This option is set to **Optimizer Mode** by default. **NOTE: The Memory Operating Mode option can have different default and available options based on the memory configuration of your system.**

Option	Description
	NOTE: The Dell Fault Resilient Mode option establishes an area of memory that is fault resilient. This mode can be used by an operating system that supports the feature to load critical applications or enables the operating system kernel to maximize system availability.
Node Interleaving	Specifies if Non-Uniform Memory architecture (NUMA) is supported. If this field is set to **Enabled**, memory interleaving is supported if a symmetric memory configuration is installed. If the field is set to **Disabled**, the system supports NUMA (asymmetric) memory configurations. This option is set to **Disabled** by default.
Snoop Mode	Specifies the Snoop Mode options. The Snoop Mode options available are **Home Snoop**, **Early Snoop**, and **Cluster on Die**. This option is set to **Early Snoop** by default. This field is available only when the **Node Interleaving** is set to **Disabled**.

Related tasks

Viewing Memory Settings

Related reference

Memory Settings

Processor Settings

You can use the **Processor Settings** screen to view the processor settings, and perform specific functions such as enabling virtualization technology, hardware prefetcher, and logical processor idling.

Related tasks

Viewing Processor Settings

Related reference

Processor Settings details
System BIOS

Viewing Processor Settings

To view the **Processor Settings** screen, perform the following steps:

Steps

1. Turn on, or restart your system.
2. Press F2 immediately after you see the following message:

```
F2 = System Setup
```

NOTE: If your operating system begins to load before you press F2, wait for the system to finish booting, and then restart your system and try again.

3. On the **System Setup Main Menu** screen, click **System BIOS**.
4. On the **System BIOS** screen, click **Processor Settings**.

Related reference

Processor Settings
Processor Settings details

Processor Settings details

About this task

The **Processor Settings** screen details are explained as follows:

Option	Description
Logical Processor	Enables or disables the logical processors and displays the number of logical processors. If this option is set to **Enabled**, the BIOS displays all the logical processors. If this option is set to **Disabled**, the BIOS displays only one logical processor per core. This option is set to **Enabled** by default.
QPI Speed	Enables you to control QuickPath Interconnect data rate settings.
Alternate RTID (Requestor Transaction ID) Setting	Modifies Requestor Transaction IDs, which are QPI resources. This option is set to **Disabled** by default. **NOTE: Enabling this option may negatively impact the overall system performance.**
Virtualization Technology	Enables or disables the additional hardware capabilities provided for virtualization. This option is set to **Enabled** by default.
Address Translation Service (ATS)	Defines the Address Translation Cache (ATC) for devices to cache the DMA transactions. This option provides an interface between CPU and DMA Memory Management to a chipset's Address Translation and Protection Table to translate DMA addresses to host addresses. This option is set to **Enabled** by default.
Adjacent Cache Line Prefetch	Optimizes the system for applications that need high utilization of sequential memory access. This option is set to **Enabled** by default. You can disable this option for applications that need high utilization of random memory access.
Hardware Prefetcher	Enables or disables the hardware prefetcher. This option is set to **Enabled** by default.
DCU Streamer Prefetcher	Enables or disables the Data Cache Unit (DCU) streamer prefetcher. This option is set to **Enabled** by default.
DCU IP Prefetcher	Enables or disables the Data Cache Unit (DCU) IP prefetcher. This option is set to **Enabled** by default.
Execute Disable	Enables you to run the disable memory protection technology. This option is set to **Enabled** by default.
Logical Processor Idling	Enables you to improve the energy efficiency of a system. It uses the operating system core parking algorithm and parks some of the logical processors in the system which in turn allows the corresponding processor cores to transition into a lower power idle state. This option can only be enabled if the operating system supports it. It is set to **Disabled** by default.
Configurable TDP	Enables you to reconfigure the processor Thermal Design Power (TDP) levels during POST based on the power and thermal delivery capabilities of the system. TDP verifies the maximum heat the cooling system is needed to dissipate. This option is set to **Nominal** by default. **NOTE: This option is only available on certain stock keeping units (SKUs) of the processors.**
X2Apic Mode	Enables or disables the X2Apic mode.
Number of Cores per Processor	Controls the number of enabled cores in each processor. This option is set to **All** by default.
Processor 64-bit Support	Specifies if the processor(s) support 64-bit extensions.
Processor Core Speed	Specifies the maximum core frequency of the processor.
Process Bus Speed	Displays the bus speed of the processor. **NOTE: The processor bus speed option displays only when both processors are installed.**
Processor 1	**NOTE: Depending on the number of CPUs, there may be up to four processors listed.** The following settings are displayed for each processor installed in the system:

Option	Description
Family-Model-Stepping	Specifies the family, model, and stepping of the processor as defined by Intel.
Brand	Specifies the brand name.
Level 2 Cache	Specifies the total L2 cache.

Option	Description

Option	Description
Level 3 Cache	Specifies the total L3 cache.
Number of Cores	Specifies the number of cores per processor.

Related tasks

Viewing Processor Settings

Related reference

Processor Settings

SATA Settings

You can use the **SATA Settings** screen to view the SATA settings of SATA devices and enable RAID on your system.

Related tasks

SATA Settings details
Viewing SATA Settings

Related reference

System BIOS

Viewing SATA Settings

To view the **SATA Settings** screen, perform the following steps:

Steps

1. Turn on, or restart your system.
2. Press F2 immediately after you see the following message:

```
F2 = System Setup
```

NOTE: If your operating system begins to load before you press F2, wait for the system to finish booting, and then restart your system and try again.

3. On the **System Setup Main Menu** screen, click **System BIOS**.
4. On the **System BIOS** screen, click **SATA Settings**.

Related tasks

SATA Settings details

Related reference

SATA Settings

SATA Settings details

About this task

The **SATA Settings** screen details are explained as follows:

Option	Description
Embedded SATA	Enables the embedded SATA option to be set to **Off**, **ATA**, **AHCI**, or **RAID** modes. This option is set to **AHCI** by default.

Option	Description
Security Freeze Lock	Sends Security Freeze Lock command to the Embedded SATA drives during POST. This option is applicable only for ATA and AHCI modes.
Write Cache	Enables or disables the command for Embedded SATA drives during POST.
Port A	Sets the drive type of the selected device. For **Embedded SATA settings** in **ATA** mode, set this field to **Auto** to enable BIOS support. Set it to **OFF** to turn off BIOS support. For **AHCI** or **RAID** mode, BIOS support is always enabled.

Option	Description
Model	Specifies the drive model of the selected device.
Drive Type	Specifies the type of drive attached to the SATA port.
Capacity	Specifies the total capacity of the hard drive. This field is undefined for removable media devices such as optical drives.

Port B	Sets the drive type of the selected device. For **Embedded SATA settings** in **ATA** mode, set this field to **Auto** to enable BIOS support. Set it to **OFF** to turn off BIOS support. For **AHCI** or **RAID** mode, BIOS support is always enabled.

Option	Description
Model	Specifies the drive model of the selected device.
Drive Type	Specifies the type of drive attached to the SATA port.
Capacity	Specifies the total capacity of the hard drive. This field is undefined for removable media devices such as optical drives.

Port C	Sets the drive type of the selected device. For **Embedded SATA settings** in **ATA** mode, set this field to **Auto** to enable BIOS support. Set it to **OFF** to turn off BIOS support. For **AHCI** or **RAID** mode, BIOS support is always enabled.

Option	Description
Model	Specifies the drive model of the selected device.
Drive Type	Specifies the type of drive attached to the SATA port.
Capacity	Specifies the total capacity of the hard drive. This field is undefined for removable media devices such as optical drives.

Port D	Sets the drive type of the selected device. For **Embedded SATA settings** in **ATA** mode, set this field to **Auto** to enable BIOS support. Set it to **OFF** to turn off BIOS support. For **AHCI** or **RAID** mode, BIOS support is always enabled.

Option	Description
Model	Specifies the drive model of the selected device.
Drive Type	Specifies the type of drive attached to the SATA port.
Capacity	Specifies the total capacity of the hard drive. This field is undefined for removable media devices such as optical drives.

Port E	Sets the drive type of the selected device. For **Embedded SATA settings** in **ATA** mode, set this field to **Auto** to enable BIOS support. Set it to **OFF** to turn off BIOS support. For **AHCI** or **RAID** mode, BIOS support is always enabled.

Option	Description
Model	Specifies the drive model of the selected device.
Drive Type	Specifies the type of drive attached to the SATA port.

Option	Description

Option	Description
Capacity	Specifies the total capacity of the hard drive. This field is undefined for removable media devices such as optical drives.

Port F

Sets the drive type of the selected device. For **Embedded SATA settings** in **ATA** mode, set this field to **Auto** to enable BIOS support. Set it to **OFF** to turn off BIOS support.

For **AHCI** or **RAID** mode, BIOS support is always enabled.

Option	Description
Model	Specifies the drive model of the selected device.
Drive Type	Specifies the type of drive attached to the SATA port.
Capacity	Specifies the total capacity of the hard drive. This field is undefined for removable media devices such as optical drives.

Port G

Sets the drive type of the selected device. For **Embedded SATA settings** in **ATA** mode, set this field to **Auto** to enable BIOS support. Set it to **OFF** to turn off BIOS support.

For **AHCI** or **RAID** mode, BIOS support is always enabled.

Option	Description
Model	Specifies the drive model of the selected device.
Drive Type	Specifies the type of drive attached to the SATA port.
Capacity	Specifies the total capacity of the hard drive. This field is undefined for removable media devices such as optical drives.

Port H

Sets the drive type of the selected device. For **Embedded SATA settings** in **ATA** mode, set this field to **Auto** to enable BIOS support. Set it to **OFF** to turn off BIOS support.

For **AHCI** or **RAID** mode, BIOS support is always enabled.

Option	Description
Model	Specifies the drive model of the selected device.
Drive Type	Specifies the type of drive attached to the SATA port.
Capacity	Specifies the total capacity of the hard drive. This field is undefined for removable media devices such as optical drives.

Port I

Sets the drive type of the selected device. For **Embedded SATA settings** in **ATA** mode, set this field to **Auto** to enable BIOS support. Set it to **OFF** to turn off BIOS support.

For **AHCI** or **RAID** mode, BIOS support is always enabled.

Option	Description
Model	Specifies the drive model of the selected device.
Drive Type	Specifies the type of drive attached to the SATA port.
Capacity	Specifies the total capacity of the hard drive. This field is undefined for removable media devices such as optical drives.

Port J

Sets the drive type of the selected device. For **Embedded SATA settings** in **ATA** mode, set this field to **Auto** to enable BIOS support. Set it to **OFF** to turn off BIOS support.

For **AHCI** or **RAID** mode, BIOS support is always enabled.

Option	Description
Model	Specifies the drive model of the selected device.

Option	Description

Option	Description
Drive Type	Specifies the type of drive attached to the SATA port.
Capacity	Specifies the total capacity of the hard drive. This field is undefined for removable media devices such as optical drives.

Related tasks

Viewing SATA Settings

Related reference

SATA Settings

Integrated Devices

You can use the **Integrated Devices** screen to view and configure the settings of all integrated devices including the video controller, integrated RAID controller, and the USB ports.

Related tasks

Integrated Devices details
Viewing Integrated Devices

Related reference

System BIOS

Viewing Integrated Devices

To view the **Integrated Devices** screen, perform the following steps:

Steps

1. Turn on, or restart your system.
2. Press F2 immediately after you see the following message:

```
F2 = System Setup
```

   NOTE: If your operating system begins to load before you press F2, wait for the system to finish booting, and then restart your system and try again.

3. On the **System Setup Main Menu** screen, click **System BIOS**.
4. On the **System BIOS** screen, click **Integrated Devices**.

Related tasks

Integrated Devices details

Related reference

Integrated Devices

Integrated Devices details

About this task

The **Integrated Devices** screen details are explained as follows:

Option	Description
USB 3.0 Setting	Enables or disables the USB 3.0 support. Enable this option only if your operating system supports USB 3.0. If you disable this option, devices operate at USB 2.0 speed. USB 3.0 is enabled by default.
User Accessible USB Ports	Enables or disables the USB ports. Selecting **Only Back Ports On** disables the front USB ports, selecting **All Ports Off** disables all USB ports. The USB keyboard and mouse operate during boot process in certain operating systems. After the boot process is complete, the USB keyboard and mouse do not work if the ports are disabled. **NOTE: Selecting Only Back Ports On and All Ports Off disables the USB management port and also restricts access to iDRAC features.**
Internal USB Port	Enables or disables the internal USB port. This option is set to **Enabled** by default.
Integrated RAID Controller	Enables or disables the integrated RAID controller. This option is set to **Enabled** by default.
Embedded NIC1 and NIC2	**NOTE: The Embedded NIC1 and NIC2 options are only available on systems that do not have Integrated Network Card 1.** Enables or disables the Embedded NIC1 and NIC2 options. If set to **Disabled**, the NIC may still be available for shared network access by the embedded management controller. The embedded NIC1 and NIC2 options are only available on systems that do not have Network Daughter Cards (NDCs). The Embedded NIC1 and NIC2 option is mutually exclusive with the Integrated Network Card 1 option. Configure the Embedded NIC1 and NIC2 option by using the NIC management utilities of the system.
Embedded NIC3 and NIC4	Allows you to enable or disable the Embedded NIC3 and NIC4. If set to **Disabled**, the NIC may still be available for shared network access by the embedded management controller. Configure this function using the NIC management utilities of the system.
I/OAT DMA Engine	Enables or disables the I/OAT option. Enable only if the hardware and software support the feature.
Embedded Video Controller	Enables or disables the **Embedded Video Controller** option. This option is set to **Enabled** by default.
Current State of Embedded Video Controller	Displays the current state of the embedded video controller. The **Current State of Embedded Video Controller** option is a read-only field. If the Embedded Video Controller is the only display capability in the system (that is, no add-in graphics card is installed), then the Embedded Video Controller is automatically used as the primary display even if the **Embedded Video Controller** setting is set to **Disabled**.
SR-IOV Global Enable	Enables or disables the BIOS configuration of Single Root I/O Virtualization (SR-IOV) devices. This option is set to **Disabled** by default.
OS Watchdog Timer	If your system stops responding, this watchdog timer aids in the recovery of your operating system. When this option is set to **Enabled**, the operating system initializes the timer. When this option is set to **Disabled** (the default), the timer does not have any effect on the system.
Memory Mapped I/O above 4 GB	Enables or disables the support for PCIe devices that need large amounts of memory. This option is set to **Enabled** by default.
Slot Disablement	Enables or disables the available PCIe slots on your system. The slot disablement feature controls the configuration of PCIe cards installed in the specified slot. Slots must be disabled only when the installed peripheral card prevents booting into the operating system or causes delays in system startup. If the slot is disabled, both the Option ROM and UEFI drivers are disabled.

Related tasks

Viewing Integrated Devices

Related reference

Integrated Devices

Serial Communication

You can use the **Serial Communication** screen to view the properties of the serial communication port.

Related tasks

Serial Communication details
Viewing Serial Communication

Related reference

System BIOS

Viewing Serial Communication

To view the **Serial Communication** screen, perform the following steps:

Steps

1. Turn on, or restart your system.
2. Press F2 immediately after you see the following message:

```
F2 = System Setup
```

   NOTE: If your operating system begins to load before you press F2, wait for the system to finish booting, and then restart your system and try again.

3. On the **System Setup Main Menu** screen, click **System BIOS**.
4. On the **System BIOS** screen, click **Serial Communication**.

Related tasks

Serial Communication details

Related reference

Serial Communication

Serial Communication details

About this task

The **Serial Communication** screen details are explained as follows:

Option	Description
Serial Communication	Selects serial communication devices (Serial Device 1 and Serial Device 2) in BIOS. BIOS console redirection can also be enabled and the port address can be specified. This option is set to **Auto** by default.
Serial Port Address	Enables you to set the port address for serial devices. This option is set to **Serial Device 1=COM2, Serial Device 2=COM1** by default. **NOTE: You can use only Serial Device 2 for the Serial Over LAN (SOL) feature. To use console redirection by SOL, configure the same port address for console redirection and the serial device.** **NOTE: Every time the system boots, the BIOS syncs the serial MUX setting saved in iDRAC. The serial MUX setting can independently be changed in iDRAC. Loading the BIOS default settings from within the BIOS setup utility may not always revert the serial MUX setting to the default setting of Serial Device 1.**
External Serial Connector	Enables you to associate the External Serial Connector to Serial Device 1, Serial Device 2, or the Remote Access Device by using this option. **NOTE: Only Serial Device 2 can be used for Serial Over LAN (SOL). To use console redirection by SOL, configure the same port address for console redirection and the serial device.**

Option	Description
	NOTE: Every time the system boots, the BIOS syncs the serial MUX setting saved in iDRAC. The serial MUX setting can independently be changed in iDRAC. Loading the BIOS default settings from within the BIOS setup utility may not always revert this setting to the default setting of Serial Device 1.
Failsafe Baud Rate	Specifies the failsafe baud rate for console redirection. The BIOS attempts to determine the baud rate automatically. This failsafe baud rate is used only if the attempt fails, and the value must not be changed. This option is set to `115200` by default.
Remote Terminal Type	Sets the remote console terminal type. This option is set to `VT 100/VT 220` by default.
Redirection After Boot	Enables or disables the BIOS console redirection when the operating system is loaded. This option is set to **Enabled** by default.

Related tasks

Viewing Serial Communication

Related reference

Serial Communication

System Profile Settings

You can use the **System Profile Settings** screen to enable specific system performance settings such as power management.

Related tasks

System Profile Settings details
Viewing System Profile Settings

Related reference

System BIOS

Viewing System Profile Settings

To view the **System Profile Settings** screen, perform the following steps:

Steps

1. Turn on, or restart your system.
2. Press F2 immediately after you see the following message:

```
F2 = System Setup
```

NOTE: If your operating system begins to load before you press F2, wait for the system to finish booting, and then restart your system and try again.

3. On the **System Setup Main Menu** screen, click **System BIOS**.
4. On the **System BIOS** screen, click **System Profile Settings**.

Related tasks

System Profile Settings details

Related reference

System Profile Settings

System Profile Settings details

About this task

The **System Profile Settings** screen details are explained as follows:

Option	Description
System Profile	Sets the system profile. If you set the **System Profile** option to a mode other than **Custom**, the BIOS automatically sets the rest of the options. You can only change the rest of the options if the mode is set to **Custom**. This option is set to **Performance Per Watt Optimized (DAPC)** by default. DAPC is Dell Active Power Controller. **NOTE: All the parameters on the system profile setting screen are available only when the System Profile option is set to Custom.**
CPU Power Management	Sets the CPU power management. This option is set to **System DBPM (DAPC)** by default. DBPM is Demand-Based Power Management.
Memory Frequency	Sets the speed of the system memory. You can select **Maximum Performance**, **Maximum Reliability**, or a specific speed.
Turbo Boost	Enables or disables the processor to operate in the turbo boost mode. This option is set to **Enabled** by default.
Energy Efficient Turbo	Enables or disables the **Energy Efficient Turbo** option. Energy Efficient Turbo (EET) is a mode of operation where a processor's core frequency is adjusted to be within the turbo range based on workload.
C1E	Enables or disables the processor to switch to a minimum performance state when it is idle. This option is set to **Enabled** by default.
C States	Enables or disables the processor to operate in all available power states. This option is set to **Enabled** by default.
Collaborative CPU Performance Control	Enables or disables the CPU power management option. When set to **Enabled**, the CPU power management is controlled by the OS DBPM and the System DBPM (DAPC). This option is set to **Disabled** by default.
Memory Patrol Scrub	Sets the memory patrol scrub frequency. This option is set to **Standard** by default.
Memory Refresh Rate	Sets the memory refresh rate to either 1x or 2x. This option is set to **1x** by default.
Uncore Frequency	Enables you to select the **Processor Uncore Frequency** option. Dynamic mode enables the processor to optimize power resources across the cores and uncore during runtime. The optimization of the uncore frequency to either save power or optimize performance is influenced by the setting of the **Energy Efficiency Policy** option.
Energy Efficient Policy	Enables you to select the **Energy Efficient Policy** option. The CPU uses the setting to manipulate the internal behavior of the processor and determines whether to target higher performance or better power savings.
Number of Turbo Boot Enabled Cores for Processor 1	**NOTE: If there are two processors installed in the system, you see an entry for Number of Turbo Boost Enabled Cores for Processor 2.** Controls the number of turbo boost enabled cores for processor 1. The maximum number of cores is enabled by default.
Monitor/Mwait	Enables the Monitor/Mwait instructions in the processor. This option is set to **Enabled** for all system profiles, except **Custom** by default. **NOTE: This option can be disabled only if the C States option in the Custom mode is set to disabled.** **NOTE: When C States is set to Enabled in the Custom mode, changing the Monitor/Mwait setting does not impact the system power or performance.**

Related tasks

Viewing System Profile Settings

Related reference

System Profile Settings

Miscellaneous Settings

You can use the **Miscellaneous Settings** screen to perform specific functions such as updating the asset tag and changing the system date and time.

Related tasks

Miscellaneous Settings details
Viewing Miscellaneous Settings

Related reference

System BIOS

Viewing Miscellaneous Settings

To view the **Miscellaneous Settings** screen, perform the following steps:

Steps

1. Turn on, or restart your system.
2. Press F2 immediately after you see the following message:

```
F2 = System Setup
```

   NOTE: If your operating system begins to load before you press F2, wait for the system to finish booting, and then restart your system and try again.

3. On the **System Setup Main Menu** screen, click **System BIOS**.
4. On the **System BIOS** screen, click **Miscellaneous Settings**.

Related tasks

Miscellaneous Settings details

Related reference

Miscellaneous Settings

Miscellaneous Settings details

About this task

The **Miscellaneous Settings** screen details are explained as follows:

Option	Description
System Time	Enables you to set the time on the system.
System Date	Enables you to set the date on the system.
Asset Tag	Specifies the asset tag and enables you to modify it for security and tracking purposes.
Keyboard NumLock	Enables you to set whether the system boots with the NumLock enabled or disabled. This option is set to **On** by default. **NOTE: This option does not apply to 84-key keyboards.**
F1/F2 Prompt on Error	Enables or disables the F1/F2 prompt on error. This option is set to **Enabled** by default. The F1/F2 prompt also includes keyboard errors.

Option	Description
Load Legacy Video Option ROM	Enables you to determine whether the system BIOS loads the legacy video (INT 10H) option ROM from the video controller. Selecting **Enabled** in the operating system does not support UEFI video output standards. This field is available only for UEFI boot mode. You cannot set the option to **Enabled** if **UEFI Secure Boot** mode is enabled.

Related tasks

Viewing Miscellaneous Settings

Related reference

Miscellaneous Settings

iDRAC Settings utility

The iDRAC settings utility is an interface to set up and configure the iDRAC parameters by using UEFI. You can enable or disable various iDRAC parameters by using the iDRAC settings utility.

NOTE: Accessing some of the features on the iDRAC settings utility needs the iDRAC Enterprise License upgrade.

For more information about using iDRAC, see *Dell Integrated Dell Remote Access Controller User's Guide* at **Dell.com/idracmanuals**.

Related concepts

Device Settings

Related tasks

Entering the iDRAC Settings utility
Changing the thermal settings

Related reference

System BIOS

Entering the iDRAC Settings utility

Steps

1. Turn on or restart the managed system.
2. Press F2 during Power-on Self-test (POST).
3. On the **System Setup Main Menu** page, click **iDRAC Settings**.
   The **iDRAC Settings** screen is displayed.

Related reference

iDRAC Settings utility

Changing the thermal settings

The iDRAC settings utility enables you to select and customize the thermal control settings for your system.

1. Click **iDRAC Settings** > **Thermal**.
2. Under **SYSTEM THERMAL PROFILE** > **Thermal Profile**, select one of the following options:
   - Default Thermal Profile Settings
   - Maximum Performance (Performance Optimized)
   - Minimum Power (Performance per Watt Optimized)
3. Under **USER COOLING OPTIONS**, set the **Fan Speed Offset**, **Minimum Fan Speed**, and **Custom Minimum Fan Speed**.
4. Click **Back** > **Finish** > **Yes**.

Related reference

iDRAC Settings utility

Device Settings

Device Settings enables you to configure device parameters.

Related reference

System BIOS

Dell Lifecycle Controller

Dell Lifecycle Controller (LC) provides advanced embedded systems management capabilities including system deployment, configuration, update, maintenance, and diagnosis. LC is delivered as part of the iDRAC out-of-band solution and Dell system embedded Unified Extensible Firmware Interface (UEFI) applications.

Related reference

Embedded system management

Embedded system management

The Dell Lifecycle Controller provides advanced embedded systems management throughout the system's lifecycle. The Dell Lifecycle Controller can be started during the boot sequence and can function independently of the operating system.

NOTE: Certain platform configurations may not support the full set of features provided by the Dell Lifecycle Controller.

For more information about setting up the Dell Lifecycle Controller, configuring hardware and firmware, and deploying the operating system, see the Dell Lifecycle Controller documentation at **Dell.com/idracmanuals**.

Related reference

Dell Lifecycle Controller

Boot Manager

The **Boot Manager** screen enables you to select boot options and diagnostic utilities.

Related tasks

Viewing Boot Manager

Related reference

Boot Manager main menu
System BIOS

Viewing Boot Manager

To enter **Boot Manager**:

Steps

1. Turn on, or restart your system.
2. Press F11 when you see the following message:

```
F11 = Boot Manager
```

If your operating system begins to load before you press F11, allow the system to complete the booting, and then restart your system and try again.

Related reference

Boot Manager
Boot Manager main menu

Boot Manager main menu

Menu item	Description
Continue Normal Boot	The system attempts to boot to devices starting with the first item in the boot order. If the boot attempt fails, the system continues with the next item in the boot order until the boot is successful or no more boot options are found.
One-shot Boot Menu	Enables you to access boot menu, where you can select a one-time boot device to boot from.
Launch System Setup	Enables you to access System Setup.
Launch Lifecycle Controller	Exits the Boot Manager and invokes the Dell Lifecycle Controller program.
System Utilities	Enables you to launch System Utilities menu such as System Diagnostics and UEFI shell.

Related tasks

Viewing Boot Manager

Related reference

Boot Manager

One-shot BIOS boot menu

One-shot BIOS boot menu enables you to select a boot device to boot from.

Related reference

Boot Manager

System Utilities

System Utilities contains the following utilities that can be launched:

- Launch Diagnostics
- BIOS Update File Explorer
- Reboot System

Related reference

Boot Manager

PXE boot

The Preboot Execution Environment (PXE) is an industry standard client or interface that allows networked computers that are not yet loaded with an operating system to be configured and booted remotely by an administrator.

6

Installing and removing system components

This section provides information about installing and removing the system components.

Topics:

- Safety instructions
- Before working inside your system
- After working inside your system
- Recommended tools
- Front bezel (optional)
- System cover
- Inside the system
- Cooling shroud
- System memory
- Hard drives
- Optical drive (optional)
- Cooling fans
- Internal USB memory key (optional)
- Expansion cards and expansion card riser
- iDRAC port card (optional)
- SD vFlash card (optional)
- Internal dual SD module (optional)
- Integrated storage controller card
- Processors and heat sinks
- Power supply units (PSU)
- Power interposer board
- System battery
- Hard drive backplane
- Control panel
- System board
- Trusted Platform Module

Safety instructions

NOTE: Whenever you need to lift the system, get others to assist you. To avoid injury, do not attempt to lift the system by yourself.

WARNING: Opening or removing the system cover while the system is powered on may expose you to a risk of electric shock.

CAUTION: Do not operate the system without the cover for a duration exceeding five minutes.

CAUTION: Many repairs may only be done by a certified service technician. You should only perform troubleshooting and simple repairs as authorized in your product documentation, or as directed by the online or telephone service and support team. Damage due to servicing that is not authorized by Dell is not covered by your warranty. Read and follow the safety instructions that are shipped with your product.

NOTE: Dell recommends that you always use a static mat and static strap while working on components inside the system.

NOTE: To ensure proper operation and cooling, all bays in the system and system fans must be populated always with either a component or with a blank.

Before working inside your system

Prerequisites

Follow the safety guidelines listed in the Safety instructions section.

Steps

1. Turn off the system, including any attached peripherals.
2. Disconnect the system from the electrical outlet and disconnect the peripherals.
3. If installed, remove the front bezel.
4. If applicable, remove the system from the rack.
   For more information, see the *Rack Installation* placemat at **Dell.com/poweredgemanuals**.
5. Remove the system cover.

Related tasks

Removing the optional front bezel
Removing the system cover

After working inside your system

Prerequisites

Follow the safety guidelines listed in the Safety instructions section.

Steps

1. Install the system cover.
2. If applicable, install the system into the rack.
   For more information, see the *Rack Installation* placemat at **Dell.com/poweredgemanuals**.
3. If removed, install the optional front bezel.
4. Reconnect the peripherals and connect the system to the electrical outlet.
5. Turn on the system, including any attached peripherals.

Related tasks

Installing the system cover
Installing the optional front bezel

Recommended tools

You need the following tools to perform the removal and installation procedures:

- Key to the bezel lock.

  This is needed only if your system includes a bezel.
- Phillips #1 screwdriver
- Phillips #2 screwdriver
- Wrist grounding strap

You need the following tools to assemble the cables for a DC power supply unit.

- AMP 90871-1 hand-crimping tool or equivalent
- Wire-stripper pliers to remove insulation from size 10 AWG solid or stranded, insulated copper wire

  NOTE: Use alpha wire part number 3080 or equivalent (65/30 stranding).

Front bezel (optional)

The front bezel is attached to the front side of the server and prevents accidents while removing the hard drive or when pressing the reset or power button. The front bezel can also be locked for additional security.

Removing the optional front bezel

Prerequisites

Follow the safety guidelines listed in the Safety instructions section.

Steps

1. Locate and remove the bezel key.

   NOTE: The bezel key is attached to the back of the bezel.

2. Unlock the bezel by using the key.
3. Slide the release latch up and pull the left end of the bezel.
4. Unhook the right end, and remove the bezel.

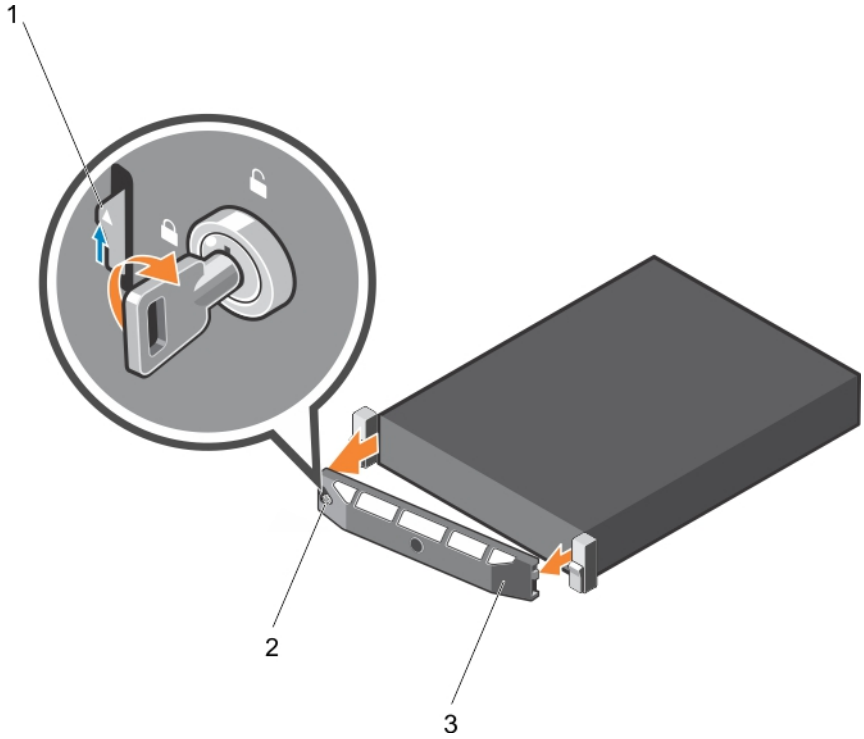

Figure 11. Removing the optional front bezel

a. release latch
b. bezel lock
c. front bezel

Installing the optional front bezel

Prerequisites

Follow the safety guidelines listed in the Safety instructions section.

Steps

1. Locate and remove the bezel key.

NOTE: The bezel key is attached to the back of the bezel.

2. Hook the right end of the bezel onto the chassis.
3. Fit the free end of the bezel onto the system.
4. Lock the bezel by using the key.

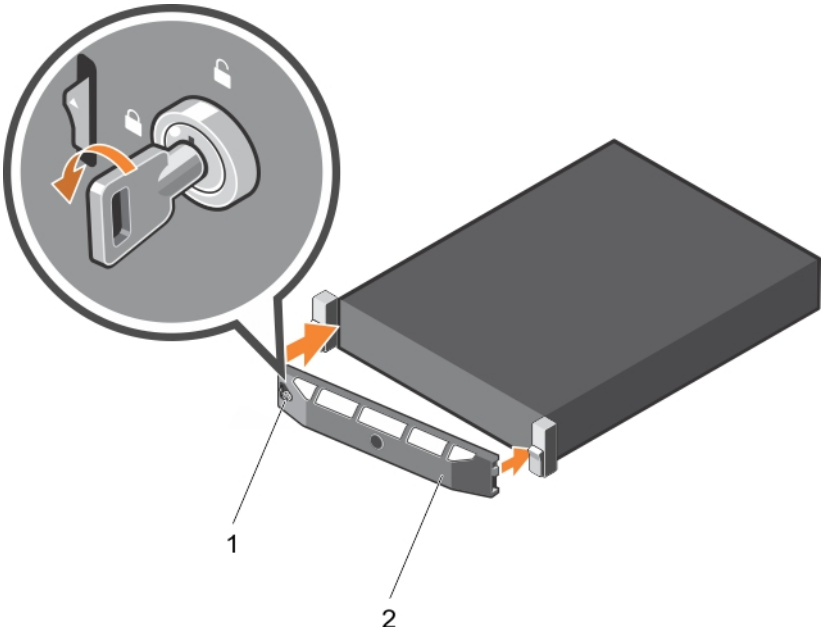

Figure 12. Installing the optional front bezel

a. bezel lock
b. front bezel

System cover

The system cover protects the components inside the system and helps in maintaining air flow inside the system. Removing the system cover actuates the intrusion switch which aids in maintaining system security.

Removing the system cover

Prerequisites

1. Follow the safety guidelines listed in the Safety instructions section.
2. If installed, remove the optional bezel. For more information, see the Removing the optional front bezel section.

Steps

1. Rotate the latch release lock counter clockwise to the unlocked position.
2. Lift the latch toward the back of the system.

   The system cover slides back and the tabs on the system cover disengage from the slots on the chassis.

   NOTE: The position of the latch may vary depending on the configuration of your system.
3. Hold the cover on both sides, and lift the cover away from the system.

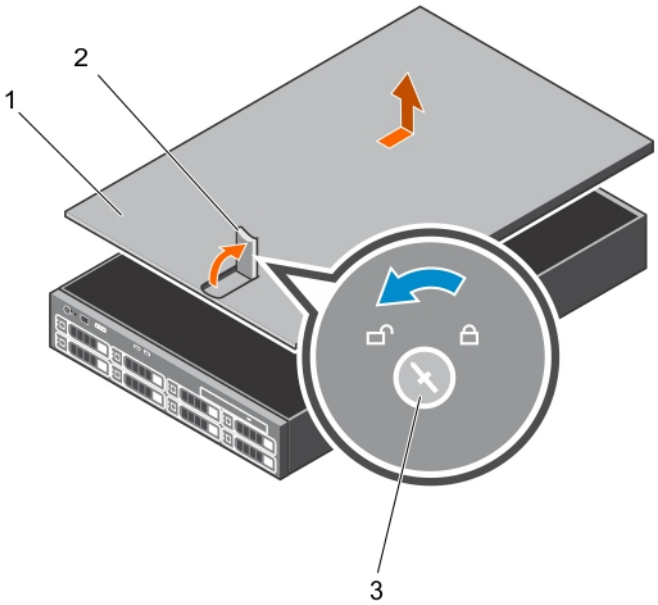

Figure 13. Opening and closing the system

a. system cover
b. latch
c. latch release lock

Next steps

1. Install the system cover.
2. Follow the procedure listed in the After working inside your system section.

Related tasks

Installing the system cover
Before working inside your system
After working inside your system

Related reference

Safety instructions

Installing the system cover

Prerequisites

1. Follow the safety guidelines listed in the Safety instructions section.
2. Ensure that all internal cables are connected and placed out of the way and no tools or extra parts are left inside the system.

Steps

1. Align the slots on the system cover with the tabs on the chassis.
2. Push the system cover latch down to move the system cover into the closed position.

   The system cover slides forward and the slots on the system cover engage with the tabs on the chassis. The system cover latch locks into place when the system cover is completely engaged with the tabs on the chassis.
3. Rotate the latch release lock clockwise to the locked position.

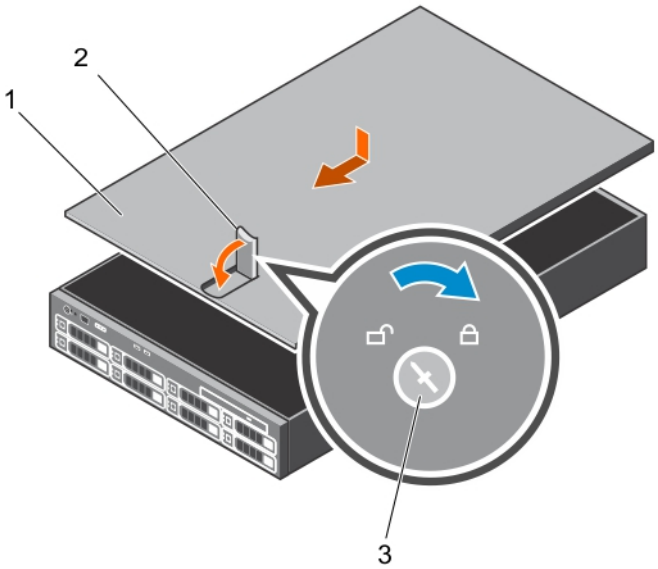

Figure 14. Installing the system cover

a. system cover
b. latch
c. latch release lock

Next steps

1. If removed, install the front bezel.
2. Reconnect the peripherals and connect the system to the electrical outlet.
3. Turn on the system, including any attached peripherals.

Related tasks

Before working inside your system
After working inside your system
Removing the system cover

Related reference

Safety instructions

Inside the system

CAUTION: Many repairs may only be done by a certified service technician. You should only perform troubleshooting and simple repairs as authorized in your product documentation, or as directed by the online or telephone service and support team. Damage due to servicing that is not authorized by Dell is not covered by your warranty. Read and follow the safety instructions that are shipped with your product.

NOTE: Components that are hot swappable are marked orange, and touch-points on the components are marked blue.

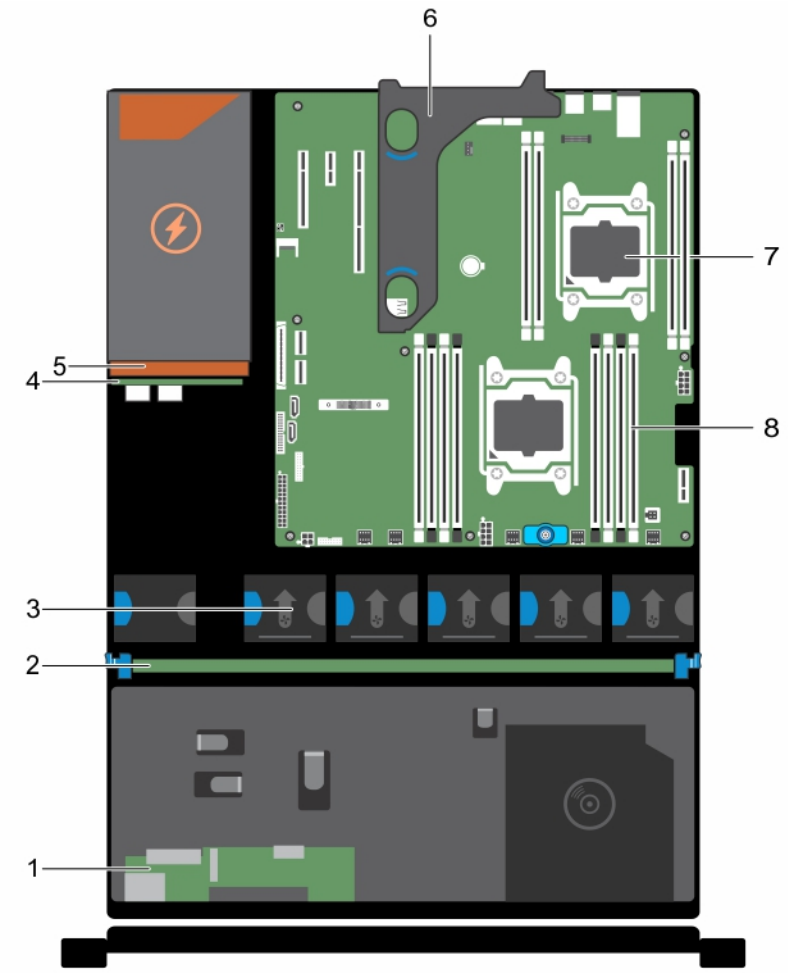

Figure 15. Inside the system—Redundant power supply unit chassis

1. Control panel board
2. Hard drive backplane
3. Cooling fan (5)
4. Power interposer board
5. Power supply unit (redundant)
6. Optional expansion card riser
7. Processor (2)
8. DIMM (12)

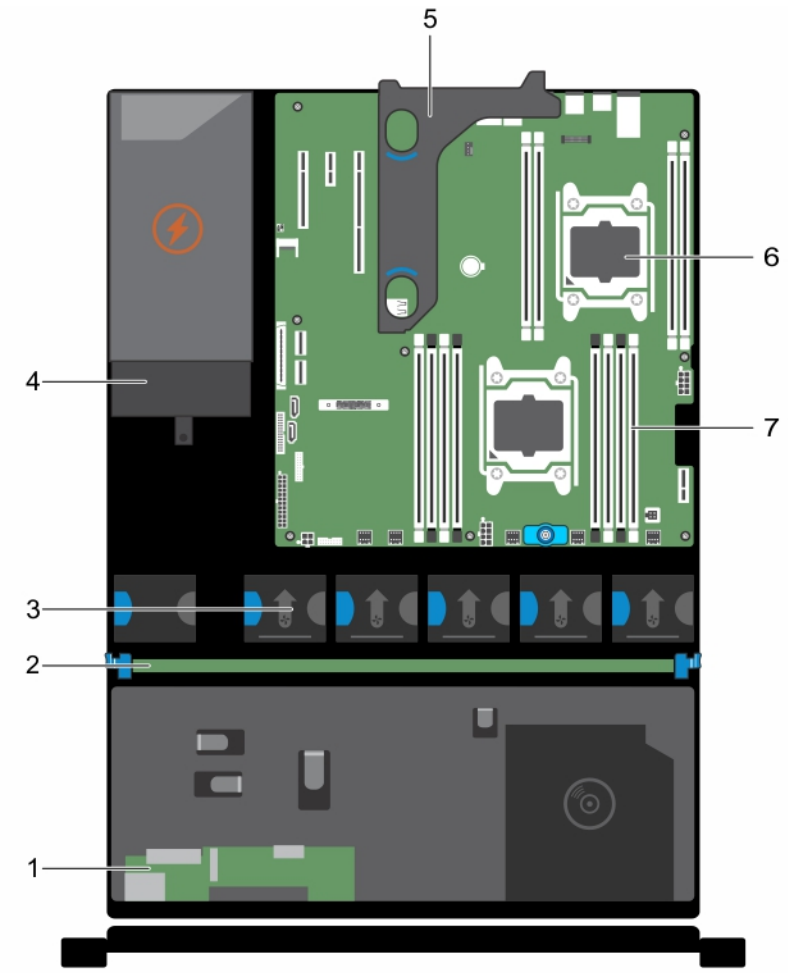

Figure 16. Inside the system—Non redundant power supply unit chassis

1. Control panel board
2. Hard drive backplane
3. Cooling fans (5)
4. Power supply unit (non redundant)
5. Optional expansion card riser
6. Processor (2)
7. DIMM (12)

Cooling shroud

The cooling shroud has aerodynamically placed openings that direct the airflow across the entire system. The airflow passes through all the critical parts of the system, where the vacuum pulls air across the entire surface area of the heat sink, thus allowing increased cooling.

Removing the cooling shroud

Prerequisites

CAUTION: Many repairs may only be done by a certified service technician. You should only perform troubleshooting and simple repairs as authorized in your product documentation, or as directed by the online or telephone service and support team. Damage due to servicing that is not authorized by Dell is not covered by your warranty. Read and follow the safety instructions that are shipped with your product.

1. Follow the safety guidelines listed in the Safety instructions section.
2. Follow the procedure listed in the Before working inside your system section.
3. If connected, disconnect the cables from expansion card (s).

   NOTE: If required, close the expansion card latch on the cooling shroud to release the full length card.
4. If installed, remove the expansion card riser.

CAUTION: Never operate your system with the cooling shroud removed. The system may get overheated quickly, resulting in shutdown of the system and loss of data.

Steps

By holding the sides of the cooling shroud, lift the cooling shroud away from the system.

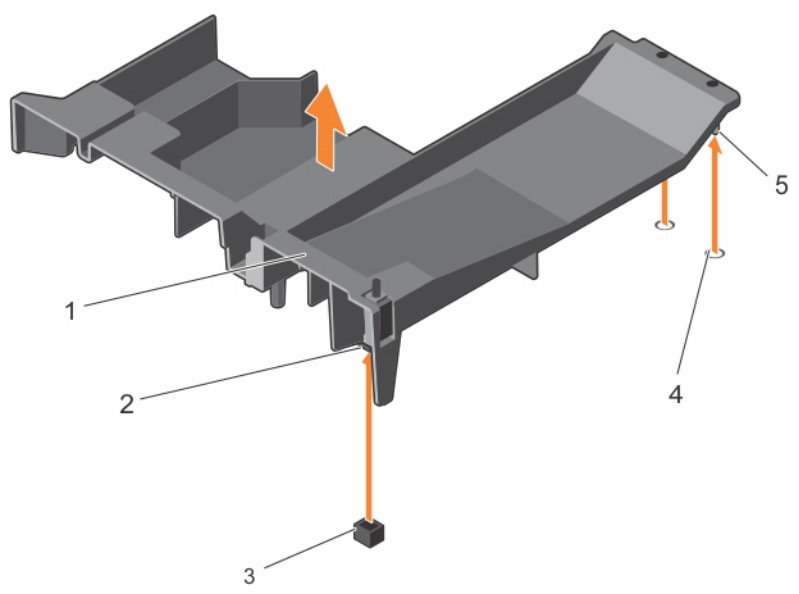

Figure 17. Removing the cooling shroud

1. cooling shroud
2. chassis intrusion switch
3. chassis intrusion switch connector on system board
4. cooling shroud alignment slots
5. cooling shroud alignment pins

Next steps

1. Reinstall the cooling shroud.
2. If removed, reinstall the optional PCIe expansion card riser.
3. If disconnected, connect the cables to the expansion card(s).
4. If required, open the expansion card latch on the cooling shroud to support the full length expansion card.
5. Follow the procedure listed in the After working inside your system section.

Related tasks

Before working inside your system
After working inside your system
Removing the optional expansion card riser
Removing an expansion card from the expansion card riser
Installing an expansion card into the expansion card riser
Installing the optional expansion card riser
Installing the cooling shroud

Related reference

Safety instructions

Installing the cooling shroud

Prerequisites

CAUTION: Many repairs may only be done by a certified service technician. You should only perform troubleshooting and simple repairs as authorized in your product documentation, or as directed by the online or telephone service and support team. Damage due to servicing that is not authorized by Dell is not covered by your warranty. Read and follow the safety instructions that are shipped with your product.

NOTE: For proper seating of the cooling shroud in the chassis, ensure that the cables inside the system are routed along the chassis wall and secured by using the cable securing bracket.

1. Follow the safety guidelines listed in the Safety instructions section.
2. Follow the procedure listed in the Before working inside your system section.

Steps

1. Align the tabs on the cooling shroud with the securing holes at the back of the chassis.
2. Lower the cooling shroud into the chassis until it is firmly seated.

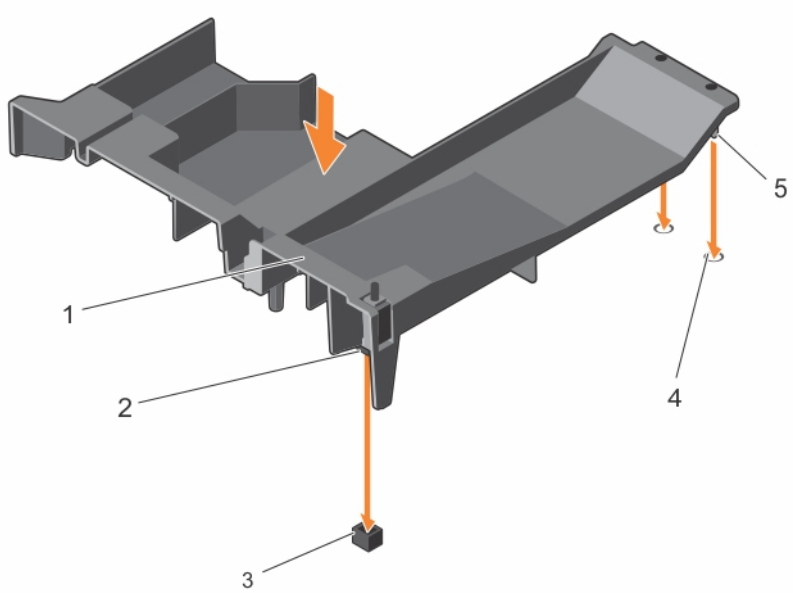

Figure 18. Installing the cooling shroud

1. cooling shroud
2. chassis intrusion switch
3. chassis intrusion switch connector on system board
4. cooling shroud alignment slots
5. cooling shroud alignment pins

Next steps

1. Install the optional PCIe expansion card riser.
2. If disconnected, reconnect thecables to the expansion card(s).
3. If required, open the expansion card latch on the cooling shroud to support the full length expansion card.
4. Follow the procedure listed in the After working inside your system section.

Related tasks

Before working inside your system
After working inside your system
Installing an expansion card into the expansion card riser
Installing the optional expansion card riser

Related reference

Safety instructions

System memory

Your system supports DDR4 registered DIMMs (RDIMMs). It supports DDR4 voltage specifications.

NOTE: MT/s indicates DIMM speed in MegaTransfers per second.

Memory bus operating frequency can be 2400 MT/s, 2133 MT/s, or 1866 MT/s depending on:

- System profile selected (for example, Performance Optimized, Custom, or Dense Configuration Optimized)
- Maximum supported DIMM frequency of the processors

Your system contains 12 memory sockets split into four sets— two sets of 4 sockets and two sets of 2 sockets each. DIMMs in sockets A1 to A8 are assigned to processor 1 and DIMMs in sockets B1 to B4 are assigned to processor 2. Each 4-socket set is organized into two channels and each 2–socket set is organized into one channel. In each channel of the 4-socket set, the release levers of the first socket are marked white and those of the second socket are marked black. In the 2-socket set, each release lever is marked white.

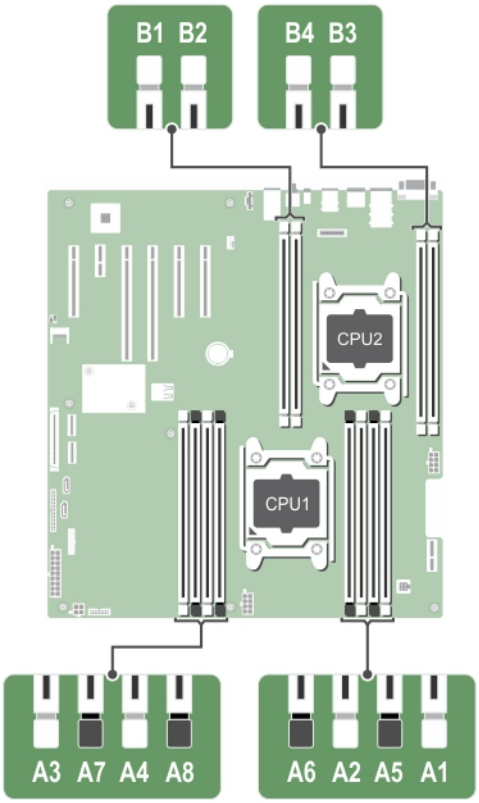

Figure 19. Memory socket locations

Memory channels are organized as follows:

Table 32. Memory channels

Processor	Channel 0	Channel 1	Channel 2	Channel 3
Processor 1	slots A1 and A5	slots A2 and A6	slots A3 and A7	slots A4 and A8
Processor 2	slot B1	slot B2	slot B3	slot B4

The following table shows the memory populations and operating frequencies for the supported configurations.

Table 33. Memory populations and operating frequencies

DIMM Type	DIMMs Populated/ Channel	Voltage	Operating Frequency (in MT/s)	Maximum DIMM Rank/Channel
RDIMM	1 2	1.2 V	2400, 2133, and 1866	Single rank or dual rank

Related reference

Mode-specific guidelines

General memory module installation guidelines

NOTE: Memory configurations that fail to observe these guidelines can prevent your system from booting, stop responding during memory configuration, or operating with reduced memory.

The system supports Flexible Memory Configuration, enabling the system to be configured and run in any valid chipset architectural configuration. The following are the recommended guidelines for installing memory modules:

- x4 and x8 DRAM based memory modules can be mixed. For more information, see the Mode-specific guidelines section.
- Up to two dual- or single-rank RDIMMs can be populated per channel.
- Populate DIMM sockets only if a processor is installed. For single-processor systems, sockets A1 to A8 are available. For dual-processor systems, sockets A1 to A8 and sockets B1 to B4 are available.
- Populate all sockets with white release levers first, and then all the sockets with black release levers.
- When mixing memory modules with different capacities, populate the sockets with memory modules with highest capacity first. For example, if you want to mix 4 GB and 8 GB memory modules, populate 8 GB memory modules in the sockets with white release tabs and 4 GB memory modules in the sockets with black release tabs.
- In a dual-processor configuration, the memory configuration for each processor should be identical. For example, if you populate socket A1 for processor 1, then populate socket B1 for processor 2, and so on.
- Memory modules of different capacities can be mixed provided other memory population rules are followed (for example, 4 GB and 8 GB memory modules can be mixed).
- Mixing of more than two memory module capacities in a system is not supported.
- Populate two DIMMs per processor (one DIMM per channel) at a time to maximize performance,

Related reference

Mode-specific guidelines

Mode-specific guidelines

Four memory channels are allocated to each processor. The allowable configurations depend on the memory mode selected.

Sample memory configurations

The following tables show sample memory configurations for one and two processor configurations that follow the appropriate memory guidelines.

NOTE: 1R and 2R in the following tables indicate single- and dual-rank DIMMs respectively.

Table 34. Memory configurations—single processor

System Capacity (in GB)	DIMM Size (in GB)	Number of DIMMs	DIMM Rank, Organization, and Frequency	DIMM Slot Population
4	4	1	1R, x8, 2400 MT/s, 1R, x8, 2133 MT/s, 1R, x8, 1866 MT/s	A1
8	4	2	1R, x8, 2400 MT/s, 1R, x8, 2133 MT/s,	A1, A2

System Capacity (in GB)	DIMM Size (in GB)	Number of DIMMs	DIMM Rank, Organization, and Frequency	DIMM Slot Population
			1R, x8, 1866 MT/s	
	8	1	1R, x8, 2400 MT/s, 1R, x8, 2133 MT/s, 1R, x8, 1866 MT/s	A1
16	4	4	1R, x8, 2400 MT/s, 1R, x8, 2133 MT/s, 1R, x8, 1866 MT/s	A1, A2, A3, A4
	8	2	2R, x8, 2400 MT/s, 2R, x8, 2133 MT/s, 2R, x8, 1866 MT/s	A1, A2
	16	1	2R, x8, 2400 MT/s, 2R, x8, 2133 MT/s, 2R, x8, 1866 MT/s	A1
24	4	6	1R, x8, 2400 MT/s, 1R, x8, 2133 MT/s, 1R, x8, 1866 MT/s	A1, A2, A3, A4, A5, A6
	8	3	1R, x8, 2400 MT/s, 1R, x8, 2133 MT/s, 1R, x8, 1866 MT/s	A1, A2, A3
32	4	8	1R, x8, 2400 MT/s, 1R, x8, 2133 MT/s, 1R, x8, 1866 MT/s	A1, A2, A3, A4, A5, A6, A7, A8
	8	4	1R, x8, 2400 MT/s, 1R, x8, 2133 MT/s, 1R, x8, 1866 MT/s	A1, A2, A3, A4
	16	2	1R, x8, 2400 MT/s, 1R, x8, 2133 MT/s, 1R, x8, 1866 MT/s	A1, A2
	32	1	1R, x8, 2400 MT/s, 1R, x8, 2133 MT/s, 1R, x8, 1866 MT/s	A1
48	8	6	2R, x8, 2400 MT/s, 2R, x8, 2133 MT/s, 2R, x8, 1866 MT/s	A1, A2, A3, A4, A5, A6
	16	3	2R, x8, 2400 MT/s, 2R, x8, 2133 MT/s, 2R, x8, 1866 MT/s	A1, A2, A3

System Capacity (in GB)	DIMM Size (in GB)	Number of DIMMs	DIMM Rank, Organization, and Frequency	DIMM Slot Population
64	8	8	2R, x8, 2400 MT/s, 2R, x8, 2133 MT/s, 2R, x8, 1866 MT/s	A1, A2, A3, A4, A5, A6, A7, A8
	16	4	2R, x8, 2400 MT/s, 2R, x8, 2133 MT/s, 2R, x8, 1866 MT/s	A1, A2, A3, A4
	32	2	2R, x8, 2400 MT/s, 2R, x8, 2133 MT/s, 2R, x8, 1866 MT/s	A1, A2
96	16	6	2R, x8, 2400 MT/s, 2R, x4, 2133 MT/s, 2R, x4, 1866 MT/s	A1, A2, A3, A4, A5, A6
	32	3	2R, x8, 2400 MT/s, 2R, x4, 2133 MT/s, 2R, x4, 1866 MT/s	A1, A2, A3
128	16	8	2R, x8, 2400 MT/s, 2R, x4, 2133 MT/s, 2R, x4, 1866 MT/s,	A1, A2, A3, A4, A5, A6, A7, A8
	32	4	2R, x8, 2400 MT/s, 2R, x4, 2133 MT/s, 2R, x4, 1866 MT/s,	A1, A2, A3, A4
192	32	6	2R, x4, 2400 MT/s 2R, x4, 2133 MT/s 2R, x4, 1866 MT/s	A1, A2, A3, A4, A5, A6
256	32	8	2R, x4, 2400 MT/s 2R, x4, 2133 MT/s 2R, x4, 1866 MT/s	A1, A2, A3, A4, A5, A6, A7, A8

Table 35. Memory configurations—two processors

System Capacity (in GB)	DIMM Size (in GB)	Number of DIMMs	DIMM Rank, Organization, and Frequency	DIMM Slot Population
8	4	2	1R, x8, 2400 MT/s, 1R, x8, 2133 MT/s, 1R, x8, 1866 MT/s	A1, B1
16	4	4	1R, x8, 2400 MT/s, 1R, x8, 2133 MT/s, 1R, x8, 1866 MT/s	A1, A2, B1, B2
	8	2	1R, x8, 2400 MT/s,	A1, B1

System Capacity (in GB)	DIMM Size (in GB)	Number of DIMMs	DIMM Rank, Organization, and Frequency	DIMM Slot Population
			1R, x8, 2133 MT/s, 1R, x8, 1866 MT/s	
24	4	6	1R, x8, 2400 MT/s, 1R, x8, 2133 MT/s, 1R, x8, 1866 MT/s	A1, A2, A3, B1, B2, B3
32	4	8	1R, x8, 2400 MT/s, 1R, x8, 2133 MT/s, 1R, x8, 1866 MT/s	A1, A2, A3, A4, B1, B2, B3, B4
	8	4	2R, x8, 2400 MT/s, 2R, x8, 2133 MT/s, 2R, x8, 1866 MT/s	A1, A2, B1, B2
	16	2	2R, x8, 2400 MT/s, 2R, x8, 2133 MT/s, 2R, x8, 1866 MT/s	A1, B1
48	4	12	2R, x8, 2400 MT/s, 2R, x8, 2133 MT/s, 2R, x8, 1866 MT/s	A1, A2, A3, A4, A5, A6, A7, A8, B1, B2, B3, B4
	8	6	2R, x8, 2400 MT/s, 2R, x8, 2133 MT/s, 2R, x8, 1866 MT/s	A1, A2, A3, B1, B2, B3
64	8	8	2R, x8, 2400 MT/s, 2R, x8, 2133 MT/s, 2R, x8, 1866 MT/s	A1, A2, A3, A4, B1, B2, B3, B4
	16	4	2R, x8, 2400 MT/s, 2R, x8, 2133 MT/s, 2R, x8, 1866 MT/s	A1, A2, B1, B2
	32	2	2R, x8, 2400 MT/s, 2R, x8, 2133 MT/s, 2R, x8, 1866 MT/s	A1, B1
96	8	12	2R, x8, 2400 MT/s, 2R, x8, 2133 MT/s, 2R, x8, 1866 MT/s	A1, A2, A3, A4, A5, A6,A7,A8, B1, B2, B3, B4
	16	6	2R, x8, 2400 MT/s, 2R, x8, 2133 MT/s, 2R, x8, 1866 MT/s	A1, A2, A3, B1, B2, B3
128	16	8	2R, x4, 2400 MT/s, 2R, x4, 2133 MT/s,	A1, A2, A3, A4, B1, B2, B3, B4

System Capacity (in GB)	DIMM Size (in GB)	Number of DIMMs	DIMM Rank, Organization, and Frequency	DIMM Slot Population
			2R, x4, 1866 MT/s	
	32	4	2R, x4, 2400 MT/s, 2R, x4, 2133 MT/s, 2R, x4, 1866 MT/s	A1, A2, B1, B2
160	16 and 8	12	2R, x4, 2400 MT/s, 2R, x8, 2400 MT/s, 2R, x4, 2133 MT/s, 2R, x8, 2133 MT/s, 2R, x4, 1866 MT/s 2R, x8, 1866 MT/s	A1, A2, A3, A4, A5, A6,A7,A8, B1, B2, B3, B4 **NOTE: 16 GB DIMMs must be installed in slots numbered A1, A2, A3, A4, B1, B2, B3, and B4 and 8 GB DIMMs must be installed in slots A5, A6, A7, and A8.**
192	16	12	2R, x4, 2400 MT/s, 2R, x4, 2133 MT/s, 2R, x4, 1866 MT/s	A1, A2, A3, A4, A5, A6,A7,A8, B1, B2, B3, B4
	32	6	2R, x4, 2400 MT/s 2R, x4, 2133 MT/s 2R, x4, 1866 MT/s	A1, A2, A3, B1, B2, B3
256	32	8	2R, x4, 2400 MT/s 2R, x4, 2133 MT/s 2R, x4, 1866 MT/s	A1, A2, A3, A4, B1, B2, B3, B4
384	32	12	2R, x4, 2400 MT/s 2R, x4, 2133 MT/s 2R, x4, 1866 MT/s	A1, A2, A3, A4, A5, A6, A7, A8, B1, B2, B3, B4

Removing memory modules

Prerequisites

CAUTION: Many repairs may only be done by a certified service technician. You should only perform troubleshooting and simple repairs as authorized in your product documentation, or as directed by the online or telephone service and support team. Damage due to servicing that is not authorized by Dell is not covered by your warranty. Read and follow the safety instructions that are shipped with your product.

1. Follow the safety guidelines listed in the Safety instructions section.
2. Follow the procedure listed in the Before working inside your system section.
3. Remove the cooling shroud.

   NOTE: If open, close the expansion card latch on the cooling shroud to release the full length card.
4. If connected, disconnect the cables from expansion card(s).
5. If installed, remove the expansion card riser.

NOTE: The memory modules are hot to touch for some time after the system has been powered down. Allow the memory modules to cool before handling them. Handle the memory modules by the card edges and avoid touching the components or metallic contacts on the memory module.

CAUTION: To ensure proper system cooling, memory module blanks must be installed in any memory socket that is not occupied. Remove memory module blanks only if you intend to install memory modules in those sockets.

Steps

1. Locate the appropriate memory module socket.

   CAUTION: Handle each memory module only by the card edges, ensuring not to touch the middle of the memory module or metallic contacts.

2. To release the memory module from the socket, simultaneously press the ejectors on both ends of the memory module socket.
3. Lift and remove the memory module from the system.

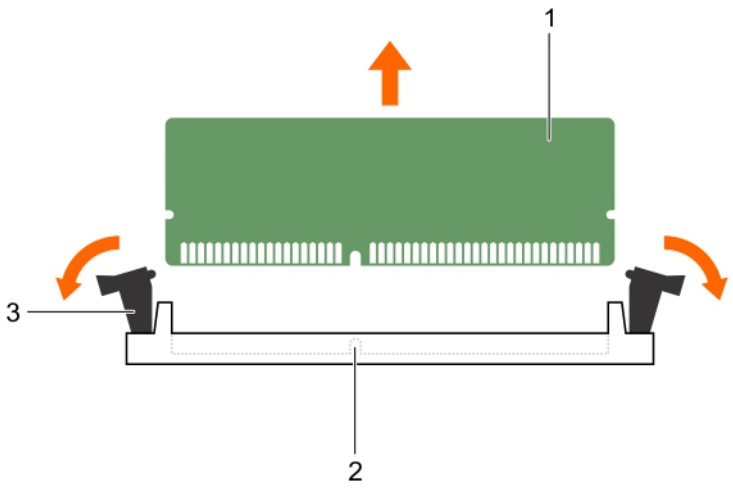

Figure 20. Removing the memory module

a. memory module
b. memory module socket
c. memory module socket ejector (2)

Next steps

1. Install the memory module.

   NOTE: If you are removing the memory module permanently, install a memory module blank.

2. If removed, install the PCIe expansion card riser.
3. If disconnected, reconnect the cables to the expansion card(s).
4. Install the cooling shroud.
5. If closed, open the expansion card latch on the cooling shroud to support the full length expansion card.
6. Follow the procedure listed in the After working inside your system section.

Related tasks

Before working inside your system
After working inside your system
Removing the optional expansion card riser
Removing an expansion card from the expansion card riser
Removing the cooling shroud
Installing memory modules
Installing an expansion card into the expansion card riser
Installing the optional expansion card riser
Installing the cooling shroud

Related reference

Safety instructions

Installing memory modules

Prerequisites

NOTE: The memory modules are hot to touch for some time after the system has been powered down. Allow the memory modules to cool before handling them. Handle the memory modules by the card edges and avoid touching the components or metallic contacts on the memory module.

CAUTION: Many repairs may only be done by a certified service technician. You should only perform troubleshooting and simple repairs as authorized in your product documentation, or as directed by the online or telephone service and support team. Damage due to servicing that is not authorized by Dell is not covered by your warranty. Read and follow the safety instructions that are shipped with your product.

1. Follow the safety guidelines listed in the Safety instructions section.
2. Follow the procedure listed in the Before working inside your system section.
3. If installed, remove the PCIe expansion card riser.

Steps

1. Locate the appropriate memory module socket.

   CAUTION: Handle each memory module only by the card edges, ensuring not to touch the middle of the memory module or metallic contacts.

2. Open the ejectors on the memory module socket outward to allow the memory module to be inserted into the socket.
3. Align the edge connector of the memory module with the alignment key of the memory module socket, and insert the memory module in the socket.

   CAUTION: Do not apply pressure at the center of the memory module; apply pressure at both ends of the memory module evenly.

   NOTE: The memory module socket has an alignment key that enables you to install the memory module in the socket in only one orientation.

4. Press the memory module with your thumbs until the socket levers firmly click into place.

   When the memory module is properly seated in the socket, the levers on the memory module socket align with the levers on the other sockets that have memory modules installed.

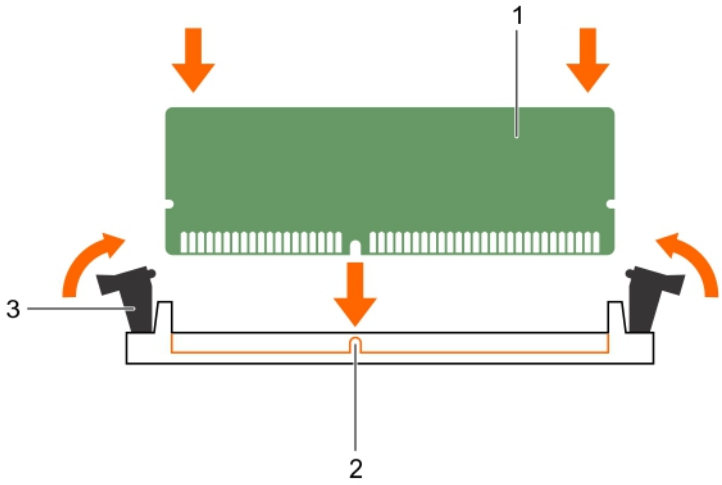

Figure 21. Installing the memory module

a. memory module
b. alignment key
c. memory module socket ejector (2)

Next steps

1. If removed, reinstall the PCIe expansion card riser.
2. Follow the procedure listed in the After working inside your system section.
3. Press F2 to enter System Setup, and check the **System Memory** setting.

   The system should have already changed the value to reflect the installed memory.
4. If the value is incorrect, one or more of the memory modules may not be installed properly. Ensure that the memory module is firmly seated in the memory module socket.
5. Run the system memory test in system diagnostics.

Related tasks

Before working inside your system
After working inside your system
Removing the optional expansion card riser
Removing an expansion card from the expansion card riser
Removing the cooling shroud
Installing an expansion card into the expansion card riser
Installing the optional expansion card riser
Installing the cooling shroud
Removing memory modules

Related reference

Safety instructions

Hard drives

Your system supports up to eight 3.5-inch or 2.5-inch hot-swappable hard drives or SSDs.

All hard drives connect to the system board through the hard drive backplane. Hot-swappable hard drives are supplied in hot-swappable hard drive carriers that fit in the hard drive slots.

CAUTION: Before attempting to remove or install a hard drive while the system is running, see the documentation for the storage controller card to ensure that the host adapter is configured correctly to support hot-swap hard drive removal and insertion.

CAUTION: Do not turn off or reboot your system while the hard drive is being formatted. Doing so can cause a hard drive failure.

NOTE: Use only hard drives that have been tested and approved for use with the hard drive backplane.

When you format a hard drive, allow enough of time for the formatting to be completed. Be aware that high-capacity hard drives can take a long time to format.

Removing a hot swappable hard drive or SSD

Prerequisites

CAUTION: Many repairs may only be done by a certified service technician. You should only perform troubleshooting and simple repairs as authorized in your product documentation, or as directed by the online or telephone service and support team. Damage due to servicing that is not authorized by Dell is not covered by your warranty. Read and follow the safety instructions that came with the product.

1. Follow the safety guidelines listed in the Safety instructions section.
2. Follow the procedure listed in the Before working inside your system section.
3. If applicable, remove the bezel.
4. Using the management software, prepare the hard drive for removal. If the hard drive is online, the green activity or fault indicator flashes while the drive is turning off. When the hard drive indicators are off, the hard drive is ready for removal.

   For more information, see the documentation for the storage controller.

CAUTION: To prevent data loss, ensure that your operating system supports hot-swap drive installation. See the documentation supplied with your operating system.

Steps

1. Press the release button to open the hard drive or SSD carrier release handle.
2. Slide the hard drive carrier or SSD out of the hard drive slot.

   CAUTION: To maintain proper system cooling, all empty hard drive or SSD slots must have hard drive or SSD blanks installed.
3. If you are not replacing the hard drive or SSD immediately, insert a hard drive or SSD blank in the empty hard drive slot.

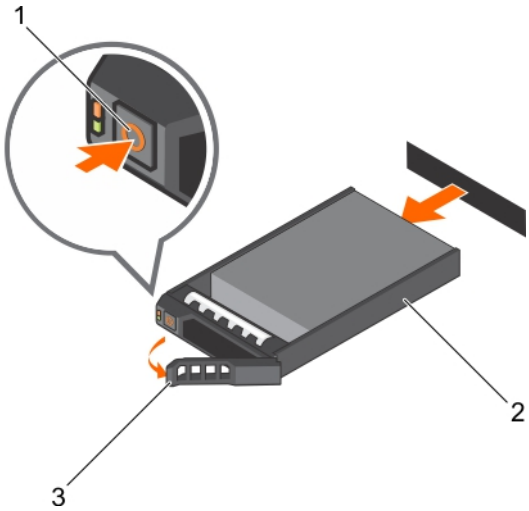

Figure 22. Removing a hot swappable hard drive or SSD

a. release button
b. hard drive or SSD carrier

c. hard drive or SSD carrier handle

Related tasks

Removing the optional front bezel
Installing the optional front bezel

Related reference

Safety instructions

Installing a hot-swap hard drive

Prerequisites

CAUTION: Many repairs may only be done by a certified service technician. You should only perform troubleshooting and simple repairs as authorized in your product documentation, or as directed by the online or telephone service and support team. Damage due to servicing that is not authorized by Dell is not covered by your warranty. Read and follow the safety instructions that are shipped with your product.

CAUTION: Use only hard drives that have been tested and approved for use with the hard drive backplane.

CAUTION: When installing a hard drive, ensure that the adjacent drives are fully installed. Inserting a hard drive carrier and attempting to lock its handle next to a partially installed carrier can damage the partially installed carrier's shield spring and make it unusable.

CAUTION: Combining SAS and SATA hard drives in the same RAID volume is not supported.

CAUTION: To prevent data loss, ensure that your operating system supports hot-swap drive installation. See the documentation supplied with your operating system.

CAUTION: When a replacement hot swappable hard drive is installed and the system is powered on, the hard drive automatically begins to rebuild. Make absolutely sure that the replacement hard drive is blank or contains data that you wish to have over-written. Any data on the replacement hard drive is immediately lost after the hard drive is installed.

Steps

1. If a hard drive blank is installed in the hard drive slot, remove it.
2. Install a hard drive in the hard drive carrier.
3. Press the release button on the front of the hard drive carrier and open the hard drive carrier handle.
4. Insert the hard drive carrier into the hard drive slot until the carrier connects with the backplane.
5. Close the hard drive carrier handle to lock the hard drive in place.

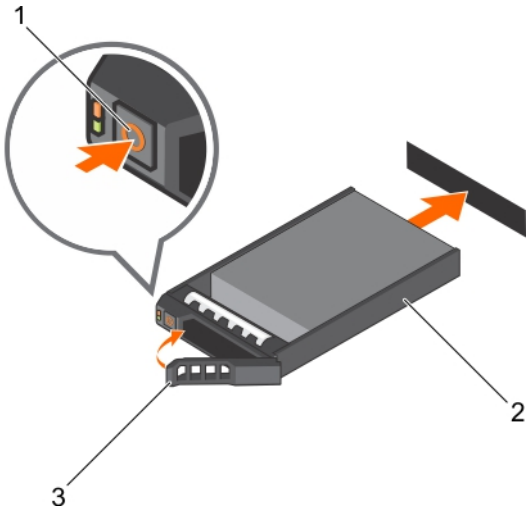

Figure 23. Installing a hot-swappable hard drive or SSD

a. release button
b. hard drive or SSD carrier
c. hard drive or SSD carrier handle

Related tasks

Removing the optional front bezel
Installing the optional front bezel

Related reference

Safety instructions

Removing a 3.5-inch hard drive blank

Prerequisites

CAUTION: Many repairs may only be done by a certified service technician. You should only perform troubleshooting and simple repairs as authorized in your product documentation, or as directed by the online or telephone service and support team. Damage due to servicing that is not authorized by Dell is not covered by your warranty. Read and follow the safety instructions that came with the product.

CAUTION: To maintain proper system cooling, all empty hard drive slots must have hard drive blanks installed.

1. Follow the safety guidelines listed in the Safety instructions section.
2. If installed, remove the front bezel.

Steps

Press the release button and slide the blank out of the hard drive slot.

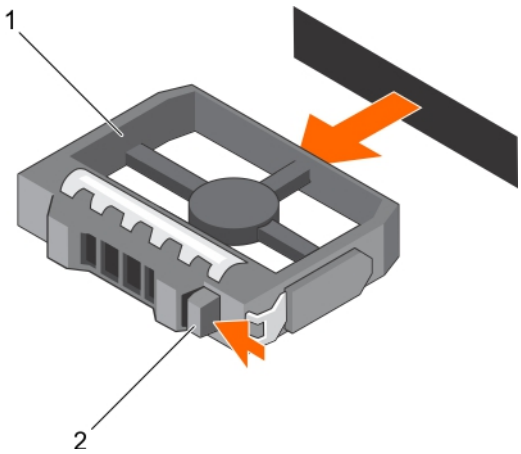

Figure 24. Removing a 3.5-inch hard drive blank

a. hard drive blank
b. release button

Next steps

If applicable, install the front bezel.

Related tasks

Removing the optional front bezel
Installing the optional front bezel

Related reference

Safety instructions

Installing a 3.5-inch hard drive blank

Prerequisites

1. Follow the safety guidelines listed in the Safety instructions section.
2. If installed, remove the front bezel.

Steps

Insert the hard drive blank into the hard drive slot until the release button clicks into place.

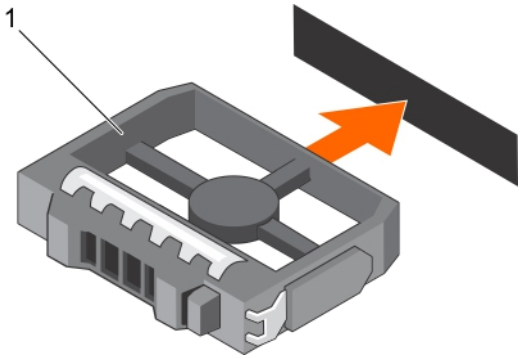

Figure 25. Installing a 3.5-inch hard drive blank

a. hard drive blank

Next steps

If applicable, install the front bezel.

Related tasks

Removing the optional front bezel
Installing the optional front bezel

Related reference

Safety instructions

Removing a 2.5-inch hot swappable hard drive from a 3.5-inch hard drive adapter

Prerequisites

CAUTION: Many repairs may only be done by a certified service technician. You should only perform troubleshooting and simple repairs as authorized in your product documentation, or as directed by the online or telephone service and support team. Damage due to servicing that is not authorized by Dell is not covered by your warranty. Read and follow the safety instructions that came with the product.

1. Follow the safety guidelines listed in the Safety instructions section.
2. Keep the Phillips #2 screwdriver ready.
3. Remove the 3.5-inch hard drive adapter from the 3.5-inch hot swappable hard drive carrier.

NOTE: A 2.5-inch hot swappable hard drive is installed in a 3.5-inch hard drive adapter, which is then installed in the 3.5-inch hot swappable hard drive carrier.

Steps

1. Remove the screws from the side of the 3.5-inch hard drive adapter.
2. Remove the 2.5-inch hot swappable hard drive from the 3.5-inch hard drive adapter.

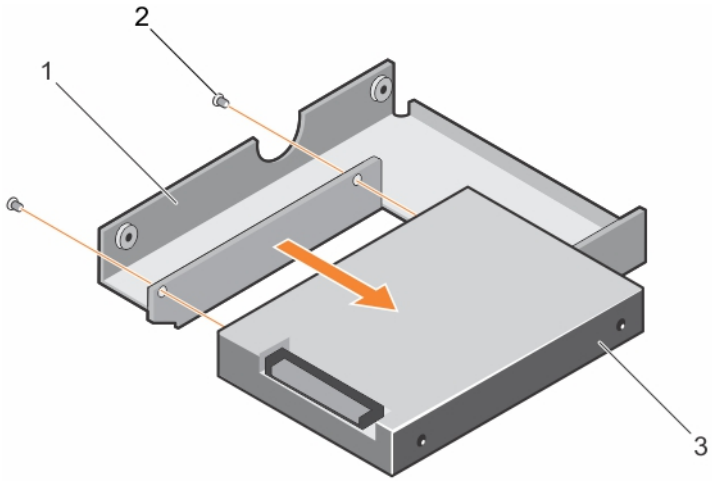

Figure 26. Removing 2.5-inch hot swappable hard drive from a 3.5-inch hard drive adapter

a. 3.5-inch hard drive adapter
b. screw (2)
c. 2.5-inch hot swappable hard drive

Related tasks

Removing the optional front bezel
Installing the optional front bezel

Related reference

Safety instructions

Installing a 2.5-inch hot swappable hard drive into a 3.5-inch hard drive adapter

Prerequisites

CAUTION: Many repairs may only be done by a certified service technician. You should only perform troubleshooting and simple repairs as authorized in your product documentation, or as directed by the online or telephone service and support team. Damage due to servicing that is not authorized by Dell is not covered by your warranty. Read and follow the safety instructions that are shipped with your product.

1. Follow the safety guidelines listed in the Safety instructions section.
2. Keep the Phillips #2 screwdriver ready.

Steps

1. Align the screw holes on the 2.5-inch hot swappable hard drive with the screw holes on the 3.5-inch hard drive adapter.
2. Install the screws to secure the 2.5-inch hot swappable hard drive to the 3.5-inch hard drive adapter.

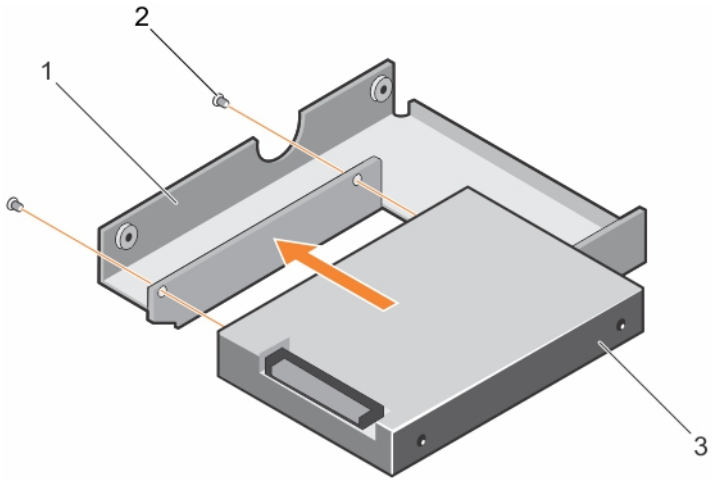

Figure 27. Installing a 2.5-inch hot swappable hard drive into a 3.5-inch hard drive adapter

a. 3.5-inch hard drive adapter
b. screw (2)
c. 2.5-inch hard drive

Next steps

Install the 3.5-inch adapter into the 3.5-inch hot swappable hard drive carrier.

Related tasks

Removing the optional front bezel
Installing the optional front bezel

Related reference

Safety instructions

Removing a 3.5-inch hot swappable hard drive adapter from a 3.5-inch hot swappable hard drive carrier

Prerequisites

CAUTION: Many repairs may only be done by a certified service technician. You should only perform troubleshooting and simple repairs as authorized in your product documentation, or as directed by the online or telephone service and support team. Damage due to servicing that is not authorized by Dell is not covered by your warranty. Read and follow the safety instructions that are shipped with your product.

1. Follow the safety guidelines listed in safety instructions section.
2. Keep the Phillips #2 screwdriver ready.
3. If installed, remove the front bezel.

Steps

1. Remove the 3.5-inch hot swappable hard drive carrier from the system.
2. Remove the screws from the rails on the hot swappable hard drive carrier.
3. Lift the 3.5-inch hard drive adapter out of the 3.5-inch hot swappable hard drive carrier.

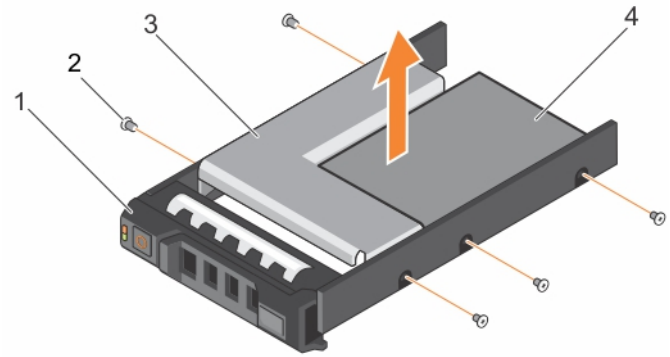

Figure 28. Removing a 3.5-inch hot swappable hard drive adapter from a 3.5-inch hot swappable hard drive carrier

1. 3.5-inch hard drive carrier
2. screw (5)
3. hard drive adapter
4. 2.5-inch hard drive

Next steps

If removed, install the front bezel.

Related reference

Safety instructions

Installing a 3.5-inch hard drive adapter into the 3.5-inch hot swappable hard drive carrier

Prerequisites

CAUTION: Many repairs may only be done by a certified service technician. You should only perform troubleshooting and simple repairs as authorized in your product documentation, or as directed by the online or telephone service and support team. Damage due to servicing that is not authorized by Dell is not covered by your warranty. Read and follow the safety instructions that are shipped with your product.

1. Follow the safety guidelines listed in the Safety instructions section.
2. Keep the Phillips #2 screwdriver ready.
3. Install the 2.5-inch hot swappable hard drive into the 3.5-inch hard drive adapter.

Steps

1. Insert the 3.5-inch hard drive adapter into the 3.5-inch hot swappable hard drive carrier with the connector end of the hard drive toward the back of the 3.5-inch hot swappable hard drive carrier.
2. Align the screw holes on the 3.5-inch hard drive adapter and the 3.5-inch hard drive with the holes on the 3.5-inch hot swappable hard drive carrier.
3. Install the screws to secure the 3.5-inch hard drive adapter to the 3.5-inch hot swappable hard drive carrier.

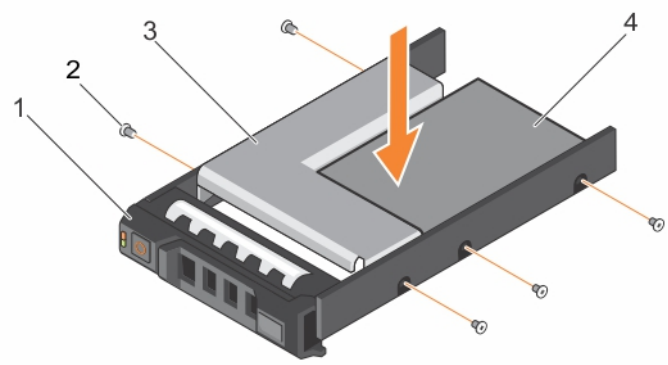

Figure 29. Installing a 3.5-inch hard drive adapter into a hot swappable hard drive carrier

1. 3.5-inch hot swappable hard drive carrier
2. screw (5)
3. hard drive adapter
4. 2.5-inch hard drive

Next steps

Install the 3.5-inch hot swappable hard drive carrier into the system.

Related reference

Safety instructions

Removing a hard drive from a hard drive carrier

Prerequisites

1. Keep the Phillips #1 screwdriver ready.
2. Remove the hot swappable hard drive carrier from the system.

Steps

1. Remove the screws from the slide rails on the hard drive carrier.
2. Lift the hard drive out of the hard drive carrier.

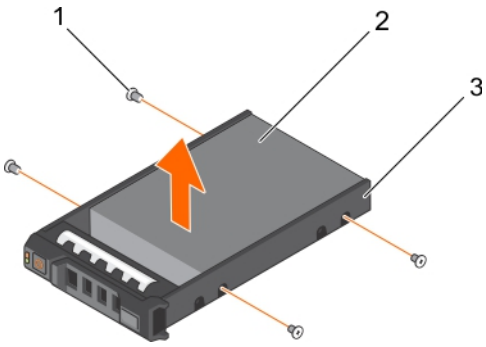

Figure 30. Removing a hard drive into a hard drive carrier

a. screw (4)
b. hard drive
c. hard drive carrier

Installing a hard drive into a hard drive carrier

Prerequisites

CAUTION: Many repairs may only be done by a certified service technician. You should only perform troubleshooting and simple repairs as authorized in your product documentation, or as directed by the online or telephone service and support team. Damage due to servicing that is not authorized by Dell is not covered by your warranty. Read and follow the safety instructions that are shipped with your product.

Steps

1. Insert the hard drive into the hard drive carrier with the connector end of the hard drive toward the back of the carrier.
2. Align the screw holes on the hard drive with the screws holes on the hard drive carrier.
   When aligned correctly, the back of the hard drive is flush with the back of the hard drive carrier.
3. Attach the screws to secure the hard drive to the hard drive carrier.

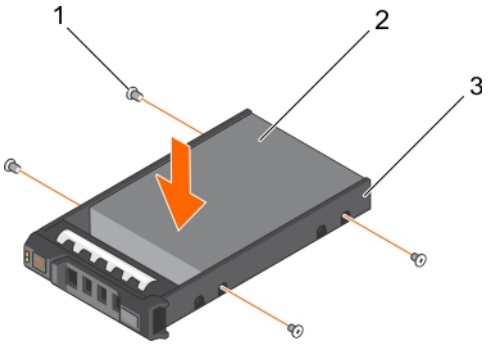

Figure 31. Installing a hard drive into a hard drive carrier

a. screw (4)
b. hard drive
c. hard drive carrier

Next steps

Install the hot swappable hard drive carrier.

Optical drive (optional)

Optical drives retrieve and store data on optical discs such as CD and DVD. Optical drives can be categorized into two basic types: optical disc readers and optical disc writers.

Removing the optional optical drive

Prerequisites

CAUTION: Many repairs may only be done by a certified service technician. You should only perform troubleshooting and simple repairs as authorized in your product documentation, or as directed by the online or telephone service and support team. Damage due to servicing that is not authorized by Dell is not covered by your warranty. Read and follow the safety instructions that are shipped with your product.

1. Follow the safety guidelines listed in the Safety instructions section.
2. Follow the procedure listed in the Before working inside your system section.

Steps

1. Disconnect the power and data cable from the back of the drive.

NOTE: Ensure that you note the routing of the power and data cable on the side of the system as you remove them from the system board and drive. Route these cables properly when you replace them to prevent them from being pinched or crimped.

2. To release the optical drive, press the release tab.
3. Slide the optical drive out of the system until it is free of the optical drive slot.
4. If you are not adding a new optical drive, install the optical drive blank.

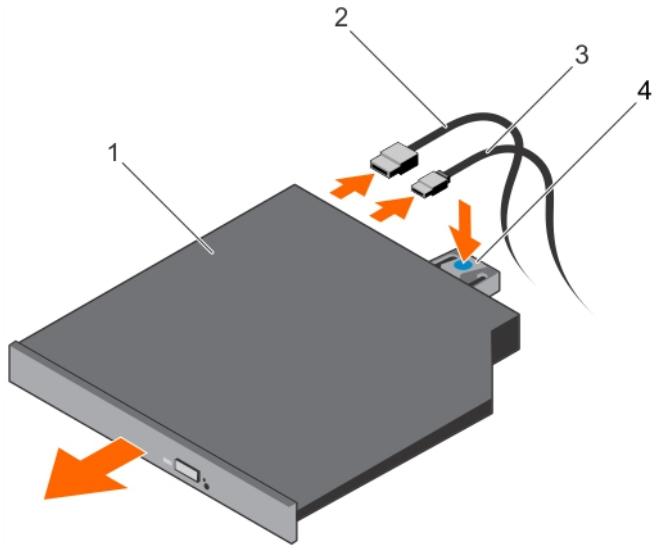

Figure 32. Removing the optical drive

1. optical drive
2. data cable
3. power cable
4. release tab

Next steps

1. Install the optional front bezel
2. Follow the procedure listed in the After working inside your system section.

Related tasks

Before working inside your system
After working inside your system

Related reference

Safety instructions

Installing the optional optical drive

Prerequisites

CAUTION: Many repairs may only be done by a certified service technician. You should only perform troubleshooting and simple repairs as authorized in your product documentation, or as directed by the online or telephone service and support team. Damage due to servicing that is not authorized by Dell is not covered by your warranty. Read and follow the safety instructions that are shipped with your product.

1. Follow the safety guidelines listed in the Safety instructions section.
2. Follow the procedure listed in the Before working inside your system section.

Steps

1. If installed, remove the optical drive blank, and then press the blue release tab at the back of the blank and push the blank out of the system.

2. Align the optical drive with the optical drive slot on the front of the chassis.
3. Slide the optical drive into the slot until the latch snaps into place.
4. Connect the power and data cable to the back of the drive.
5. Route the power and data cable through the cable routing guides on the system chassis.

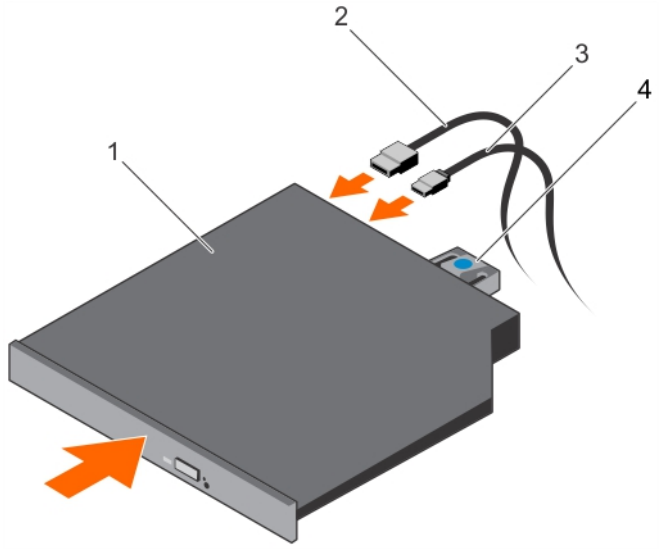

Figure 33. Installing the optical drive

1. optical drive
2. data cable
3. power cable
4. release tab

Next steps

1. Follow the procedure listed in the After working inside your system section.

Related tasks

Before working inside your system
After working inside your system

Related reference

Safety instructions

Cooling fans

Your system supports five cooling fans. A fan blank is pre-installed on the first cooling fan slot (FAN1).

NOTE: Hot-swap removal or installation of the fans is not supported.

NOTE: Each fan is listed in the systems management software, referenced by the respective fan number. If there is a problem with a particular fan, you can easily identify and replace the proper fan by noting the fan numbers on the cooling fan assembly.

The following table lists the fan configuration which shows the various fan configurations based on the processor configuration in the system.

Table 36. Fan configuration table

Processor Type	CPU 1	CPU 2	PSU Type	FAN1	FAN2	FAN3	FAN4	FAN5	FAN6
55 W-120 W	Y	N	Redundant / Cabled	N	Y	Y	Y	Y	N
	Y	Y	Redundant / Cabled	N	Y	Y	Y	Y	Y

Removing a cooling fan

Prerequisites

NOTE: Opening or removing the system cover when the system is ON may expose you to a risk of electric shock. Exercise utmost care while removing or installing cooling fans.

CAUTION: Many repairs may only be done by a certified service technician. You should only perform troubleshooting and simple repairs as authorized in your product documentation, or as directed by the online or telephone service and support team. Damage due to servicing that is not authorized by Dell is not covered by your warranty. Read and follow the safety instructions that are shipped with your product.

NOTE: The procedure for removing each cooling fan is the same.

1. Follow the safety guidelines listed in the Safety instructions section.
2. Follow the procedure listed in the Before working inside your system section.
3. If applicable, remove the expansion card riser.

   NOTE: If applicable, close the expansion card latch on the cooling shroud to release the full length card.
4. Remove the cooling shroud.

Steps

1. Remove the fan cable connector from the system board by pressing the release tab on the system board end of the connector, and lifting it away from the system board.
2. Release the cable from the cable holders on the fan bracket.
3. Press the release tab on the cooling fan and lift the fan away from the chassis.

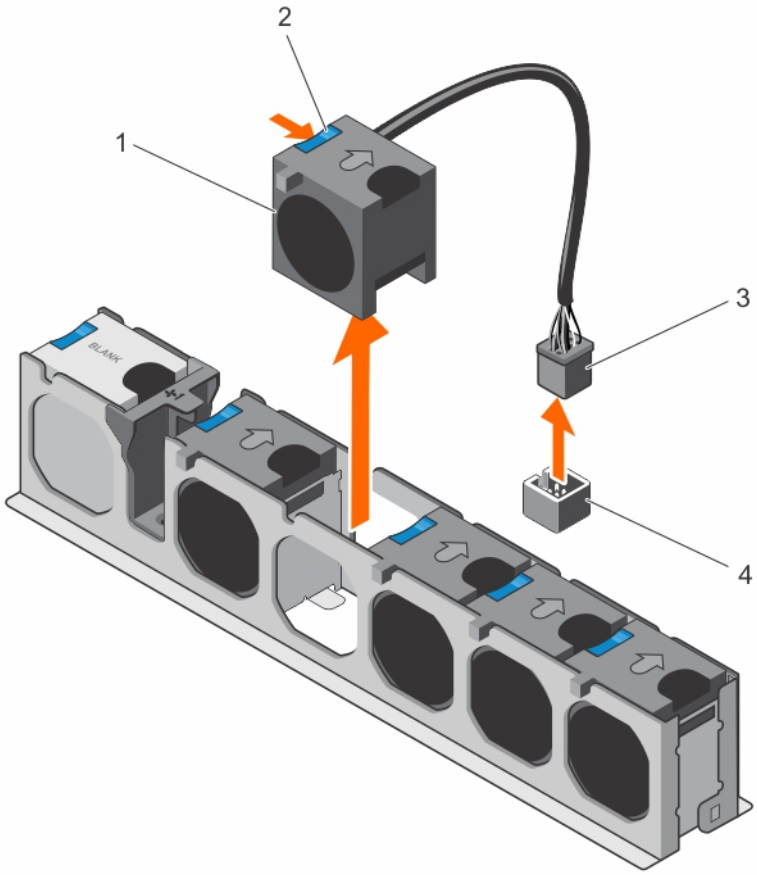

Figure 34. Removing a cooling fan

1. cooling fans (5)
2. cooling fan release tab
3. cooling fan cable connector
4. cooling fan connector on the system board

Next steps

1. If applicable, install the PCIe expansion card riser.
2. Reinstall the cooling shroud.
3. Follow the procedure listed in the After working inside your system section.

Related tasks

Before working inside your system
After working inside your system

Related reference

Safety instructions

Installing a cooling fan

Prerequisites

CAUTION: Many repairs may only be done by a certified service technician. You should only perform troubleshooting and simple repairs as authorized in your product documentation, or as directed by the online or telephone service and support team. Damage due to servicing that is not authorized by Dell is not covered by your warranty. Read and follow the safety instructions that are shipped with your product.

1. Follow the safety guidelines listed in the Safety instructions section.
2. Follow the procedure listed in the Before working inside your system section.

Steps

1. Align the fan with the cable end of the fan toward the system board connector .
2. Lower the fan into the fan bracket until it clicks into position.
3. Connect the fan power cable to the corresponding power connector on the system board .
4. Route the cable through the cable holders on the fan bracket.

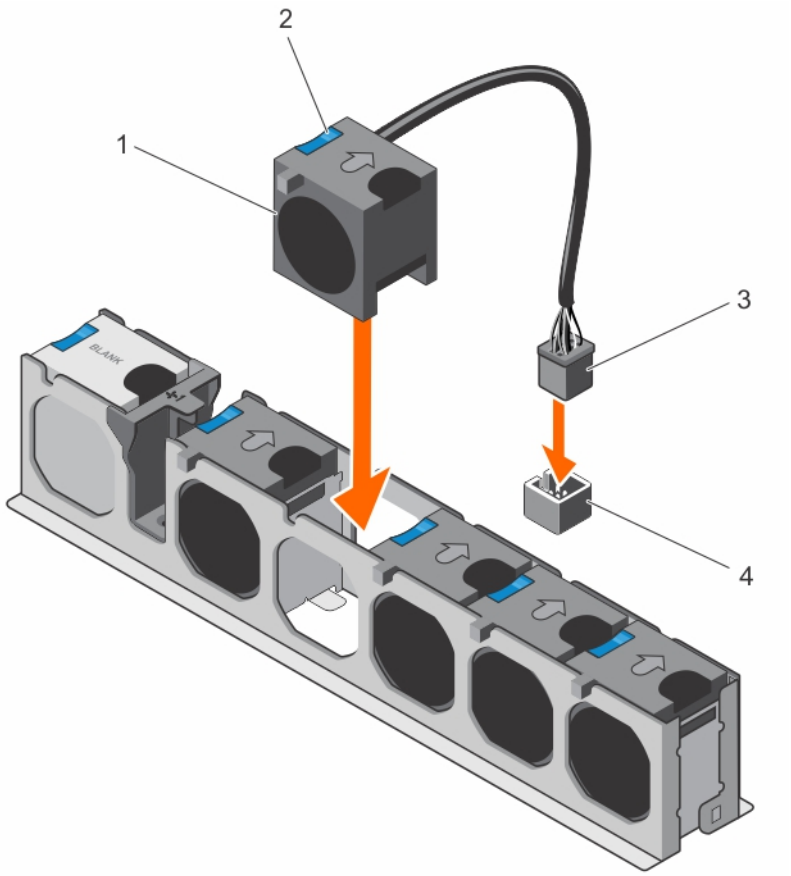

Figure 35. Installing the cooling fan

1. cooling fans (5)
2. cooling fan release tab
3. cooling fan cable connector
4. cooling fan connector on the system board

Next steps

Follow the procedure listed in the After working inside your system section.

Related tasks

Before working inside your system
After working inside your system

Related reference

Safety instructions

Internal USB memory key (optional)

An optional USB memory key installed inside your system can be used as a boot device, security key, or mass storage device.

To boot from the USB memory key, configure the USB memory key with a boot image and then specify the USB memory key in the boot sequence in System Setup.

The internal USB port must be enabled in **Internal USB Port** option in the **Integrated Devices** screen of **System Setup**.

NOTE: To locate the internal USB port (INT_USB) on the system board, see the System board jumpers and connectors section.

Related reference

System board connectors

Replacing the optional internal USB memory key

Prerequisites

CAUTION: Many repairs may only be done by a certified service technician. You should only perform troubleshooting and simple repairs as authorized in your product documentation, or as directed by the online or telephone service and support team. Damage due to servicing that is not authorized by Dell is not covered by your warranty. Read and follow the safety instructions that are shipped with your product.

1. Follow the safety guidelines listed in the Safety instructions section.
2. Follow the procedure listed in the Before working inside your system section.

Steps

1. Locate the USB port or USB memory key on the system board.
   To locate the USB port, see the System board jumpers and connectors section.
2. If installed, remove the USB memory key from the USB port.

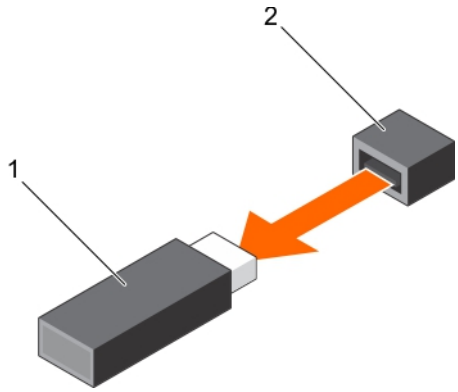

Figure 36. Removing the internal USB memory key

a. USB memory key
b. USB port

3. Insert the replacement USB memory key into the USB port.

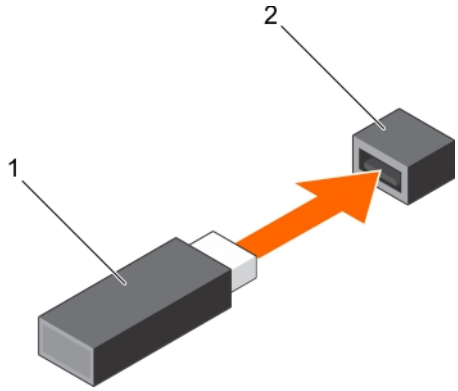

Figure 37. Installing the internal USB memory key

a. USB memory key
b. USB port

Next steps

1. Follow the procedure listed in the After working inside your system section.
2. While booting, press F2 to enter System Setup and verify that the system detects the USB memory key.

Related tasks

Before working inside your system
After working inside your system
Removing the optional expansion card riser
Removing an expansion card from the expansion card riser
Removing the cooling shroud
Installing an expansion card into the expansion card riser
Installing the optional expansion card riser
Installing the cooling shroud

Related reference

Safety instructions
System board connectors

Expansion cards and expansion card riser

An expansion card in the server is an add-on card that can be inserted into an expansion slot on the system board or riser card to add enhanced functionality to the system through the expansion bus.

NOTE: A System Event Log (SEL) event is logged if an expansion card riser is unsupported or missing. It does not prevent your system from turning on and no BIOS POST message or F1/F2 pause is displayed.

Expansion card installation guidelines

Your system supports PCI Express Generation 2 and Generation 3 expansion cards.

Use the following table as a guide for installing expansion cards to ensure proper cooling and mechanical fit. The expansion cards with the highest priority must be installed first using the slot priority indicated. All other expansion cards must be installed in card priority and slot priority order.

Table 37. Expansion card slots available on system board only

Location	PCIe slot	Processor connection	Height	Length	Link width	Slot width
System board	1	Processor 2	Low profile	Half length	x8	x8
System board	2	Processor 1	Low profile	Half length	x16	x16
System board	3	Processor 1	Low profile	Half length	x16	x16
System board	4	Platform Controller Hub (Mapped to Processor 1)	Low profile	Half length	x1	x1
System board	5	Platform Controller Hub (Mapped to Processor 1)	Low profile	Half length	x4	x8

Table 38. Expansion card slots available on system board and optional expansion card riser

Location	PCIe slot	Processor connection	Height	Length	Link width	Slot width
Expansion card riser	1	Processor 1	Full height	Full length	x16	x16
Expansion card riser	2	Processor 1	Full height	Half length	x8	x8
System board	3	Processor 1	Low profile	Half length	x16	x16
System board	4	Platform Controller Hub (Mapped to Processor 1)	Low profile	Half length	x1	x1
System board	5	Platform Controller Hub (Mapped to Processor 1)	Low profile	Half length	x4	x8

NOTE: The optional expansion card riser is installed on PCIe slot 2 on the system board.

NOTE: When your system is installed with the optional expansion card riser in PCIe slot 2 on the system board, you cannot install an expansion card in PCIe slot 1 of the system board.

NOTE: When x16 card installed in PCIe Slot 1 on expansion card riser the PCIe Slot 2 on the expansion card will not function. The expansion card riser can be used only with two x8 PCIe cards or with one x16 PCIe card on PCIE slot 1.

NOTE: Only slots 1, 2 and 3 support Generation 3 PCIe expansion cards.

NOTE: The expansion cards are not hot-swap.

Table 39. Expansion card installation priority on system board only

Card Priority	Category	Slot Priority	Max Allowed
1	RAID integrated storage	Integrated Slot	1
	RAID external storage	3,2,1	3
2	40G NICs	3,2,1	3
3	FC16 HBA	3,2,1	3
4	10Gb NICs	3,2,1,5	4
5	FC8 HBA	3,2,1,5	4
6	1Gb NICs (Broadcom Dual port)	3,2,1,5,4	5
	1Gb NICs	3,2,1,5	4
7	Non-RAID	3,2,1	3

Table 40. Expansion card installation priority on system board and optional expansion card riser

Card Priority	Category	Slot Priority	Max Allowed
1	RAID Integrated storage	Integrated Slot	1
2	RAID External storage (Low profile)	3	1
	RAID External storage (Full height)	2,1	2
3	40G NICs (Low profile)	3	1
	40G NICs (Full height)	2,1	2
4	FC16 HBA (Low profile)	3	1
	FC16 HBA (Full height)	2,1	2
5	10Gb NICs (Low profile)	3,5	2
	10Gb NICs (Full height)	2,1	2
6	FC8 HBA (Low profile)	3,5	2
	FC8 HBA (Full height)	2,1	2
7	1Gb NICs (Low profile) (Broadcom Dual port)	3,5,4	3
	1Gb NICs (Low profile)	3,5	2
	1Gb NICs (Full height)	2,1	2
8	Non-RAID (Low profile)	3	1
	Non-RAID (Full height)	2,1	2

Removing an expansion card from the system board

Prerequisites

1. Follow the safety guidelines listed in the Safety instructions section.

2. Follow the procedure listed in the Before working inside your system section.

CAUTION: Many repairs may only be done by a certified service technician. You should only perform troubleshooting and simple repairs as authorized in your product documentation, or as directed by the online or telephone service and support team. Damage due to servicing that is not authorized by Dell is not covered by your warranty. Read and follow the safety instructions that are shipped with your product.

Steps

1. If connected, disconnect the cables from the expansion card.
2. Pull the expansion card retention latch lock and lift the latch up to open the expansion card retention latch.
3. Hold the expansion card by its edge, pull the card up to remove it from the expansion card connector and out of the system.
4. If the expansion card is not going to be replaced, install a filler bracket by performing the following steps:
   a) Align the slot on the filler bracket with the tab on the expansion card slot.
   b) Press the expansion card latch till the filler bracket locks into place.

   NOTE: Filler brackets must be installed over empty expansion card slots to maintain FCC certification of the system. The brackets also keep dust and dirt out of the system and aid in proper cooling and airflow inside the system.

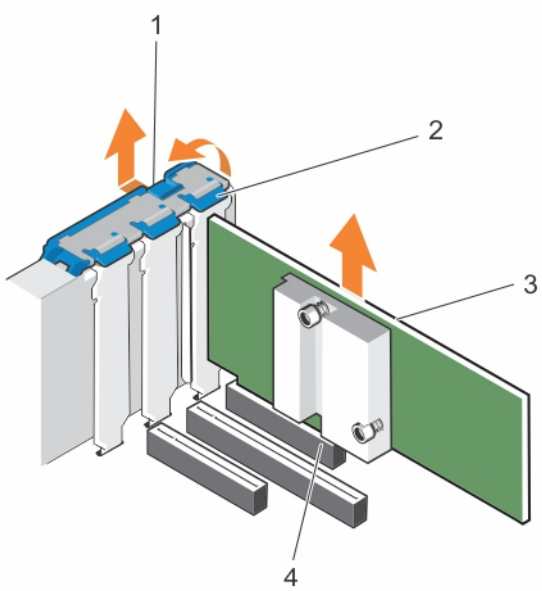

Figure 38. Removing an expansion card from the system board

1. expansion card retention latch lock
2. expansion card retention latch
3. expansion card
4. expansion card connector

Next steps

1. If disconnected, reconnect the cables to the expansion card.
2. Follow the procedure listed in the After working inside your system section.

Related tasks

Before working inside your system
After working inside your system

Related reference

Safety instructions

Installing an expansion card on the system board

Prerequisites

1. Follow the safety guidelines listed in the Safety instructions section.
2. Follow the procedure listed in the Before working inside your system section.

CAUTION: Many repairs may only be done by a certified service technician. You should only perform troubleshooting and simple repairs as authorized in your product documentation, or as directed by the online or telephone service and support team. Damage due to servicing that is not authorized by Dell is not covered by your warranty. Read and follow the safety instructions that are shipped with your product.

Steps

1. Unpack the expansion card and prepare it for installation.
   For instructions, see the documentation accompanying the card.
2. Open the expansion card retention latch.
3. If you are installing a new card, remove the filler bracket.

   NOTE: Store the filler bracket for future use. Filler brackets must be installed in empty expansion card slots to maintain FCC certification of the system. The brackets also keep dust and dirt out of the system and aid in proper cooling and airflow inside the system.
4. Holding the card by its edges, position the card so that the card's edge connector aligns with the expansion card connector.
5. Insert the card's edge connector firmly into the expansion card connector until the card is fully seated.
6. Close the expansion card retention latch by pushing the latch down until the latch snaps into place.
7. Connect the required cables to the expansion card.

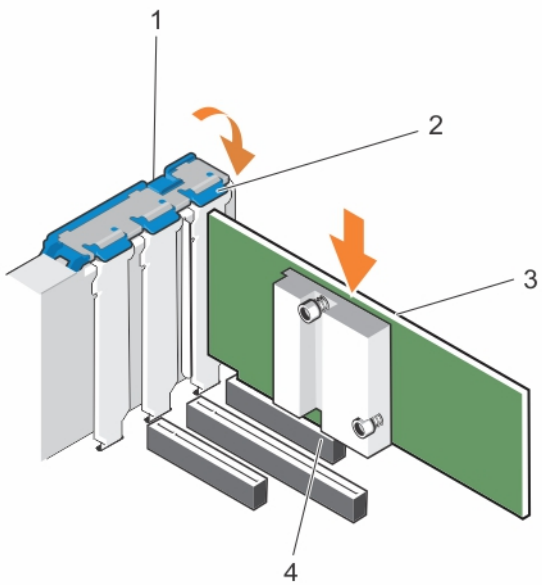

Figure 39. Installing an expansion card

1. expansion card retention latch lock
2. expansion card retention latch
3. expansion card
4. expansion card connector

Next steps

Follow the procedure listed in the After working inside your system section.

Related tasks

Before working inside your system
After working inside your system
Removing the cooling shroud

Installing an expansion card into the expansion card riser
Installing the optional expansion card riser

Related reference

Safety instructions

Removing the optional expansion card riser

Prerequisites

CAUTION: Many repairs may only be done by a certified service technician. You should only perform troubleshooting and simple repairs as authorized in your product documentation, or as directed by the online or telephone service and support team. Damage due to servicing that is not authorized by Dell is not covered by your warranty. Read and follow the safety instructions that are shipped with your product.

1. Follow the safety guidelines listed in the Safety instructions section.
2. Follow the procedure listed in the Before working inside your system section.
3. Remove the cooling shroud.

Steps

Holding the touch points, lift the expansion card riser from the riser connector on the system board.

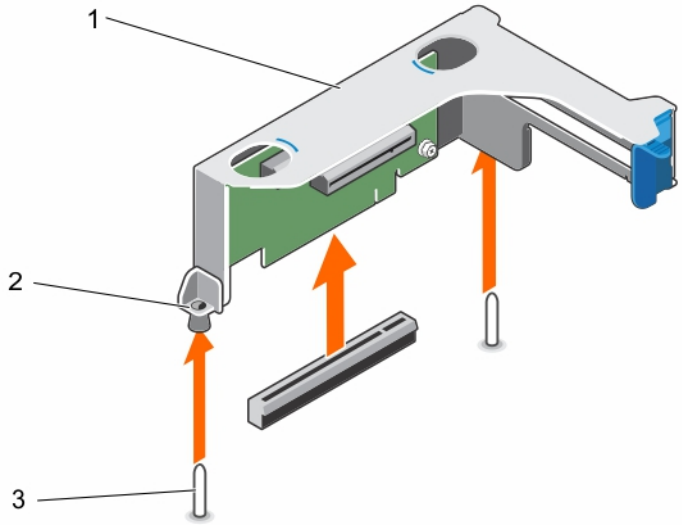

Figure 40. Removing the expansion card riser

a. expansion card riser cage
b. riser guide on riser cage
c. riser guide on chassis

Next steps

1. If applicable, install an expansion card on the riser.
2. If applicable, reinstall the expansion card riser.
3. Install the cooling shroud.
4. Follow the procedure listed in the After working inside your system section.

Related tasks

Before working inside your system
After working inside your system
Removing the cooling shroud
Installing an expansion card into the expansion card riser
Installing the optional expansion card riser

Related reference

Safety instructions

Installing the optional expansion card riser

Prerequisites

1. Follow the safety guidelines listed in the Safety instructions section.
2. Follow the procedure listed in the Before working inside your system section.
3. If applicable, reinstall the expansion card(s) into the expansion card riser.

CAUTION: Many repairs may only be done by a certified service technician. You should only perform troubleshooting and simple repairs as authorized in your product documentation, or as directed by the online or telephone service and support team. Damage due to servicing that is not authorized by Dell is not covered by your warranty. Read and follow the safety instructions that are shipped with your product.

Steps

1. Align the expansion card riser with the PCIe connector on the system board and the riser guides on the system board and chassis.
2. Lower the expansion card riser into place until the expansion card riser is fully seated in the connector.

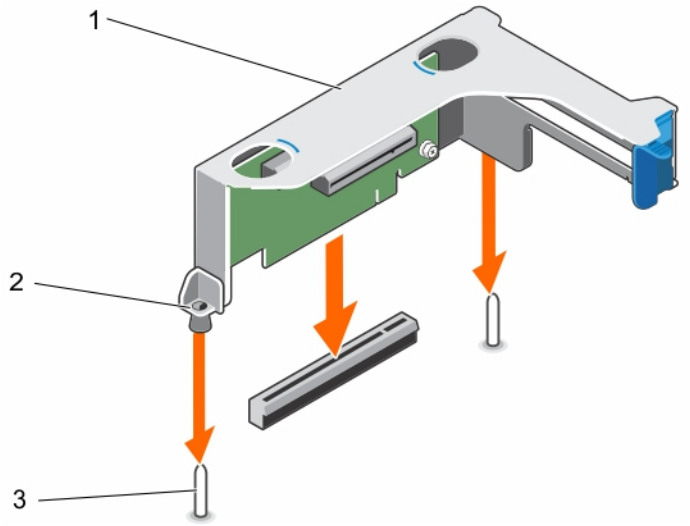

Figure 41. Installing the optional expansion card riser

a. expansion card riser cage
b. riser guide on riser cage
c. riser guide on chassis

Next steps

1. Follow the procedure listed in the After working inside your system section.
2. Install any device drivers required for the expansion-card as described in the documentation for the card.

Related tasks

Before working inside your system
After working inside your system
Installing an expansion card into the expansion card riser

Related reference

Safety instructions

Removing an expansion card from the expansion card riser

Prerequisites

CAUTION: Many repairs may only be done by a certified service technician. You should only perform troubleshooting and simple repairs as authorized in your product documentation, or as directed by the online or telephone service and support team. Damage due to servicing that is not authorized by Dell is not covered by your warranty. Read and follow the safety instructions that are shipped with your product.

1. Follow the safety guidelines listed in the Safety instructions section.
2. Follow the procedure listed in the Before working inside your system section.
3. Disconnect any cables connected to the expansion card.
4. Remove the expansion card riser out of the server.

   NOTE: If applicable, close the expansion card latch on the cooling shroud to release the full length card.

Steps

1. Press the expansion card retention latch down and turn the latch counterclockwise to open.
2. Pull the expansion card away from the riser.
3. If you want to remove the expansion card permanently, install a metal filler bracket over the empty expansion slot opening and close the expansion card latch.
4. Close the expansion card retention latch.

   NOTE: You must install a filler bracket over an empty expansion card slot to maintain Federal Communications Commission (FCC) certification of the system. The brackets also keep dust and dirt out of the system and aid in proper cooling and airflow inside the system.

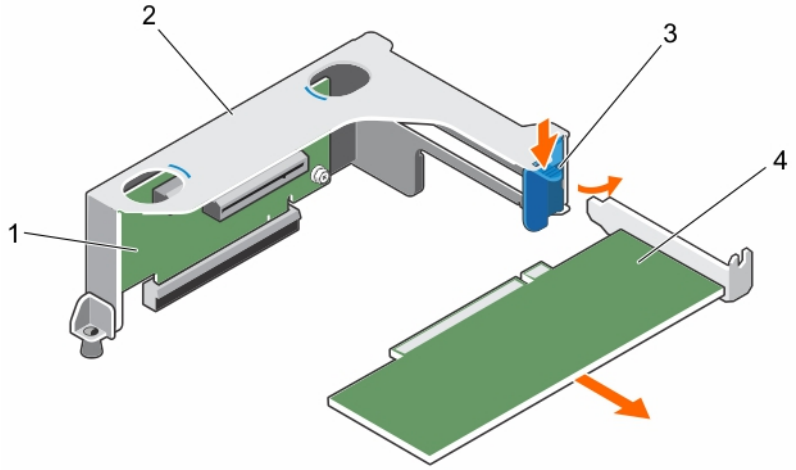

Figure 42. Removing an expansion card from the expansion card riser

1. expansion card riser
2. expansion card riser cage
3. expansion card retention latch
4. expansion card

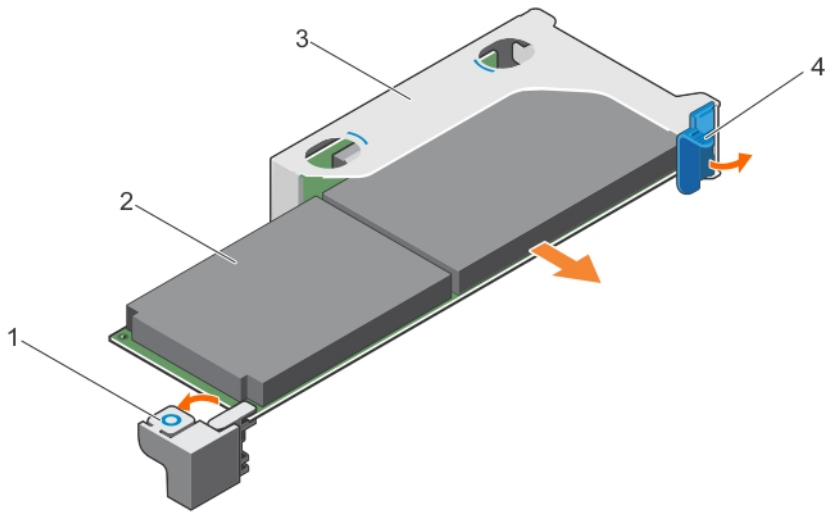

Figure 43. Removing a full height, full length expansion card from the expansion card riser

1. full height, full length expansion card latch (on cooling shroud)
2. full height, full length expansion card
3. expansion card riser cage
4. expansion card retention latch

Next steps

1. If applicable, install the expansion card(s).
2. Install the expansion card riser.
3. If applicable, open the expansion card latch on the cooling shroud to support a full length expansion card.
4. If disconnected, reconnect cables to the expansion card(s).
5. Follow the procedure listed in the After working inside your system section.

Related tasks

Before working inside your system
After working inside your system
Removing the cooling shroud
Removing the optional expansion card riser
Installing an expansion card into the expansion card riser
Installing the optional expansion card riser
Installing the cooling shroud

Related reference

Safety instructions

Installing an expansion card into the expansion card riser

Prerequisites

1. Follow the safety guidelines listed in the Safety instructions section.
2. Follow the procedure listed in the Before working inside your system section.
3. If opened, close the expansion card latch on the cooling shroud.
4. Remove the expansion card riser.
5. Unpack the expansion card and prepare it for installation.

NOTE: For instructions, see the documentation accompanying the expansion card.

CAUTION: Many repairs may only be done by a certified service technician. You should only perform troubleshooting and simple repairs as authorized in your product documentation, or as directed by the online or telephone service and

support team. Damage due to servicing that is not authorized by Dell is not covered by your warranty. Read and follow the safety instructions that are shipped with your product.

Steps

1. Press the expansion card retention latch and rotate the latch clockwise.
2. Holding the card by its edges, position the card so that the card's edge connector aligns with the expansion card connector.
3. Insert the card's edge connector firmly into the expansion card connector until the card is fully seated.
4. Close the expansion card retention latch.

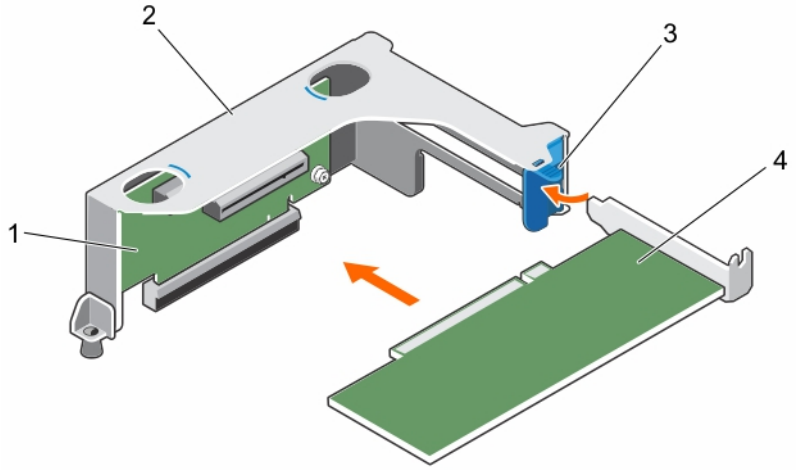

Figure 44. Installing an expansion card from the expansion card riser

1. expansion card riser
2. expansion card riser cage
3. expansion card retention latch
4. expansion card

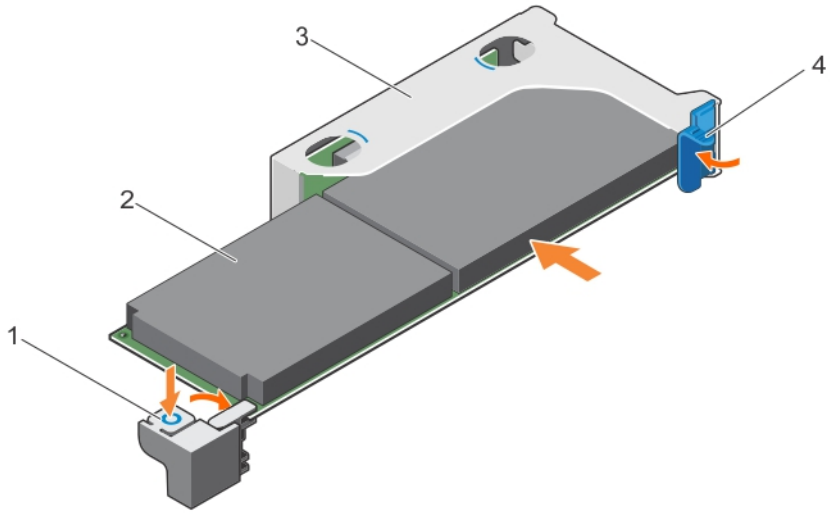

Figure 45. Installing a full height, full length expansion card from the expansion card riser

1. full height, full length expansion card latch (on cooling shroud)
2. full height, full length expansion card
3. expansion card riser cage
4. expansion card retention latch

Next steps

1. Install the expansion card riser.
2. If disconnected, connect the required power or data cables to the expansion card.
3. If required press the expansion card latch on the cooling shroud to support the full length expansion card .
4. Follow the procedure listed in the After working inside your system section.
5. Install any device drivers required for the expansion card as described in the documentation for the card.

Related tasks

Before working inside your system
After working inside your system
Removing the cooling shroud
Removing the optional expansion card riser
Installing an expansion card into the expansion card riser
Installing the optional expansion card riser
Installing the cooling shroud

Related reference

Safety instructions

iDRAC port card (optional)

The iDRAC port card consists of a SD vFlash card slot and an iDRAC port. The iDRAC port card is used for advanced management of the system. An SD vFlash card is a Secure Digital (SD) card that plugs into the SD vFlash card slot in the system. It provides persistent on-demand local storage and a custom deployment environment that allows automation of server configuration, scripts, and imaging. It emulates USB device(s). For more information, see the Integrated Dell Remote Access Controller User's Guide at **Dell.com/esmmanuals**.

The iDRAC port card consists of the SD vFlash card slot and an iDRAC port. The iDRAC port card features a dedicated NIC port and is used for remote, advanced management of the system through the network.

An SD vFlash card is a Secure Digital (SD) card that plugs into the SD vFlash card slot in the iDRAC port card. It provides persistent on-demand local storage and a custom deployment environment that enables automation of server configuration, scripts, and imaging. It emulates a USB device. For more information, see the Integrated Dell Remote Access Controller User's Guide at **Dell.com/idracmanuals**.

Removing the iDRAC ports card

Prerequisites

CAUTION: Many repairs may only be done by a certified service technician. You should only perform troubleshooting and simple repairs as authorized in your product documentation, or as directed by the online or telephone service and support team. Damage due to servicing that is not authorized by Dell is not covered by your warranty. Read and follow the safety instructions that are shipped with your product.

1. Follow the safety guidelines listed in the Safety instructions section.
2. Follow the procedure listed in the Before working inside your system section.
3. If applicable, disconnect the cables from expansion card (s).
4. Remove the expansion card riser.

   NOTE: If applicable, close the expansion card latch on the cooling shroud to release the full length card.
5. Remove the cooling shroud.
6. Keep the Phillips #2 screwdriver ready.

Steps

1. Disconnect the management network cable from the iDRAC port.
2. Loosen the two screws securing the iDRAC ports card holder to the system board.
3. Pull the iDRAC ports card up and toward the front of the system to disengage it from the connector and remove the card from the chassis.

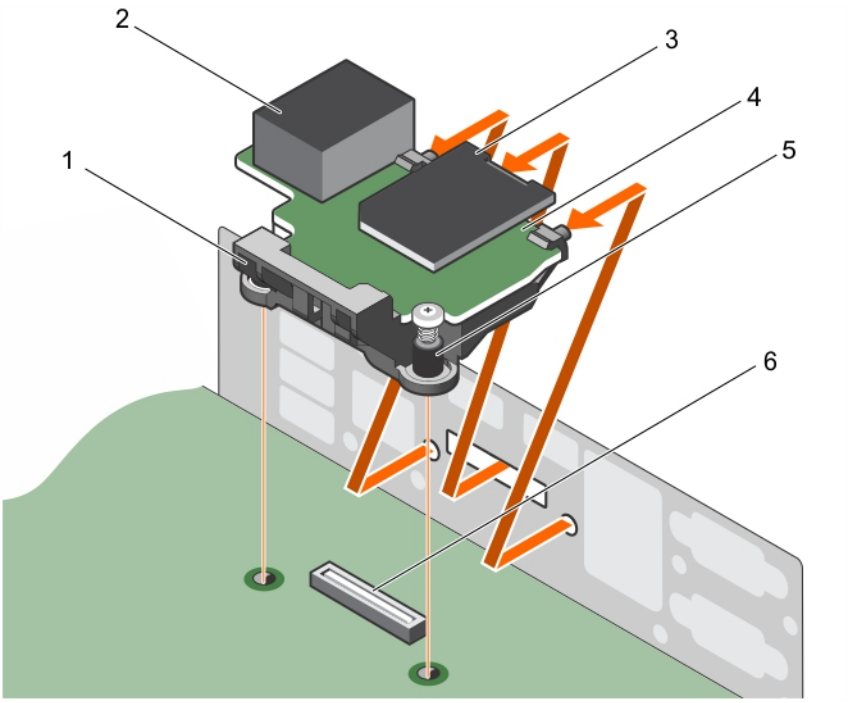

Figure 46. Removing the iDRAC ports card

1. iDRAC ports card holder
2. iDRAC port
3. SD vFlash media card reader
4. iDRAC ports card
5. screws (2)
6. iDRAC ports card connector on system board

Next steps

1. Install the expansion card riser.
2. If applicable, connect the required power or data cables to the expansion card(s).
3. Install the cooling shroud.
4. If applicable, open the expansion card latch on the cooling shroud to support the full length expansion card.
5. Follow the procedure listed in the After working inside your system section.

Related tasks

Before working inside your system
After working inside your system
Removing the cooling shroud
Removing the optional expansion card riser
Installing the optional expansion card riser
Installing the cooling shroud

Related reference

Safety instructions

Installing the iDRAC ports card

Prerequisites

CAUTION: Many repairs may only be done by a certified service technician. You should only perform troubleshooting and simple repairs as authorized in your product documentation, or as directed by the online or telephone service and support team. Damage due to servicing that is not authorized by Dell is not covered by your warranty. Read and follow the safety instructions that are shipped with your product.

1. Follow the safety guidelines listed in the Safety instructions section.

2. Follow the procedure listed in the Before working inside your system section.
3. Remove the cooling shroud.

   NOTE: If applicable, close the expansion card latch on the cooling shroud to release the full length card.
4. If applicable, disconnect the cables from expansion card (s).
5. If applicable, remove the expansion card riser
6. Keep the Phillips #2 screwdriver ready.

Steps

1. Align and insert the tabs on the iDRAC ports card on the slots on the chassis wall.
2. Insert the iDRAC ports card into the connector on the system board.
3. Tighten the screws to secure the iDRAC ports card.

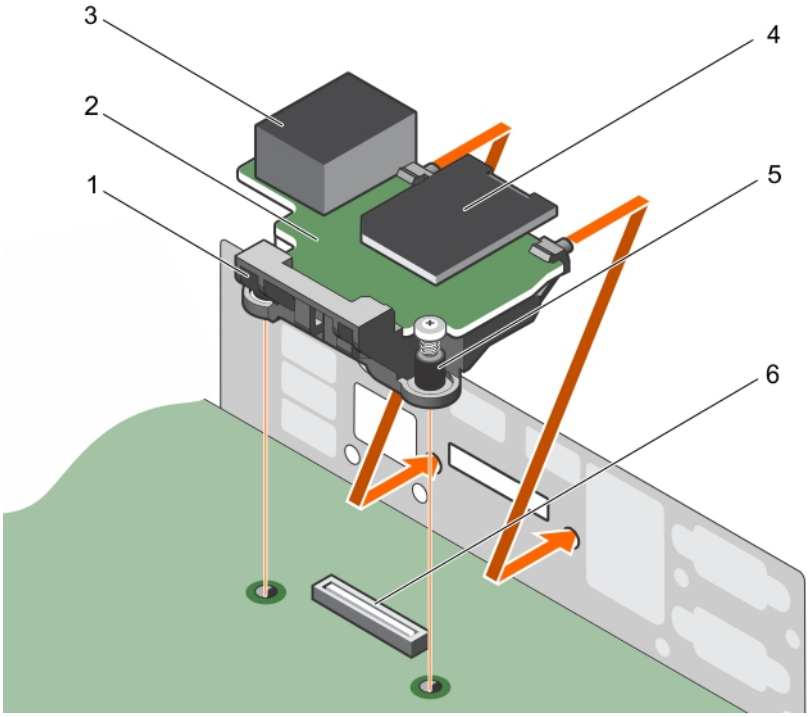

Figure 47. Installing the iDRAC ports card

1. iDRAC ports card holder
2. iDRAC ports card
3. iDRAC port
4. SD vFlash media card reader
5. screws (2)
6. iDRAC ports card connector on system board

Next steps

1. If removed, reinstall the PCIe expansion card riser.
2. If disconnected, connect the cables to the expansion card(s).
3. Reinstall the cooling shroud.
4. If required, open the expansion card latch on the cooling shroud to secure the full length expansion card.
5. Follow the procedure listed in the After working inside your system section.

Related tasks

Before working inside your system
After working inside your system
Removing the cooling shroud
Removing the optional expansion card riser
Installing the optional expansion card riser
Installing the cooling shroud

Related reference

Safety instructions

SD vFlash card (optional)

An SD vFlash card is a Secure Digital (SD) card that plugs into the SD vFlash card slot in the iDRAC port card. It provides persistent on-demand local storage and a custom deployment environment that enables automation of server configuration, scripts, and imaging. It emulates USB device(s). For more information, see the Integrated Dell Remote Access Controller User's Guide at **Dell.com/idracmanuals**.

Removing the optional SD vFlash card

Prerequisites

1. Follow the safety guidelines listed in the Safety instructions section.
2. Locate the SD vFlash card slot at the back of the chassis.

Steps

To remove the SD vFlash card, push the SD vFlash card inward to release it, and pull the SD vFlash card from the SD vFlash card slot.

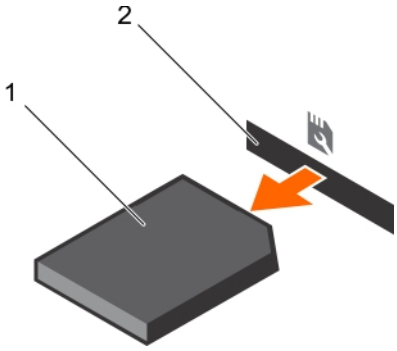

Figure 48. Removing the optional SD vFlash card

a. SD vFlash card
b. SD vFlash card slot

Internal dual SD module (optional)

The Internal Dual SD Module (IDSDM) card provides two SD card slots. This card offers the following features:

- Dual card operation — maintains a mirrored configuration by using SD cards in both the slots and provides redundancy.

  NOTE: When the Redundancy option is set to Mirror Mode in the Integrated Devices screen of System Setup, the information is replicated from one SD card to another.
- Single card operation — single card operation is supported, but without redundancy.

Removing an internal SD card

Prerequisites

1. Follow the safety guidelines listed in the Safety instructions section.
2. Follow the procedure listed in the Before working inside your system section.

CAUTION: Many repairs may only be done by a certified service technician. You should only perform troubleshooting and simple repairs as authorized in your product documentation, or as directed by the online or telephone service and support team. Damage due to servicing that is not authorized by Dell is not covered by your warranty. Read and follow the safety instructions that are shipped with your product.

NOTE: Temporarily label each SD card with its corresponding slot number before removal. Re-install the SD card(s) into the corresponding slots.

Steps

Locate the SD card slot on the internal dual SD module and press the card to release it from the slot.

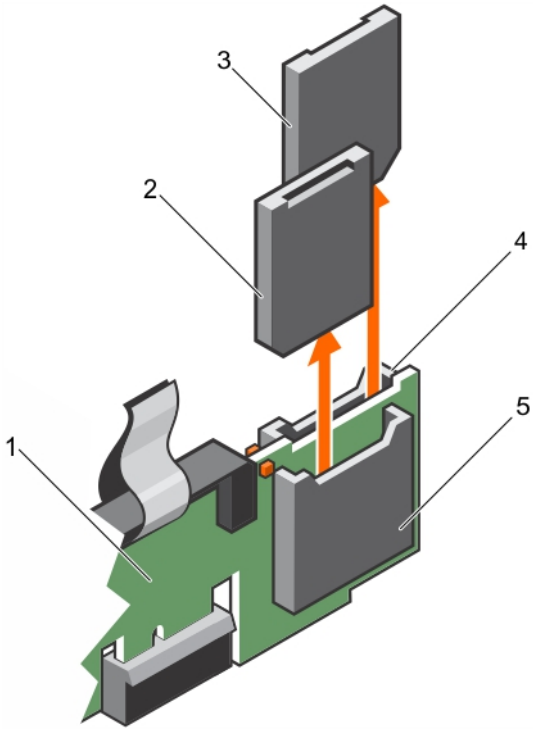

Figure 49. Removing an internal SD card

1. IDSDM
2. SD card 1
3. SD card 2
4. SD card slot 2
5. SD card slot 1

Next steps

Follow the procedure listed in the After working inside your system section.

Related tasks

Before working inside your system
After working inside your system
Removing the cooling shroud
Removing the optional expansion card riser
Installing the optional expansion card riser
Installing the cooling shroud

Related reference

Safety instructions

Installing an internal SD card

Prerequisites

1. Follow the safety guidelines listed in the Safety instructions section.
2. Follow the procedure listed in the Before working inside your system section.

CAUTION: Many repairs may only be done by a certified service technician. You should only perform troubleshooting and simple repairs as authorized in your product documentation, or as directed by the online or telephone service and support team. Damage due to servicing that is not authorized by Dell is not covered by your warranty. Read and follow the safety instructions that are shipped with your product.

NOTE: To use an SD card with your system, ensure that the Internal SD Card Port is enabled in System Setup.

NOTE: Temporarily label each SD card with its corresponding slot number before removal. Re-install the SD card(s) into the corresponding slots.

Steps

1. Locate the SD card connector on the internal dual SD module. Orient the SD card appropriately and insert the contact-pin end of the card into the slot.

   NOTE: The slot is keyed to ensure correct insertion of the card.

2. Press the card into the card slot to lock it into place.

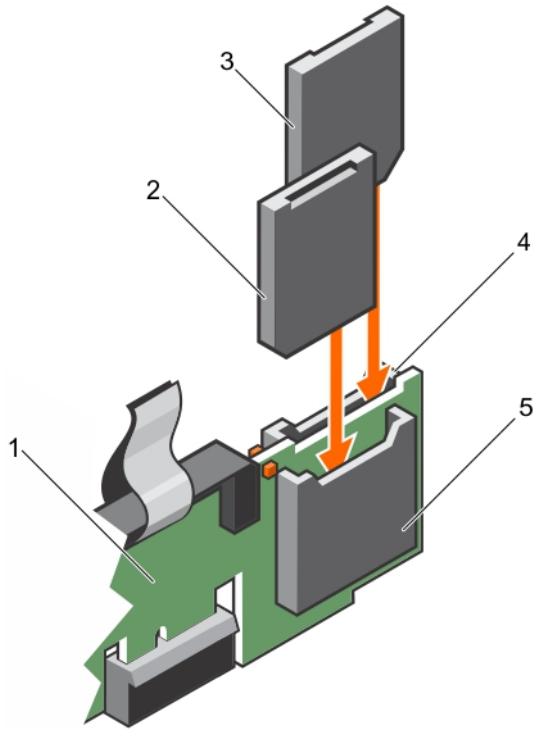

Figure 50. Installing an internal SD card

1. IDSDM
2. SD card 2
3. SD card 1
4. SD card slot 1
5. SD card slot 2

Next steps

Related tasks

Before working inside your system
After working inside your system
Removing the cooling shroud
Removing the optional expansion card riser
Installing the optional expansion card riser
Installing the cooling shroud

Related reference

Safety instructions

Removing the optional internal dual SD module

Prerequisites

CAUTION: Many repairs may only be done by a certified service technician. You should only perform troubleshooting and simple repairs as authorized in your product documentation, or as directed by the online or telephone service and support team. Damage due to servicing that is not authorized by Dell is not covered by your warranty. Read and follow the safety instructions that are shipped with your product.

1. Follow the safety guidelines listed in the Safety instructions section.
2. Follow the procedure listed in the Before working inside your system section.
3. If installed, remove the SD cards.

   NOTE: Temporarily label each SD card with its corresponding slot number before removal. Reinstall the SD cards into the corresponding slots.

Steps

1. Locate the internal dual SD module (IDSDM) on the system board. To locate the internal dual SD module connector, see the System board connectors section.
2. Holding the pull tab, lift the IDSDM out of the system.

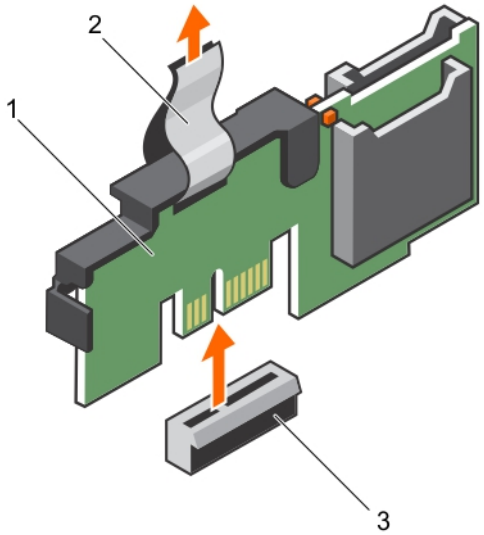

Figure 51. Removing the internal dual SD module (IDSDM)

a. IDSDM
b. pull tab
c. IDSDM connector

Next steps

1. Install the IDSDM.
2. If removed, install the SD cards.
3. Follow the procedure listed in the After working inside your system section.

Installing the optional internal dual SD module

Prerequisites

CAUTION: Many repairs may only be done by a certified service technician. You should only perform troubleshooting and simple repairs as authorized in your product documentation, or as directed by the online or telephone service and support team. Damage due to servicing that is not authorized by Dell is not covered by your warranty. Read and follow the safety instructions that are shipped with your product.

1. Follow the safety guidelines listed in the Safety instructions section.
2. Follow the procedure listed in the Before working inside your system section.

   NOTE: Temporarily label each SD card with its corresponding slot before removal.

Steps

1. Locate the internal dual SD module (IDSDM) connector on the system board. To locate the IDSDM connector, see the System board connectors section.
2. Align the IDSDM with the connector on the system board.
3. Push the IDSDM until it is firmly seated on the system board.

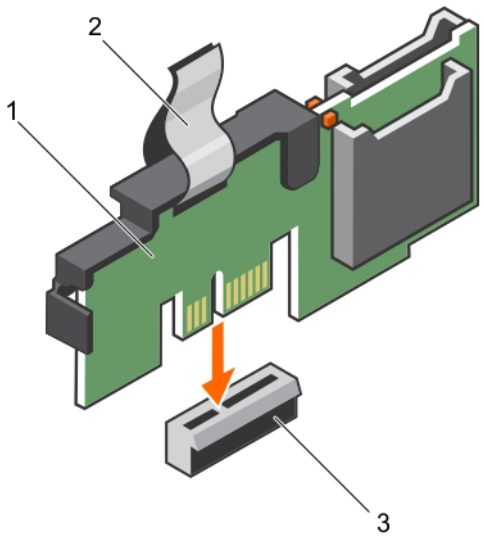

Figure 52. Installing the optional internal dual SD module

a. IDSDM
b. pull tab
c. IDSDM connector

Next steps

1. Install the SD cards.

   NOTE: Re-install the SD cards into the same slots based on the labels you had marked on the cards during removal.
2. Follow the procedure listed in the After working inside your system section.

Integrated storage controller card

Your system supports an integrated storage controller card that provides the integrated storage subsystem for your system's internal hard drives. The controller supports SAS/SATA and SSD drives and also enables you to set up the hard drives in RAID configurations as supported by the version of the storage controller included with your system.

NOTE: The upgrade from embedded controller or Software RAID controller to Hardware RAID controller is not supported.

Removing the integrated storage controller card

Prerequisites

1. Follow the safety guidelines listed in the Safety instructions section.
2. Follow the procedure listed in the Before working inside your system section.
3. Remove the cooling shroud.

   NOTE: If applicable, close the expansion card latch on the cooling shroud to release the full length card.
4. If applicable, disconnect the power or data cables from expansion card (s).
5. If applicable, remove the expansion-card riser
6. Keep the Phillips #2 screwdriver ready.

CAUTION: Many repairs may only be done by a certified service technician. You should only perform troubleshooting and simple repairs as authorized in your product documentation, or as directed by the online or telephone service and support team. Damage due to servicing that is not authorized by Dell is not covered by your warranty. Read and follow the safety instructions that are shipped with your product.

Steps

1. Loosen the screws that secure the integrated storage controller cable to the integrated storage controller card connector on the system board.
2. Lift the integrated storage controller cable out and move it away from the integrated storage controller card.
3. Lift one end of the card at an angle to disengage the card from the integrated storage controller card holder on system board.
4. Lift the card out of the chassis.

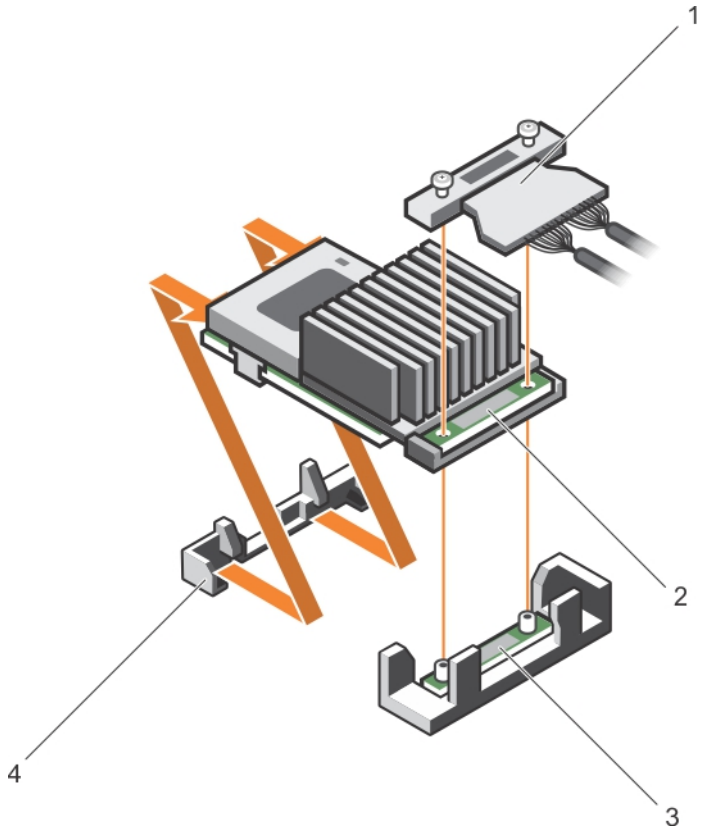

Figure 53. Removing the integrated storage controller card

1. integrated storage controller cable
2. integrated storage controller card
3. integrated storage controller card connector on the system board
4. integrated storage controller card holder

Next steps

1. If applicable, install the PCIe expansion-card riser.
2. If applicable, connect the required power or data cables to the expansion card(s).
3. Reinstall the cooling shroud.
4. If applicable open the expansion-card latch on the cooling shroud to secure the full length expansion card.
5. Follow the procedure listed in the After working inside your system section.

Related tasks

Before working inside your system
After working inside your system
Removing the cooling shroud
Removing the optional expansion card riser
Installing the optional expansion card riser
Installing the cooling shroud

Related reference

Safety instructions

Installing the integrated storage controller card

Prerequisites

1. Follow the safety guidelines listed in the Safety instructions section.
2. Follow the procedure listed in the Before working inside your system section.
3. Remove the cooling shroud.

   NOTE: If applicable, close the expansion card latch on the cooling shroud to release the full length card.
4. If applicable, disconnect the power or data cables from expansion card (s).
5. If applicable, remove the expansion card riser
6. Keep the Phillips #2 screwdriver ready.

CAUTION: Many repairs may only be done by a certified service technician. You should only perform troubleshooting and simple repairs as authorized in your product documentation, or as directed by the online or telephone service and support team. Damage due to servicing that is not authorized by Dell is not covered by your warranty. Read and follow the safety instructions that are shipped with your product.

Steps

1. Align the end of the integrated storage controller card opposite the connector with the integrated storage controller card holder.
2. Lower the connector side of the integrated storage controller card into the integrated storage controller card connector on the system board.

   Ensure that the tabs on the system board align with the screw holes on the integrated storage controller card.
3. Align the screws on the integrated storage controller card cable with the screw holes on the connector.
4. Tighten the screws to secure the integrated storage controller card cable with the integrated storage controller card connector on the system board.

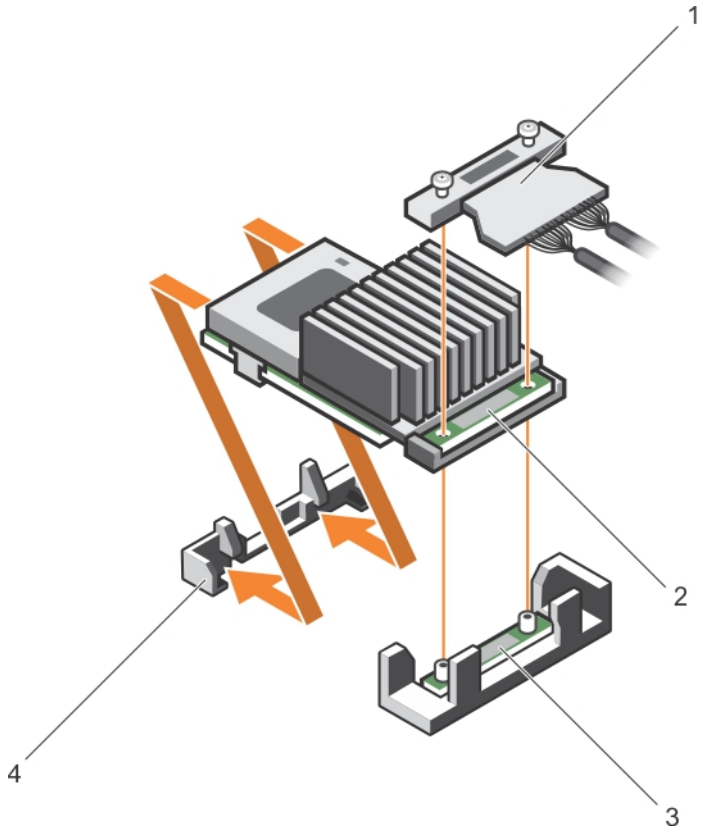

Figure 54. Installing the integrated storage controller card

1. integrated storage controller cable
2. integrated storage controller card
3. integrated storage controller card connector on the system board
4. integrated storage controller card holder

Next steps

1. If applicable, install the PCIe expansion-card riser.
2. If applicable, connect the required power or data cables to the expansion card(s).
3. Reinstall the cooling shroud.
4. If applicable open the expansion-card latch on the cooling shroud to secure the full length expansion card.
5. Follow the procedure listed in the After working inside your system section.

Related tasks

Before working inside your system
After working inside your system
Removing the cooling shroud
Removing the optional expansion card riser
Installing the optional expansion card riser
Installing the cooling shroud

Related reference

Safety instructions

Processors and heat sinks

Use the following procedure when:

- Removing and installing a heat sink
- Installing an additional processor
- Replacing a processor

NOTE: To ensure proper system cooling, you must install a processor blank in any empty processor socket.

Removing a heat sink

Prerequisites

CAUTION: Many repairs may only be done by a certified service technician. You should only perform troubleshooting and simple repairs as authorized in your product documentation, or as directed by the online or telephone service and support team. Damage due to servicing that is not authorized by Dell is not covered by your warranty. Read and follow the safety instructions that came with the product.

NOTE: This is a Field Replaceable Unit (FRU). Removal and installation procedures should be performed only by Dell certified service technicians.

CAUTION: Never remove the heat sink from a processor unless you intend to remove the processor. The heat sink is necessary to maintain proper thermal conditions.

NOTE: To ensure proper system cooling, you must install a processor blank and heat sink blank in any empty processor socket.

1. Follow the safety guidelines listed in the Safety instructions section.
2. Follow the procedure listed in the Before working inside your system.
3. Keep the Phillips #2 screwdriver ready.
4. If connected, disconnect the cables from expansion card (s).
5. If connected, disconnect the cables from expansion card(s).
6. If required, remove the PCIe expansion card riser.
7. Remove the cooling shroud.

   NOTE: If applicable, close the expansion card latch on the cooling shroud to release the full length card.

WARNING: The heat sink is hot to touch for some time after the system has been powered down. Allow the heat sink to cool before removing it.

Steps

1. Loosen one of the screws that secure the heat sink to the system board.

   Allow some time (approximately 30 seconds) for the heat sink to loosen from the processor.
2. Remove the screw diagonally opposite the screw you first removed.
3. Repeat the procedure for the remaining two screws.

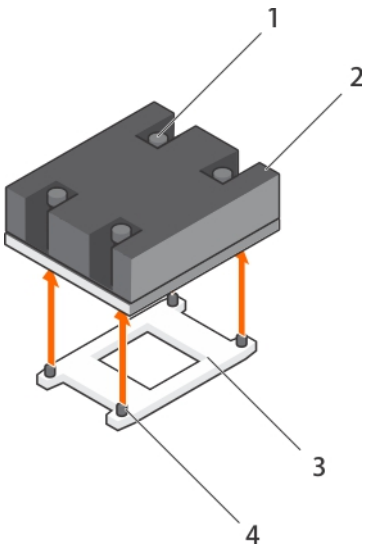

Figure 55. Removing the heat sink

1. retention screw (4)
2. heat sink

3. processor socket
4. heat sink retention socket (4)

Next steps

1. Remove the processor.
2. Install the heat sink.
3. Follow the procedure listed in the After working inside your system section.

Related tasks

Before working inside your system
After working inside your system
Removing the cooling shroud
Removing the optional expansion card riser
Installing the optional expansion card riser
Installing the cooling shroud
Removing a processor
Installing a processor
Installing a heat sink

Related reference

Safety instructions

Removing a processor

Prerequisites

CAUTION: Many repairs may only be done by a certified service technician. You should only perform troubleshooting and simple repairs as authorized in your product documentation, or as directed by the online or telephone service and support team. Damage due to servicing that is not authorized by Dell is not covered by your warranty. Read and follow the safety instructions that are shipped with your product.

NOTE: This is a Field Replaceable Unit (FRU). Removal and installation procedures should be performed only by Dell certified service technicians.

NOTE: If you are upgrading your system, download the latest system BIOS version from Dell.com/support and follow the instructions included in the compressed download file to install the update on your system.

NOTE: You can update the system BIOS by using the Dell Lifecycle Controller.

NOTE: To ensure proper system cooling, you must install a processor blank in any empty processor socket.

1. Follow the safety guidelines listed in the Safety instructions section.
2. Follow the procedure listed in the Before working inside your system section.
3. Keep the Phillips #2 screwdriver ready.
4. Remove the cooling shroud.

   NOTE: If required, close the expansion card latch on the cooling shroud to release the full length card.
5. If applicable, disconnect the power or data cables from expansion card (s).
6. If required, remove the expansion card riser.
7. Remove the heat sink.

WARNING: The processor is hot to touch for some time after the system has been powered down. Allow the processor to cool before removing it.

CAUTION: The processor is held in its socket under strong pressure. Be aware that the release lever can spring up suddenly if not firmly grasped.

Steps

1. Release the *open first* socket lever near the unlock icon by pushing the lever down and out from under the tab.
2. Release the *close first* socket release lever near the lock icon by pushing the lever down and out from under the tab. Lift the lever 90 degrees upward.
3. Lower the *open first* socket-release lever to lift the processor shield.
4. Hold the tab on the processor shield and lift the processor shield until the *open first* socket-release lever lifts up.

   CAUTION: The socket pins are fragile and can be permanently damaged. Be careful not to bend the pins in the socket when removing the processor out of the socket.
5. Lift the processor out of the socket and leave the *open first* socket-release lever up.

   NOTE: If you are permanently removing the processor, you must install a socket protective cap in the vacant socket to protect the socket pins and keep the socket free of dust.

   NOTE: After removing the processor, place it in an anti-static container for reuse, return, or temporary storage. Do not touch the bottom of the processor. Touch only the side edges of the processor.

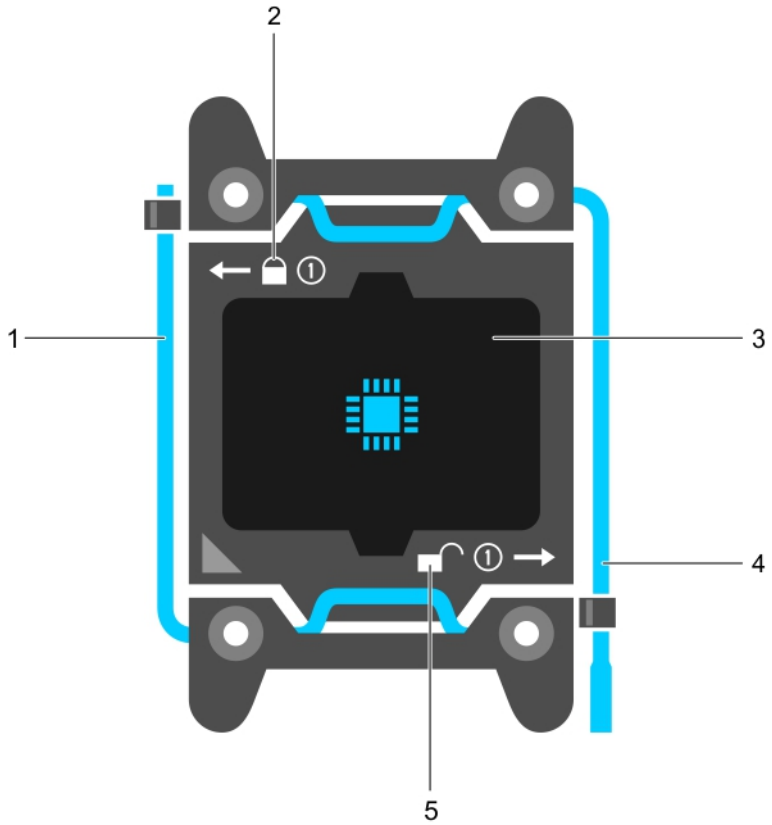

Figure 56. Processor shield

1. *close first* socket release lever
2. lock icon
3. processor
4. *open first* socket release lever
5. unlock icon

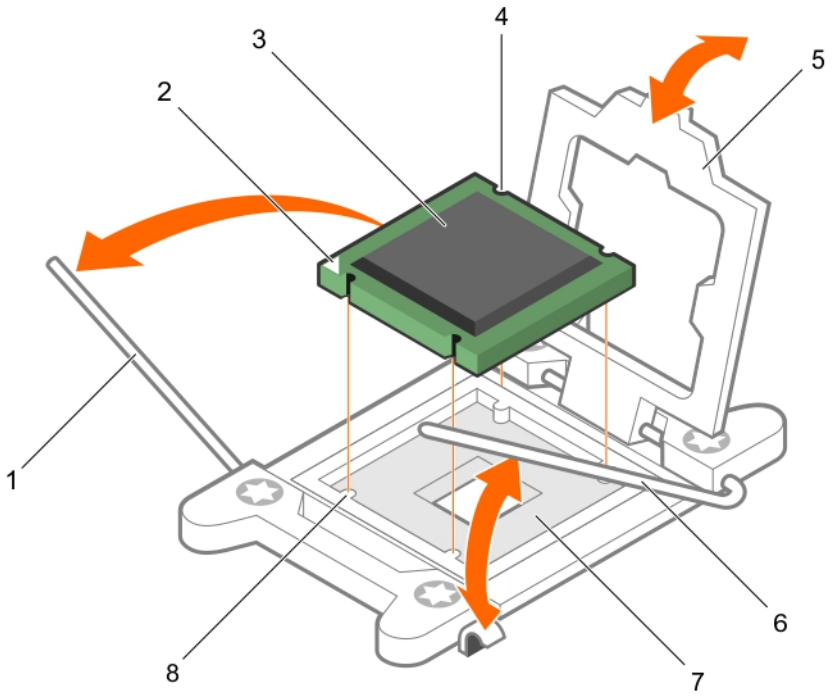

Figure 57. Removing a processor

1. *close first* socket-release lever
2. pin-1 indicator of processor
3. processor
4. slot (4)
5. processor shield
6. *open first* socket-release lever
7. socket
8. socket keys (4)

Next steps

1. Replace the processor(s).
2. Install the heat sink.
3. If removed, reinstall the PCIe expansion card riser.
4. If disconnected, reconnect the cables to the expansion card(s).
5. Reinstall the cooling shroud.
6. If required, open the expansion card latch on the cooling shroud to support the full length expansion card.
7. Follow the procedure listed in the After working inside your system section.

Related tasks

Before working inside your system
After working inside your system
Removing the cooling shroud
Removing the optional expansion card riser
Installing the optional expansion card riser
Installing the cooling shroud
Installing a processor
Installing a heat sink

Related reference

Safety instructions

Installing a processor

Prerequisites

CAUTION: Many repairs may only be done by a certified service technician. You should only perform troubleshooting and simple repairs as authorized in your product documentation, or as directed by the online or telephone service and support team. Damage due to servicing that is not authorized by Dell is not covered by your warranty. Read and follow the safety instructions that are shipped with your product.

1. Follow the safety guidelines listed in the Safety instructions section.
2. Follow the procedure listed in the Before working inside your system section.
3. Keep the Phillips #2 screwdriver ready.
4. If you are upgrading your system, download the latest system BIOS version from **Dell.com/support** and follow the instructions included in the compressed download file to install the update on your system.

   NOTE: You can also update the system BIOS by using the Dell Lifecycle Controller.
5. Remove the cooling shroud.

NOTE: The heat sink and processor are too hot to touch for some time after the system has been powered down. Allow the heat sink and processor to cool down before handling them.

CAUTION: Never remove the heat sink from a processor unless you intend to remove the processor. The heat sink is necessary to maintain proper thermal conditions.

NOTE: If you are installing a single processor, it must be installed in socket CPU1.

Steps

1. Unpack the new processor.

   NOTE: If the processor has previously been used in a system, remove any remaining thermal grease from the processor by using a lint-free cloth.
2. Locate the processor socket.
3. If applicable, remove the socket protective cap.
4. Release the *open first* socket-release lever near the unlock icon by pushing the lever down and out from under the tab.
5. Similarly, release the *close first* socket-release lever near the lock icon by pushing the lever down and out from under the tab. Lift the lever 90 degrees upward.
6. Hold the tab near the lock symbol on the processor shield and lift it up and out of the way.

   CAUTION: Positioning the processor incorrectly can permanently damage the system board or the processor. Be careful not to bend the pins in the socket.

   CAUTION: While removing or reinstalling the processor, wipe your hands of any contaminants. Contaminants on the processor pins such as thermal grease or oil can damage the processor.
7. Align the processor with the socket keys.

   CAUTION: Do not use force to seat the processor. When the processor is positioned correctly, it engages easily into the socket.
8. Align the pin-1 indicator of the processor with the triangle on the system board.
9. Place the processor on the socket such that the slots on the processor align with the socket keys.
10. Close the processor shield.
11. Lower the *close first* socket-release lever near the lock icon and push it under the tab to lock it.
12. Similarly, lower the *open first* socket-release lever near the unlock icon and push it under the tab to lock it.

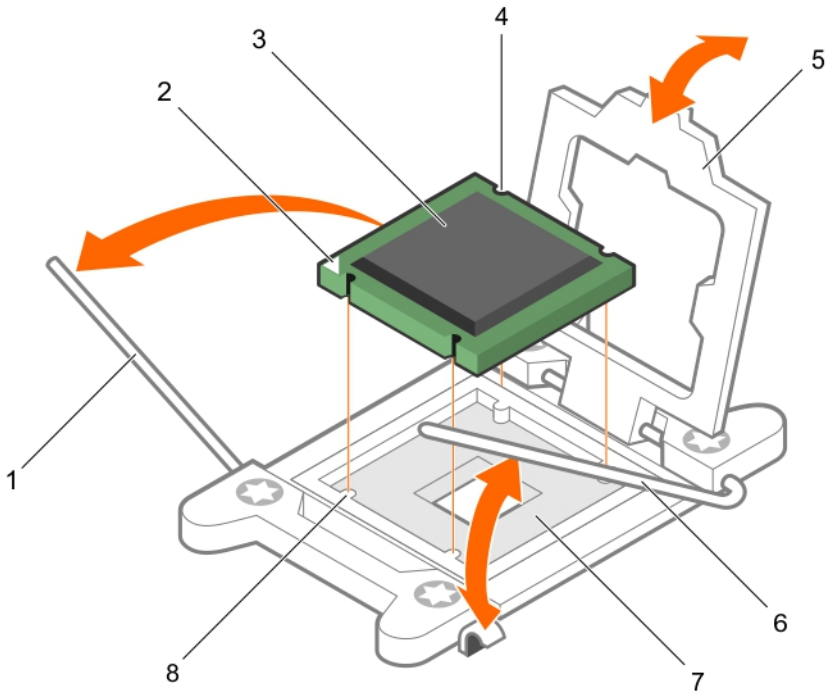

Figure 58. Installing a processor

1. socket-release lever 1
2. pin–1 corner of the processor
3. processor
4. slot (4)
5. processor shield
6. socket-release lever 2
7. processor socket
8. tab (4)

Next steps

NOTE: Ensure that you install the heat sink after you install the processor. The heat sink is necessary to maintain proper thermal conditions.

1. Install the heat sink.
2. Install the cooling shroud.
3. While booting, press F2 to enter System Setup and verify that the processor information matches the new system configuration.
4. Run the system diagnostics to verify that the new processor operates correctly.

Related tasks

Before working inside your system
After working inside your system
Removing the cooling shroud
Removing the optional expansion card riser
Installing the optional expansion card riser
Installing the cooling shroud
Installing a heat sink

Related reference

Safety instructions

Installing a heat sink

Prerequisites

CAUTION: Many repairs may only be done by a certified service technician. You should only perform troubleshooting and simple repairs as authorized in your product documentation, or as directed by the online or telephone service and support team. Damage due to servicing that is not authorized by Dell is not covered by your warranty. Read and follow the safety instructions that are shipped with your product.

1. Follow the safety guidelines listed in the Safety instructions section.
2. Follow the procedure listed in the Before working inside your system section.
3. Keep the Phillips #2 screwdriver ready.
4. Install the processor.

NOTE: If you are installing a single processor, it must be installed in socket CPU1.

Steps

1. If you are using an existing heat sink, remove the thermal grease from the heat sink by using a clean lint-free cloth.
2. Use the thermal grease syringe included with your processor kit to apply the grease in a thin spiral on the top of the processor.

   CAUTION: Applying too much thermal grease can result in excess grease coming in contact with and contaminating the processor socket.

   NOTE: The thermal grease syringe is intended for one-time use only. Dispose of the syringe after you use it.

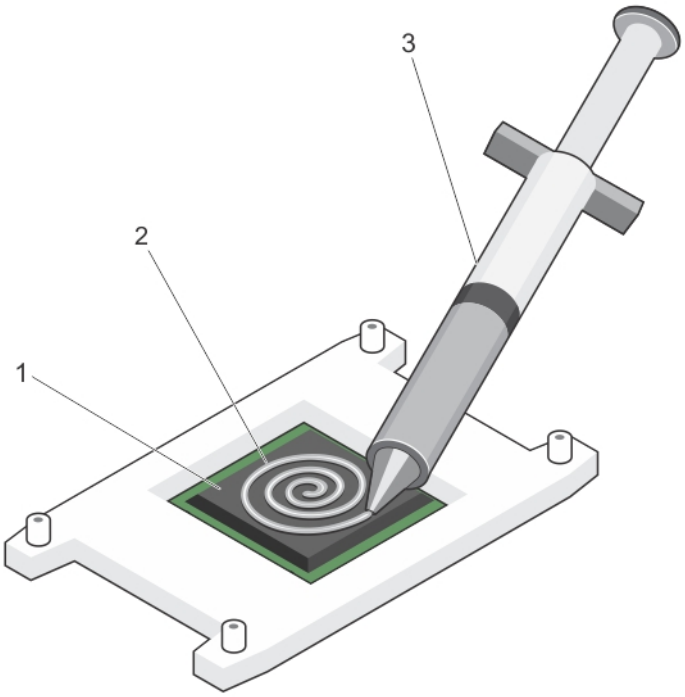

Figure 59. Applying thermal grease on the top of the processor

   a. processor
   b. thermal grease
   c. thermal grease syringe
3. Place the heat sink onto the processor.
4. Tighten one of the four screws to secure the heat sink to the system board.
5. Tighten the screw diagonally opposite to the first screw you have tightened.

NOTE: Do not over-tighten the heat sink retention screws when installing the heat sink. To prevent over-tightening, tighten the retention screw until resistance is felt, and stop after the screw is seated. The screw tension should not be more than 6 in-lb (6.9 kg-cm).

6. Repeat the procedure for the remaining two screws.

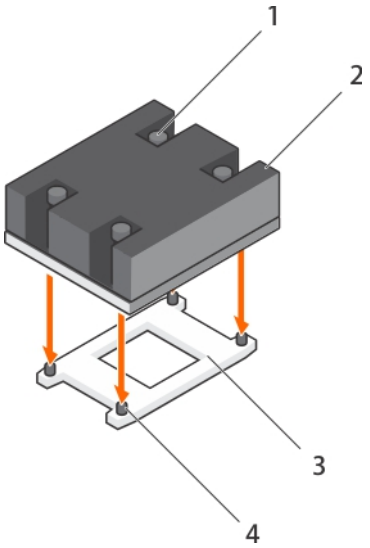

Figure 60. Installing the heat sink

1. retention screw (4)
2. heat sink
3. processor socket
4. retention screw slot (4)

Next steps

1. Follow the procedure listed in the After working inside your system section.
2. While booting, press F2 to enter System Setup and verify that the processor information matches the new system configuration.
3. Run the system diagnostics to verify that the new processor operates correctly.

Related tasks

Before working inside your system
After working inside your system
Removing the cooling shroud
Removing the optional expansion card riser
Installing the optional expansion card riser
Installing the cooling shroud
Removing a processor

Related reference

Safety instructions

Power supply units (PSU)

Your system supports:

- Two 495 W, 750 W, or 1100 W AC PSU modules
- One cabled 450 W PSU module (non-redundant)
- Two 750 W DC PSU modules
  - When two identical PSUs are installed, the PSU configuration is redundant (1 + 1). In redundant mode, power is supplied to the system equally from both PSUs to maximize efficiency.
  - When only one PSU is installed, the PSU configuration is non-redundant (1 + 0). Power is supplied to the system only by the single PSU.
  - When configured in a 2+0 configuration, 1+1 redundancy will not be supported.

NOTE: If two PSUs are used, they must be of the same type and must have the same maximum output power.

NOTE: For AC PSUs, use only PSUs with the Extended Power Performance (EPP) label on the back. Mixing PSUs from earlier generations of Dell PowerEdge servers can result in a PSU mismatch condition or failure to turn on.

Hot spare feature

Your system supports the hot spare feature that significantly reduces the power overhead associated with power supply unit (PSU) redundancy.

When the hot spare feature is enabled, one of the redundant PSUs is switched to the sleep state. The active PSU supports 100 percent of the load, thus operating at higher efficiency. The PSU in the sleep state monitors output voltage of the active PSU. If the output voltage of the active PSU drops, the PSU in the sleep state returns to an active output state.

If having both PSUs active is more efficient than having one PSU in the sleep state, the active PSU can also activate the sleeping PSU.

The default PSU settings are as follows:

- If the load on the active PSU is more than 50 percent, then the redundant PSU is switched to the active state.
- If the load on the active PSU falls below 20 percent, then the redundant PSU is switched to the sleep state.

You can configure the hot spare feature by using the iDRAC settings. For more information about iDRAC settings, see the *Integrated Dell Remote Access Controller User's Guide* available at **Dell.com/idracmanuals**.

Removing the power supply unit blank

Install the power supply unit (PSU) blank only in the second PSU bay.

Prerequisites

CAUTION: Many repairs may only be done by a certified service technician. You should only perform troubleshooting and simple repairs as authorized in your product documentation, or as directed by the online or telephone service and support team. Damage due to servicing that is not authorized by Dell is not covered by your warranty. Read and follow the safety instructions that are shipped with your product.

Follow the safety guidelines listed in the Safety instructions section.

Steps

If you are installing a second power supply unit (PSU), remove the PSU blank in the bay by pulling the blank outward.

CAUTION: To ensure proper system cooling, the PSU blank must be installed in the second PSU bay in a non-redundant configuration. Remove the PSU blank only if you are installing a second PSU.

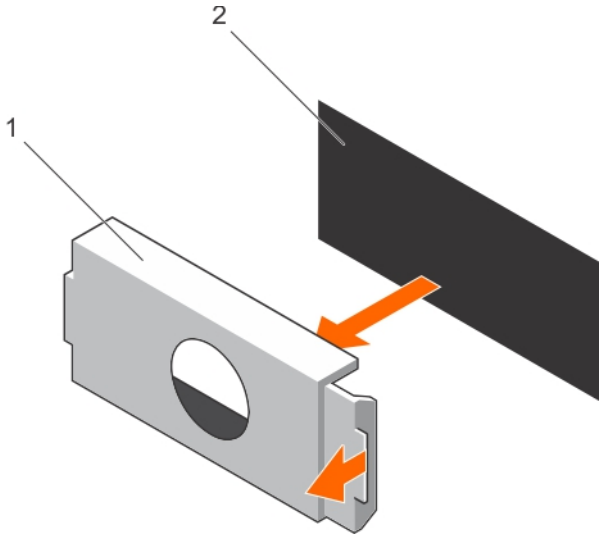

Figure 61. Removing the PSU blank

a. PSU blank
b. PSU bay

Next steps

Install the PSU or PSU blank.

Installing the power supply unit blank

Install the power supply unit (PSU) blank only in the second PSU bay.

Prerequisites

CAUTION: Many repairs may only be done by a certified service technician. You should only perform troubleshooting and simple repairs as authorized in your product documentation, or as directed by the online or telephone service and support team. Damage due to servicing that is not authorized by Dell is not covered by your warranty. Read and follow the safety instructions that are shipped with your product.

1. Follow the safety guidelines listed in the Safety instructions section.

Steps

Align the power supply unit blank with the power supply unit slot and push it into the power supply unit slot until it clicks into place.

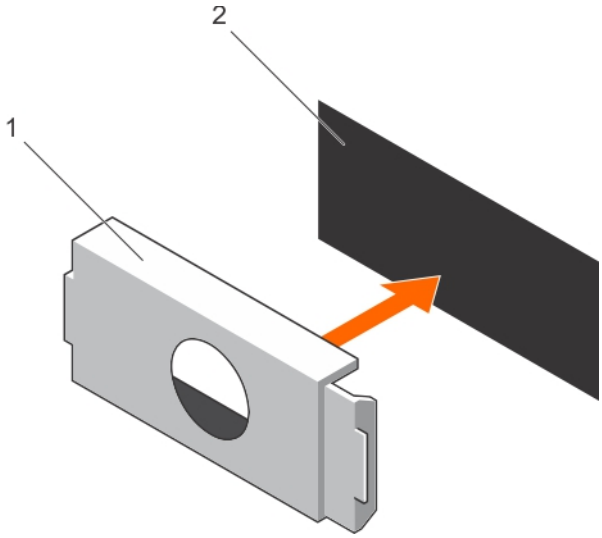

Figure 62. Installing the PSU blank

a. PSU blank
b. PSU bay

Removing an AC power supply unit

Prerequisites

CAUTION: Many repairs may only be done by a certified service technician. You should only perform troubleshooting and simple repairs as authorized in your product documentation, or as directed by the online or telephone service and support team. Damage due to servicing that is not authorized by Dell is not covered by your warranty. Read and follow the safety instructions that are shipped with your product.

CAUTION: The system needs one power supply unit (PSU) for normal operation. On power-redundant systems, remove and replace only one PSU at a time in a system that is powered on.

NOTE: You may have to unlatch and lift the optional cable management arm if it interferes with the power supply unit (PSU) removal. For information about the cable management arm, see the system's rack documentation.

Steps

1. Disconnect the power cable from the power source and from the PSU you intend to remove, and then remove the cables from the strap.
2. Press the release latch and slide the PSU out of the chassis by using the PSU handle.

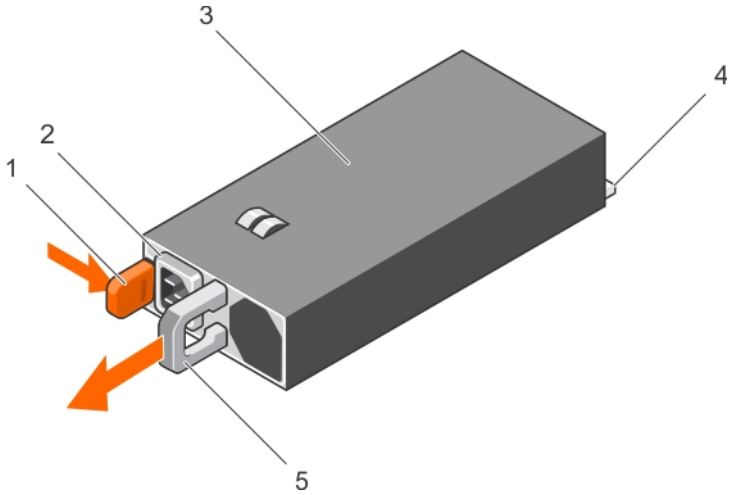

Figure 63. Removing an AC PSU

1. release latch
2. PSU cable connector
3. PSU
4. power connector
5. PSU handle

Related tasks

Before working inside your system
After working inside your system
Installing an AC power supply unit

Related reference

Safety instructions

Installing an AC power supply unit

Prerequisites

CAUTION: Many repairs may only be done by a certified service technician. You should only perform troubleshooting and simple repairs as authorized in your product documentation, or as directed by the online or telephone service and support team. Damage due to servicing that is not authorized by Dell is not covered by your warranty. Read and follow the safety instructions that are shipped with your product.

NOTE: The maximum output power (shown in watts) is listed on the PSU label.

1. Follow the safety guidelines listed in the Safety instructions section.
2. For systems that support redundant power supply units (PSUs), ensure that both the PSUs are of the same type and have the same maximum output power
3. If installed, remove the PSU blank.

Steps

1. Slide the new PSU into the chassis until the PSU is fully seated and the release latch snaps into place.

   NOTE: If you unlatched the cable management arm, relatch it. For information about the cable management arm, see the rack documentation of your system.

2. Connect the power cable to the PSU and plug the cable into a power outlet.

   CAUTION: When connecting the power cable, secure the cable with the strap.

   NOTE: When installing, hot swapping, or hot-adding a new PSU, wait for 15 seconds for the system to recognize the PSU and determine its status. The PSU redundancy may not occur until discovery is complete. Wait until the new

PSU is discovered and enabled before you remove the other PSU. The PSU status indicator turns green to signify that the PSU is functioning properly.

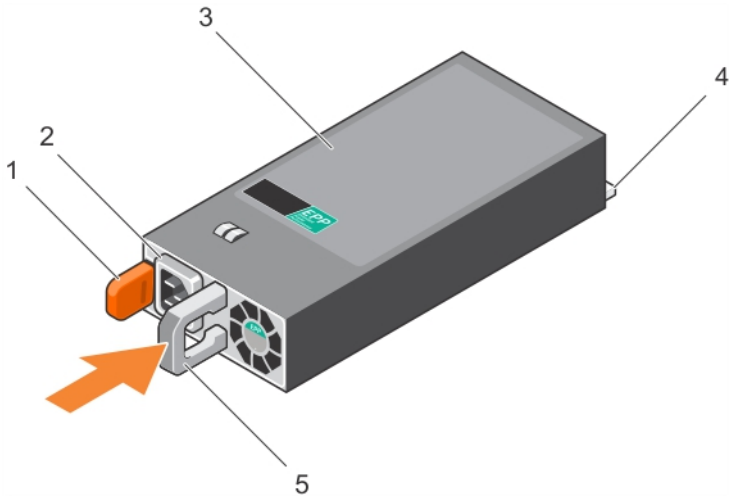

Figure 64. Installing an AC PSU

1. release latch
2. PSU cable connector
3. PSU
4. power connector
5. PSU handle

Related tasks

Before working inside your system
After working inside your system
Removing an AC power supply unit

Related reference

Safety instructions

Non-redundant AC power supply unit (cabled)

Your system supports a cabled non-redundant 450 W AC power supply unit (PSU).

NOTE: When selecting or upgrading your system configuration, verify the system power consumption with the Dell Energy Smart Solution Advisor at Dell.com/ESSA to ensure optimum power utilization.

Removing a non redundant AC power supply unit cabled)

Prerequisites

CAUTION: Many repairs may only be done by a certified service technician. You should only perform troubleshooting and simple repairs as authorized in your product documentation, or as directed by the online or telephone service and support team. Damage due to servicing that is not authorized by Dell is not covered by your warranty. Read and follow the safety instructions that are shipped with your product.

1. Follow the safety guidelines listed in the Safety instructions section.
2. Follow the procedure listed in the Before working inside your system section.
3. Remove the cooling shroud.

   NOTE: If applicable, close the expansion card latch on the cooling shroud to release the full length card.
4. If applicable, disconnect the power or data cables from expansion card (s).
5. If applicable, remove the expansion-card riser

Steps

1. Disconnect the power cable from the power source.
2. Disconnect the power cable from the power supply unit (PSU) and remove the power cables from the cable strap.
3. Disconnect all the power cables from the PSU to the system board and hard drive backplane.
4. Remove the screw securing the PSU to the chassis and slide the PSU out of the PSU cage.

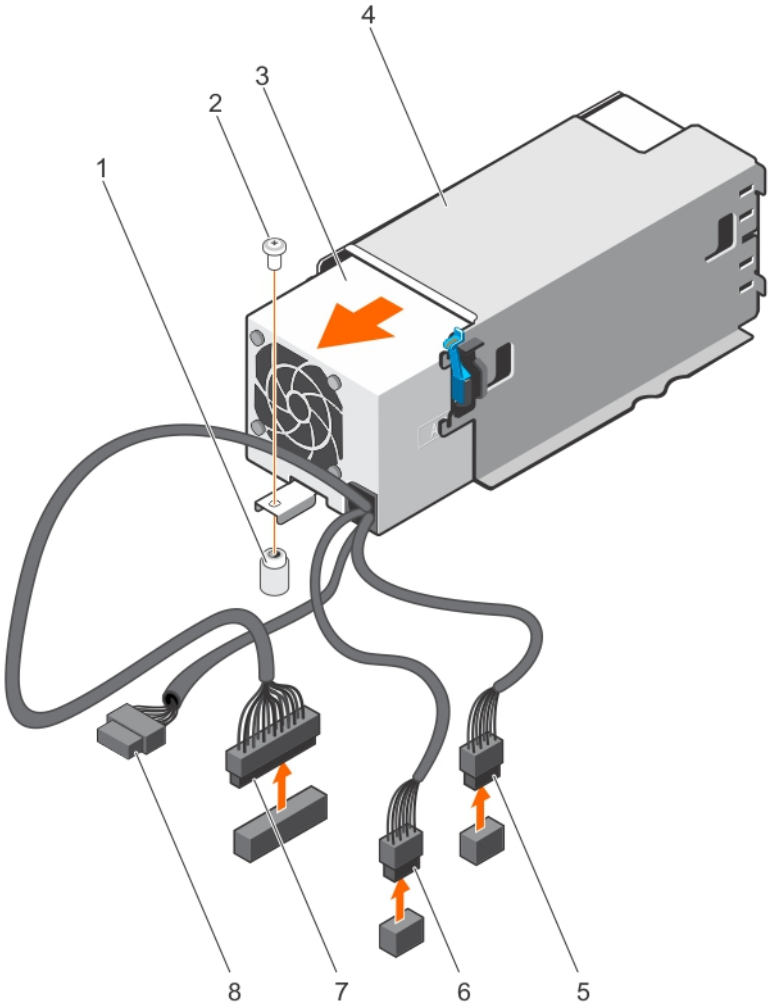

Figure 65. Removing a non-redundant AC PSU (cabled)

1. standoff on the chassis
2. screw
3. non-redundant PSU
4. PSU cage
5. P1 cable connector
6. P2 cable connector
7. P3 cable connector
8. backplane connector

Next steps

1. If applicable, install the PCIe expansion card riser.
2. If applicable, connect the required power or data cables to the expansion card(s).
3. Reinstall the cooling shroud.
4. If applicable open the expansion card latch on the cooling shroud to secure the full length expansion card.
5. Connect the power cable to the back of the PSU unit and secure the power cables to the cable strap.
6. Reconnect the power cable to the power source.
7. Follow the procedure listed in the After working inside your system section.

Related tasks

Before working inside your system

After working inside your system

Removing the cooling shroud
Removing the optional expansion card riser
Installing the optional expansion card riser
Installing the cooling shroud

Related reference

Safety instructions

Installing a non redundant AC power supply unit (cabled)

Prerequisites

CAUTION: Many repairs may only be done by a certified service technician. You should only perform troubleshooting and simple repairs as authorized in your product documentation, or as directed by the online or telephone service and support team. Damage due to servicing that is not authorized by Dell is not covered by your warranty. Read and follow the safety instructions that are shipped with your product.

1. Follow the safety guidelines listed in the Safety instructions section.
2. Follow the procedure listed in the Before working inside your system section.
3. Remove the cooling shroud.

   NOTE: If applicable, close the expansion card latch on the cooling shroud to release the full length card.
4. If applicable, disconnect the power or data cables from expansion card (s).
5. If applicable, remove the expansion card riser

Steps

1. Unpack the new power supply unit (PSU).
2. Slide the new PSU into the PSU cage until the PSU is fully seated.
3. Tighten the screw to secure the PSU to the chassis.
4. Connect all the power cables to the system board and hard drive backplane.

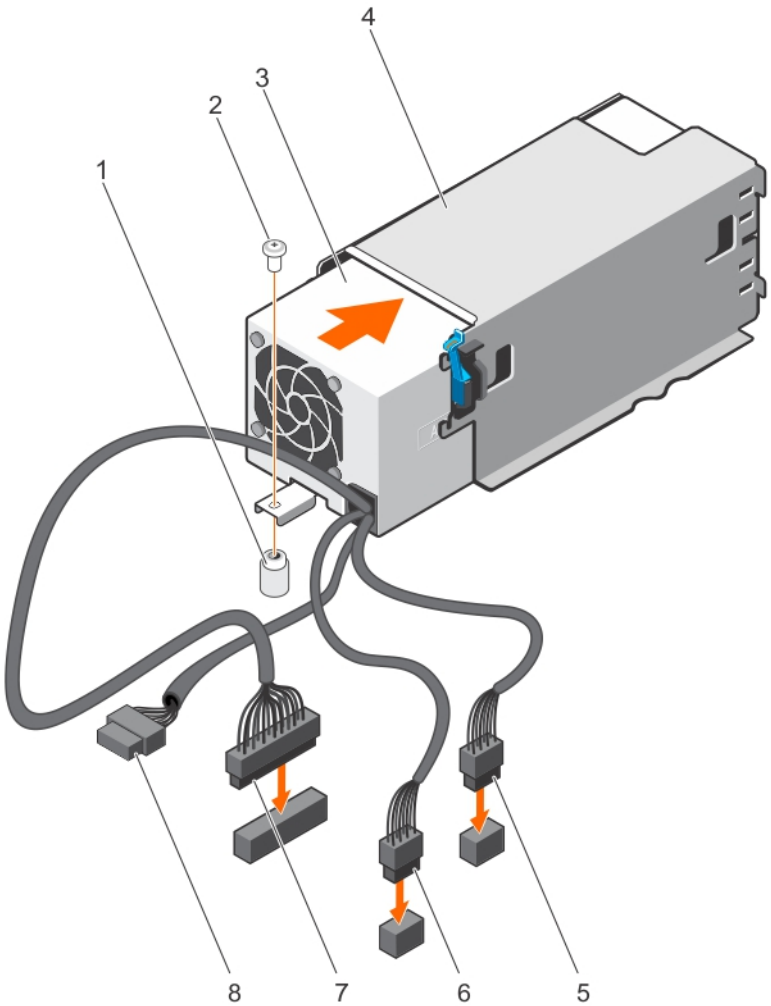

Figure 66. Installing a non redundant AC PSU

1. standoff on the chassis
2. screw
3. non-redundant PSU
4. PSU unit cage
5. P1 cable connector
6. P2 cable connector
7. P3 cable connector
8. backplane connector

Next steps

1. If applicable, install the PCIe expansion card riser.
2. If applicable, connect the required power or data cables to the expansion card(s).
3. Reinstall the cooling shroud.
4. If applicable open the expansion card latch on the cooling shroud to secure the full length expansion card.
5. Follow the procedure listed in the After working inside your system section.

Related tasks

Before working inside your system
After working inside your system
Removing the cooling shroud
Removing the optional expansion card riser
Installing the optional expansion card riser
Installing the cooling shroud

Related reference

Safety instructions

Wiring instructions for a DC power supply unit

Your system supports up to two –(48–60) V DC power supply units (PSUs).

NOTE: For equipment using –(48–60) V DC power supply units (PSUs), a qualified electrician must perform all connections to DC power and to safety grounds. Do not attempt connecting to DC power or installing grounds yourself. All electrical wiring must comply with applicable local or national codes and practices. Damage due to servicing that is not authorized by Dell is not covered by your warranty. Read and follow all safety instructions that came with the product.

CAUTION: Wire the unit with copper only, unless otherwise specified, use only 10 American Wire Gauge (AWG) wire rated minimum 90 ºC for source and return. Protect the –(48–60) V DC (1 wire) with a branch circuit over-current protection rated 50 A for DC with a high interrupt current rating.

CAUTION: Connect the equipment to a –(48–60) V DC supply source that is electrically isolated from the AC source (reliably grounded –(48–60) V DC SELV source). Ensure that the –(48–60) V DC source is efficiently secured to earth (ground).

NOTE: A readily accessible disconnect device that is suitably approved and rated shall be incorporated in the field wiring.

Input requirements

- Supply voltage: –(48–60) V DC
- Current consumption: 32 A (maximum)

Kit contents

- Dell part number 6RYJ9 terminal block or equivalent (1)
- #6-32 nut equipped with lock washer (1)

Required tools

Wire-stripper pliers capable of removing insulation from size 10 AWG solid or stranded, insulated copper wire

NOTE: Use alpha wire part number 3080 or equivalent (65/30 stranding)

Required wires

- One UL 10 AWG, 2 m maximum (stranded) black wire [–(48–60) V DC]
- One UL 10 AWG, 2 m maximum (stranded) red wire (V DC return)
- One UL 10 AWG, 2 m maximum green/yellow, green with a yellow stripe, stranded wire (safety ground)

Assembling and connecting the safety ground wire

Prerequisites

NOTE: For equipment using –(48–60) V DC power supply units (PSUs), a qualified electrician must perform all connections to DC power and to safety grounds. Do not attempt connecting to DC power or installing grounds yourself. All electrical wiring must comply with applicable local or national codes and practices. Damage due to servicing that is not authorized by Dell is not covered by your warranty. Read and follow all safety instructions that came with the product.

Steps

1. Strip the insulation from the end of the green or yellow wire, exposing approximately 4.5 mm (0.175 inch) of copper wire.
2. Using a hand-crimping tool (Tyco Electronics, 58433-3 or equivalent), crimp the ring-tongue terminal (Jeeson Terminals Inc., R5-4SA or equivalent) to the green or yellow wire (safety ground wire).
3. Connect the safety ground wire to the grounding post on the back of the system by using a #6-32 nut equipped with a locking washer.

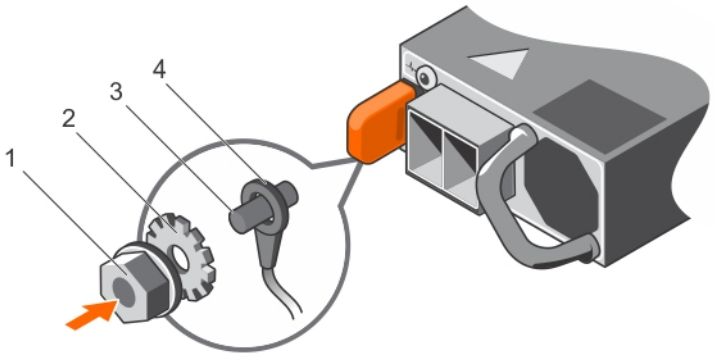

Figure 67. Assembling and connecting the safety ground wire

1. #6-32 nut
2. spring washer
3. grounding post
4. safety ground wire

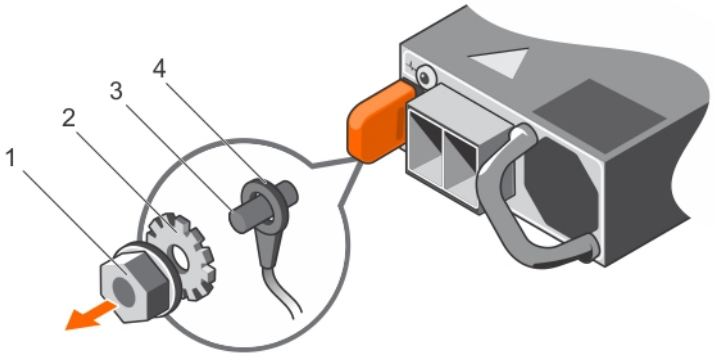

Figure 68. Removing the safety ground wire

1. #6-32 nut
2. spring washer
3. grounding post
4. safety ground wire

Assembling the DC input power wires

Prerequisites

NOTE: For equipment using –(48–60) V DC power supply units (PSUs), a qualified electrician must perform all connections to DC power and to safety grounds. Do not attempt connecting to DC power or installing grounds yourself. All electrical wiring must comply with applicable local or national codes and practices. Damage due to servicing that is not authorized by Dell is not covered by your warranty. Read and follow all safety instructions that came with the product.

Steps

1. Strip the insulation from the ends of the DC power wires, exposing approximately 13 mm (0.5 inch) of copper wire.

   NOTE: Reversing polarity when connecting DC power wires can permanently damage the power supply or the system.

2. Insert the copper ends into the mating connectors and tighten the captive screws at the top of the mating connector by using a Phillips #2 screwdriver.

   NOTE: To protect the power supply from electrostatic discharge, the captive screws must be covered with the rubber cap before inserting the mating connector into the power supply.

3. Rotate the rubber cap clockwise to fix it over the captive screws.

4. Insert the mating connector into the PSU.

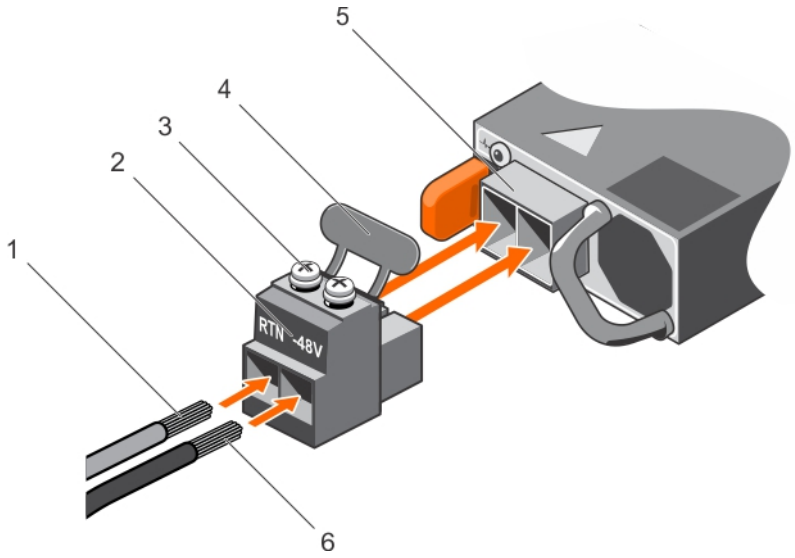

Figure 69. Assembling the DC Input Power Wires

1. DC wire RTN
2. DC power connector
3. captive screw (2)
4. rubber cap
5. DC power socket
6. DC wire –48 V

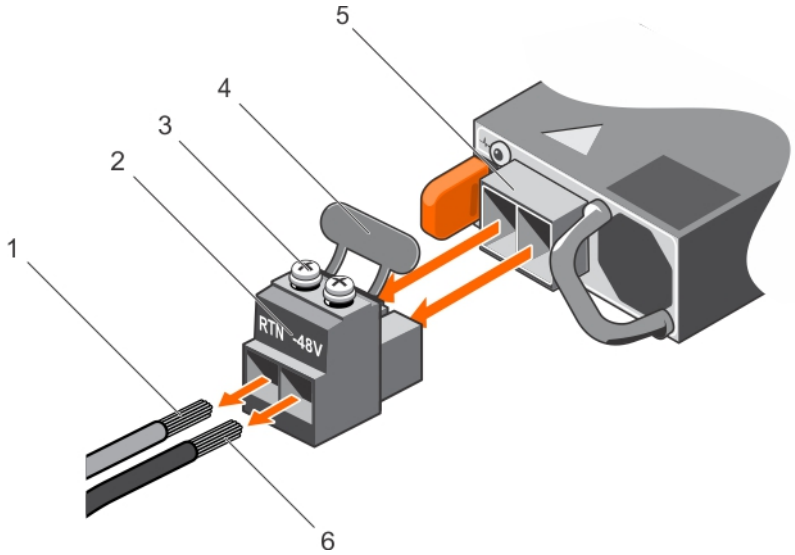

Figure 70. Removing the DC Input Power Wires

1. wire RTN
2. DC power connector
3. captive screw (2)
4. rubber cap
5. DC power socket
6. wire –48 V

Removing a DC power supply unit

Prerequisites

NOTE: For equipment using –(48–60) V DC power supply units (PSUs), a qualified electrician must perform all connections to DC power and to safety grounds. Do not attempt connecting to DC power or installing grounds yourself. All electrical wiring must comply with applicable local or national codes and practices. Damage due to servicing that is not authorized by Dell is not covered by your warranty. Read and follow all safety instructions that came with the product.

CAUTION: The system needs one power supply for normal operation. On power-redundant systems, remove and replace only one power supply at a time in a system that is powered on.

NOTE: You may have to unlatch and lift the optional cable management arm if it interferes with power supply removal. For information about the cable management arm, see the rack documentation of your system.

Steps

1. Disconnect the power wires from the power source and the connector from the PSU you intend to remove.
2. Disconnect the safety ground wire.
3. Press the release latch and slide the PSU out of the chassis by using the PSU handle.

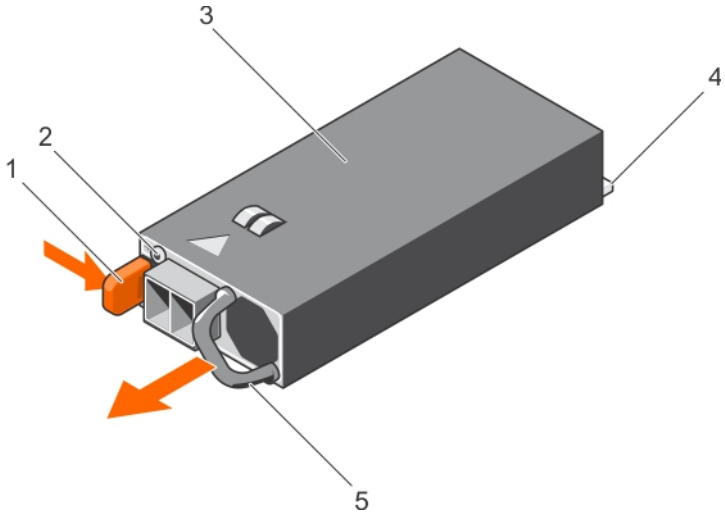

Figure 71. Removing a DC PSU

1. release latch
2. power supply status indicator
3. PSU
4. power connector
5. PSU handle

Related tasks

Before working inside your system
After working inside your system

Related reference

Safety instructions

Installing a DC power supply unit

Prerequisites

NOTE: For equipment using –(48–60) V DC power supply units (PSUs), a qualified electrician must perform all connections to DC power and to safety grounds. Do not attempt connecting to DC power or installing grounds yourself. All electrical wiring must comply with applicable local or national codes and practices. Damage due to servicing that is not authorized by Dell is not covered by your warranty. Read and follow all safety instructions that came with the product.

1. Follow the safety guidelines listed in the Safety instructions section.
2. Follow the procedure listed in the Before working inside your system section.
3. If installed, remove the PSU blank.
4. Verify that both the PSUs are of the same type and have the same maximum output power.

   NOTE: The maximum output power (shown in watts) is listed on the PSU label.

Steps

1. Slide the PSU into the chassis until the PSU is fully seated and the release latch snaps into place.

   NOTE: If you have unlatched the cable management arm, relatch it. For information about the cable management arm, see the system's rack documentation.

2. Connect the safety ground wire.
3. Install the DC power connector in the PSU.

   CAUTION: When connecting the power wires, ensure that you secure the wires with the strap to the PSU handle.

4. Connect the wires to a DC power source.

   NOTE: When installing, hot-swapping, or hot-adding a new PSU, wait for 15 seconds for the system to recognize the PSU and determine its status. The PSU status indicator turns green to signify that the PSU is functioning properly.

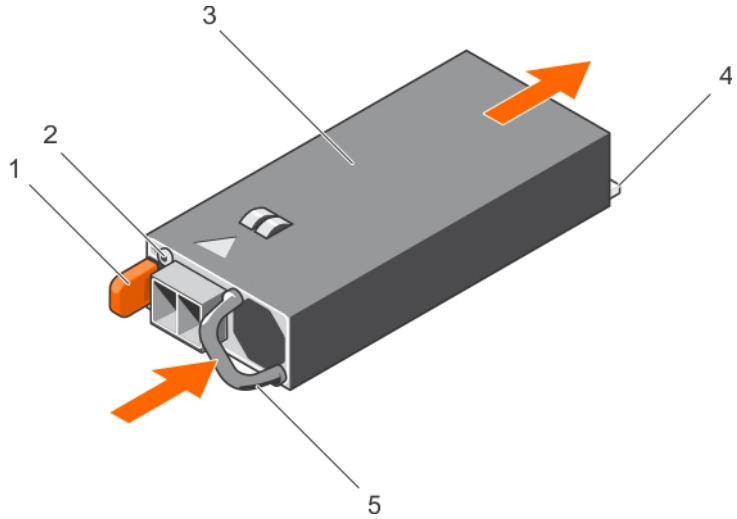

Figure 72. Installing a DC PSU

1. release latch
2. power supply status indicator
3. PSU
4. power connector
5. PSU handle

Next steps

- Follow the procedure listed in the After working inside your system section.

Related tasks

Before working inside your system
After working inside your system

Related reference

Safety instructions

Power interposer board

The power interposer board (PIB) is a board that connects the redundant power supply units (PSUs) to the system board. The PIB is only supported in systems with redundant PSUs.

Removing the power interposer board

Prerequisites

CAUTION: Many repairs may only be done by a certified service technician. You should only perform troubleshooting and simple repairs as authorized in your product documentation, or as directed by the online or telephone service and support team. Damage due to servicing that is not authorized by Dell is not covered by your warranty. Read and follow the safety instructions that are shipped with your product.

1. Follow the safety guidelines listed in the Safety instructions section.
2. Follow the procedure listed in the Before working inside your system section.
3. Remove the cooling shroud.

   NOTE: If applicable, close the expansion card latch on the cooling shroud to release the full length card.
4. If applicable, disconnect the power or data cables from expansion card(s).
5. If applicable, remove the expansion card riser

CAUTION: To prevent damage to the power interposer board, you must remove the power supply module(s) or power supply blank from the system before removing the power interposer board or power distribution board.

Steps

1. Remove the power supply module(s) from the back of the chassis.
2. Disconnect the power cables from the hard drive backplane and the system board.
3. Press the release latch on the PIB to release it from the hooks on the power supply unit cage.
4. Lift the PIB up and out of the chassis.

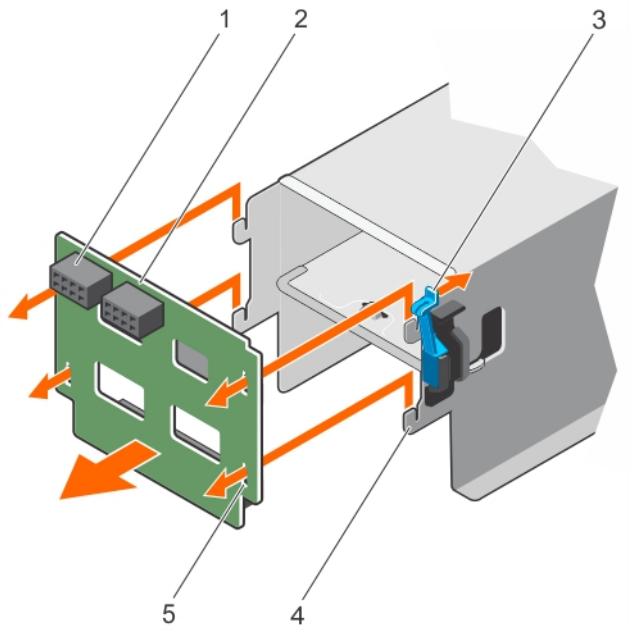

Figure 73. Removing the power interposer board

1. GPU power connector
2. power interposer board
3. release latch
4. hooks (4)
5. locking slots (4)

Next steps

1. Install the replacement power interposer board and connect all the required cables to the system board and the hard drive backplane.
2. If applicable, install the PCIe expansion card riser.
3. If applicable, connect the required power or data cables to the expansion card(s).
4. Reinstall the cooling shroud.
5. If applicable open the expansion card latch on the cooling shroud to secure the full length expansion card.
6. Follow the procedure listed in the After working inside your system section.

Related tasks

Before working inside your system
After working inside your system
Removing the cooling shroud
Removing the optional expansion card riser
Installing the power interposer board
Installing the optional expansion card riser
Installing the cooling shroud

Related reference

Safety instructions

Installing the power interposer board

Prerequisites

CAUTION: Many repairs may only be done by a certified service technician. You should only perform troubleshooting and simple repairs as authorized in your product documentation, or as directed by the online or telephone service and support team. Damage due to servicing that is not authorized by Dell is not covered by your warranty. Read and follow the safety instructions that are shipped with your product.

1. Follow the safety guidelines listed in the Safety instructions section.
2. Follow the procedure listed in the Before working inside your system section.
3. Remove the cooling shroud.

   NOTE: If applicable, close the expansion card latch on the cooling shroud to release the full length card.
4. If applicable, disconnect the power or data cables from expansion card (s).
5. If applicable, remove the expansion card riser

Steps

1. Align the locking slots on the power interposer board with the hooks on the power supply cage and slide it into place.
2. Route the power cables as applicable, and connect the power cables to the system board and hard drive backplane.
3. Install the power supply module(s) in their original locations.

Next steps

1. If applicable, install the PCIe expansion card riser.
2. If applicable, connect the required power or data cables to the expansion card(s).
3. Reinstall the cooling shroud.
4. If applicable, open the expansion card latch on the cooling shroud to secure the full length expansion card.
5. Follow the procedure listed in the After working inside your system section.

Related tasks

Before working inside your system
After working inside your system
Removing the cooling shroud
Removing the optional expansion card riser

Removing the power interposer board
Installing the optional expansion card riser
Installing the cooling shroud

Related reference

Safety instructions

System battery

The system battery is used for low-level system functions like powering the real-time clock and storing the computer's BIOS settings.

Replacing the system battery

Prerequisites

NOTE: There is a danger of a new battery exploding if it is incorrectly installed. Replace the battery only with the same or equivalent type recommended by the manufacturer. For more information, see the safety information that shipped with your system.

CAUTION: Many repairs may only be done by a certified service technician. You should only perform troubleshooting and simple repairs as authorized in your product documentation, or as directed by the online or telephone service and support team. Damage due to servicing that is not authorized by Dell is not covered by your warranty. Read and follow the safety instructions that are shipped with your product.

1. Follow the safety guidelines listed in the Safety instructions section.
2. Follow the procedure listed in the Before working inside your system section.
3. Remove the cooling shroud.
4. If installed, remove the expansion card riser.

Steps

1. Locate the battery socket. For more information, see the Jumpers and connectors section.

   CAUTION: To avoid damage to the battery connector, you must firmly support the connector while installing or removing a battery.

2. Place your finger between the securing tabs at the negative side of the battery connector and lift the battery out of the socket.

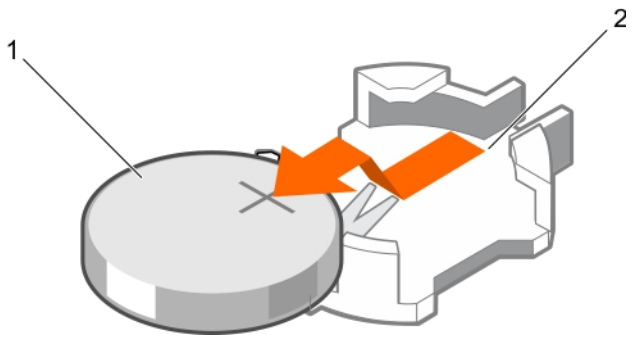

Figure 74. Removing the system battery

a. system battery
b. system battery slot

3. To install a new system battery, hold the battery with the "+" facing up and slide it under the securing tabs.
4. Press the battery into the connector until it snaps into place.

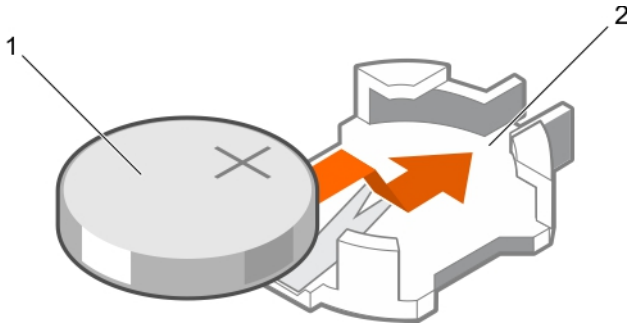

Figure 75. Installing the system battery

a. system battery
b. system battery slot

Next steps

1. Install the cooling shroud.
2. If removed, install the expansion card riser.
3. Follow the procedure listed in the After working inside your system section.
4. While booting, press F2 to enter System Setup and ensure the battery is operating properly.
5. Enter the correct time and date in the System Setup **Time** and **Date** fields.
6. Exit System Setup.

Related tasks

Before working inside your system
After working inside your system
Removing the cooling shroud
Removing the optional expansion card riser
Installing the optional expansion card riser
Installing the cooling shroud

Related reference

Safety instructions
System board connectors

Hard drive backplane

Your 12 hard drive system supports 3.5-inch (x8) SAS/SATA backplane.

Removing the hard drive backplane

Prerequisites

CAUTION: Many repairs may only be done by a certified service technician. You should only perform troubleshooting and simple repairs as authorized in your product documentation, or as directed by the online or telephone service and support team. Damage due to servicing that is not authorized by Dell is not covered by your warranty. Read and follow the safety instructions that are shipped with your product.

CAUTION: To prevent damage to the hard drives and hard drive backplane, you must remove the hard drives from the system before removing the hard drive backplane.

CAUTION: You must note the number of each hard drive and temporarily label them before removal so that you can replace them in the same locations.

1. Follow the safety guidelines listed in the Safety instructions section.
2. Follow the procedure listed in the Before working inside your system section.

Steps

1. Disconnect the SAS/SATA/SSD hard drives, data cable(s) and power cable from the hard drive backplane.
2. Press the hard drive backplane release tabs to disengage the backplane from the chassis.
3. Pull the hard drive backplane away from the system until the securing hooks on the system chassis are free from the slots on the hard drive backplane.

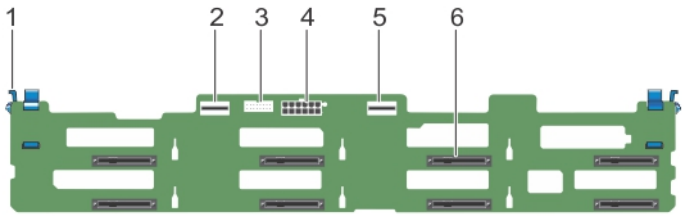

Figure 76. Removing the hard drive backplane

1. release tab (2)
2. SAS A connector
3. backplane signal connector
4. backplane power connector
5. SAS B connector
6. hard drive connectors (8)

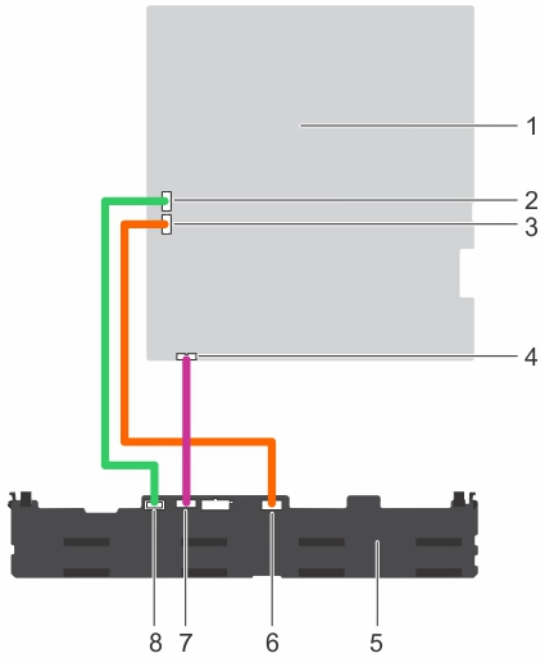

Figure 77. Cabling diagram of the hard drive backplane using the onboard controller

1. system board
2. SATA A cable connector on system board
3. SATA B cable connector on system board
4. signal cable connector on system board
5. hard drive backplane
6. SAS B cable connector on backplane
7. signal cable connector on backplane
8. SAS A cable connector on backplane

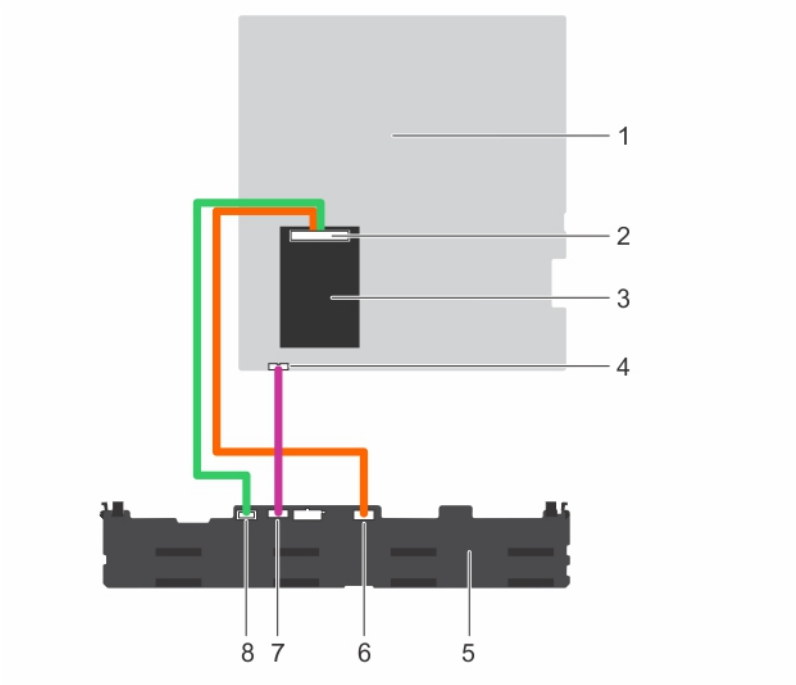

Figure 78. Cabling diagram of the hard drive backplane using the integrated storage controller

1. system board
2. integrated storage controller connector
3. integrated storage controller
4. signal cable connector on system board
5. hard drive backplane
6. SAS B cable connector on backplane
7. signal cable connector on backplane
8. SAS A cable connector on backplane

Next steps

1. Reconnect the data cable(s) and power cable to the hard drive backplane
2. Install all SAS/SATA/SSD hard drives into their original locations.
3. Follow the procedure listed in the After working inside your system section.

Related tasks

Before working inside your system
After working inside your system
Removing a hot swappable hard drive or SSD
Installing a hot-swap hard drive

Related reference

Safety instructions

Installing the hard drive backplane

Prerequisites

1. Follow the safety guidelines listed in the Safety instructions section.
2. Follow the procedure listed in the Before working inside your system section.
3. Disconnect the data, signal and power cables to the backplane.
4. Remove all SAS/SATA/SSD hard drives.

CAUTION: Many repairs may only be done by a certified service technician. You should only perform troubleshooting and simple repairs as authorized in your product documentation, or as directed by the online or telephone service and support team. Damage due to servicing that is not authorized by Dell is not covered by your warranty. Read and follow the safety instructions that are shipped with your product.

Steps

1. Use the hooks on the chassis as guides to align the hard drive backplane to the chassis.
2. Lower the hard drive backplane until the release tabs snap into place.
3. Connect the SAS/SATA/SSD data, signal, and power cable(s) to the backplane.

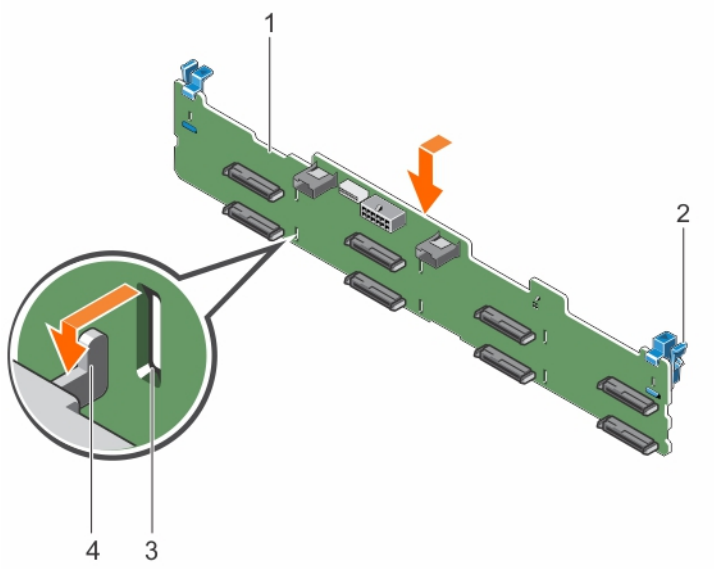

Figure 79. Installing the hard drive backplane

1. backplane
2. release tab (2)
3. slot on the backplane
4. hook on the chassis

Next steps

1. Install all SAS/SATA/SSD hard drives in their original locations.
2. Reconnect the data, signal and power cables to the backplane.
3. Follow the procedure listed in the After working inside your system section.

Related tasks

Before working inside your system
After working inside your system
Removing a hot swappable hard drive or SSD
Installing a hot-swap hard drive

Related reference

Safety instructions

Control panel

The control panel contains the power button, the diagnostic indicators, and the front USB ports.

Removing the control panel board

Prerequisites

CAUTION: Many repairs may only be done by a certified service technician. You should only perform troubleshooting and simple repairs as authorized in your product documentation, or as directed by the online or telephone service and support team. Damage due to servicing that is not authorized by Dell is not covered by your warranty. Read and follow the safety instructions that are shipped with your product.

CAUTION: The display module connector is a ZIF (zero insertion force) connector. Ensure that the locking tab on the connector is released before removal and insertion. The locking tab must be engaged after insertion.

NOTE: To prevent damage to the LCD display module cable, do not bend the control panel flex cable after it is inserted into the connector.

1. Follow the safety guidelines listed in the Safety instructions section.
2. Follow the procedure listed in the Before working inside your system section.

Steps

1. Disconnect the USB cable, control panel cable, and the LCD display module cable from the control panel board.
2. Using a Phillips #2 screwdriver, remove the two screws that secure the control panel board to the chassis.
3. Slide the control panel board toward the back and lift it out of the system.

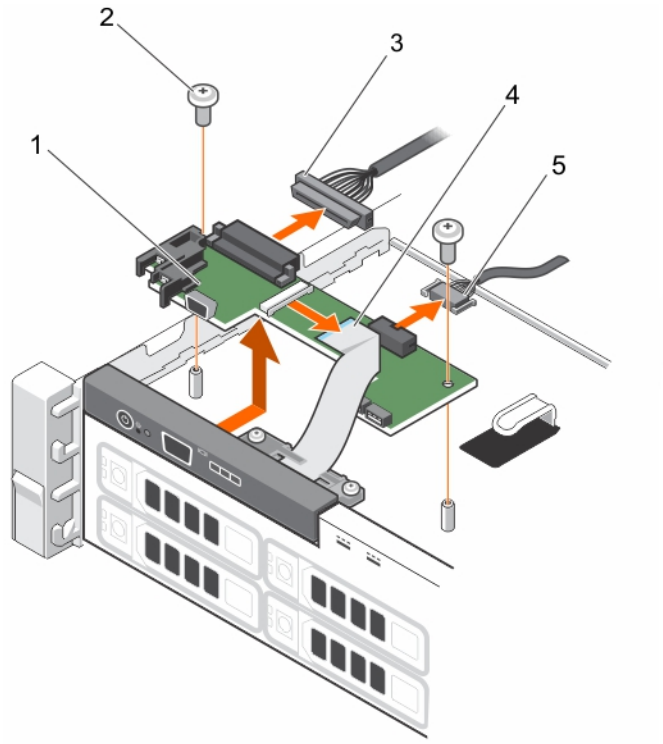

Figure 80. Removing the control panel board

1. control panel board
2. screws (2)
3. control panel data cable
4. LCD display module cable
5. USB cable

Next steps

1. Reconnect the USB cable, control panel cable, and the LCD display module cable to the control panel board.
2. Follow the procedure listed in the After working inside your system section.

Related tasks

Before working inside your system
After working inside your system

Related reference

Safety instructions

Installing the control panel board

Prerequisites

CAUTION: Many repairs may only be done by a certified service technician. You should only perform troubleshooting and simple repairs as authorized in your product documentation, or as directed by the online or telephone service and support team. Damage due to servicing that is not authorized by Dell is not covered by your warranty. Read and follow the safety instructions that are shipped with your product.

1. Follow the safety guidelines listed in the Safety instructions section.
2. Follow the procedure listed in the Before working inside your system section.
3. Keep the Phillips #2 screwdriver ready.

Steps

1. Fit the control panel board in the chassis, while aligning the screw holes on the control panel board with the standoffs on the chassis.
2. Secure the control panel board to the chassis with the two screws.

   CAUTION: The display module connector is a ZIF (zero insertion force) connector. Ensure that the locking tab on the connector is released before removal and insertion. The locking tab must be engaged after insertion.
3. Connect the USB cable, control panel cable, and the display module cable to the control panel board.
4. Route the power and data cables through the cable retention bracket.

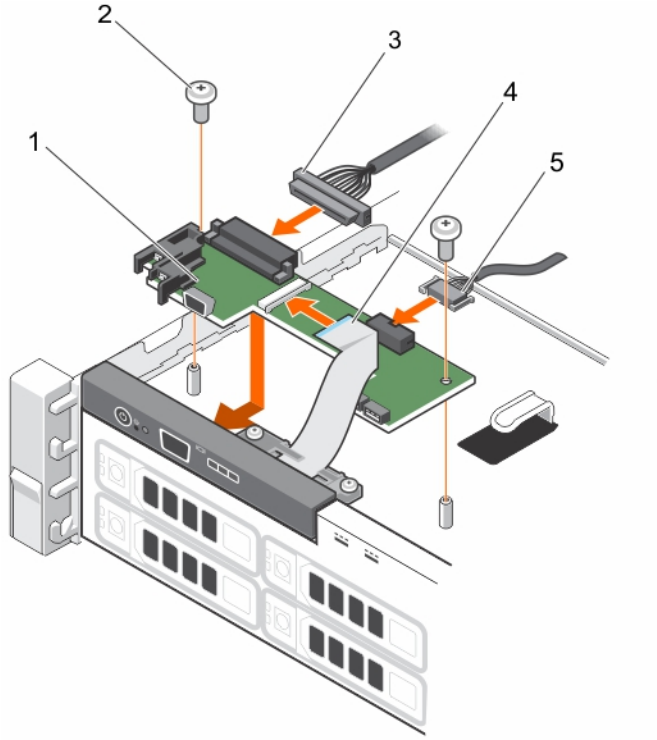

Figure 81. Installing the control panel board

1. control panel board
2. screws (2)
3. control panel data cable
4. LCD display module cable
5. USB cable

Next steps

1. Follow the procedure listed in the After working inside your system section.

Related tasks

Before working inside your system

After working inside your system

Related reference

Safety instructions

Removing the control panel

Prerequisites

CAUTION: Many repairs may only be done by a certified service technician. You should only perform troubleshooting and simple repairs as authorized in your product documentation, or as directed by the online or telephone service and support team. Damage due to servicing that is not authorized by Dell is not covered by your warranty. Read and follow the safety instructions that are shipped with your product.

1. Follow the safety guidelines listed in the Safety instructions section.
2. Follow the procedure listed in the Before working inside your system section.

   CAUTION: The display module connector is a ZIF (zero insertion force) connector. Ensure that the locking tab on the connector is released before removal and insertion. The locking tab must be engaged after insertion.
3. Keep the Phillips #2 screwdriver ready.

Steps

1. Disconnect the display module cable from the control panel board.

   NOTE: The control panel has seven tabs that secure it to the chassis.

   CAUTION: Applying excessive force may damage the control panel.
2. Slide the display module cable out of the plastic cable guide.
3. Remove the cable guide after unscrewing the two retaining screws.
4. Hold the top edge of the control panel at the corners and pull upward until the control panel tabs release.
5. Pull the control panel away from the chassis.

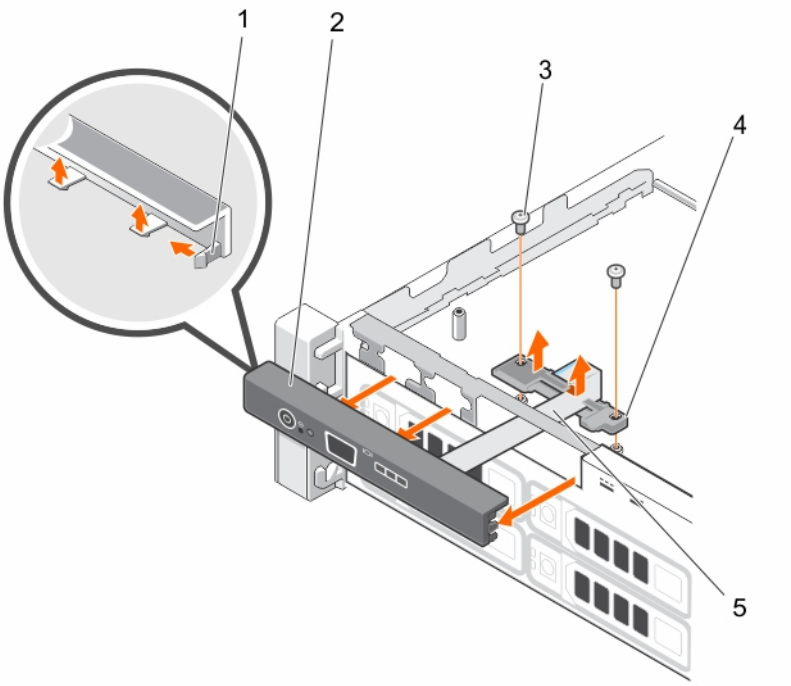

Figure 82. Removing the control panel

1. locks on the control panel (7)
2. control panel
3. cable guide retaining screw (2)
4. cable guide

5. display module cable

Next steps

1. Reconnect the display module cable to the control panel board
2. Follow the procedure listed in the After working inside your system section.

Related tasks

Before working inside your system
After working inside your system

Related reference

Safety instructions

Installing the control panel

Prerequisites

CAUTION: Many repairs may only be done by a certified service technician. You should only perform troubleshooting and simple repairs as authorized in your product documentation, or as directed by the online or telephone service and support team. Damage due to servicing that is not authorized by Dell is not covered by your warranty. Read and follow the safety instructions that are shipped with your product.

1. Follow the safety guidelines listed in the Safety instructions section.
2. Follow the procedure listed in the Before working inside your system section.
3. Keep the Phillips #2 screwdriver ready.

Steps

1. Slide the left side of the control panel into the chassis so that the left tab on the control panel aligns with the slot on the chassis wall and the top left tab aligns with the slot on the top of the chassis.
2. Pull the display module cable through the opening slot in the front and into the chassis.
3. Slide the display module cable into the plastic cable guide.
4. Fix the cable guide to the chassis by screwing the two retaining screws.
5. Push the right side of the control panel until the top right tab aligns with the top of the chassis and the control panel snaps into place.

   CAUTION: The display module connector is a ZIF (zero insertion force) connector. Ensure that the locking tab on the connector is released before removal and insertion. The locking tab must be engaged after insertion.
6. Connect the display module cable to the control panel board.

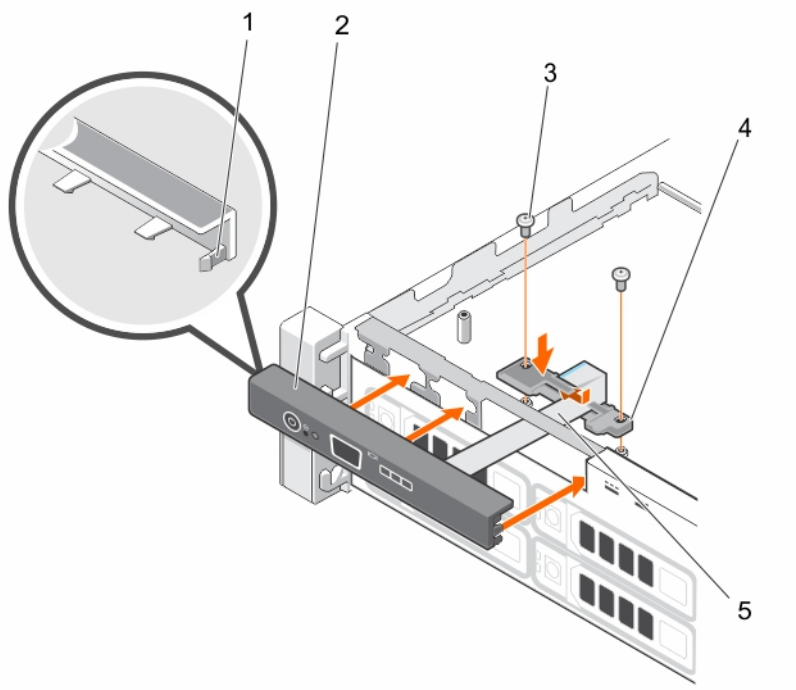

Figure 83. Installing the control panel

1. locks on the control panel (7)
2. control panel
3. cable guide retaining screw (2)
4. cable guide
5. display module cable

Next steps

- Follow the procedure listed in the After working inside your system section.

Related tasks

Before working inside your system
After working inside your system

Related reference

Safety instructions

System board

A system board (also known as the motherboard) is the main printed circuit board found in systems. The system board allows communication between many of the crucial electronic components of the system, such as the central processing unit (CPU) and memory, and also provides connectors for other peripherals. Unlike a backplane, a system board contains significant number of sub-systems such as the processor expansion cards, and other components.

Removing the system board

Prerequisites

CAUTION: Many repairs may only be done by a certified service technician. You should only perform troubleshooting and simple repairs as authorized in your product documentation, or as directed by the online or telephone service and support team. Damage due to servicing that is not authorized by Dell is not covered by your warranty. Read and follow the safety instructions that are shipped with your product.

CAUTION: If you are using the Trusted Program Module (TPM) with an encryption key, you may be prompted to create a recovery key during program or System Setup. Be sure to create and safely store this recovery key. If you replace this

system board, you must supply the recovery key when you restart your system or program before you can access the encrypted data on your hard drives.

1. Follow the safety guidelines listed in the Safety instructions section.
2. Follow the procedure listed in the Before working inside your system section.
3. Remove or disconnect the following components:
   a. cooling shroud
   b. cooling fans
   c. power supply(s)
   d. expansion card riser
   e. integrated storage controller card
   f. internal dual SD module
   g. internal USB key (if installed)
   h. heat sink(s)/heat sink blank(s)
   i. processors(s)/processor blank(s)

      CAUTION: To prevent damage to the processor pins when replacing a faulty system board, ensure that you cover the processor socket with the processor protective cap.

   j. memory modules and memory module blanks
4. Keep the Phillips #2 screwdriver ready.

Steps

1. Disconnect the SAS cable from the system board.
2. Disconnect all other data and power cables from the system board.

   CAUTION: Take care not to damage the system identification button while removing the system board from the chassis.

   CAUTION: Do not lift the system board by holding a memory module, processor, or other components.
3. Remove the screws securing the system board to the chassis.

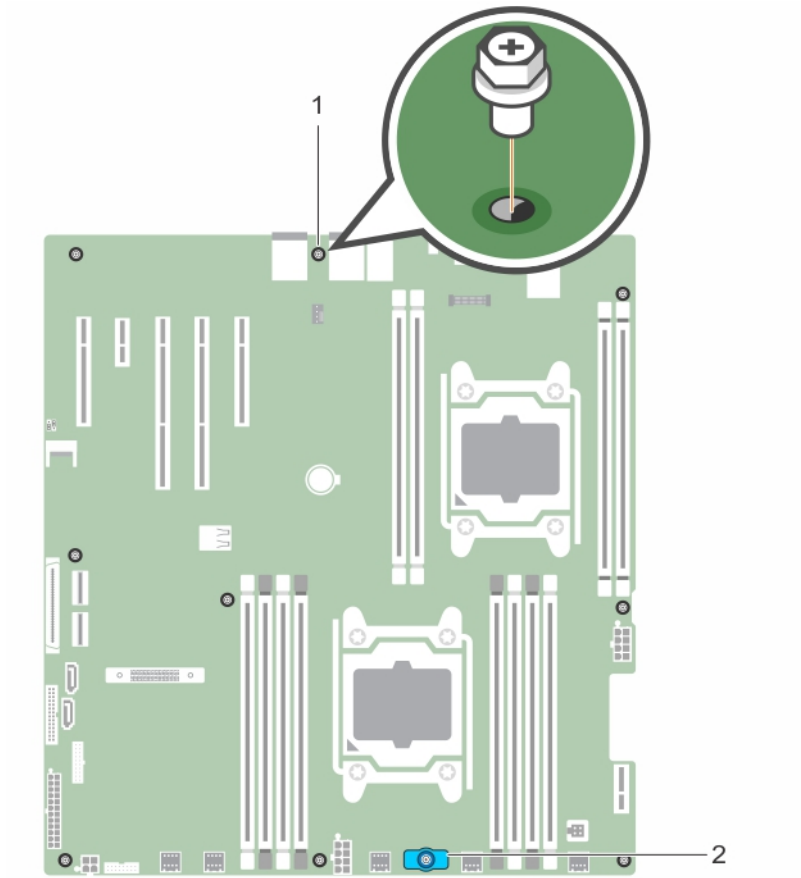

Figure 84. Screw location on the system board

a. system board screw (9)
b. system board holder

4. Hold the system board holder, lift the system board and slide it toward the front of the chassis.

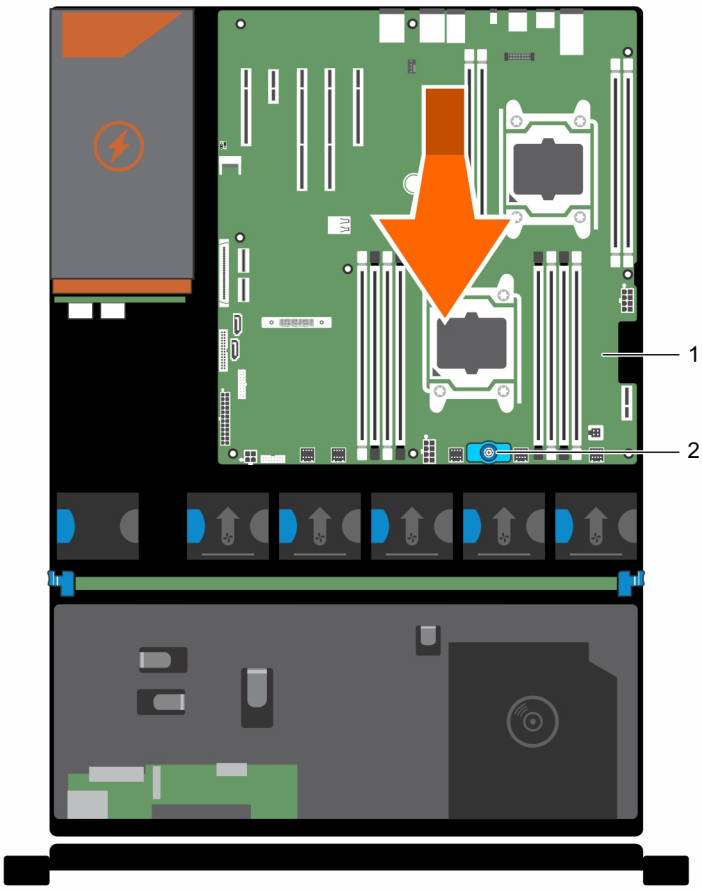

Figure 85. Removing the system board

a. system board
b. system board holder

Related tasks

Before working inside your system
After working inside your system
Removing the cooling shroud
Removing the optional expansion card riser
Removing an AC power supply unit
Removing an internal SD card
Replacing the optional internal USB memory key
Removing a processor
Removing a memory module

Related reference

Safety instructions

Installing the system board

Prerequisites

CAUTION: Many repairs may only be done by a certified service technician. You should only perform troubleshooting and simple repairs as authorized in your product documentation, or as directed by the online or telephone service and support team. Damage due to servicing that is not authorized by Dell is not covered by your warranty. Read and follow the safety instructions that are shipped with your product.

1. Follow the safety guidelines listed in the Safety instructions section.
2. Follow the procedure listed in the Before working inside your system section.
3. Keep the Phillips #2 screwdriver ready.

Steps

1. Unpack the new system board assembly.

   CAUTION: Do not lift the system board by holding a memory module, processor, or other components.

   CAUTION: Take care not to damage the system identification button while placing the system board into the chassis.

2. Hold the touch points and lower the system board into the chassis.
3. Push the system board toward the back of the chassis until the board clicks into place.

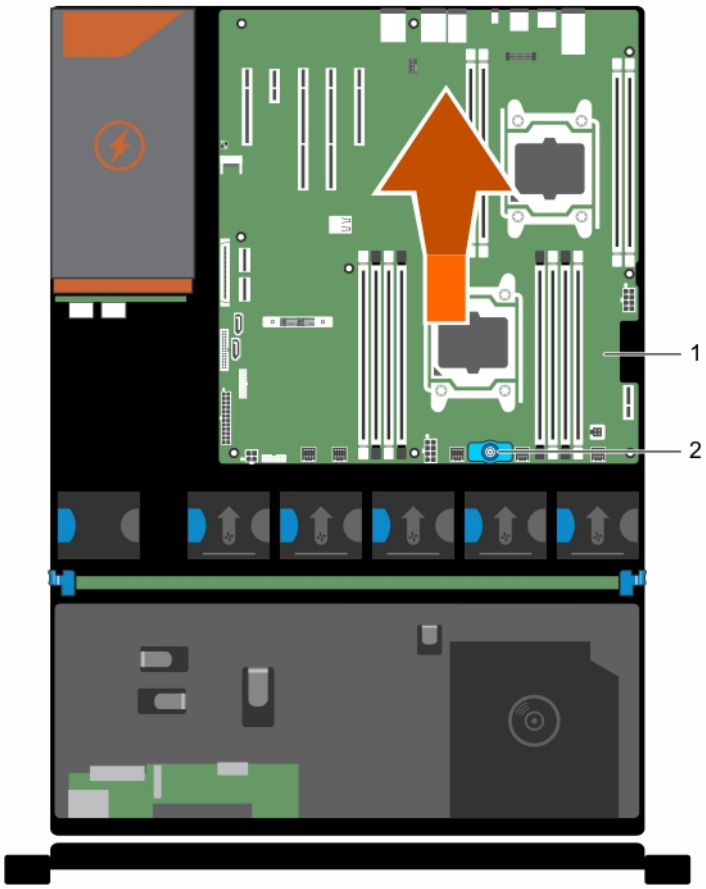

Figure 86. Installing the system board

a. system board
b. system board holder

Next steps

1. Install the Trusted Platform Module (TPM). For more information about TPM, see Trusted Platform Module.
2. Install / connect the following components:
   a. integrated storage controller card
   b. internal USB key (if installed)
   c. internal dual SD module
   d. the expansion card riser
   e. heat sink(s)/heat sink blank(s) and processors(s)/processor blank(s)
   f. memory modules and memory module blanks
   g. cooling fans
   h. cooling shroud

i. power supply unit(s)

3. Reconnect all cables to the system board.

   NOTE: Ensure that the cables inside the system are routed along the chassis wall .

4. Follow the procedure listed in the After working inside your system section.
5. Ensure that you:
   a. Use the Easy Restore feature to restore the service tag, iDRAC license, ID modules, and BIOS settings.
   b. If Easy Restore does not function, enter the system service tag manually and import your new or existing iDRAC Enterprise license. For more information, see Integrated Dell Remote Access Controller 8 (iDRAC8) User's Guide, at **Dell.com/esmmanuals**.
   c. Update the BIOS and iDRAC versions.
   d. Re-enable the Trusted Platform Module (TPM).

Related tasks

Before working inside your system
After working inside your system
Installing the Trusted Platform Module
Installing the integrated storage controller card
Replacing the optional internal USB memory key
Installing an internal SD card
Installing the optional expansion card riser
Installing a processor
Installing memory modules
Installing the cooling shroud
Installing an AC power supply unit
Restoring the Service Tag by using the Easy Restore feature
Entering the system Service Tag by using System Setup
Initializing the TPM for BitLocker users
Initializing the TPM for TXT users

Related reference

Safety instructions

Restoring the Service Tag by using the Easy Restore feature

The Easy Restore feature enables you to restore your system's Service Tag, license, UEFI configuration, and the system configuration data after replacing the system board. All data is automatically backed up in a backup flash device. If BIOS detects a new system board and the Service Tag in the backup flash device, BIOS prompts the user to restore the backup information.

Steps

1. Turn on the system.
   If BIOS detects a new system board, and if the Service Tag is present in the backup flash device, BIOS displays the Service Tag, the status of the license, and the **UEFI Diagnostics** version.
2. Perform one of the following steps:
   After the restore process is complete, BIOS prompts to restore the system configuration data.
3. Perform one of the following steps:
   - Press **Y** to restore the system configuration data.
   - Press **N** to use the default configuration settings.

   After the restore process is complete, the system restarts.

Entering the system Service Tag by using System Setup

If Easy Restore fails to restore the Service Tag, use System Setup to enter the Service Tag.

Steps

1. Turn on the system.
2. Press F2 to enter System Setup.
3. Click **Service Tag Settings**.
4. Enter the Service Tag.

   NOTE: You can enter the Service Tag only when the Service Tag field is empty. Ensure that you enter the correct Service Tag. After the Service Tag is entered, it cannot be updated or changed.
5. Click **Ok**.
6. Import your new or existing iDRAC Enterprise license.

   For more information, see the *Integrated Dell Remote Access Controller User's Guide* at **Dell.com/idracmanuals**.

Trusted Platform Module

Trusted Platform Module (TPM) is a dedicated microprocessor designed to secure hardware by integrating cryptographic keys into devices. A software can use a Trusted Platform Module to authenticate hardware devices. As each TPM chip has a unique and secret RSA key burned in as it is produced, it can perform the platform authentication.

CAUTION: Do not attempt to remove the Trusted Platform Module (TPM) from the system board. After the TPM is installed, it is cryptographically bound to that specific system board. Any attempt to remove an installed TPM breaks the cryptographic binding, and it cannot be re-installed or installed on another system board.

NOTE: This is a Field Replaceable Unit (FRU). Removal and installation procedures must be performed only by Dell certified service technicians.

Related tasks

Before working inside your system

After working inside your system

Related reference

Safety instructions

Installing the Trusted Platform Module

Prerequisites

CAUTION: Many repairs may only be done by a certified service technician. You should only perform troubleshooting and simple repairs as authorized in your product documentation, or as directed by the online or telephone service and support team. Damage due to servicing that is not authorized by Dell is not covered by your warranty. Read and follow the safety instructions that are shipped with your product.

1. Follow the safety guidelines listed in the Safety instructions section.
2. Follow the procedure listed in the Before working inside your system section.

Steps

1. Locate the TPM connector on the system board.

   NOTE: To locate the TPM connector on the system board, see the System board connectors section.
2. Align the edge connectors on the TPM with the slot on the TPM connector.
3. Insert the TPM into the TPM connector such that the plastic rivet aligns with the slot on the system board.
4. Press the plastic rivet until the rivet snaps into place.

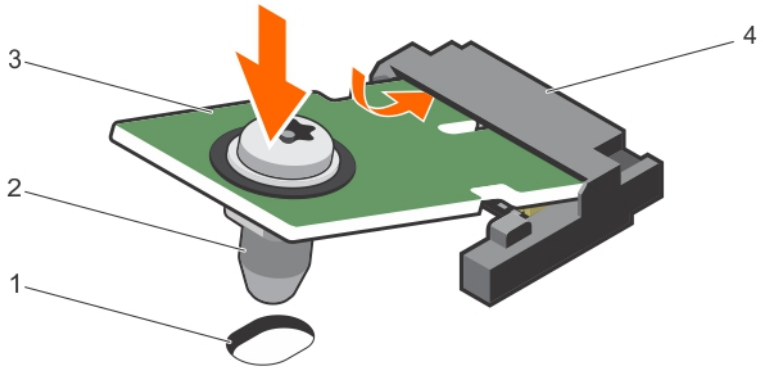

Figure 87. Installing the TPM

1. rivet slot on the system board
2. plastic rivet
3. TPM
4. TPM connector

Next steps

1. Install the system board.
2. Follow the procedure listed in the After working inside your system section.

Related tasks

Before working inside your system
After working inside your system

Related reference

Safety instructions

Initializing the TPM for BitLocker users

Steps

Initialize the TPM.

For more information about initializing the TPM, see http://technet.microsoft.com/en-us/library/cc753140.aspx.

The **TPM Status** changes to **Enabled, Activated**.

Initializing the TPM for TXT users

Steps

1. While booting your system, press F2 to enter System Setup.
2. On the **System Setup Main Menu** screen, click **System BIOS** → **System Security Settings**.
3. From the **TPM Security** option, select **On with Pre-boot Measurements**.
4. From the **TPM Command** option, select **Activate**.
5. Save the settings.
6. Restart your system.
7. Enter **System Setup** again.
8. On the **System Setup Main Menu** screen, click **System BIOS** → **System Security Settings**.
9. From the **Intel TXT** option, select **On**.

7

Troubleshooting your system

Safety first — for you and your system

CAUTION: Many repairs may only be done by a certified service technician. You should only perform troubleshooting and simple repairs as authorized in your product documentation, or as directed by the online or telephone service and support team. Damage due to servicing that is not authorized by Dell is not covered by your warranty. Read and follow the safety instructions that are shipped with your product.

NOTE: Solution validation was performed by using the factory shipped hardware configuration.

Topics:

- Troubleshooting system startup failure
- Troubleshooting external connections
- Troubleshooting the video subsystem
- Troubleshooting a USB device
- Troubleshooting iDRAC Direct (USB XML configuration)
- Troubleshooting iDRAC Direct (Laptop connection)
- Troubleshooting a serial I/O device
- Troubleshooting a NIC
- Troubleshooting a wet system
- Troubleshooting a damaged system
- Troubleshooting the system battery
- Troubleshooting power supply units
- Troubleshooting cooling problems
- Troubleshooting cooling fans
- Troubleshooting system memory
- Troubleshooting an internal USB key
- Troubleshooting an SD card
- Troubleshooting an optical drive
- Troubleshooting a tape backup unit
- Troubleshooting a hard drive
- Troubleshooting a storage controller
- Troubleshooting expansion cards
- Troubleshooting processors
- System messages

Troubleshooting system startup failure

If you boot the system to the BIOS boot mode after installing an operating system from the UEFI Boot Manager, the system stops responding. To avoid this issue, you must boot to the same boot mode in which you installed the operating system.

For all other startup issues, note the system messages that appear on the screen.

Troubleshooting external connections

Before troubleshooting any external devices, ensure that all external cables are securely attached to the external connectors on your system before troubleshooting any external devices.

Troubleshooting the video subsystem

Prerequisites

NOTE: Ensure the Local Server Video Enabled option is selected in the iDRAC Graphical User Interface (GUI), under Virtual Console. If this option is not selected, local video is disabled.

Steps

1. Check the cable connections (power and display) to the monitor.
2. Check the video interface cabling from the system to the monitor.
3. Run the appropriate diagnostic test.

Results

If the tests run successfully, the problem is not related to video hardware.

Next steps

If the tests fail, see the Getting help section.

Related tasks

Contacting Dell

Related reference

Getting help

Troubleshooting a USB device

Prerequisites

NOTE: Follow steps 1 to 6 to troubleshoot a USB keyboard or mouse. For other USB devices, go to step 7.

Steps

1. Disconnect the keyboard and/or mouse cables from the system and reconnect them.
2. If the problem persists, connect the keyboard and/or mouse to another USB port on the system.
3. If the problem is resolved, restart the system, enter System Setup, and check if the non-functioning USB ports are enabled.

   NOTE: Older operating systems may not support USB 3.0.
4. Check if USB 3.0 is enabled in System Setup. If enabled, disable it and see if the issue is resolved.
5. In **iDRAC Settings Utility**, ensure that **USB Management Port Mode** is configured as **Automatic** or **Standard OS Use**.
6. If the problem is not resolved, replace the keyboard and/or mouse with a known working keyboard or mouse.

   If the problem is not resolved, proceed to step 7 to troubleshoot other USB devices attached to the system.
7. Turn off all attached USB devices, and disconnect them from the system.
8. Restart the system.
9. If your keyboard is functioning, enter System Setup, verify that all USB ports are enabled on the **Integrated Devices** screen. If your keyboard is not functioning, use remote access to enable or disable the USB options.
10. Check if USB 3.0 is enabled in System Setup. If it is enabled, disable it and restart your system.
11. If the system is not accessible, reset the NVRAM_CLR jumper inside your system and restore the BIOS to the default settings. See the System board jumper setting section
12. In the **IDRAC Settings Utility**, ensure that **USB Management Port Mode** is configured as **Automatic** or **Standard OS Use**.
13. Reconnect and turn on each USB device one at a time.
14. If a USB device causes the same problem, turn off the device, replace the USB cable with a known good cable, and turn on the device.

Next steps

If all troubleshooting fails, see the Getting help section.

Related reference

Getting help

Troubleshooting iDRAC Direct (USB XML configuration)

For information about USB storage device and server configuration, see the Integrated Dell Remote Access Controller User's Guide at **Dell.com/idracmanuals**.

Steps

1. Ensure that your USB storage device is connected to the front USB Management Port, identified by icon.
2. Ensure that your USB storage device is configured with an NTFS or an FAT32 file system with only one partition.
3. Verify that the USB storage device is configured correctly. For more information about configuring the USB storage device, see the Integrated Dell Remote Access Controller User's Guide at **Dell.com/idracmanuals**.
4. In the **iDRAC Settings Utility**, ensure that **USB Management Port Mode** is configured as **Automatic** or **iDRAC Direct Only**.
5. Ensure that the **iDRAC Managed: USB XML Configuration** option is either **Enabled** or **Enabled only when the server has default credential settings**.
6. Remove and reinsert the USB storage device.
7. If import operation does not work, try with a different USB storage device.

Next steps

If all troubleshooting fails, see the Getting help section.

Troubleshooting iDRAC Direct (Laptop connection)

For information about USB laptop connection and server configuration, see the *Integrated Dell Remote Access Controller User's Guide* at **Dell.com/idracmanuals**.

Steps

1. Ensure that your laptop is connected to the front USB Management Port, identified by icon with a USB Type A/A cable.
2. On the **iDRAC Settings Utility** screen, ensure that **USB Management Port Mode** is configured as **Automatic** or **iDRAC Direct Only**.
3. If the laptop is running Windows operating system, ensure that the iDRAC Virtual USB NIC device driver is installed.
4. If the driver is installed, ensure that you are not connected to any network through WiFi or cabled ethernet, as iDRAC Direct uses a non-routable address.

Next steps

If all troubleshooting fails, see the Getting help section.

Troubleshooting a serial I/O device

Steps

1. Turn off the system and any peripheral devices connected to the serial port.
2. Swap the serial interface cable with a known working cable, and turn on the system and the serial device.

If the problem is resolved, replace the interface cable with a known working cable.

3. Turn off the system and the serial device, and swap the serial device with a compatible device.
4. Turn on the system and the serial device.

Next steps

If the problem persists, see the Getting help section.

Related reference

Getting help

Troubleshooting a NIC

Steps

1. Run the appropriate diagnostic test. For more information, see the Using system diagnostics section for the available diagnostic tests.
2. Restart the system and check for any system messages pertaining to the NIC controller.
3. Check the appropriate indicator on the NIC connector:
   - If the link indicator does not glow, the cable connected might be disengaged.
   - If the activity indicator does not glow, the network driver files might be damaged or missing.

     Install or replace the drivers as necessary. For more information, see the NIC documentation.
   - Try another known good network cable.
   - If the problem persists, use another connector on the switch or hub.
4. Ensure that the appropriate drivers are installed and the protocols are bound. For more information, see the NIC documentation.
5. Enter System Setup and confirm that the NIC ports are enabled on the **Integrated Devices** screen.
6. Ensure that all the NICs, hubs, and switches on the network are set to the same data transmission speed and duplex. For more information, see the documentation for each network device.
7. Ensure that all network cables are of the proper type and do not exceed the maximum length.

Next steps

If the problem persists, see the Getting help section.

Related reference

Getting help
Using system diagnostics

Troubleshooting a wet system

Prerequisites

CAUTION: Many repairs may only be done by a certified service technician. You should only perform troubleshooting and simple repairs as authorized in your product documentation, or as directed by the online or telephone service and support team. Damage due to servicing that is not authorized by Dell is not covered by your warranty. Read and follow the safety instructions that are shipped with your product.

Steps

1. Turn off the system and attached peripherals, and disconnect the system from the electrical outlet.
2. Remove the system cover.
3. Remove the following components (if installed) from the system:
   - Power supply unit(s)
   - Optical drive
   - Hard drives

- Hard drive backplane
- USB memory key
- Hard drive tray
- Cooling shroud
- Expansion card risers (if installed)
- Expansion cards
- Cooling fan assembly (if installed)
- Cooling fans
- Memory modules
- Processor(s) and heat sink(s)
- System board

4. Let the system dry thoroughly for at least 24 hours.
5. Reinstall the components you removed in step 3 except the expansion cards.
6. Install the system cover.
7. Turn on the system and attached peripherals.

   If the problem persists, see the Getting help section.
8. If the system starts properly, turn off the system, and reinstall all the expansion cards that you removed.
9. Run the appropriate diagnostic test. For more information, see the Using system diagnostics section.

Next steps

If the tests fail, see the Getting help section.

Related reference

Getting help
Using system diagnostics

Troubleshooting a damaged system

Prerequisites

CAUTION: Many repairs may only be done by a certified service technician. You should only perform troubleshooting and simple repairs as authorized in your product documentation, or as directed by the online or telephone service and support team. Damage due to servicing that is not authorized by Dell is not covered by your warranty. Read and follow the safety instructions that are shipped with your product.

Steps

1. Turn off the system and attached peripherals, and disconnect the system from the electrical outlet.
2. Remove the system cover.
3. Ensure that the following components are properly installed:
   - cooling shroud
   - expansion card risers (if installed)
   - expansion cards
   - power supply unit(s)
   - cooling fan assembly (if installed)
   - cooling fans
   - processor(s) and heat sink(s)
   - memory modules
   - hard drive carriers/cage
   - hard drive backplane
4. Ensure that all cables are properly connected.
5. Install the system cover.
6. Run the appropriate diagnostic test. For more information, see the Using system diagnostics section.

Next steps

If the problem persists, see the Getting help section.

Related reference

Getting help
Using system diagnostics

Troubleshooting the system battery

Prerequisites

CAUTION: Many repairs may only be done by a certified service technician. You should only perform troubleshooting and simple repairs as authorized in your product documentation, or as directed by the online or telephone service and support team. Damage due to servicing that is not authorized by Dell is not covered by your warranty. Read and follow the safety instructions that are shipped with your product.

NOTE: If the system is turned off for long periods of time (for weeks or months), the NVRAM may lose its system configuration information. This situation is caused by a defective battery.

NOTE: Some software may cause the system time to speed up or slow down. If the system seems to operate normally except for the time set in System Setup, the problem may be caused by a software, rather than by a defective battery.

Steps

1. Re-enter the time and date in System Setup.
2. Turn off the system, and disconnect it from the electrical outlet for at least an hour.
3. Reconnect the system to the electrical outlet, and turn on the system.
4. Enter System Setup.

   If the date and time displayed in System Setup are not correct, check the System Error Log (SEL) for system battery messages.

Next steps

If the problem persists, see the Getting help section.

Related reference

Getting help

Troubleshooting power supply units

Prerequisites

CAUTION: Many repairs may only be done by a certified service technician. You should only perform troubleshooting and simple repairs as authorized in your product documentation, or as directed by the online or telephone service and support team. Damage due to servicing that is not authorized by Dell is not covered by your warranty. Read and follow the safety instructions that are shipped with your product.

Troubleshooting power source problems

Steps

1. Press the power button to ensure that your system is turned on. If the power indicator does not glow when the power button is pressed, press the power button firmly.
2. Plug in another working power supply unit to ensure that the system board is not faulty.
3. Ensure that no loose connections exist.

For example, loose power cables.

4. Ensure that the power source meets applicable standards.
5. Ensure that there are no short circuits.
6. Have a qualified electrician check the line voltage to ensure that it meets the needed specifications.

Troubleshooting power supply unit problems

Steps

1. Ensure that no loose connections exist.

   For example, loose power cables.
2. Ensure that the power supply handle/LED indicates that the power supply is working properly.
3. If you have recently upgraded your system, ensure that the power supply unit has enough power to support the new system.
4. If you have a redundant power supply configuration, ensure that both the power supply units are of the same type and wattage.

   If the LED You may have to upgrade to a higher wattage power supply unit.
5. Ensure that you use only power supply units with the Extended Power Performance (EPP) label on the back.
6. Reseat the power supply unit.

   NOTE: After installing a power supply unit, allow several seconds for the system to recognize the power supply unit and determine if it is working properly.

   If the problem persists, see the Getting help section.

Related reference

Getting help

Troubleshooting cooling problems

CAUTION: Many repairs may only be done by a certified service technician. You should only perform troubleshooting and simple repairs as authorized in your product documentation, or as directed by the online or telephone service and support team. Damage due to servicing that is not authorized by Dell is not covered by your warranty. Read and follow the safety instructions that are shipped with your product.

Ensure that the following conditions exist:

- System cover, cooling shroud, EMI filler panel, memory module blank, or back filler bracket is not removed.
- Ambient temperature is not higher than the system specific ambient temperature.
- External airflow is not obstructed.
- A cooling fan is not removed or has not failed.
- The expansion card installation guidelines have been followed.

Additional cooling can be added by one of the following methods:

From the iDRAC web GUI:

1. Click **Hardware** > **Fans** > **Setup**.
2. From the **Fan Speed Offset** drop-down list, select the cooling level required or set the minimum fan speed to a custom value.

From F2 System Setup:

1. Select **iDRAC Settings** > **Thermal**, and set a higher fan speed from the fan speed offset or minimum fan speed.

From RACADM commands:

1. Run the command `racadm help system.thermalsettings`

For more information, see the Integrated Dell Remote Access User's Guide at **Dell.com/idracmanuals**.

Troubleshooting cooling fans

Prerequisites

CAUTION: Many repairs may only be done by a certified service technician. You should only perform troubleshooting and simple repairs as authorized in your product documentation, or as directed by the online or telephone service and support team. Damage due to servicing that is not authorized by Dell is not covered by your warranty. Read and follow the safety instructions that are shipped with your product.

NOTE: The fan number is referenced by the systems management software. In the event of a problem with a particular fan, you can easily identify and replace it by noting down the fan numbers on the cooling fan assembly.

1. Follow the safety guidelines listed in the Safety instructions section.
2. Follow the procedure listed in the Before working inside your system section.

Steps

1. Reseat the fan or the fan's power cable.
2. Restart the system.

Next steps

1. Follow the procedure listed in the After working inside your system section.
2. If the problem persists, see the Getting help section.

Related reference

Getting help

Troubleshooting system memory

Prerequisites

CAUTION: Many repairs may only be done by a certified service technician. You should only perform troubleshooting and simple repairs as authorized in your product documentation, or as directed by the online or telephone service and support team. Damage due to servicing that is not authorized by Dell is not covered by your warranty. Read and follow the safety instructions that are shipped with your product.

Steps

1. If the system is operational, run the appropriate system diagnostic test. See the Using system diagnostics section for the available diagnostic tests.

   If the diagnostic tests indicate a fault, follow the corrective actions provided by the diagnostic tests.
2. If the system is not operational, turn off the system and attached peripherals, and unplug the system from the power source. Wait at least for 10 seconds, and then reconnect the system to the power source.
3. Turn on the system and attached peripherals, and note the messages on the screen.

   If an error message is displayed indicating a fault with a specific memory module, go to step 12.
4. Enter System Setup, and check the system memory setting. Make any changes to the memory settings, if needed.

   If the memory settings match the installed memory but the problem still persists, go to step 12.
5. Turn off the system and attached peripherals, and disconnect the system from the electrical outlet.
6. Remove the system cover.
7. Check the memory channels and ensure that they are populated correctly.

   NOTE: See the system event log or system messages for the location of the failed memory module. Reinstall the memory device.
8. Reseat the memory modules in their sockets.
9. Install the system cover.

10. Enter System Setup and check the system memory setting.

    If the problem is not resolved, proceed with step 11.
11. Remove the system cover.
12. If a diagnostic test or error message indicates a specific memory module as faulty, swap or replace the module with a known working memory module.
13. To troubleshoot an unspecified faulty memory module, replace the memory module in the first DIMM socket with a module of the same type and capacity.

    If an error message is displayed on the screen, this may indicate a problem with the installed DIMM type(s), incorrect DIMM installation, or defective DIMM(s). Follow the on-screen instructions to resolve the problem.
14. Install the system cover.
15. As the system boots, observe any error message that is displayed and the diagnostic indicators on the front of the system.
16. If the memory problem persists, repeat step 12 through step 15 for each memory module installed.

Next steps

If the problem persists, see the Getting help section.

Related reference

Getting help
Using system diagnostics

Troubleshooting an internal USB key

Prerequisites

CAUTION: Many repairs may only be done by a certified service technician. You should only perform troubleshooting and simple repairs as authorized in your product documentation, or as directed by the online or telephone service and support team. Damage due to servicing that is not authorized by Dell is not covered by your warranty. Read and follow the safety instructions that are shipped with your product.

Steps

1. Enter System Setup and ensure that the **USB key port** is enabled on the **Integrated Devices** screen.
2. Turn off the system and attached peripherals, and disconnect the system from the electrical outlet.
3. Remove the system cover.
4. Locate the USB key and reseat it.
5. Install the system cover.
6. Turn on the system and attached peripherals, and check if the USB key is functioning.
7. If the problem is not resolved, repeat step 2 and step 3.
8. Insert a known working USB key.
9. Install the system cover.

Next steps

If the problem persists, see the Getting help section.

Related reference

Getting help

Troubleshooting an SD card

Prerequisites

CAUTION: Many repairs may only be done by a certified service technician. You should only perform troubleshooting and simple repairs as authorized in your product documentation, or as directed by the online or telephone service and

support team. Damage due to servicing that is not authorized by Dell is not covered by your warranty. Read and follow the safety instructions that are shipped with your product.

NOTE: Certain SD cards have a physical write-protect switch on the card. If the write-protect switch is turned on, the SD card is not writable.

Steps

1. Enter System Setup, and ensure that the **Internal SD Card Port** is enabled.
2. Turn off the system, including any attached peripherals, and disconnect the system from the electrical outlet.
3. Remove the system cover.

   NOTE: When an SD card failure occurs, the internal dual SD module controller notifies the system. On the next restart, the system displayed a message indicating the failure. If redundancy is enabled at the time of SD card failure, a critical alert will be logged and chassis health will degrade.
4. Replace the failed SD card with a new SD card.
5. Install the system cover.
6. Reconnect the system to its electrical outlet and turn on the system, including any attached peripherals.
7. Enter System Setup, and ensure that the **Internal SD Card Port** and **Internal SD Card Redundancy** modes are set to the needed modes.

   Verify that the correct SD slot is set as **Primary SD Card**.
8. Check if the SD card is functioning properly.
9. If the **Internal SD Card Redundancy** option is set to **Enabled** at the time of the SD card failure, the system prompts you to perform a rebuild.

   NOTE: The rebuild is always sourced from the primary SD card to the secondary SD card.

Troubleshooting an optical drive

Prerequisites

CAUTION: Many repairs may only be done by a certified service technician. You should only perform troubleshooting and simple repairs as authorized in your product documentation, or as directed by the online or telephone service and support team. Damage due to servicing that is not authorized by Dell is not covered by your warranty. Read and follow the safety instructions that are shipped with your product.

Steps

1. Try using a different CD or DVD.
2. If the problem is not resolved, enter System Setup and ensure that the integrated SATA controller and the drive's SATA port are enabled.
3. Run the appropriate diagnostic test.
4. Turn off the system and attached peripherals, and disconnect the system from the electrical outlet.
5. If installed, remove the bezel.
6. Remove the system cover.
7. Ensure that the interface cable is securely connected to the optical drive and to the controller.
8. Ensure that a power cable is properly connected to the drive.
9. Install the system cover.

Next steps

If the problem persists, see the Getting help section.

Related reference

Getting help
Using system diagnostics

Troubleshooting a tape backup unit

Prerequisites

CAUTION: Many repairs may only be done by a certified service technician. You should only perform troubleshooting and simple repairs as authorized in your product documentation, or as directed by the online or telephone service and support team. Damage due to servicing that is not authorized by Dell is not covered by your warranty. Read and follow the safety instructions that are shipped with your product.

Steps

1. Use a different tape cartridge.
2. Ensure that the device drivers for the tape backup unit are installed and are configured correctly. See your tape drive documentation for more information about device drivers.
3. Reinstall the tape-backup software as instructed in the tape-backup software documentation.
4. Ensure that the interface cable of the tape drive is connected to the external port on the controller card.
5. Perform the following steps to ensure that the controller card is properly installed:
   a) Turn off the system and attached peripherals, and disconnect the system from the electrical outlet.
   b) Remove the system cover.
   c) Reseat the controller card in the expansion card slot.
   d) Install the system cover.
   e) Turn on the system and attached peripherals.
6. Run the appropriate diagnostic test. For more information, see the Using system diagnostics.

Next steps

If you cannot resolve the problem, see the Getting help section.

Related reference

Getting help
Using system diagnostics

Troubleshooting a hard drive

Prerequisites

CAUTION: This troubleshooting procedure can erase data stored on the hard drive. Before you proceed, back up all files on the hard drive.

CAUTION: Many repairs may only be done by a certified service technician. You should only perform troubleshooting and simple repairs as authorized in your product documentation, or as directed by the online or telephone service and support team. Damage due to servicing that is not authorized by Dell is not covered by your warranty. Read and follow the safety instructions that are shipped with your product.

Steps

1. Run the appropriate diagnostic test. See the Using system diagnostics section.

   Depending on the results of the diagnostics test, proceed as needed through the following steps.
2. If your system has a RAID controller and your hard drives are configured in a RAID array, perform the following steps:
   a) Restart the system and press F10 during system startup to run the Dell Lifecycle Controller, and then run the Hardware Configuration wizard to check the RAID configuration.

      See the Dell Lifecycle Controller documentation or online help for information about RAID configuration.
   b) Ensure that the hard drives are configured correctly for the RAID array.
   c) Take the hard drive offline and reseat the drive.
   d) Exit the configuration utility and allow the system to boot to the operating system.

3. Ensure that the needed device drivers for your controller card are installed and are configured correctly. See the operating system documentation for more information.
4. Restart the system and enter the System Setup.
5. Verify that the controller is enabled and the drives are displayed in the System Setup.

Next steps

If the problem persists, see the Getting help section.

Troubleshooting a storage controller

CAUTION: Many repairs may only be done by a certified service technician. You should only perform troubleshooting and simple repairs as authorized in your product documentation, or as directed by the online or telephone service and support team. Damage due to servicing that is not authorized by Dell is not covered by your warranty. Read and follow the safety instructions that are shipped with your product.

NOTE: When troubleshooting a SAS or PERC controller, see the documentation for your operating system and the controller.

1. Run the appropriate diagnostic test. See the Using system diagnostics section.
2. Turn off the system and attached peripherals, and disconnect the system from the electrical outlet.
3. Remove the system cover.
4. Verify that the installed expansion cards are compliant with the expansion card installation guidelines.
5. Ensure that each expansion card is firmly seated in its connector.
6. Install the system cover.
7. Reconnect the system to the electrical outlet, and turn on the system and attached peripherals.
8. If the problem is not resolved, turn off the system and attached peripherals, and disconnect the system from the electrical outlet.
9. Remove the system cover.
10. Remove all expansion cards installed in the system.
11. Install the system cover.
12. Reconnect the system to the electrical outlet, and turn on the system and attached peripherals.
13. Run the appropriate diagnostic test. See the Using system diagnostics section. If the tests fail, see the Getting help section.
14. For each expansion card you removed in step 10, perform the following steps:
    a. Turn off the system and attached peripherals, and disconnect the system from the electrical outlet.
    b. Remove the system cover.
    c. Reinstall one of the expansion cards.
    d. Install the system cover.
    e. Run the appropriate diagnostic test. See the Using system diagnostics section.

If the problem persists, see the Getting help section.

Related reference

Getting help
Using system diagnostics

Troubleshooting expansion cards

Prerequisites

CAUTION: Many repairs may only be done by a certified service technician. You should only perform troubleshooting and simple repairs as authorized in your product documentation, or as directed by the online or telephone service and support team. Damage due to servicing that is not authorized by Dell is not covered by your warranty. Read and follow the safety instructions that are shipped with your product.

NOTE: When troubleshooting an expansion card, you also have to see the documentation for your operating system and the expansion card.

Steps

1. Run the appropriate diagnostic test. See the Using system diagnostics section.
2. Turn off the system and attached peripherals, and disconnect the system from the electrical outlet.
3. Remove the system cover.
4. Ensure that each expansion card is firmly seated in its connector.
5. Install the system cover.
6. Turn on the system and attached peripherals.
7. If the problem is not resolved, turn off the system and attached peripherals, and disconnect the system from the electrical outlet.
8. Remove the system cover.
9. Remove all expansion cards installed in the system.
10. Install the system cover.
11. Run the appropriate diagnostic test. See the Using system diagnostics section.

    If the tests fail, see the Getting help section.
12. For each expansion card you removed in step 8, perform the following steps:
    a) Turn off the system and attached peripherals, and disconnect the system from the electrical outlet.
    b) Remove the system cover.
    c) Reinstall one of the expansion cards.
    d) Install the system cover.
    e) Run the appropriate diagnostic test. See the Using system diagnostics section.

Next steps

If the problem persists, see the Getting help section.

Related reference

Getting help
Using system diagnostics

Troubleshooting processors

Prerequisites

CAUTION: Many repairs may only be done by a certified service technician. You should only perform troubleshooting and simple repairs as authorized in your product documentation, or as directed by the online or telephone service and support team. Damage due to servicing that is not authorized by Dell is not covered by your warranty. Read and follow the safety instructions that are shipped with your product.

Steps

1. Run the appropriate diagnostics test. See the Using system diagnostics section.
2. Turn off the system and attached peripherals, and disconnect the system from the electrical outlet.
3. Remove the system cover.
4. Ensure that the processor and heat sink are properly installed.
5. Install the system cover.
6. Run the appropriate diagnostic test. See the Using system diagnostics section.
7. If the problem persists, see the Getting help section.

Related reference

Getting help
Using system diagnostics

System messages

For a list of event and error messages generated by the system firmware and agents that monitor system components, see the Dell Event and Error Messages Reference Guide at **Dell.com/openmanagemanuals** > **OpenManage software**.

Warning messages

A warning message alerts you to a possible problem and prompts you to respond before the system continues a task. For example, before you format a hard drive, a message warns you that you may lose all data on the hard drive. Warning messages usually interrupt the task and need you to respond by typing y (yes) or n (no).

NOTE: Warning messages are generated by either the application or the operating system. For more information, see the documentation that shipped with the operating system or application.

Diagnostic messages

The system diagnostic utility will generate messages if there are errors detected when you run diagnostic tests on your system. For more information about system diagnostics, see the Using system diagnostics section.

Related reference

Getting help
Using system diagnostics

Alert messages

The systems management software generates alert messages for your system. Alert messages include information, status, warning, and failure messages for drive, temperature, fan, and power conditions. For more information, see the systems management software documentation links listed in the Documentation resources section of this manual.

8

Using system diagnostics

If you experience a problem with your system, run the system diagnostics before contacting Dell for technical assistance. The purpose of running system diagnostics is to test your system hardware without requiring additional equipment or risking data loss. If you are unable to fix the problem yourself, service and support personnel can use the diagnostics results to help you solve the problem.

Topics:

- Dell Embedded System Diagnostics

Dell Embedded System Diagnostics

NOTE: The Dell Embedded System Diagnostics is also known as Enhanced Pre-boot System Assessment (ePSA) diagnostics.

The Embedded System Diagnostics provides a set of options for particular device groups or devices allowing you to:

- Run tests automatically or in an interactive mode
- Repeat tests
- Display or save test results
- Run thorough tests to introduce additional test options to provide extra information about the failed device(s)
- View status messages that inform you if tests are completed successfully
- View error messages that inform you of problems encountered during testing

When to use the Embedded System Diagnostics

Run the Embedded System Diagnostics (ePSA) if your system does not boot.

Running the Embedded System Diagnostics from Boot Manager

Prerequisites

Run the Embedded System Diagnostics (ePSA) if your system does not boot.

Steps

1. When the system is booting, press F11.
2. Use the up arrow and down arrow keys to select **System Utilities** > **Launch Diagnostics**.
   The ePSA Pre-boot System Assessment window is displayed, listing all devices detected in the system. The diagnostics starts executing the tests on all the detected devices.

Running the Embedded System Diagnostics from the Dell Lifecycle Controller

Steps

1. As the system boots, press F11.
2. Select **Hardware Diagnostics** → **Run Hardware Diagnostics**.
   The **ePSA Pre-boot System Assessment** window is displayed, listing all devices detected in the system. The diagnostics starts executing the tests on all the detected devices.

System diagnostic controls

Menu	Description
Configuration	Displays the configuration and status information of all detected devices.
Results	Displays the results of all tests that are run.
System health	Provides the current overview of the system performance.
Event log	Displays a time-stamped log of the results of all tests run on the system. This is displayed if at least one event description is recorded.

9

Jumpers and connectors

This topic provides specific information about the system jumpers. It also provides some basic information about jumpers and switches and describes the connectors on the various boards in the system. Jumpers on the system board help to disable system and setup passwords. You must know the connectors on the system board to install components and cables correctly.

Topics:

- System board jumper settings
- System board connectors
- Disabling a forgotten password

System board jumper settings

For information on resetting the password jumper to disable a password, see the Disabling a Forgotten Password section.

Table 41. System board jumper settings

Jumper	Setting	Description
PWRD_EN		The password reset feature is enabled (pins 2–4).
		The password reset feature is disabled (pins 4–6). The iDRAC local access is unlocked at the next AC power cycle.
NVRAM_CLR		The configuration settings are retained at the next system boot (pins 3–5).
		The configuration settings are cleared at system boot (pins 1–3).

Related tasks

Disabling a forgotten password

System board connectors

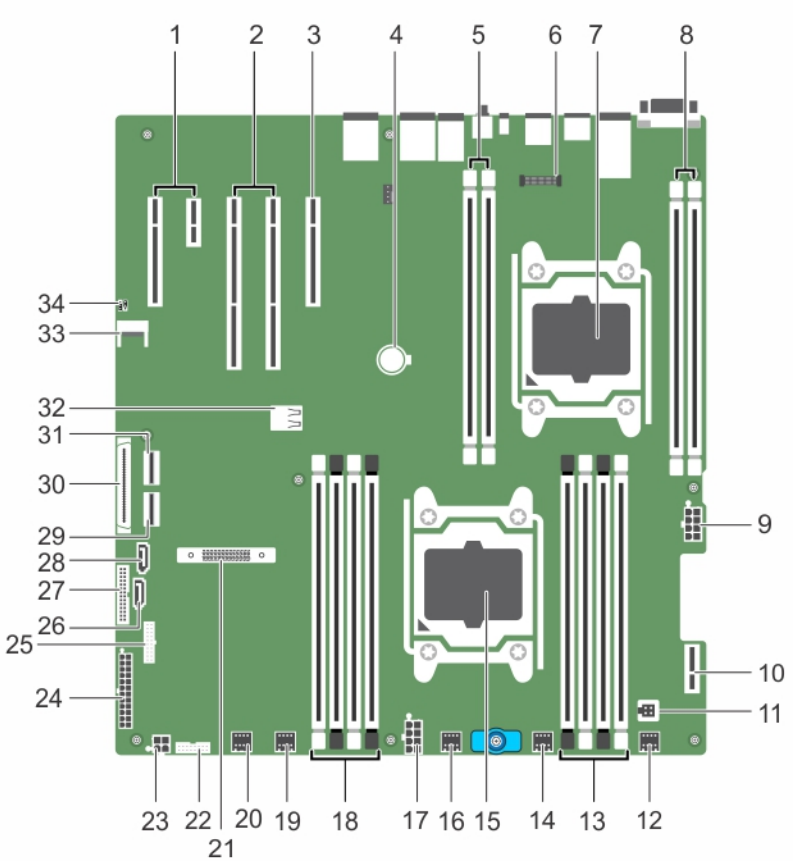

Figure 88. System board connectors and jumpers

Table 42. System board connectors and jumpers

Item	Connector	Description
1	PCIE_G2_X1 and PCIE _G2_X4	PCIE Slot 5 (x4) and Slot 4 (x1)
2	PCIE_G3_X16 and PCIE_G3_X16	PCIE Slot 3 (next to Slot 4) and Slot 2 (next to Slot 1)
3	PCIE_G3_X8	PCIE card Slot 1
4	BATTERY	System battery connector
5	B1, B2	DIMMS for CPU2 channels 0&1
6	J-AMEA	iDrac ports card connector
7	CPU2	Processor socket 2
8	B3, B4	DIMMS for CPU2 channels 2&3
9	CPU2_PWR_C (P3)	CPU2 power connector
10	IDSDM	Internal Dual SD Module
11	INTRUSION	Intrusion switch connector
12	FAN6	Cooling fan 6 connector
13	A1,A5,A2,A6	DIMMS for CPU1 channels 0&1
14	FAN5	Cooling fan 5 connector
15	CPU1	Processor socket 1
16	FAN4	Cooling fan 4 connector

Item	Connector	Description
17	PWR_CONN B(P2)	CPU1 power connector
18	A8,A4,A7,A3	DIMMS for CPU1 channels 2&3
19	FAN3	Cooling fan 3 connector
20	FAN2	Cooling fan 2 connector
21	MINI PERC C-Stack	Mini PERC C-Stack connector
22	BP_SIG	Backplane signal connector
23	ODD_PWR	Power for the optical drive
24	SYS_PWR_CONN(P1)	24-pin power connector
25	FP_USB	Front USB connector
26	SATA_CDROM	Optical drive SATA connector
27	PIB_CONN	Power interface board signal connector
28	SATA_TBU	Tape backup unit SATA connector
29	SW_RAID_B	Internal SATA B connector
30	CTRL_PNL	Control panel signal connector
31	SW_RAID_A	Internal SATA A connector
32	INT_ USB3.0	Internal USB3 port
33	TPM_MODULE	Trusted Platform Module connector
34	J_PSWD_NVRAM	Clear password / NVRAM jumpers. See the System board jumper settings section.

Related tasks

System board jumper settings

Disabling a forgotten password

The software security features of the system include a system password and a setup password. The password jumper enables these password features or disables them and clears any password(s) currently in use.

Prerequisites

CAUTION: Many repairs may only be done by a certified service technician. You should only perform troubleshooting and simple repairs as authorized in your product documentation, or as directed by the online or telephone service and support team. Damage due to servicing that is not authorized by Dell is not covered by your warranty. Read and follow the safety instructions that are shipped with your product.

Steps

1. Turn off the system, including any attached peripherals, and disconnect the system from the electrical outlet.
2. Remove the system cover.
3. Move the jumper on the system board jumper from pins 4 and 6 to pins 2 and 4.
4. Install the system cover.

   The existing passwords are not disabled (erased) until the system boots with the jumper on pins 2 and 4. However, before you assign a new system and/or setup password, you must move the jumper back to pins 4 and 6.

   NOTE: If you assign a new system and/or setup password with the jumper on pins 2 and 4, the system disables the new password(s) the next time it boots.
5. Reconnect the system to its electrical outlet and turn the system on, including any attached peripherals.
6. Turn off the system, including any attached peripherals, and disconnect the system from the electrical outlet.
7. Remove the system cover.

8. Move the jumper on the system board jumper from pins 2 and 4 to pins 4 and 6.
9. Install the system cover.
10. Reconnect the system to its electrical outlet and turn the system on, including any attached peripherals.
11. Assign a new system and/or setup password.

10

Getting help

Topics:

- Contacting Dell
- Accessing system information by using QRL

Contacting Dell

Dell provides several online and telephone-based support and service options. If you do not have an active internet connection, you can find contact information about your purchase invoice, packing slip, bill, or Dell product catalog. Availability varies by country and product, and some services may not be available in your area. To contact Dell for sales, technical assistance, or customer-service issues:

Steps

1. Go to **Dell.com/support**.
2. Select your country from the drop-down menu on the lower right corner of the page.
3. For customized support:
   a) Enter your system Service Tag in the **Enter your Service Tag** field.
   b) Click **Submit**.
   The support page that lists the various support categories is displayed.
4. For general support:
   a) Select your product category.
   b) Select your product segment.
   c) Select your product.
   The support page that lists the various support categories is displayed.
5. For contact details of Dell Global Technical Support:
   a) Click Global Technical Support.
   b) The Contact Technical Support page is displayed with details to call, chat, or e-mail the Dell Global Technical Support team.

Accessing system information by using QRL

You can use the Quick Resource Locator (QRL) to get immediate access to the information about your system.

Prerequisites

Ensure that your smartphone or tablet has the QR code scanner installed.

The QRL includes the following information about your system:

About this task

- How-to videos
- Reference materials, including the Owner's Manual, LCD diagnostics, and mechanical overview
- Your system service tag to quickly access your specific hardware configuration and warranty information
- A direct link to Dell to contact technical assistance and sales teams

Steps

1. Go to **Dell.com/QRL** and navigate to your specific product or
2. Use your smartphone or tablet to scan the model-specific Quick Resource (QR) code on your Dell PowerEdge system or in the Quick Resource Locator section.

Quick Resource Locator (QRL)

Use the Quick Resource Locator (QRL) to get immediate access to system information and how-to videos. This can be done by visiting **www.Dell.com/QRL** or by using your smartphone or tablet and a model specific Quick Resource (QR) code located on your Dell PowerEdge system. To try out the QR code, scan the following image.