Dell PowerEdge R330

Owner's Manual

Regulatory Model: E34S Series
Regulatory Type: E34S001

Notes, cautions, and warnings

NOTE: A NOTE indicates important information that helps you make better use of your product.

CAUTION: A CAUTION indicates either potential damage to hardware or loss of data and tells you how to avoid the problem.

WARNING: A WARNING indicates a potential for property damage, personal injury, or death.

Copyright © 2017 Dell Inc. or its subsidiaries. All rights reserved. Dell, EMC, and other trademarks are trademarks of Dell Inc. or its subsidiaries. Other trademarks may be trademarks of their respective owners.

2017 - 12

Rev. A03

Contents

1 About your system.....8
Supported configurations on PowerEdge R330 systems.....9
Front panel features and indicators.....10
LCD panel features.....13
Back panel features and indicators.....14
Diagnostic indicators.....15
Diagnostic indicators on the front panel.....15
Hard drive indicator codes.....16
NIC indicator codes.....17
Internal dual SD module indicator codes.....17
iDRAC Direct LED indicator codes.....18
Indicator codes for redundant power supply unit.....18
Locating Service Tag of your system.....20

2 Documentation resources.....21

3 Technical specifications.....23
Chassis dimensions.....23
Chassis weight.....23
Processor specifications.....24
Expansion bus specifications.....24
Memory specifications.....24
Power specifications.....25
Storage controller specifications.....25
Drive specifications.....25
Hard drives.....25
Optical drive.....25
Ports and connectors specifications.....25
USB ports.....25
NIC ports.....26
iDRAC8.....26
Serial connector.....26
VGA ports.....26
SD vFlash.....26
Internal Dual SD Module.....26
Video specifications.....26
Expanded operating temperature.....27
Environmental specifications.....27

4 Initial system setup and configuration.....30
Setting up your system.....30
iDRAC configuration.....30
Options to set up iDRAC IP address.....30
Options to install the operating system.....31

Methods to download firmware and drivers....31

5 Pre-operating system management applications....32
Navigation keys....32
System Setup....32
Entering System Setup....33
System Setup details....33
System BIOS Settings details....33
System Information details....34
Memory Settings details....34
Processor Settings details....35
SATA Settings details....36
Boot Settings details....37
Network Settings screen details....37
Integrated Devices details....38
Serial Communication details....39
System Profile Settings details....39
System Security Settings details....40
Miscellaneous Settings details....42
About Boot Manager....42
Viewing Boot Manager....42
Boot Manager main menu....43
About Dell Lifecycle Controller....43
Changing the boot order....43
Choosing the system boot mode....43
Creating a system and setup password....44
Using your system password to secure your system....44
Deleting or changing system password and setup password....45
Operating with a setup password enabled....45
Embedded systems management....45
iDRAC Settings utility....45
Entering the iDRAC Settings utility....46
Changing the thermal settings....46

6 Installing and removing system components....47
Safety instructions....47
Before working inside your system....47
After working inside your system....47
Recommended tools....48
Front bezel (optional)....48
Removing the optional front bezel....48
Installing the optional front bezel....49
System cover....49
Removing the system cover....49
Installing the system cover....50
Inside the system....52
Intrusion switch....54
Removing the intrusion switch....54
Installing the intrusion switch....55

Cooling shroud....56
Removing the cooling shroud....56
Installing the cooling shroud....57
System memory....58
General memory module installation guidelines....59
Sample memory configurations....59
Removing a memory module....61
Installing a memory module....62
Hard drives....63
Supported hard drive configurations....64
Removing a 2.5-inch hard drive blank....64
Installing a 2.5-inch hard drive blank....65
Removing a 3.5-inch hard drive blank....65
Installing a 3.5-inch hard drive blank....66
Removing a 3.5-inch cabled hard drive carrier....66
Installing a 3.5-inch cabled hard drive carrier....67
Removing a cabled hard drive from a hard drive carrier....68
Installing a cabled hard drive into a hard drive carrier....69
Removing a hot swappable hard drive carrier....70
Installing a hot swappable hard drive carrier....71
Removing the optional 1.8-inch solid state drives....72
Installing the optional 1.8-inch solid state drives....74
Removing a 2.5-inch hard drive from a 3.5-inch hard drive adapter....75
Installing a 2.5-inch hot swappable hard drive into a 3.5-inch hard drive adapter....76
Removing a 3.5-inch hard drive adapter from a 3.5-inch hot swappable hard drive carrier....77
Installing a 3.5-inch hard drive adapter into the 3.5-inch hot swappable hard drive carrier....78
Removing a hot swappable hard drive from a hard drive carrier....79
Installing a hot swappable hard drive into a hot swappable hard drive carrier....79
Optical drive (optional)....80
Removing the optional optical drive....80
Installing the optional optical drive....81
Cooling fans....82
Removing the cooling fan blank....83
Installing the cooling fan blank....84
Removing a cooling fan....84
Installing a cooling fan....85
Internal USB memory key (optional)....87
Replacing the optional internal USB memory key....87
Expansion cards and expansion card riser....89
Expansion card installation guidelines....89
Removing the expansion card riser....90
Installing the expansion card riser....91
Removing an expansion card....92
Installing an expansion card....93
Removing the internal PERC card....95
Installing the internal PERC card....96
SD vFlash card (optional)....97
Removing the optional SD vFlash card....97
Installing an optional SD vFlash card....98
iDRAC port card (optional)....98

Removing the optional iDRAC port card.... 99
Installing the optional iDRAC port card.... 100
Internal dual SD module (optional).... 101
Removing an (optional) internal SD card.... 102
Installing an (optional) internal SD card.... 103
Removing the optional internal dual SD module.... 104
Installing the optional internal dual SD module.... 105
Heat sink and processor.... 106
Removing the heat sink.... 106
Removing the processor.... 107
Installing a processor.... 109
Installing a heat sink.... 111
Power supply units.... 112
Hot spare feature.... 112
Removing a redundant power supply unit.... 113
Installing a redundant power supply unit.... 113
Removing the power supply unit blank.... 114
Installing the power supply unit blank.... 115
System battery.... 115
Replacing the system battery.... 116
Hard drive backplane.... 117
Removing the hard drive backplane.... 117
Installing the hard drive backplane.... 125
Control panel assembly.... 127
Removing the LCD control panel assembly.... 127
Installing the LCD control panel assembly.... 129
Removing the LED control panel assembly.... 130
Installing the LED control panel assembly.... 132
Power interposer board.... 133
Removing the power interposer board.... 133
Installing the power interposer board.... 134
Trusted Platform Module.... 135
Installing the Trusted Platform Module.... 135
Initializing the TPM for BitLocker users.... 136
Initializing the TPM for TXT users.... 136
System board.... 137
Removing the system board.... 137
Installing the system board.... 139

7 Using system diagnostics.... 142
Dell Embedded System Diagnostics.... 142
When to use the Embedded System Diagnostics.... 142
Running the Embedded System Diagnostics from Boot Manager.... 142
Running the Embedded System Diagnostics from the Dell Lifecycle Controller.... 142
System diagnostic controls.... 143

8 Jumpers and connectors.... 144
System board jumper settings.... 144
System board connectors.... 145

Disabling a forgotten password....146

9 Troubleshooting your system....147
Troubleshooting system startup failure....147
Troubleshooting external connections....147
Troubleshooting the video subsystem....148
Troubleshooting a USB device....148
Troubleshooting iDRAC Direct (USB XML configuration)....149
Troubleshooting iDRAC Direct (Laptop connection)....149
Troubleshooting a serial I/O device....149
Troubleshooting a NIC....150
Troubleshooting a wet system....150
Troubleshooting a damaged system....151
Troubleshooting the system battery....151
Troubleshooting power supply units....152
Troubleshooting power source problems....152
Power supply unit problems....152
Troubleshooting cooling problems....153
Troubleshooting cooling fans....153
Troubleshooting system memory....154
Troubleshooting an internal USB key....154
Troubleshooting an SD card....155
Troubleshooting an optical drive....155
Troubleshooting a tape backup unit....156
Troubleshooting a hard drive or SSD....156
Troubleshooting a storage controller....157
Troubleshooting expansion cards....158
Troubleshooting processors....158

10 Getting help....159
Contacting Dell....159
Documentation feedback....159
Accessing system information by using QRL....159

1

About your system

The Dell PowerEdge R330 is a single socket rack server and supports the following hardware configuration:

Component	Quantity
Processor	The server supports one processor from these product families • Intel E3-1200 v5 or v6 series • Intel Core i3 6100 series • Intel Celeron G3900 series • Intel Celeron G3930 • Intel Pentium G4500 series • Intel Pentium G4600 series
Memory modules	Up to four DIMMS
Hard drives	Up to eight hard drives or solid state drives (SSDs)

Topics:

- Supported configurations on PowerEdge R330 systems
- Front panel features and indicators
- Back panel features and indicators
- Diagnostic indicators
- Locating Service Tag of your system

Supported configurations on PowerEdge R330 systems

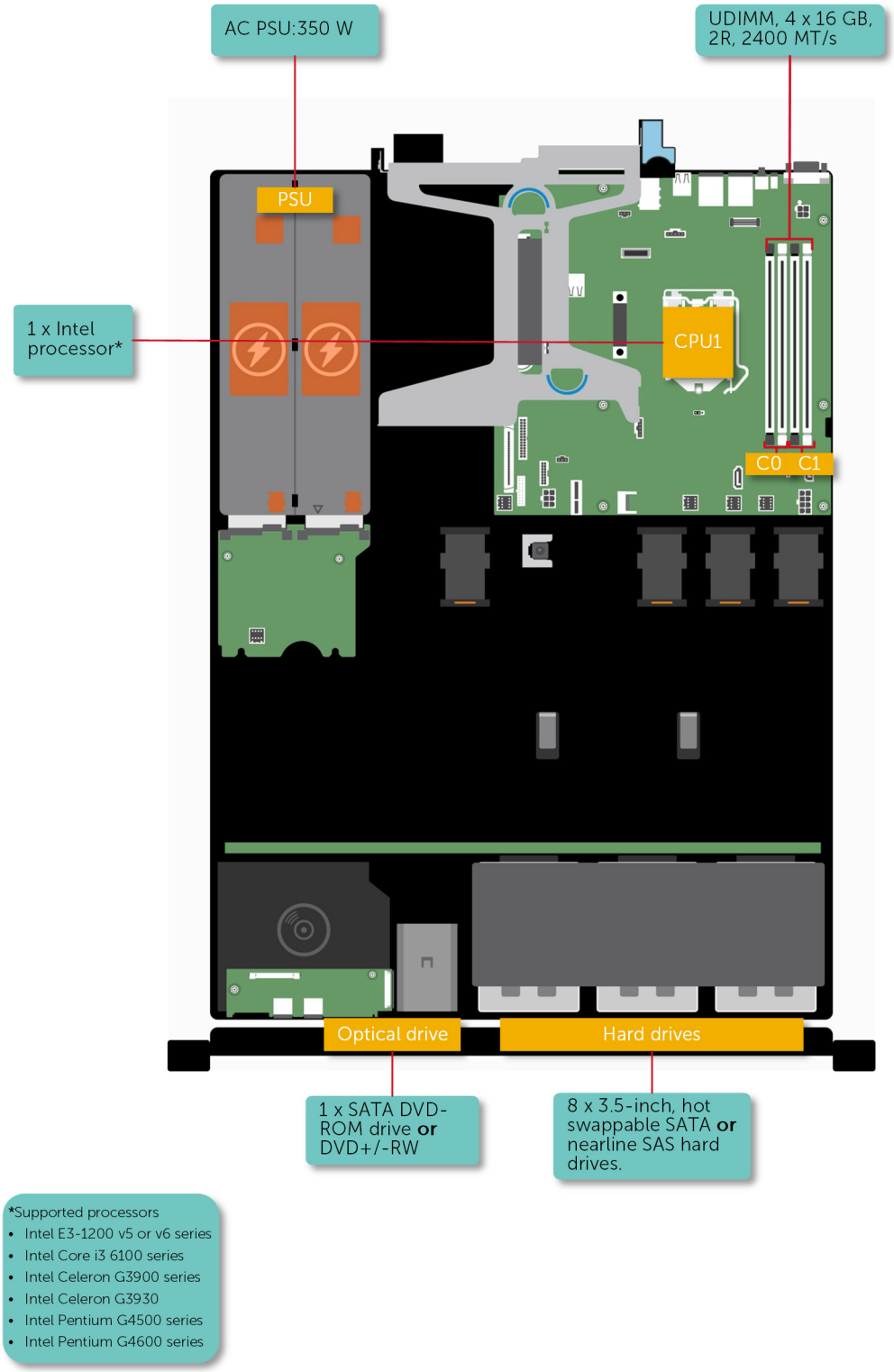

Figure 1. System view with supported configurations

Front panel features and indicators

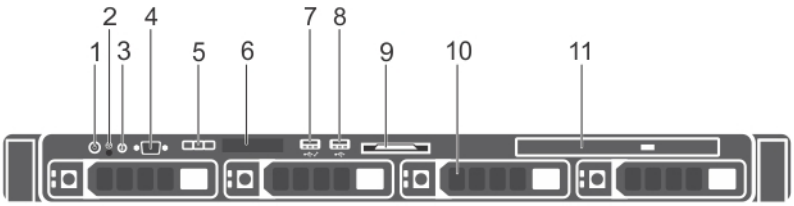

Figure 2. Front panel features and indicators — four 3.5-inch hot-swappable hard drive chassis

Table 1. Front panel features and indicators— four 3.5-inch hot-swappable hard drive chassis

Item	Indicator, button, or connector	Icon	Description
1	Power-on indicator, power button		Enables you to know the power status of the system. The power-on indicator glows when the system power is on. The power button controls the power supply output to the system. **NOTE: On ACPI-compliant operating systems, turning off the system by pressing the power button causes the system to perform a graceful shutdown before power to the system is turned off.**
2	NMI button		Enables you to troubleshoot software and device driver errors when running certain operating systems. This button can be pressed by using the end of a paper clip. Use this button only if directed to do so by qualified support personnel or by the operating system's documentation.
3	System identification button		Enables you to locate a particular system within a rack. The identification buttons are on the front and back panels. When one of these buttons is pressed, the LCD panel on the front and the system status indicator on the back flash until one of the buttons is pressed again. Press the system identification button to turn the system ID on or off. If the system stops responding during POST, press and hold the system ID button for more than five seconds to enter BIOS progress mode. To reset iDRAC (if not disabled in F2 iDRAC setup), press and hold the button for more than 15 seconds.
4	Video connector		Enables you to connect a display to the system.
5	LCD menu buttons		Enables you to navigate the control panel LCD menu.
6	LCD panel		Displays system ID, status information, and system error messages. See the LCD panel features section. **NOTE: LCD panel is not available in a cabled hard drive chassis.**
7	USB management port/iDRAC managed USB port		Functions as a regular USB port or provide access to the iDRAC Direct features. For more information, see the iDRAC User's Guide at **Dell.com/idracmanuals**.
8	USB connector		Enables you to connect USB devices to the system. The port is USB 2.0-compliant.

Item	Indicator, button, or connector	Icon	Description
9	Information tag		Contains system information such as service tag, NIC, MAC address for your reference. The information tag is a slide-out label panel.
10	Hard drives slots		Enables you to install up to four 3.5-inch hot-swappable hard drives or four 2.5-inch hot-swappable hard drives in 3.5-inch hard drive adapters.
11	Optical drive slot		Enables you to install an optional slim SATA DVD-ROM drive or DVD +/-RW drive.

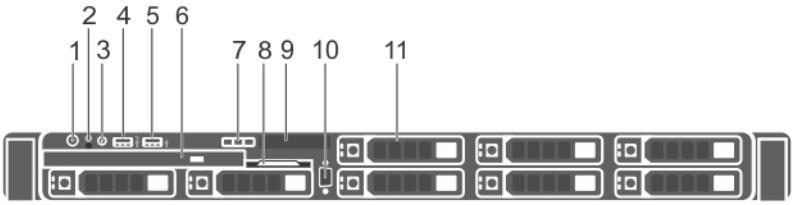

Figure 3. Front panel features and indicators — eight 2.5-inch hot-swappable hard drives or SSDs chassis

Table 2. Front panel features and indicators—eight 2.5-inch hot-swappable hard drives or SSDs chassis

Item	Indicator, Button, or Connector	Icon	Description
1	Power-on indicator, power button		Enables you to know the power status of the system. The power-on indicator glows when the system power is on. The power button controls the power supply output to the system. **NOTE: On ACPI-compliant operating systems, turning off the system by pressing the power button causes the system to perform a graceful shutdown before power to the system is turned off.**
2	NMI button		Enables you to troubleshoot software and device driver errors when running certain operating systems. This button can be pressed by using the end of a paper clip. Use this button only if directed to do so by qualified support personnel or by the operating system's documentation.
3	System identification button		Enables you to locate a particular system within a rack. The identification buttons are on the front and back panels. When one of these buttons is pressed, the LCD panel on the front and the system status indicator on the back flash until one of the buttons is pressed again. Press the system identification button to turn the system ID on or off. If the system stops responding during POST, press and hold the system ID button for more than five seconds to enter BIOS progress mode. To reset iDRAC (if not disabled in F2 iDRAC setup), press and hold the button for more than 15 seconds.
4	USB management port/iDRAC managed USB port		Functions as a regular USB port or provide access to the iDRAC Direct features. For more information, see the iDRAC User's Guide at **Dell.com/idracmanuals**.

Item	Indicator, Button, or Connector	Icon	Description
5	USB connector		Enables you to connect USB devices to the system. The port is USB 2.0-compliant.
6	Optical drive slot		Enables you to install an optional slim SATA DVD-ROM drive or DVD+/-RW drive.
7	LCD menu buttons		Enable you to navigate the control panel LCD menu.
8	Information tag		Contains system information such as service tag, NIC, MAC address for your reference. The information tag is a slide-out label panel.
9	LCD panel		Displays system ID, status information, and system error messages. See LCD panel features.
10	Video connector		Enables you to connect a VGA display to the system.
11	Hard drive slots		Enables you to install up to eight 2.5-inch hot swappable hard drives.

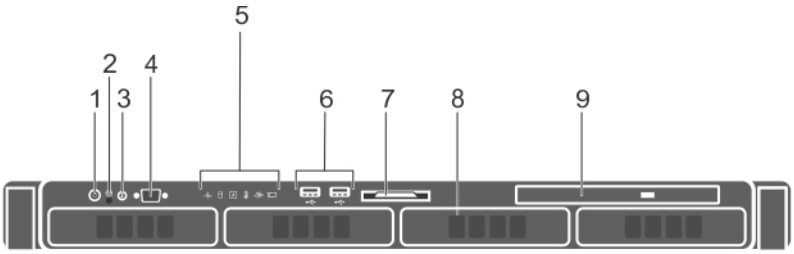

Figure 4. Front panel features and indicators — four 3.5-inch cabled hard drive chassis

Table 3. Front panel features and indicators — four 3.5-inch cabled hard drive chassis

Item	Indicator, Button, or Connector	Icon	Description
1	Power-on indicator, power button		Enables you to know the power status of the system. The power-on indicator glows when the system power is on. The power button controls the power supply output to the system. **NOTE: On ACPI-compliant operating systems, turning off the system by pressing the power button causes the system to perform a graceful shutdown before power to the system is turned off.**
2	NMI button		Enables you to troubleshoot software and device driver errors when running certain operating systems. This button can be pressed by using the end of a paper clip. Use this button only if directed to do so by qualified support personnel or by the operating system's documentation.
3	System identification button		Enables you to locate a particular system within a rack. The identification buttons are on the front and back panels. When one of these buttons is pressed, the LCD panel on the front and the system status indicator on the back flash until one of the buttons is pressed again. Press the system identification button to turn the system ID on or off.

Item	Indicator, Button, or Connector	Icon	Description
			If the system stops responding during POST, press and hold the system ID button for more than five seconds to enter BIOS progress mode. To reset iDRAC (if not disabled in F2 iDRAC setup), press and hold the button for more than 15 seconds.
4	Video connector		Enables you to connect a display to the system.
5	Diagnostic indicators		Glows to display error status. For more information, see Diagnostic indicators on the front panel.
6	USB connectors		Enable you to connect USB devices to the system. The ports are USB 2.0-compliant.
7	Information tag		Contains system information such as service tag, NIC, MAC address for your reference. The information tag is a slide-out label panel.
8	Hard drive slots		Enables you to install up to four 3.5-inch cabled hard drives.
9	Optical drive or solid state drive (SSDs) slot		Enables you to install one optional SATA DVD-ROM drive or DVD +/-RW drive, or two optional 1.8-inch SSDs

LCD panel features

The system's LCD panel provides system information and status and error messages to indicate if the system is operating correctly or if the system needs attention. For more information about the error messages, see the *Dell Event and Error Messages Reference Guide* at **Dell.com/openmanagemanuals** > **OpenManage software**.

- The LCD backlight turns blue during normal operating conditions and turns amber to indicate an error condition.
- The LCD backlight is turned off when the system is in standby mode and can be turned on by pressing either the Select, Left, or Right button on the LCD panel.
- The LCD backlight remains OFF if LCD messaging is turned off through the iDRAC utility, the LCD panel, or other tools.

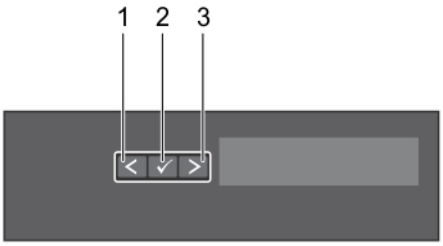

Figure 5. LCD panel Features

1. Left
2. Select
3. Right

Button	Description
Left	Moves the cursor back in one-step increments.
Select	Selects the menu item highlighted by the cursor.
Right	Moves the cursor forward in one-step increments. During message scrolling: • Press once to increase scrolling speed • Press again to stop • Press again to return to the default scrolling speed • Press again to repeat the cycle

Back panel features and indicators

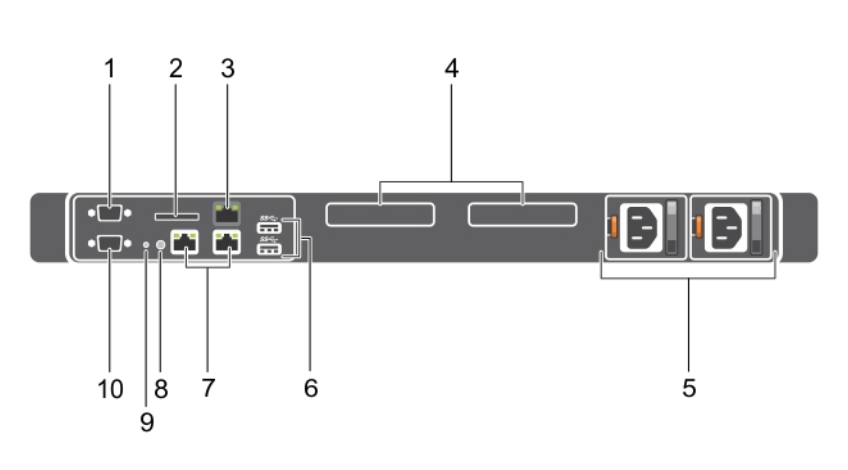

Figure 6. Back panel features and indicators

Table 4. Back panel features and indicators

Item	Indicator, button, or connector	Icon	Description
1	Serial connector		Enables you to connect a serial device to the system.
2	vFlash card slot (optional)		Enables you to connect the vFlash card.
3	iDRAC port (optional)		Enables you to install a dedicated management port card.
4	PCIe expansion card slots (2)		Enables you to connect PCI Express expansion cards.
5	Power supply unit (PSU1 and PSU2)		Enables you to install up to two 350 W redundant AC power supply units.
6	USB connectors		Enables you to connect USB devices to the system. These ports are USB 3.0-compliant.
7	Ethernet connectors		Enables you to connect Integrated 10/100/1000 Mbps NIC connectors.
8	System identification button		Enables you to locate a particular system within a rack. The identification buttons are on the front and back panels. When one of these buttons is pressed, the LCD panel on the front and the system status indicator on the back flash until one of the buttons is pressed again. Press the system identification button to turn the system ID on or off. If the system stops responding during POST, press and hold the system ID button for more than five seconds to enter BIOS progress mode. To reset iDRAC (if not disabled in F2 iDRAC setup), press and hold the button for more than 15 seconds.
9	System identification connector		Connects the optional system status indicator assembly through the optional cable management arm.
10	Video connector		Enables you to connect a VGA display to the system.

Diagnostic indicators

The diagnostic indicators on the system indicate operation and error status.

Diagnostic indicators on the front panel

NOTE: No diagnostic indicators are lit when the system is turned off. To start the system, plug it into a working power source and press the power button.

Table 5. Diagnostic indicators

Icon	Description	Condition	Corrective action
	Health indicator	The indicator turns solid blue if the system is in good health.	None required.
		The indicator flashes amber: • When the system is turned on. • When the system is in standby. • If any error condition exists. For example, a failed fan, PSU, or a hard drive.	Check the System Event Log or system messages for the specific issue. For more information about error messages, see the *Dell Event and Error Messages Reference Guide* at **Dell.com/openmanagemanuals** > **OpenManage software**. The POST process is interrupted without any video output due to invalid memory configurations. See the Getting help section.
	Hard drive indicator	The indicator flashes amber if there is a hard drive error.	Check the System Event Log to determine the hard drive that has an error. Run the appropriate Online Diagnostics test. Restart the system and run embedded diagnostics (ePSA). If the hard drives are configured in a RAID array, restart the system and enter the host adapter configuration utility program.
	Electrical indicator	The indicator flashes amber if the system experiences an electrical error (for example, voltage out of range, or a failed power supply unit (PSU) or voltage regulator).	Check the System Event Log or system messages for the specific issue. If it is due to a problem with the PSU, check the LED on the PSU. Reseat the PSU. If the problem persists, see the Getting help section.
	Temperature indicator	The indicator flashes amber if the system experiences a thermal error (for example, the ambient temperature is out of range or fan failure).	Ensure that none of the following conditions exist: • A cooling fan has been removed or has failed. • System cover, cooling shroud, EMI filler panel, memory module blank, or back filler bracket is removed. • Ambient temperature is too high. • External airflow is obstructed. See the Getting help section.
	Memory indicator	The indicator flashes amber if a memory error occurs.	Check the system event log or system messages for the location of the failed memory. Reseat the memory module. If the problem persists, see the Getting help section.

Hard drive indicator codes

Each hard drive carrier has an activity indicator and a status indicator. The indicators provide information about the current status of the hard drive. The activity LED indicates whether hard drive is currently in use or not. The status LED indicates the power condition of the hard drive.

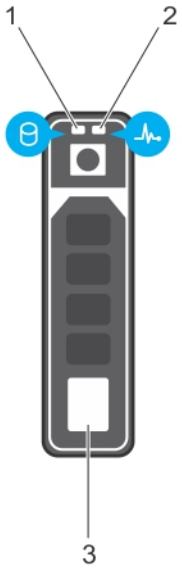

Figure 7. Hard drive indicators

1. Hard drive activity indicator
2. Hard drive status indicator
3. Hard drive

NOTE: If the hard drive is in the Advanced Host Controller Interface (AHCI) mode, the status indicator (on the right side) does not turn on.

Table 6. Hard drive indicator codes

Drive-status indicator pattern	Condition
Flashes green twice per second	Identifying drive or preparing for removal.
Off	Drive ready for insertion or removal. **NOTE: The drive status indicator remains off until all hard drives are initialized after the system is turned on. Drives are not ready for insertion or removal during this time.**
Flashes green, amber, and then turns off	Predicted drive failure
Flashes amber four times per second	Drive failed
Flashes green slowly	Drive rebuilding
Steady green	Drive online
Flashes green for three seconds, amber for three seconds, and then turns off after six seconds	Rebuild stopped

NIC indicator codes

The NIC on the back panel has an indicator that provides information about the network activity and link status. The activity LED indicates whether the NIC is currently connected or not. The link LED indicates the speed of the connected network.

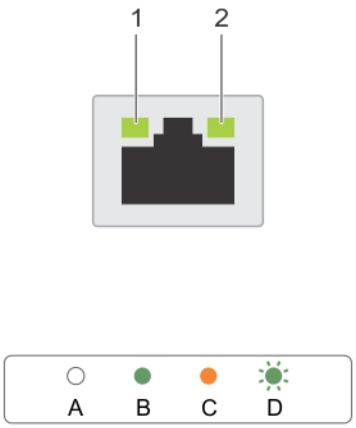

1. link indicator
2. activity indicator

Table 7. NIC indicators

Convention	Status	Condition
A	Link and activity indicators are off	The NIC is not connected to the network.
B	Link indicator is green	The NIC is connected to a valid network at its maximum port speed (1 Gbps or 10 Gbps).
C	Link indicator is amber	The NIC is connected to a valid network at less than its maximum port speed.
D	Activity indicator is flashing green	Network data is being sent or received.

Internal dual SD module indicator codes

The Internal Dual SD module (IDSDM) provides you with a redundant SD card solution. You can configure the IDSDM for storage or as the OS boot partition. The IDSDM card offers the following features:

- Dual card operation — maintains a mirrored configuration by using SD cards in both the slots and provides redundancy.

  NOTE: When the Redundancy option is set to Mirror Mode in the Integrated Devices screen of System Setup, the information is replicated from one SD card to another.
- Single card operation — single card operation is supported, but without redundancy.

The following table describes the IDSDM indicator codes:

Table 8. IDSDM indicator codes

Convention	IDSDM indicator code	Description
A	Green	Indicates that the card is online.
B	Flashing green	Indicates rebuild or activity.
C	Flashing amber	Indicates card mismatch or that the card has failed.
D	Amber	Indicates that the card is offline, has failed, or is write-protected.
E	Not lit	Indicates that the card is missing or is booting.

iDRAC Direct LED indicator codes

The iDRAC Direct LED indicator lights up to indicate that the port is connected and is being used as a part of the iDRAC subsystem.

NOTE: The iDRAC Direct LED indicator does not turn on when the USB port is used in the USB mode.

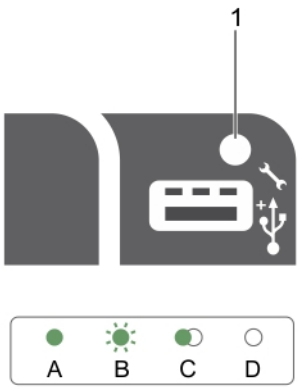

1. iDRAC Direct status indicator

The iDRAC Direct LED indicator table describes iDRAC Direct activity when configuring iDRAC Direct by using the management port (USB XML Import).

Table 9. iDRAC Direct LED indicators

Convention	iDRAC Direct LED indicator pattern	Condition
A	Green	Turns green for a minimum of two seconds to indicate the start and end of a file transfer.
B	Flashing green	Indicates file transfer or any operation tasks.
C	Green and turns off	Indicates that the file transfer is complete.
D	Not lit	Indicates that the USB is ready to be removed or that a task is complete.

The following table describes iDRAC Direct activity when configuring iDRAC Direct by using your laptop and cable (Laptop Connect):

Table 10. iDRAC Direct LED indicator patterns

iDRAC Direct LED indicator pattern	Condition
Solid green for two seconds	Indicates that the laptop is connected.
Flashing green (on for two seconds and off for two seconds)	Indicates that the laptop connected is recognized.
Turns off	Indicates that the laptop is unplugged.

Indicator codes for redundant power supply unit

Each AC power supply unit (PSU) has an illuminated translucent handle that indicates whether power is present or whether a power fault has occurred.

Figure 8. AC PSU status indicator

1. AC PSU status indicator or handle

Table 11. Redundant AC PSU status indicator

Convention	Power Indicator Pattern	Condition
A	Green	A valid power source is connected to the PSU and the PSU is operational.
B	Flashing green	When the PSU firmware is being updated, the PSU handle flashes green. **CAUTION: Do not disconnect the power cord or unplug the PSU when updating firmware. If firmware update is interrupted, the PSUs will not function. You must roll back the PSU firmware by using Dell Lifecycle Controller. For more information, see Dell Lifecycle Controller User's Guide at Dell.com/idracmanuals.**
C	Flashing green and turns off	When hot-adding a PSU, the PSU handle flashes green five times at 4 Hz rate and turns off. This indicates that there is a PSU mismatch with respect to efficiency, feature set, health status, and supported voltage. **CAUTION: For AC PSUs, use only PSUs with the Extended Power Performance (EPP) label on the back.** **NOTE: Ensure that both the PSUs are of the same capacity.** **NOTE: Mixing PSUs from previous generations of Dell PowerEdge servers can result in a PSU mismatch condition or failure to turn the system on.**
D	Flashing amber	Indicates a problem in the PSU. **CAUTION: When correcting a PSU mismatch, replace only the PSU with the flashing indicator. Swapping the other PSU to make a matched pair can result in an error condition and unexpected system shutdown. To change from a High Output configuration to a Low Output configuration or vice versa, you must turn off the system.** **CAUTION: AC PSUs support both 220 V and 110 V input voltages with the exception of Titanium PSUs, which support only 220 V. When two identical PSUs receive different input voltages, they can output different wattages, and trigger a mismatch.** **CAUTION: If two PSUs are used, they must be of the same type and have the same maximum output power.** **CAUTION: Combining AC and DC PSUs is not supported and triggers a mismatch.**

Convention	Power Indicator Pattern	Condition
E	Not lit	Power is not connected.

Locating Service Tag of your system

Your system is identified by a unique Express Service Code and Service Tag number. The Express Service Code is and Service Tag are found on the front of the system by pulling out the information tag. Alternatively, the information may be on a sticker on the chassis of the system. This information is used by Dell to route support calls to the appropriate personnel.

Your system is identified by a unique Express Service Code and Service Tag number. The Express Service Code is and Service Tag are found on the front of the system by pulling out the information tag. Alternatively, the information may be on a sticker on the chassis of the system. This information is used by Dell to route support calls to the appropriate personnel.

2

Documentation resources

This section provides information about the documentation resources for your system.

Table 12. Additional documentation resources for your system

Task	Document	Location
Setting up your system	For more information about installing and securing the system into a rack, see the rack documentation included with your rack solution.	Dell.com/poweredgemanuals
	For information about setting up and turning on the system, see the *Getting Started Guide* document that is shipped with your system.	Dell.com/poweredgemanuals
Configuring your system	For information about the iDRAC features, configuring and logging in to iDRAC, and managing your system remotely, see the Integrated Dell Remote Access Controller User's Guide.	Dell.com/idracmanuals
	For information about installing the operating system, see the operating system documentation.	Dell.com/operatingsystemmanuals
	For information about understanding Remote Access Controller Admin (RACADM) subcommands and supported RACADM interfaces, see the RACADM Command Line Reference Guide for iDRAC.	Dell.com/idracmanuals
	For information about updating drivers and firmware, see the Methods to download firmware and drivers section in this document.	To download drivers: Dell.com/support/drivers
Managing your system	For information about systems management software offered by Dell, see the Dell OpenManage Systems Management Overview Guide.	Dell.com/openmanagemanuals
	For information about setting up, using, and troubleshooting OpenManage, see the Dell OpenManage Server Administrator User's Guide.	Dell.com/openmanagemanuals
	For information about installing, using, and troubleshooting Dell OpenManage Essentials, see the Dell OpenManage Essentials User's Guide.	Dell.com/openmanagemanuals
	For information about installing and using Dell SupportAssist, see the Dell EMC SupportAssist Enterprise User's Guide.	Dell.com/serviceabilitytools
	For understanding the features of Dell Lifecycle Controller, see the Dell Lifecycle Controller User's Guide.	Dell.com/idracmanuals
	For information about partner programs enterprise systems management, see the OpenManage Connections Enterprise Systems Management documents.	Dell.com/openmanagemanuals
Working with the Dell PowerEdge RAID controllers	For information about understanding the features of the Dell PowerEdge RAID controllers (PERC), Software RAID controllers, or BOSS card and deploying the cards, see the Storage controller documentation.	Dell.com/storagecontrollermanuals

Task	Document	Location
Understanding event and error messages	For information about checking the event and error messages generated by the system firmware and agents that monitor system components, see the Dell Event and Error Messages Reference Guide.	Dell.com/openmanagemanuals > OpenManage software
Troubleshooting your system	For information about identifying and troubleshooting the PowerEdge server issues, see the Server Troubleshooting Guide.	Dell.com/poweredgemanuals

3

Technical specifications

Chassis dimensions

This section describes the physical dimensions of the system.

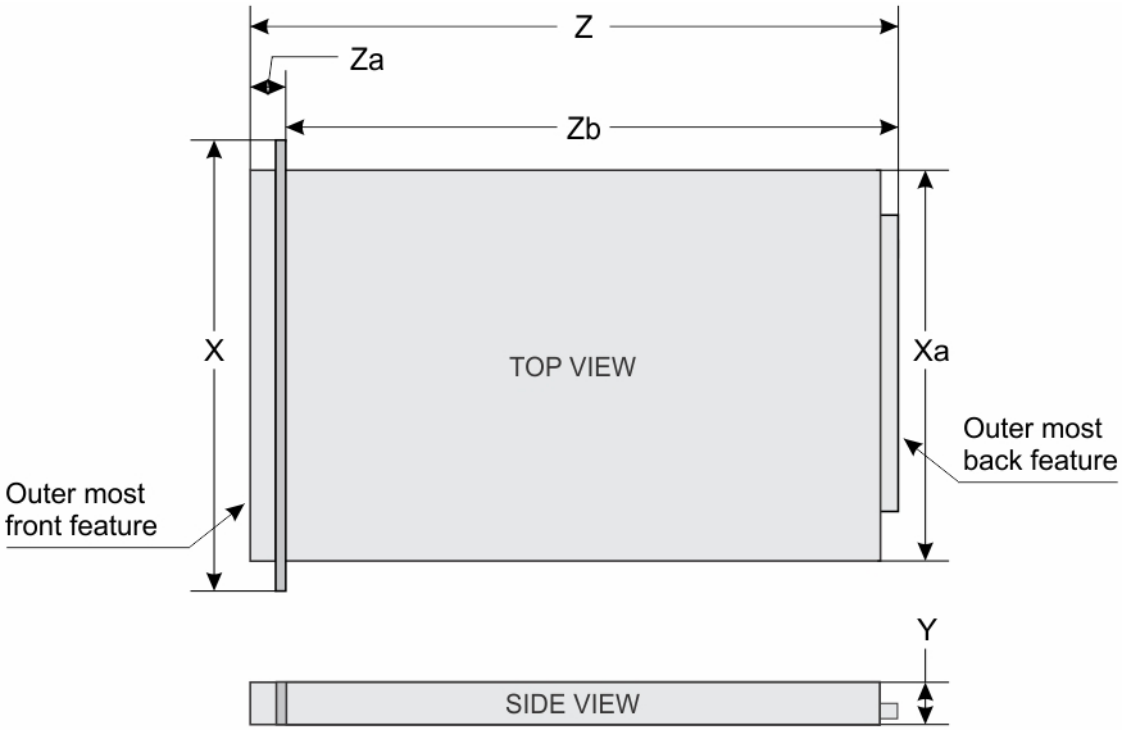

Figure 9. Chassis dimensions of the PowerEdge R330 system

Table 13. Dimensions of the Dell PowerEdge R330 system

X	Xa	Y	Z (with bezel)	Z (without bezel)	Za (with bezel)	Za (without bezel)	Zb
482.4 mm (18.99 inches)	434.0 mm (17.08 inches)	42.4 mm (1.66 inches)	681.2 mm (26.81 inches)	666.2 mm (26.22 inches)	35.1 mm (1.38 inches)	20.1 mm (0.79 inches)	607.0 mm (23.89 inches)

Chassis weight

This section describes the weight of the system.

Table 14. Chassis weight

System	Maximum weight (with all hard drives/SSDs)
PowerEdge R330	26.02 Kg (30.42 lb)

Processor specifications

Processor	Specification
Type	The PowerEdge R330 supports any one of the processors listed here: • Intel E3-1200 v5 or v6 series • Intel Core i3 6100 series • Intel Celeron G3900 series • Intel Celeron G3930 • Intel Pentium G4500 series • Intel Pentium G4600 series

Expansion bus specifications

PCI Express (PCIe) Generation 3 expansion slots (with optional expansion card risers)	Specification
LP SLOT 1	One half-height, half-length x4 link
FH SLOT 2	One full-height, half-length x8 link

PCI Express Generation 3 expansion slots (without expansion card risers)	Specification
PCIE_G3_X4	One half-height, half-length x4 link for PERC card
PCIE_G3_X8	One x8 link for riser

Memory specifications

Memory	Specification
Architecture	1600 MT/s, 1866 MT/s, 2133 MT/s, or 2400 MT/s DDR4 Unbuffered DIMMs Support for advanced ECC or memory optimized operation
Memory module sockets	Four 288-pin sockets
Memory module capacities (UDIMM)	4 GB (single-rank), 8 GB (single- and dual-rank), 16 GB (single- and dual-rank)
Minimum RAM	4 GB
Maximum RAM	64 GB

Power specifications

Power supply unit	Specification
Power rating per power supply unit	350 W (Platinum) (100–240 V AC, 50/60 Hz, 4.8 A–2.4 A)
Heat dissipation	1357.1 BTU/hr **NOTE: Heat dissipation is calculated by using the power supply wattage rating.**
Voltage	100-240 V AC, autoranging, 50/60 Hz **NOTE: This system is also designed to be connected to IT power systems with a phase-to-phase voltage not exceeding 230 V.**

Storage controller specifications

Storage controller	Specification
Storage controller type	PERC H730, PERC H330, PERC H830, PERC S130. **NOTE: Your system supports software RAID S130 and a PERC card.** **For more information on software RAID, see the Dell PowerEdge RAID Controller (PERC) documentation at Dell.com/storagecontrollermanuals.** **NOTE: The upgrade from embedded controller or Software RAID controller to Hardware RAID controller is not supported.**

Drive specifications

Hard drives

The PowerEdge R330 system supports SAS, SATA, Nearline SAS hard drives and Solid State Drives (SSDs).

Drives	Specification
Eight hard drive systems	Up to eight 2.5-inch, hot swappable SAS, SATA, SATA SSD, or Nearline SAS hard drives.
Four hard drive systems	Up to four 3.5-inch cabled hard drives, or Up to four 3.5-inch hot swappable SATA, or Nearline SAS hard drives, or Up to four 2.5-inch hot swappable SATA, or Nearline SAS hard drives in 3.5-inch adapters

Optical drive

The PowerEdge R330 system supports one optional slim SATA DVD-ROM drive or DVD+/-RW drive.

Ports and connectors specifications

USB ports

The PowerEdge R330 system supports:

- USB 2.0-compliant ports on the front panel
- USB 3.0-compliant ports on the back panel
- USB 3.0-compliant internal port

The following table provides more information about the USB specifications:

Table 15. USB specifications

System	Front panel	Back panel	Internal
PowerEdge R330	Two 4-pin, USB 2.0-compliant ports	Two 9-pin, USB 3.0-compliant port	One 9-pin, USB 3.0-compliant port

NIC ports

The PowerEdge R330 system supports two 10/100/1000 Mbps Network Interface Controller (NIC) ports on the back panel.

iDRAC8

The PowerEdge R330 system supports one optional dedicated 1 GbE Ethernet on the iDRAC Enterprise port card.

Serial connector

The serial connector connects a serial device to the system. The PowerEdge R330 system supports one serial connector on the back panel, which is a 9-pin connector, Data Terminal Equipment (DTE), 16550-compliant.

VGA ports

The Video Graphic Array (VGA) port enables you to connect the system to a VGA display. The PowerEdge R330 system supports two 15-pin VGA ports one each on the front and back panels.

SD vFlash

The PowerEdge R330 system supports one optional SD vFlash memory card on the iDRAC Enterprise port card.

NOTE: The card slot is available for use only if the iDRAC8 Enterprise license is installed on your system.

Internal Dual SD Module

The PowerEdge R330 system supports two optional flash memory card slots with an internal dual SD module.

NOTE: One card slot is dedicated for redundancy.

Video specifications

The PowerEdge R330 system supports Integrated Matrox G200 with iDRAC8 and 16 MB application memory.

Table 16. Supported video resolution options

Resolution	Refresh Rate (Hz)	Color Depth (bit)
640 x 480	60, 70	8, 16, 24
800 x 600	60, 75, 85	8, 16, 24
1024 x 768	60, 75, 85	8, 16, 24
1152 x 864	60, 75, 85	8, 16, 24

Resolution	Refresh Rate (Hz)	Color Depth (bit)
1280 x 1024	60, 75	8, 16, 24

Expanded operating temperature

NOTE: When operating in the expanded temperature range, system performance may be impacted.

NOTE: When operating in the expanded temperature range, ambient temperature warnings may be reported on the LCD and in the System Event Log.

Expanded operating temperature	Specifications
Continuous operation	5°C to 40°C (40°F to 104°F) at 5% to 85% RH with 29°C (84.2°F)dew point. **NOTE: Outside the standard operating temperature (10°C to 35°C(50°F to 95°F)), the system can operate continuously down to 5°C (40°F) or as high as 40°C (104°F).** For temperatures between 35°C(95°F) and 40°C(104°F), de-rate maximum allowable temperature by 1°C per 175 m (33.8°F per 574.14 ft) above 950 m (3116.8 ft).
≤ 1% of annual operating hours	–5°C to 45°C (23°F to 113°F) at 5% to 90% RH with 29°C (84.2°F) dew point. **NOTE: Outside the standard operating temperature (10°C to 35°C(50°F to 95°F)),, the system can operate down to –5°C (23°F)or up to 45°C (113°F) for a maximum of 1% of its annual operating hours.** For temperatures between 40°C (104°F) and 45°C (113°F), de-rate maximum allowable temperature by 1°C per 125 m (33.8°F per 410.105ft) above 950 m (3116.8 ft).
Expanded Operating Temperature Restrictions	• The operating temperature specified is for a maximum altitude of 3048 m (10,000 ft). • Non-redundant power supply units are not supported. • Non Dell qualified peripheral cards and/or peripheral cards greater than 25 W are not supported. • Do not perform a cold startup below 5°C (40°F). • Enable processor performance degrade.

Environmental specifications

NOTE: For additional information about environmental measurements for specific system configurations, see Dell.com/environmental_datasheets.

Temperature	Specifications
Storage	–40°C to 65°C (–40°F to 149°F)
Continuous operation (for altitude less than 950 m or 3117 ft)	10°C to 35°C (50°F to 95°F) with no direct sunlight on the equipment.
Fresh air	For information on fresh air, see Expanded Operating Temperature section.
Maximum temperature gradient (operating and storage)	20°C/h (68°F/h)

Relative humidity	Specifications
Storage	5% to 95% RH with 33°C (91°F) maximum dew point. Atmosphere must be non-condensing at all times.
Operating	10% to 80% Relative Humidity with 29°C (84.2°F) maximum dew point.

Maximum vibration	Specifications
Operating	0.26 G_{rms} at 5 Hz to 350 Hz (operation orientation).
Storage	1.88 G_{rms} at 10 Hz to 500 Hz for 15 min (all six sides tested).

Maximum shock	Specifications
Operating	Six consecutively executed shock pulses in the positive and negative x, y, and z axes of 40 G for up to 2.3 ms.
Storage	Six consecutively executed shock pulses in the positive and negative x, y, and z axes (one pulse on each side of the system) of 71 G for up to 2 ms.

Maximum altitude	Specifications
Operating	30482000 m (10,0006560 ft).
Storage	12,000 m (39,370 ft).

Operating temperature de-rating	Specifications
Up to 35 °C (95 °F)	Maximum temperature is reduced by 1°C/300 m (33.8°F/984.25 ft) above 950 m (3,117 ft)

The following section defines the limits to help avoid IT equipment damage and/or failure from particulates and gaseous contamination. If the levels of particulates or gaseous pollution are beyond the specified limits and cause equipment damage or failure, you may need to rectify the environmental conditions. Remediation of environmental conditions is the responsibility of the customer.

Particulate contamination	Specifications
Air filtration	Data center air filtration as defined by ISO Class 8 per ISO 14644-1 with a 95% upper confidence limit. **NOTE: Applies to data center environments only. Air filtration requirements do not apply to IT equipment designed to be used outside a data center, in environments such as an office or factory floor.** **NOTE: Air entering the data center must have MERV11 or MERV13 filtration.**
Conductive dust	Air must be free of conductive dust, zinc whiskers, or other conductive particles. **NOTE: Applies to data center and non-data center environments.**
Corrosive dust	• Air must be free of corrosive dust. • Residual dust present in the air must have a deliquescent point less than 60% relative humidity. **NOTE: Applies to data center and non-data center environments.**

Gaseous contamination	Specifications
Copper coupon corrosion rate	<300 Å/month per Class G1 as defined by ANSI/ISA71.04-1985.

Gaseous contamination	Specifications
Silver coupon corrosion rate	<200 Å/month as defined by AHSRAE TC9.9.

NOTE: Maximum corrosive contaminant levels measured at ≤50% relative humidity.

4

Initial system setup and configuration

Setting up your system

Complete the following steps to set up your system:

Steps

1. Unpack the system.
2. Install the system into the rack. For more information about installing the system into the rack, see your system *Rack Installation Placemat* at **Dell.com/poweredgemanuals**.
3. Connect the peripherals to the system.
4. Connect the system to its electrical outlet.
5. Turn the system on by pressing the power button or by using iDRAC.
6. Turn on the attached peripherals.

iDRAC configuration

The Integrated Dell Remote Access Controller (iDRAC) is designed to make system administrators more productive and improve the overall availability of Dell EMC systems. iDRAC alerts administrators to system issues, helps them perform remote system management, and reduces the need for physical access to the system.

Options to set up iDRAC IP address

You must configure the initial network settings based on your network infrastructure to enable the communication to and from iDRAC. You can set up the IP address by using one of the following interfaces:

Interfaces	Document/Section
iDRAC Settings utility	See *Dell Integrated Dell Remote Access Controller User's Guide* at **Dell.com/idracmanuals**
Dell Deployment Toolkit	See *Dell Deployment Toolkit User's Guide* at **Dell.com/openmanagemanuals**
Dell Lifecycle Controller	See *Dell Lifecycle Controller User's Guide* at **Dell.com/idracmanuals**
Chassis or Server LCD panel	See the LCD panel section

You must use the default iDRAC IP address 192.168.0.120 to configure the initial network settings, including setting up DHCP or a static IP for iDRAC.

NOTE: To access iDRAC, ensure that you install the iDRAC port card or connect the network cable to the Ethernet connector 1 on the system board.

NOTE: Ensure that you change the default user name and password after setting up the iDRAC IP address.

Log in to iDRAC

You can log in to iDRAC as:

- iDRAC user
- Microsoft Active Directory user
- Lightweight Directory Access Protocol (LDAP) user

The default user name and password are `root` and `calvin`. You can also log in by using Single Sign-On or Smart Card.

NOTE: You must have iDRAC credentials to log in to iDRAC.

For more information about logging in to iDRAC and iDRAC licenses, see the latest Integrated Dell Remote Access Controller User's Guide at **Dell.com/idracmanuals**.

Options to install the operating system

If the system is shipped without an operating system, install the supported operating system by using one of the following resources:

Table 17. Resources to install the operating system

Resources	Location
Dell Systems Management Tools and Documentation media	Dell.com/operatingsystemmanuals
Dell Lifecycle Controller	Dell.com/idracmanuals
Dell OpenManage Deployment Toolkit	Dell.com/openmanagemanuals
Dell certified VMware ESXi	Dell.com/virtualizationsolutions
Supported operating systems on Dell PowerEdge systems	Dell.com/ossupport
Installation and How-to videos for supported operating systems on Dell PowerEdge systems	Supported Operating Systems for Dell PowerEdge Systems

Methods to download firmware and drivers

You can download the firmware and drivers by using any of the following methods:

Table 18. Firmware and drivers

Methods	Location
From the Dell Support site	Dell.com/support/home
Using Dell Remote Access Controller Lifecycle Controller (iDRAC with LC)	Dell.com/idracmanuals
Using Dell Repository Manager (DRM)	Dell.com/openmanagemanuals
Using Dell OpenManage Essentials (OME)	Dell.com/openmanagemanuals
Using Dell Server Update Utility (SUU)	Dell.com/openmanagemanuals
Using Dell OpenManage Deployment Toolkit (DTK)	Dell.com/openmanagemanuals

Downloading the drivers and firmware

Dell recommends that you download and install the latest BIOS, drivers, and systems management firmware on your system.

Prerequisites

Ensure that you clear the web browser cache before downloading the drivers and firmware.

Steps

1. Go to Dell.com/support/drivers.
2. In the **Drivers & Downloads** section, type the Service Tag of your system in the **Service Tag or Express Service Code** box, and then click **Submit**.

   NOTE: If you do not have the Service Tag, select Detect My Product to allow the system to automatically detect your Service Tag, or in General support, navigate to your product.
3. Click **Drivers & Downloads**.
   The drivers that are applicable to your selection are displayed.
4. Download the drivers to a USB drive, CD, or DVD.

5

Pre-operating system management applications

You can manage basic settings and features of a system without booting to the operating system by using the system firmware.

Topics:

- Navigation keys
- System Setup
- About Boot Manager
- About Dell Lifecycle Controller
- Changing the boot order
- Choosing the system boot mode
- Creating a system and setup password
- Using your system password to secure your system
- Deleting or changing system password and setup password
- Operating with a setup password enabled
- Embedded systems management
- iDRAC Settings utility

Navigation keys

The navigation keys can help you quickly access the pre-operating system management applications.

Table 19. Navigation keys

Key	Description
<Page Up>	Moves to the previous screen.
<Page Down>	Moves to the next screen.
Up arrow	Moves to the previous field.
Down arrow	Moves to the next field.
<Enter>	Enables you to type a value in the selected field (if applicable) or follow the link in the field.
Spacebar	Expands or collapses a drop-down list, if applicable.
<Tab>	Moves to the next focus area. **NOTE: This feature is applicable for the standard graphic browser only.**
<Esc>	Moves to the previous page until you view the main screen. Pressing <Esc> in the main screen exits System BIOS or iDRAC Settings/ Device Settings/Service Tag Settings and proceeds with system boot.
<F1>	Displays the System Setup help.

System Setup

By using the **System Setup** screen, you can configure the BIOS settings, iDRAC settings, and device settings of your system.

NOTE: Help text for the selected field is displayed in the graphical browser by default. To view the help text in the text browser, press F1.

You can access system setup by using two methods:

- Standard graphical browser — The browser is enabled by default.

- Text browser — The browser is enabled by using Console Redirection.

Entering System Setup

Steps

1. Turn on, or restart your system.
2. Press F2 immediately after you see the following message:

```
F2 = System Setup
```

If your operating system begins to load before you press F2, wait for the system to finish booting, and then restart your system and try again.

System Setup details

The **System Setup Main Menu** screen details are explained as follows:

Option	Description
System BIOS	Enables you to configure BIOS settings.
iDRAC Settings	Enables you to configure iDRAC settings. The iDRAC settings utility is an interface to set up and configure the iDRAC parameters by using UEFI (Unified Extensible Firmware Interface). You can enable or disable various iDRAC parameters by using the iDRAC settings utility. For more information about this utility, see *Integrated Dell Remote Access Controller User's Guide* at **Dell.com/idracmanuals**.
Device Settings	Enables you to configure device settings.

System BIOS Settings details

About this task

The **System BIOS Settings** screen details are explained as follows:

Option	Description
System Information	Specifies information about the system such as the system model name, BIOS version, and Service Tag.
Memory Settings	Specifies information and options related to the installed memory.
Processor Settings	Specifies information and options related to the processor such as speed and cache size.
SATA Settings	Specifies options to enable or disable the integrated SATA controller and ports.
Boot Settings	Specifies options to specify the boot mode (BIOS or UEFI). Enables you to modify UEFI and BIOS boot settings.
Network Settings	Specifies options to change the network settings.
Integrated Devices	Specifies options to manage integrated device controllers and ports and specify related features and options.
Serial Communication	Specifies options to manage the serial ports and specify related features and options.
System Profile Settings	Specifies options to change the processor power management settings, memory frequency, and so on.
System Security	Specifies options to configure the system security settings, such as system password, setup password, Trusted Platform Module (TPM) security. It also manages the power and NMI buttons on the system.
Miscellaneous Settings	Specifies options to change the system date, time, and so on.

System Information details

About this task

The **System Information** screen details are explained as follows:

Option	Description
System Model Name	Specifies the system model name.
System BIOS Version	Specifies the BIOS version installed on the system.
System Management Engine Version	Specifies the current version of the Management Engine firmware.
System Service Tag	Specifies the system Service Tag.
System Manufacturer	Specifies the name of the system manufacturer.
System Manufacturer Contact Information	Specifies the contact information of the system manufacturer.
System CPLD Version	Specifies the current version of the system complex programmable logic device (CPLD) firmware.
UEFI Compliance Version	Specifies the UEFI compliance level of the system firmware.

Memory Settings details

About this task

The **Memory Settings** screen details are explained as follows:

Option	Description
System Memory Size	Specifies the memory size in the system.
System Memory Type	Specifies the type of memory installed in the system.
System Memory Speed	Specifies the memory speed.
System Memory Voltage	Specifies the memory voltage.
Video Memory	Specifies the amount of video memory.
System Memory Testing	Specifies whether the memory tests are run during system boot. Options are **Enabled** and **Disabled**. This option is set to **Disabled** by default.
Memory Operating Mode	Specifies the memory operating mode. The available option is **Optimizer Mode**.

Processor Settings details

About this task

The **Processor Settings** screen details are explained as follows:

Option	Description
Logical Processor	Enables or disables the logical processors and displays the number of logical processors. If this option is set to **Enabled**, the BIOS displays all the logical processors. If this option is set to **Disabled**, the BIOS displays only one logical processor per core. This option is set to **Enabled** by default.
QPI Speed	Enables you to control QuickPath Interconnect data rate settings.
Virtualization Technology	Enables or disables the additional hardware capabilities provided for virtualization. This option is set to **Enabled** by default.
Adjacent Cache Line Prefetch	Optimizes the system for applications that need high utilization of sequential memory access. This option is set to **Enabled** by default. You can disable this option for applications that need high utilization of random memory access.
Hardware Prefetcher	Enables or disables the hardware prefetcher. This option is set to **Enabled** by default.
DCU Streamer Prefetcher	Enables or disables the Data Cache Unit (DCU) streamer prefetcher. This option is set to **Enabled** by default.
DCU IP Prefetcher	Enables or disables the Data Cache Unit (DCU) IP prefetcher. This option is set to **Enabled** by default.
Configurable TDP	Enables you to reconfigure the processor Thermal Design Power (TDP) levels during POST based on the power and thermal delivery capabilities of the system. TDP verifies the maximum heat the cooling system is needed to dissipate. This option is set to **Nominal** by default. **NOTE: This option is only available on certain stock keeping units (SKUs) of the processors.**
X2Apic Mode	Enables or disables the X2Apic mode.
Dell Controlled Turbo	Controls the turbo engagement. Enable this option only when **System Profile** is set to **Performance**. **NOTE: Depending on the number of installed CPUs, there may be up to four processor listings.**
Number of Cores per Processor	Controls the number of enabled cores in each processor. This option is set to **All** by default.
Processor 64-bit Support	Specifies if the processor(s) support 64-bit extensions.
Processor Core Speed	Specifies the maximum core frequency of the processor.
Processor 1	The following settings are displayed for each processor installed in the system:

Option	Description
Family-Model-Stepping	Specifies the family, model, and stepping of the processor as defined by Intel.
Brand	Specifies the brand name.
Level 2 Cache	Specifies the total L2 cache.
Level 3 Cache	Specifies the total L3 cache.
Number of Cores	Specifies the number of cores per processor.

SATA Settings details

About this task

The **SATA Settings** screen details are explained as follows:

Option	Description
Embedded SATA	Enables the embedded SATA option to be set to **Off**, , **AHCI**, or **RAID** modes. This option is set to **AHCI** by default.
Security Freeze Lock	Sends Security Freeze Lock command to the Embedded SATA drives during POST. This option is applicable only for AHCI mode.
Write Cache	Enables or disables the command for Embedded SATA drives during POST.
Port A	For **AHCI** or **RAID** mode, BIOS support is always enabled.

Option	Description
Model	Specifies the drive model of the selected device.
Drive Type	Specifies the type of drive attached to the SATA port.
Capacity	Specifies the total capacity of the hard drive. This field is undefined for removable media devices such as optical drives.

Port B	For **AHCI** or **RAID** mode, BIOS support is always enabled.

Option	Description
Model	Specifies the drive model of the selected device.
Drive Type	Specifies the type of drive attached to the SATA port.
Capacity	Specifies the total capacity of the hard drive. This field is undefined for removable media devices such as optical drives.

Port C	For **AHCI** or **RAID** mode, BIOS support is always enabled.

Option	Description
Model	Specifies the drive model of the selected device.
Drive Type	Specifies the type of drive attached to the SATA port.
Capacity	Specifies the total capacity of the hard drive. This field is undefined for removable media devices such as optical drives.

Port D	For **AHCI** or **RAID** mode, BIOS support is always enabled.

Option	Description
Model	Specifies the drive model of the selected device.
Drive Type	Specifies the type of drive attached to the SATA port.
Capacity	Specifies the total capacity of the hard drive. This field is undefined for removable media devices such as optical drives.

Port E	For **AHCI** or **RAID** mode, BIOS support is always enabled.

Option	Description
Model	Specifies the drive model of the selected device.
Drive Type	Specifies the type of drive attached to the SATA port.
Capacity	Specifies the total capacity of the hard drive. This field is undefined for removable media devices such as optical drives.

Option	Description
Port F	Sets the drive type of the selected device. For **Embedded SATA settings** in **ATA** mode, set this field to **Auto** to enable BIOS support. Set it to **OFF** to turn off BIOS support. For **AHCI** or **RAID** mode, BIOS support is always enabled. **Option** — **Description** **Model** — Specifies the drive model of the selected device. **Drive Type** — Specifies the type of drive attached to the SATA port. **Capacity** — Specifies the total capacity of the hard drive. This field is undefined for removable media devices such as optical drives.

Boot Settings details

About this task

The **Boot Settings** screen details are explained as follows:

Option	Description
Boot Mode	Enables you to set the boot mode of the system. **CAUTION: Switching the boot mode may prevent the system from booting if the operating system is not installed in the same boot mode.** If the operating system supports UEFI, you can set this option to **UEFI**. Setting this field to **BIOS** allows compatibility with non-UEFI operating systems. This option is set to **BIOS** by default. **NOTE: Setting this field to UEFI disables the BIOS Boot Settings menu. Setting this field to BIOS disables the UEFI Boot Settings menu.**
Boot Sequence Retry	Enables or disables the Boot Sequence Retry feature. If this option is set to **Enabled** and the system fails to boot, the system reattempts the boot sequence after 30 seconds. This option is set to **Enabled** by default.
Hard-Disk Failover	Specifies the hard drive that is booted in the event of a hard drive failure. The devices are selected in the **Hard-Disk Drive Sequence** on the **Boot Option Setting** menu. When this option is set to **Disabled**, only the first hard drive in the list is attempted to boot. When this option is set to **Enabled**, all hard drives are attempted to boot in the order selected in the **Hard-Disk Drive Sequence**. This option is not enabled for UEFI Boot Mode.
Boot Option Settings	Configures the boot sequence and the boot devices.
BIOS Boot Settings	Enables or disables BIOS boot options. **NOTE: This option is enabled only if the boot mode is BIOS.**
UEFI Boot Settings	Enables or disables UEFI Boot options. The Boot options include **IPv4 PXE** and **IPv6 PXE**. This option is set to **IPv4** by default. **NOTE: This option is enabled only if the boot mode is UEFI.**

Network Settings screen details

The **Network Settings** screen details are explained as follows:

About this task

Option	Description
PXE Device n (n = 1 to 4)	Enables or disables the device. When enabled, a UEFI boot option is created for the device.

Option	Description
PXE Device n Settings(n = 1 to 4)	Enables you to control the configuration of the PXE device.

UEFI iSCSI Settings screen details

You can use the iSCSI Settings screen to modify iSCSI device settings. The iSCSI Settings option is available only in the UEFI boot mode. BIOS does not control network settings in the BIOS boot mode. For BIOS boot mode, the option ROM of the network controller handles the network settings.

To view the **UEFI ISCSI Settings** screen, click **System Setup Main Menu** > **System BIOS** > **Network Settings** > **UEFI ISCSI Settings**.

The **UEFI ISCSI Settings** screen details are explained as follows:

Option	Description
ISCSI Initiator Name	Specifies the name of the iSCSI initiator (iqn format).
ISCSI Device n (n = 1 to 4)	Enables or disables the iSCSI device. When disabled, a UEFI boot option is created for the iSCSI device automatically.

Integrated Devices details

About this task

The **Integrated Devices** screen details are explained as follows:

Option	Description
User Accessible USB Ports	Enables or disables the USB ports. Selecting **Only Back Ports On** disables the front USB ports, selecting **All Ports Off** disables all USB ports. The USB keyboard and mouse operate during boot process in certain operating systems. After the boot process is complete, the USB keyboard and mouse do not work if the ports are disabled. **NOTE: Selecting Only Back Ports On and All Ports Off disables the USB management port and also restricts access to iDRAC features.**
Internal USB Port	Enables or disables the internal USB port. This option is set to **Enabled** by default.
Integrated Network Card 1	Enables or disables the integrated network card.
Embedded NIC1 and NIC2	**NOTE: The Embedded NIC1 and NIC2 options are only available on systems that do not have Integrated Network Card 1.** Enables or disables the Embedded NIC1 and NIC2 options. If set to **Disabled**, the NIC may still be available for shared network access by the embedded management controller. The embedded NIC1 and NIC2 options are only available on systems that do not have Network Daughter Cards (NDCs). The Embedded NIC1 and NIC2 option is mutually exclusive with the Integrated Network Card 1 option. Configure the Embedded NIC1 and NIC2 option by using the NIC management utilities of the system.
I/O Snoop Holdoff Response	Selects the number of cycles PCI I/O can withhold snoop requests from the CPU, to allow time to complete its own write to LLC. This setting can help improve performance on workloads where throughput and latency are critical.
Embedded Video Controller	Enables or disables the **Embedded Video Controller** option. This option is set to **Enabled** by default.
Current State of Embedded Video Controller	Displays the current state of the embedded video controller. The **Current State of Embedded Video Controller** option is a read-only field. If the Embedded Video Controller is the only display capability in the system (that is, no add-in graphics card is installed), then the Embedded Video Controller is automatically used as the primary display even if the **Embedded Video Controller** setting is set to **Disabled**.

Option	Description
OS Watchdog Timer	If your system stops responding, this watchdog timer aids in the recovery of your operating system. When this option is set to **Enabled**, the operating system initializes the timer. When this option is set to **Disabled** (the default), the timer does not have any effect on the system.
Memory Mapped I/O above 4 GB	Enables or disables the support for PCIe devices that need large amounts of memory. This option is set to **Enabled** by default.
Slot Disablement	Enables or disables the available PCIe slots on your system. The slot disablement feature controls the configuration of PCIe cards installed in the specified slot. Slots must be disabled only when the installed peripheral card prevents booting into the operating system or causes delays in system startup. If the slot is disabled, both the Option ROM and UEFI drivers are disabled.

Serial Communication details

About this task

The **Serial Communication** screen details are explained as follows:

Option	Description
Serial Communication	Selects serial communication devices (Serial Device 1 and Serial Device 2) in BIOS. BIOS console redirection can also be enabled and the port address can be specified. This option is set to **Auto** by default.
Serial Port Address	Enables you to set the port address for serial devices. This option is set to **Serial Device 1=COM2, Serial Device 2=COM1** by default. **NOTE: You can use only Serial Device 2 for the Serial Over LAN (SOL) feature. To use console redirection by SOL, configure the same port address for console redirection and the serial device.** **NOTE: Every time the system boots, the BIOS syncs the serial MUX setting saved in iDRAC. The serial MUX setting can independently be changed in iDRAC. Loading the BIOS default settings from within the BIOS setup utility may not always revert the serial MUX setting to the default setting of Serial Device 1.**
External Serial Connector	Enables you to associate the External Serial Connector to Serial Device 1, Serial Device 2, or the Remote Access Device by using this option. **NOTE: Only Serial Device 2 can be used for Serial Over LAN (SOL). To use console redirection by SOL, configure the same port address for console redirection and the serial device.** **NOTE: Every time the system boots, the BIOS syncs the serial MUX setting saved in iDRAC. The serial MUX setting can independently be changed in iDRAC. Loading the BIOS default settings from within the BIOS setup utility may not always revert this setting to the default setting of Serial Device 1.**
Failsafe Baud Rate	Specifies the failsafe baud rate for console redirection. The BIOS attempts to determine the baud rate automatically. This failsafe baud rate is used only if the attempt fails, and the value must not be changed. This option is set to `115200` by default.
Remote Terminal Type	Sets the remote console terminal type. This option is set to `VT 100/VT 220` by default.
Redirection After Boot	Enables or disables the BIOS console redirection when the operating system is loaded. This option is set to **Enabled** by default.

System Profile Settings details

About this task

The **System Profile Settings** screen details are explained as follows:

Option	Description
System Profile	Sets the system profile. If you set the **System Profile** option to a mode other than **Custom**, the BIOS automatically sets the rest of the options. You can only change the rest of the options if the mode is set to **Custom**. This option is set to **Performance Per Watt (OS)**. **NOTE: All the parameters on the system profile setting screen are available only when the System Profile option is set to Custom.**
CPU Power Management	Sets the CPU power management. This option is set to **OS DBPM** by default.
Memory Frequency	Sets the speed of the memory. You can select **Maximum Performance**, **Maximum Reliability**, or a specific speed.
Turbo Boost	Enables or disables the processor to operate in the turbo boost mode. This option is set to **Enabled** by default.
C1E	Enables or disables the processor to switch to a minimum performance state when it is idle. This option is set to **Enabled** by default.
C States	Enables or disables the processor to operate in all available power states. This option is set to **Enabled** by default.
Memory Refresh Rate	Sets the memory refresh rate to either 1x or 2x. This option is set to **1x** by default.
Uncore Frequency	Enables you to select the **Processor Uncore Frequency** option. Dynamic mode enables the processor to optimize power resources across the cores and uncore during runtime. The optimization of the uncore frequency to either save power or optimize performance is influenced by the setting of the **Energy Efficiency Policy** option.
Energy Efficient Policy	Enables you to select the **Energy Efficient Policy** option. The CPU uses the setting to manipulate the internal behavior of the processor and determines whether to target higher performance or better power savings.
Number of Turbo Boot Enabled Cores for Processor 1	Controls the number of turbo boost enabled cores for processor 1. The maximum number of cores is enabled by default.
Monitor/Mwait	Enables the Monitor/Mwait instructions in the processor. This option is set to **Enabled** for all system profiles, except **Custom** by default. **NOTE: This option can be disabled only if the C States option in the Custom mode is set to disabled.** **NOTE: When C States is set to Enabled in the Custom mode, changing the Monitor/Mwait setting does not impact the system power or performance.**

System Security Settings details

About this task

The **System Security Settings** screen details are explained as follows:

Option	Description
Intel AES-NI	Improves the speed of applications by performing encryption and decryption by using the Advanced Encryption Standard Instruction Set (AES-NI). This option is set to **Enabled** by default.
System Password	Sets the system password. This option is set to **Enabled** by default and is read-only if the password jumper is not installed in the system.
Setup Password	Sets the setup password. This option is read-only if the password jumper is not installed in the system.
Password Status	Locks the system password. This option is set to **Unlocked** by default.
TPM Security	**NOTE: The TPM menu is available only when the TPM module is installed.**

Option	Description
	Enables you to control the reporting mode of the TPM. The **TPM Security** option is set to **Off** by default. You can only modify the TPM Status, TPM Activation, and Intel TXT fields if the **TPM Status** field is set to either **On with Pre-boot Measurements** or **On without Pre-boot Measurements**.
TPM Information	Changes the operational state of the TPM. This option is set to **No Change** by default.
TPM Status	Specifies the TPM status.
TPM Command	**CAUTION: Clearing the TPM results in the loss of all keys in the TPM. The loss of TPM keys may affect booting to the operating system.** Clears all the contents of the TPM. The **TPM Clear** option is set to **No** by default.
Intel TXT	Enables or disables the Intel Trusted Execution Technology (TXT) option. To enable the **Intel TXT** option, virtualization technology and TPM Security must be enabled with Pre-boot measurements. This option is set to **Off** by default.
Power Button	Enables or disables the power button on the front of the system. This option is set to **Enabled** by default.
NMI Button	Enables or disables the NMI button on the front of the system. This option is set to **Disabled** by default.
AC Power Recovery	Sets how the system behaves after AC power is restored to the system. This option is set to **Last** by default.
AC Power Recovery Delay	Sets the time delay for the system to power up after AC power is restored to the system. This option is set to **Immediate** by default.
User Defined Delay (60s to 240s)	Sets the **User Defined Delay** option when the **User Defined** option for **AC Power Recovery Delay** is selected.
UEFI Variable Access	Provides varying degrees of securing UEFI variables. When set to **Standard** (the default), UEFI variables are accessible in the operating system per the UEFI specification. When set to **Controlled**, selected UEFI variables are protected in the environment and new UEFI boot entries are forced to be at the end of the current boot order.
Secure Boot Policy	When Secure Boot policy is set to **Standard**, the BIOS uses the system manufacturer's key and certificates to authenticate pre-boot images. When Secure Boot policy is set to **Custom**, the BIOS uses the user-defined key and certificates. Secure Boot policy is set to **Standard** by default.
Secure Boot Policy Summary	Specifies the list of certificates and hashes that secure boot uses to authenticate images.

Secure Boot Custom Policy Settings screen details

Secure Boot Custom Policy Settings is displayed only when the **Secure Boot Policy** option is set to **Custom**.

About this task

To view the **Secure Boot Custom Policy Settings** screen, click **System Setup Main Menu** > **System BIOS** > **System Security** > **Secure Boot Custom Policy Settings**.

The **Secure Boot Custom Policy Settings** screen details are explained as follows:

Option	Description
Platform Key	Imports, exports, deletes, or restores the platform key (PK).
Key Exchange Key Database	Enables you to import, export, delete, or restore entries in the Key Exchange Key (KEK) Database.
Authorized Signature Database	Imports, exports, deletes, or restores entries in the Authorized Signature Database (db).
Forbidden Signature Database	Imports, exports, deletes, or restores entries in the Forbidden Signature Database (dbx).

Miscellaneous Settings details

About this task

The **Miscellaneous Settings** screen details are explained as follows:

Option	Description
System Time	Enables you to set the time on the system.
System Date	Enables you to set the date on the system.
Asset Tag	Specifies the asset tag and enables you to modify it for security and tracking purposes.
Keyboard NumLock	Enables you to set whether the system boots with the NumLock enabled or disabled. This option is set to **On** by default. **NOTE: This option does not apply to 84-key keyboards.**
F1/F2 Prompt on Error	Enables or disables the F1/F2 prompt on error. This option is set to **Enabled** by default. The F1/F2 prompt also includes keyboard errors.
Load Legacy Video Option ROM	Enables you to determine whether the system BIOS loads the legacy video (INT 10H) option ROM from the video controller. Selecting **Enabled** in the operating system does not support UEFI video output standards. This field is available only for UEFI boot mode. You cannot set the option to **Enabled** if **UEFI Secure Boot** mode is enabled.
In-System Characterization	Enables or disables **In-System Characterization**. This option is set to **Disabled** by default. The two other options are **Enabled** and **Enabled - No Reboot**. **NOTE: The default setting for In-System Characterization is subject to change in future BIOS releases.** When enabled, In-System Characterization (ISC) executes during POST upon detecting relevant change(s) in system configuration to optimize system power and performance. ISC takes about 20 seconds to execute, and system reset is needed for ISC results to be applied. The **Enabled - No Reboot** option executes ISC and continues without applying ISC results until the next time system reset occurs. The **Enabled** option executes ISC and forces an immediate system reset so that ISC results can be applied. It takes the system longer to be ready due to the forced system reset. When disabled, ISC does not execute.

About Boot Manager

Boot manager enables you to add, delete, and arrange boot options. You can also access System Setup and boot options without restarting the system.

Viewing Boot Manager

To enter **Boot Manager**:

Steps

1. Turn on, or restart your system.
2. Press F11 when you see the following message:

```
F11 = Boot Manager
```

If your operating system begins to load before you press F11, allow the system to complete the booting, and then restart your system and try again.

Boot Manager main menu

Menu item	Description
Continue Normal Boot	The system attempts to boot to devices starting with the first item in the boot order. If the boot attempt fails, the system continues with the next item in the boot order until the boot is successful or no more boot options are found.
One-shot Boot Menu	Enables you to access boot menu, where you can select a one-time boot device to boot from.
Launch System Setup	Enables you to access System Setup.
Launch Lifecycle Controller	Exits the Boot Manager and invokes the Dell Lifecycle Controller program.
System Utilities	Enables you to launch System Utilities menu such as System Diagnostics and UEFI shell.

About Dell Lifecycle Controller

Dell Lifecycle Controller enables you to perform tasks such as configuring BIOS and hardware settings, deploying an operating system, updating drivers, changing RAID settings, and saving hardware profiles. For more information about Dell Lifecycle Controller, see the documentation at **Dell.com/idracmanuals**.

Changing the boot order

About this task

You may have to change the boot order if you want to boot from a USB key or an optical drive. The following instructions may vary if you have selected **BIOS** for **Boot Mode**.

Steps

1. On the **System Setup Main Menu** screen, click **System BIOS** > **Boot Settings**.
2. Click **Boot Option Settings** > **Boot Sequence**.
3. Use the arrow keys to select a boot device, and use the plus (+) and minus (-) sign keys to move the device down or up in the order.
4. Click **Exit**, and then click **Yes** to save the settings on exit.

Choosing the system boot mode

System Setup enables you to specify one of the following boot modes for installing your operating system:

- BIOS boot mode (the default) is the standard BIOS-level boot interface.
- Unified Extensible Firmware Interface (UEFI) (the default) boot mode is an enhanced 64-bit boot interface. If you have configured your system to boot to UEFI mode, it replaces the system BIOS.

1. From the **System Setup Main Menu**, click **Boot Settings**, and select **Boot Mode**.
2. Select the boot mode you want the system to boot into.

   CAUTION: Switching the boot mode may prevent the system from booting if the operating system is not installed in the same boot mode.
3. After the system boots in the specified boot mode, proceed to install your operating system from that mode.

NOTE:

- **Operating systems must be UEFI-compatible to be installed from the UEFI boot mode. DOS and 32-bit operating systems do not support UEFI and can only be installed from the BIOS boot mode.**
- **For the latest information about supported operating systems, go to Dell.com/ossupport.**

Creating a system and setup password

Prerequisites

Ensure that the password jumper is enabled. The password jumper enables or disables the system password and setup password features. For more information, see the System board jumper settings section.

NOTE: If the password jumper setting is disabled, the existing system password and setup password are deleted and you need not provide the system password to boot the system.

Steps

1. To enter System Setup, press F2 immediately after turning on or rebooting your system.
2. On the **System Setup Main Menu** screen, click **System BIOS** > **System Security**.
3. On the **System Security** screen, verify that **Password Status** is set to **Unlocked**.
4. In the **System Password** field, type your system password, and press Enter or Tab.

   Use the following guidelines to assign the system password:

   - A password can have up to 32 characters.
   - The password can contain the numbers 0 through 9.
   - Only the following special characters are allowed: space, (”), (+), (,), (-), (.), (/), (;), ([), (\), (]), (`).

   A message prompts you to reenter the system password.
5. Reenter the system password, and click **OK**.
6. In the **Setup Password** field, type your setup password and press Enter or Tab.
   A message prompts you to reenter the setup password.
7. Reenter the setup password, and click **OK**.
8. Press Esc to return to the System BIOS screen. Press Esc again.

   A message prompts you to save the changes.

   NOTE: Password protection does not take effect until the system reboots.

Using your system password to secure your system

About this task

If you have assigned a setup password, the system accepts your setup password as an alternate system password.

Steps

1. Turn on or reboot your system.
2. Type the system password and press Enter.

Next steps

When **Password Status** is set to **Locked**, type the system password and press Enter when prompted at reboot.

NOTE: If an incorrect system password is typed, the system displays a message and prompts you to reenter your password. You have three attempts to type the correct password. After the third unsuccessful attempt, the system displays an error message that the system has stopped functioning and must be turned off. Even after you turn off and restart the system, the error message is displayed until the correct password is entered.

Deleting or changing system password and setup password

Prerequisites

Ensure that the password jumper is **Enabled** and the **Password Status** is set to **Unlocked** before attempting to delete or change the existing system or setup password.

NOTE: You cannot delete or change an existing system or setup password if the Password Status is set to Locked.

Steps

1. To enter System Setup, press F2 immediately after a turning on or restarting your system.
2. On the **System Setup Main Menu** screen, click **System BIOS** > **System Security**.
3. On the **System Security** screen, verify that **Password Status** is set to **Unlocked**.
4. In the **System Password** field, alter or delete the existing system password, and then press Enter or Tab.
5. In the **Setup Password** field, alter or delete the existing setup password, and then press Enter or Tab.

   If you change the system and setup password a message prompts you to reenter the new password. If you delete the system and setup password, a message prompts you to confirm the deletion.
6. Press Esc to return to the **System BIOS** screen. Press Esc again, and a message prompts you to save the changes.
7. Select **Setup Password**, change or delete the existing setup password and press **Enter** or **Tab**.

   NOTE: If you change the system password or setup password, a message prompts you to reenter the new password. If you delete the system password or setup password, a message prompts you to confirm the deletion.

Operating with a setup password enabled

If **Setup Password** is set to **Enabled**, type the correct setup password before modifying the system setup options.

If you do not type the correct password in three attempts, the system displays the following message:

```
Invalid Password! Number of unsuccessful password attempts: <x> System Halted! Must power
down.
```

Even after you turn off and restart the system, the error message is displayed until the correct password is typed. The following options are exceptions:

- If **System Password** is not set to **Enabled** and is not locked through the **Password Status** option, you can assign a system password. For more information, see the System Security Settings screen section.
- You cannot disable or change an existing system password.

NOTE: You can use the password status option with the setup password option to protect the system password from unauthorized changes.

Embedded systems management

The Dell Lifecycle Controller provides advanced embedded systems management throughout the lifecycle of the system. The Dell Lifecycle Controller can be started during the boot sequence and can function independently of the operating system.

NOTE: Certain platform configurations may not support the full set of features provided by the Dell Lifecycle Controller.

For more information about setting up the Dell Lifecycle Controller, configuring hardware and firmware, and deploying the operating system, see the Dell Lifecycle Controller documentation at **Dell.com/idracmanuals**.

iDRAC Settings utility

The iDRAC settings utility is an interface to set up and configure the iDRAC parameters by using UEFI. You can enable or disable various iDRAC parameters by using the iDRAC settings utility.

NOTE: Accessing some of the features on the iDRAC settings utility needs the iDRAC Enterprise License upgrade.

For more information about using iDRAC, see *Dell Integrated Dell Remote Access Controller User's Guide* at **Dell.com/idracmanuals**.

Entering the iDRAC Settings utility

Steps

1. Turn on or restart the managed system.
2. Press F2 during Power-on Self-test (POST).
3. On the **System Setup Main Menu** page, click **iDRAC Settings**.
   The **iDRAC Settings** screen is displayed.

Changing the thermal settings

The iDRAC settings utility enables you to select and customize the thermal control settings for your system.

1. Click **iDRAC Settings** > **Thermal**.
2. Under **SYSTEM THERMAL PROFILE** > **Thermal Profile**, select one of the following options:
   - Default Thermal Profile Settings
   - Maximum Performance (Performance Optimized)
   - Minimum Power (Performance per Watt Optimized)
3. Under **USER COOLING OPTIONS**, set the **Fan Speed Offset**, **Minimum Fan Speed**, and **Custom Minimum Fan Speed**.
4. Click **Back** > **Finish** > **Yes**.

6

Installing and removing system components

Safety instructions

NOTE: Whenever you need to lift the system, get others to assist you. To avoid injury, do not attempt to lift the system by yourself.

WARNING: Opening or removing the system cover while the system is powered on may expose you to a risk of electric shock.

CAUTION: Do not operate the system without the cover for a duration exceeding five minutes.

CAUTION: Many repairs may only be done by a certified service technician. You should only perform troubleshooting and simple repairs as authorized in your product documentation, or as directed by the online or telephone service and support team. Damage due to servicing that is not authorized by Dell is not covered by your warranty. Read and follow the safety instructions that are shipped with your product.

NOTE: Dell recommends that you always use a static mat and static strap while working on components inside the system.

NOTE: To ensure proper operation and cooling, all bays in the system and system fans must be populated always with either a component or with a blank.

Before working inside your system

Steps

1. Ensure that you follow the Safety instructions.
2. Turn off the system, including any attached peripherals.
3. Disconnect the system from the electrical outlet and disconnect the peripherals.
4. If applicable, remove the system from the rack. For more information, see the *Rack Installation* placemat at **Dell.com/poweredgemanuals**.
5. If installed, remove the front bezel.
6. Remove the system cover.

Related tasks

Removing the optional front bezel
Removing the system cover

After working inside your system

Prerequisites

Follow the safety guidelines listed in the Safety instructions section.

Steps

1. Install the system cover.
2. If applicable, install the system into the rack.
   For more information, see the *Rack Installation* placemat at **Dell.com/poweredgemanuals**.

3. If removed, install the front bezel.
4. Reconnect the peripherals and connect the system to the electrical outlet.
5. Turn on the system, including any attached peripherals.

Related tasks

Installing the optional front bezel
Installing the system cover

Recommended tools

You need the following tools to perform the installation and removal procedures:

- Phillips #2 screwdriver
- Plastic scribe
- Wrist grounding strap connected to ground

Front bezel (optional)

The front bezel is attached to the front side of the system and prevents accidents while removing the hard drive or when pressing the reset or power button. The front bezel can also be locked for additional security.

Removing the optional front bezel

Prerequisites

Follow the safety guidelines listed in the Safety instructions section.

Steps

1. Unlock the keylock at the left end of the bezel.
2. Lift the release latch next to the keylock.
3. Rotate the left end of the bezel away from the front panel.
4. Unhook the right end of the bezel and pull the bezel away from the system.

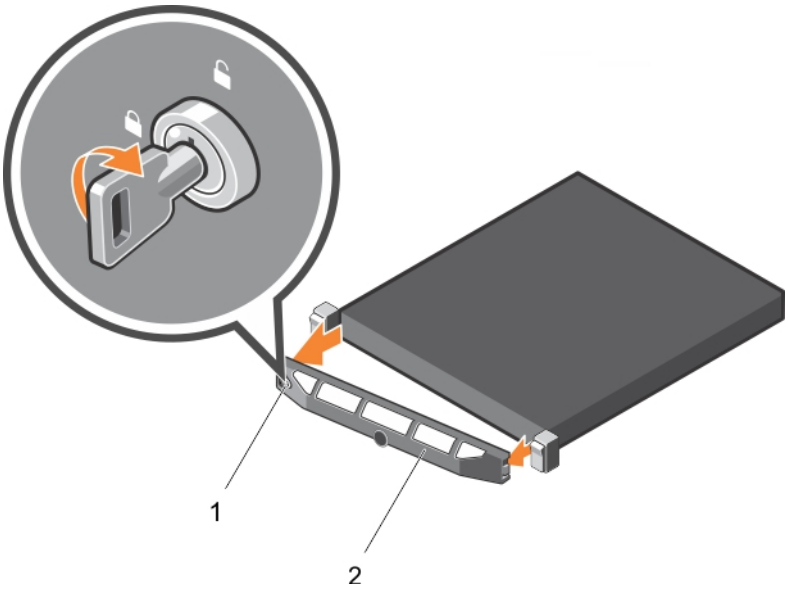

Figure 10. Removing the optional front bezel

a. bezel lock
b. front bezel

Installing the optional front bezel

Prerequisites

Follow the safety guidelines listed in the Safety instructions section.

Steps

1. Locate and remove the bezel key.

   NOTE: The bezel key is attached to the back of the bezel.

2. Hook the right end of the bezel onto the chassis.
3. Fit the free end of the bezel onto the system.
4. Lock the bezel by using the key.

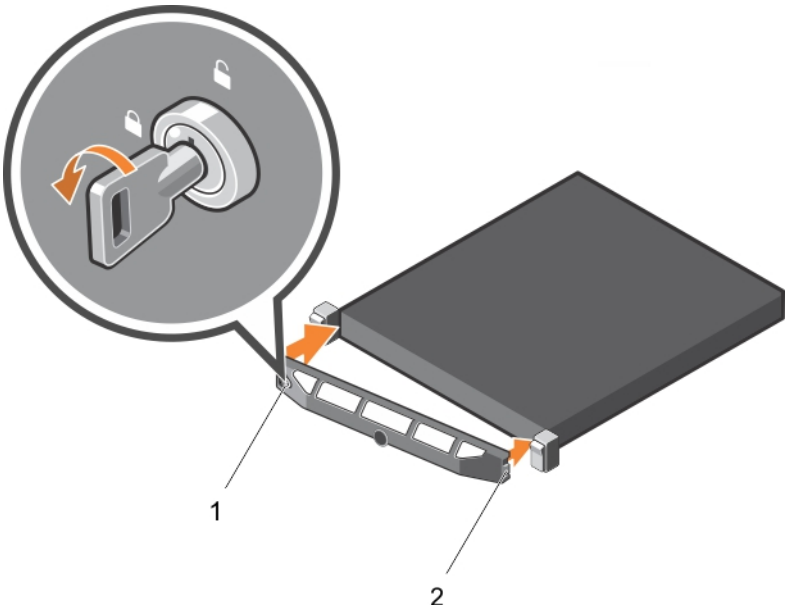

Figure 11. Installing the optional front bezel

a. lock
b. front bezel

System cover

Removing the system cover

Prerequisites

1. Ensure that you follow the Safety instructions.
2. Turn off the system, including any attached peripherals.
3. Disconnect the system from the electrical outlet and peripherals.
4. If installed, remove the front bezel.

Steps

1. Turn the latch release lock to the unlock position.
2. Lift the latch and rotate the latch toward the back of the system.

   The system cover slides back, disengaging the tabs on the system cover from the slots on the chassis.

3. Hold the cover on both sides, and lift the cover away from the system.

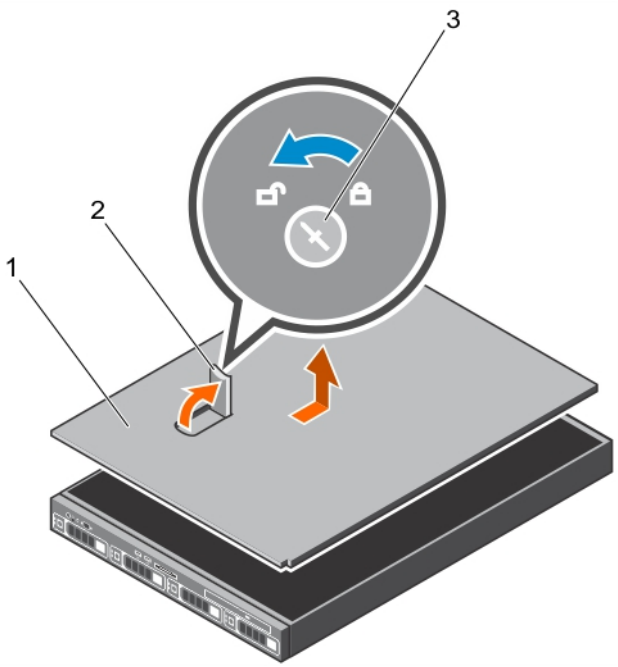

Figure 12. Removing the system cover

a. latch release lock
b. latch
c. system cover

Next steps

Install the system cover.

Related tasks

Removing the optional front bezel
Installing the system cover

Installing the system cover

Prerequisites

1. Follow the safety guidelines listed in the Safety instructions section.
2. Follow the procedure listed in the Before working inside your system section.
3. Ensure that all internal cables are connected and placed out of the way, and no tools or extra parts are left inside the system.

Steps

1. Align the slots on the system cover with the tabs on the chassis.
2. Push the system cover latch down.

   The system cover slides forward and the slots on the system cover engage with the tabs on the chassis. The system cover latch locks into place when the system cover is completely engaged with the tabs on the chassis.
3. Rotate the latch release lock clockwise to the locked position.

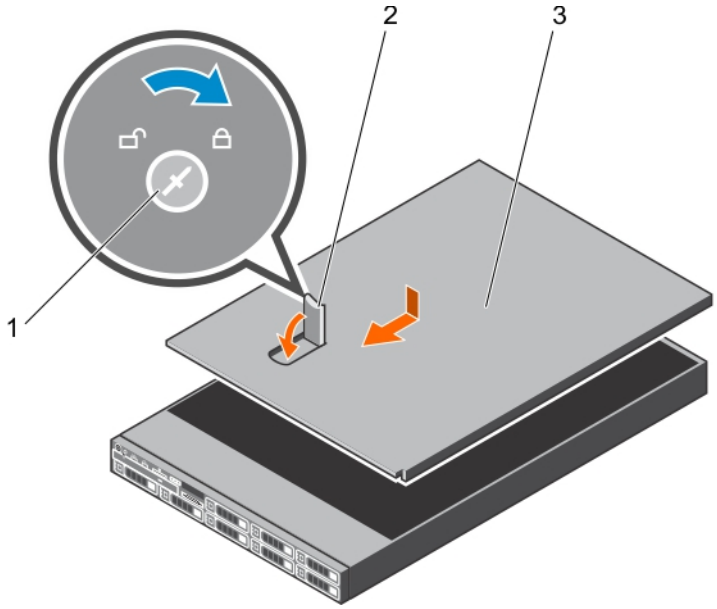

Figure 13. Installing the system cover

a. latch release lock
b. latch
c. system cover

Next steps

1. If removed, install the front bezel.
2. Reconnect the peripherals and connect the system to the electrical outlet.
3. Turn on the system, including any attached peripherals.
4. Follow the procedure listed in the After working inside your system section.

Related tasks

Installing the optional front bezel

Inside the system

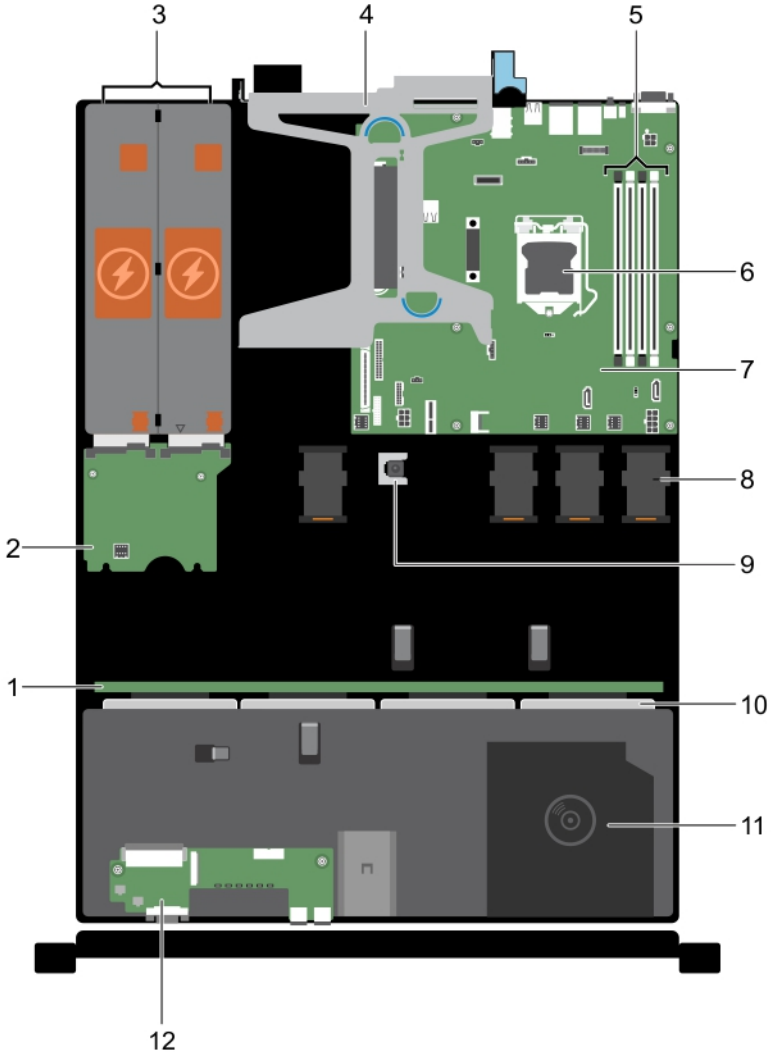

Figure 14. Inside the system—with four 3.5-inch hot swappable hard drives

1. hard drive backplane
2. power interposer board
3. power supply unit (2)
4. expansion card riser
5. memory module sockets
6. processor
7. system board
8. cooling fan (4)
9. intrusion switch
10. hard drives
11. optical drive (optional)
12. control panel assembly

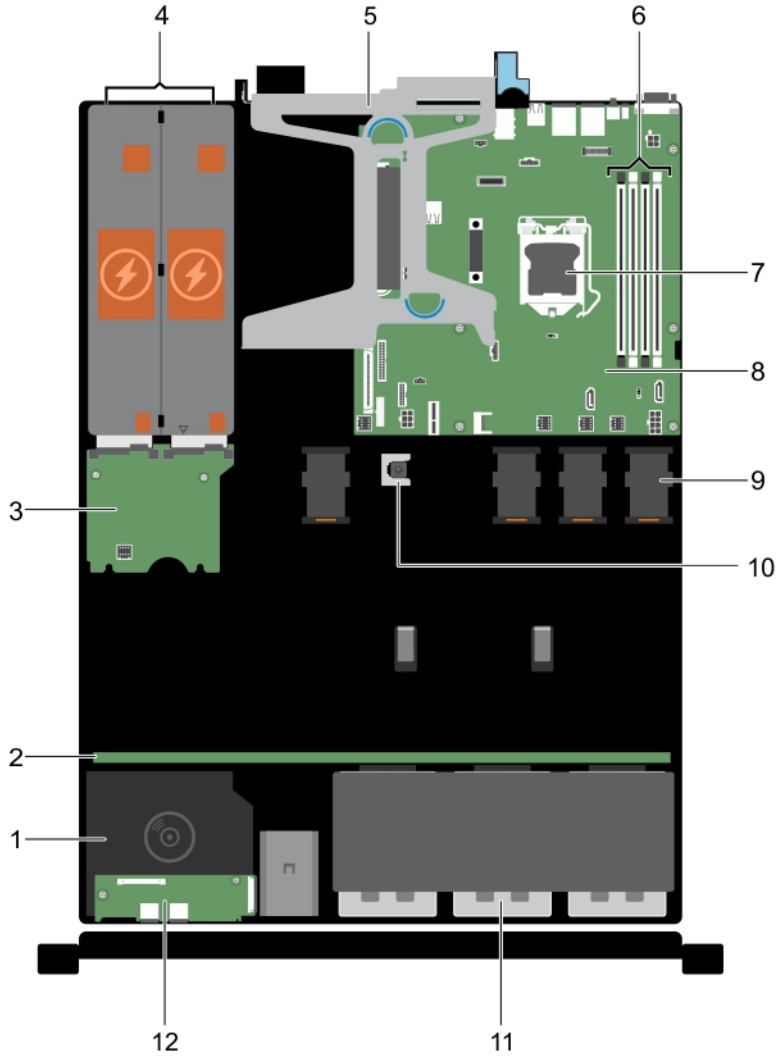

Figure 15. Inside the system—with eight 2.5-inch hard drives

1. optical drive (optional)
2. hard drive backplane
3. power interposer board
4. power supply unit (2)
5. expansion card riser
6. memory module socket (4)
7. processor
8. system board
9. cooling fan (4)
10. intrusion switch
11. hard drive (8)
12. control panel assembly

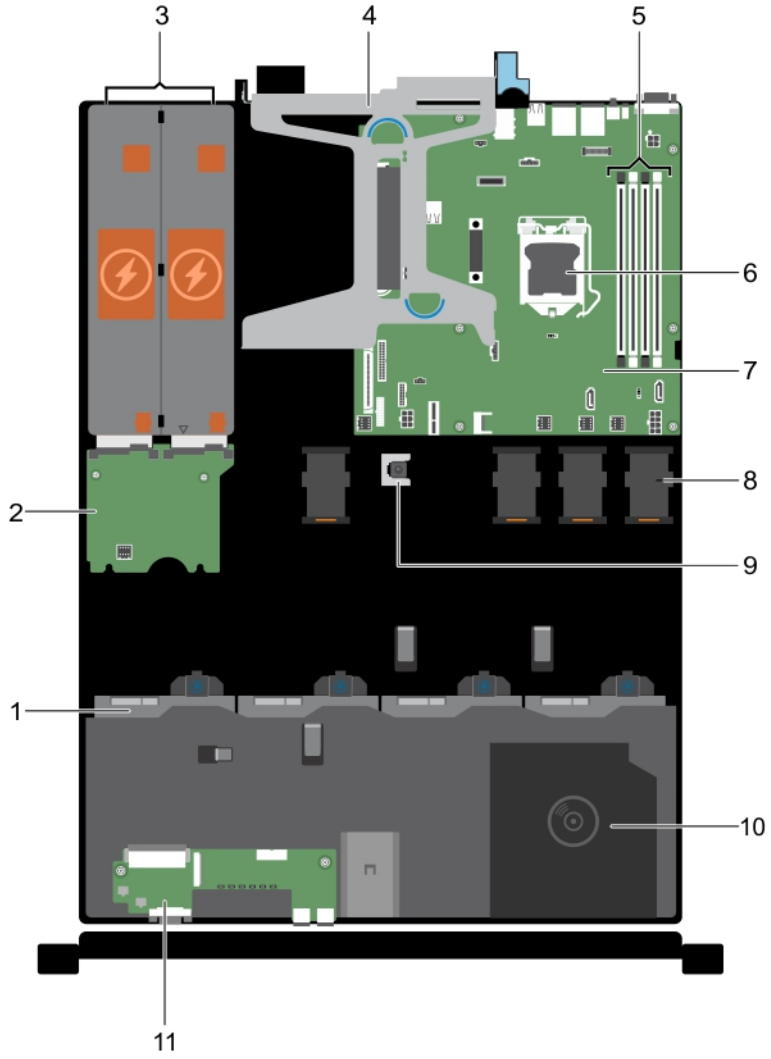

Figure 16. Inside the system—with four 3.5-inch cabled hard drives

1. hard drive (4)
2. power interposer board
3. power supply unit (2)
4. expansion card riser
5. memory module socket (4)
6. processor
7. system board
8. cooling fan (4)
9. intrusion switch
10. optional optical drive or 1.8-inch solid state drives (optional)
11. control panel assembly

Intrusion switch

Removing the intrusion switch

Prerequisites

CAUTION: Many repairs may only be done by a certified service technician. You should only perform troubleshooting and simple repairs as authorized in your product documentation, or as directed by the online or telephone service and support team. Damage due to servicing that is not authorized by Dell is not covered by your warranty. Read and follow the safety instructions that are shipped with your product.

1. Follow the safety guidelines listed in safety instructions section.

2. Follow the procedure listed in the Before working inside your system section.
3. Keep the plastic scribe ready.

Steps

1. Disconnect the intrusion switch cable from the connector on the system board.
2. Remove the cable from the cable routing latch.
3. Using a plastic scribe, slide the intrusion switch and remove it from under the intrusion switch slot.

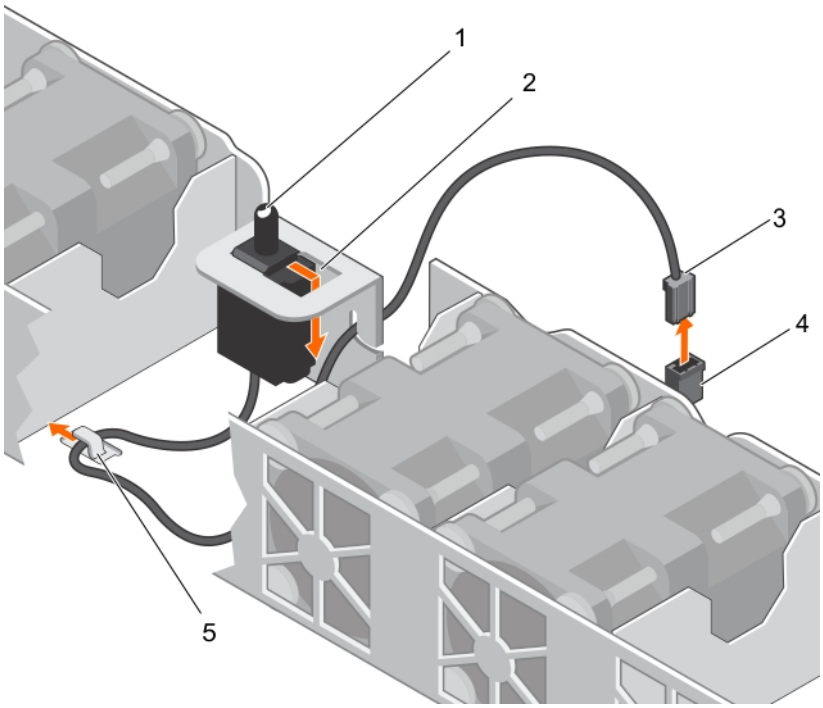

Figure 17. Removing the intrusion switch

1. intrusion switch
2. intrusion switch slot
3. intrusion switch cable
4. intrusion switch connector on the system board
5. cable routing clip

Next steps

1. Install the intrusion switch.
2. Follow the procedure listed in the After working inside your system section.

Related tasks

Installing the intrusion switch

Installing the intrusion switch

Prerequisites

CAUTION: Many repairs may only be done by a certified service technician. You should only perform troubleshooting and simple repairs as authorized in your product documentation, or as directed by the online or telephone service and support team. Damage due to servicing that is not authorized by Dell is not covered by your warranty. Read and follow the safety instructions that are shipped with your product.

1. Follow the safety guidelines listed in the Safety instructions section.
2. Follow the procedure listed in the Before working inside your system section.

Steps

1. Insert the intrusion switch into the intrusion switch slot.
2. Slide the intrusion switch until it locks into position.
3. Route the intrusion switch cable through the cable routing tab.
4. Connect the intrusion switch cable to the connector on the system board.

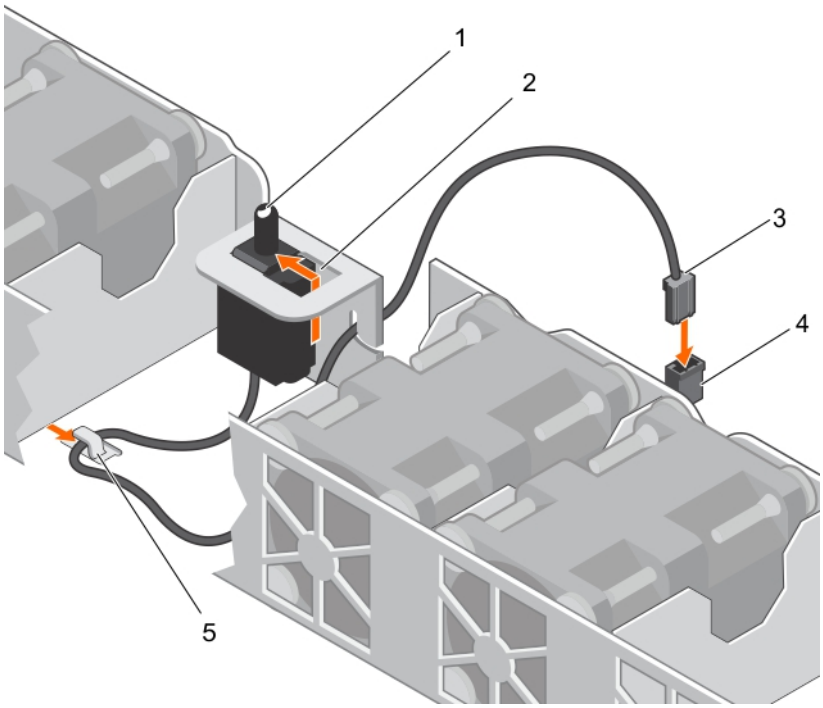

Figure 18. Installing the intrusion switch

Next steps

1. Follow the procedure listed in After working inside your system section.

Cooling shroud

The cooling shroud aerodynamically directs the airflow across the entire system. The airflow passes through all the critical parts of the system, where the vacuum pulls air across the entire surface area of the heat sink, thus allowing increased cooling.

Removing the cooling shroud

Prerequisites

CAUTION: Many repairs may only be done by a certified service technician. You should only perform troubleshooting and simple repairs as authorized in your product documentation, or as directed by the online or telephone service and support team. Damage due to servicing that is not authorized by Dell is not covered by your warranty. Read and follow the safety instructions that are shipped with your product.

1. Ensure that you follow the Safety instructions.
2. Follow the procedure listed in Before working inside your system.

CAUTION: Never operate your system with the cooling shroud removed. The system may get overheated quickly, resulting in shutdown of the system and loss of data.

Steps

Hold the cooling shroud and lift it away from the system.

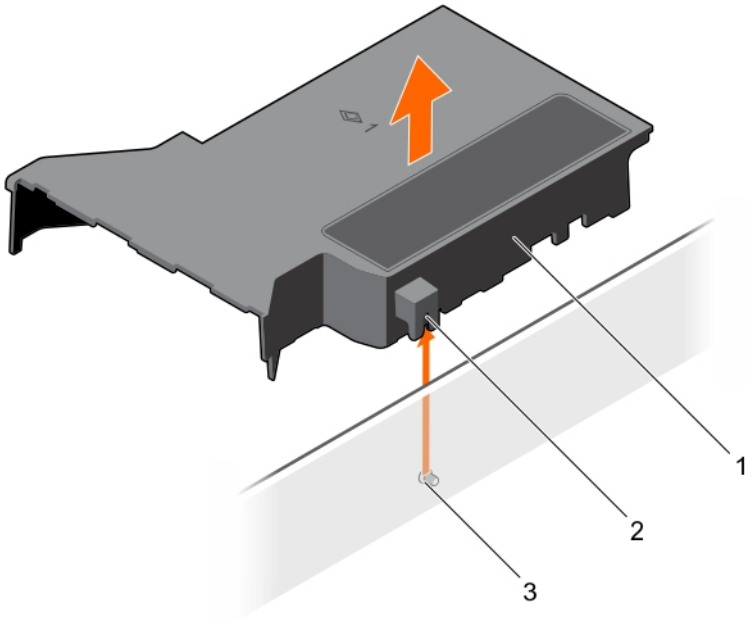

Figure 19. Removing the cooling shroud

a. cooling shroud
b. guide on the cooling shroud
c. guide pin on the chassis wall

Next steps

1. Install the cooling shroud.
2. Follow the procedure listed in After working inside your system.

Related tasks

Installing the cooling shroud

Installing the cooling shroud

Prerequisites

CAUTION: Many repairs may only be done by a certified service technician. You should only perform troubleshooting and simple repairs as authorized in your product documentation, or as directed by the online or telephone service and support team. Damage due to servicing that is not authorized by Dell is not covered by your warranty. Read and follow the safety instructions that are shipped with your product.

1. Ensure that you follow the Safety instructions.
2. Follow the procedure listed in Before working inside your system.

Steps

1. Align the guide on the cooling shroud with the guide pin on the chassis wall.
2. Lower the cooling shroud into the chassis until it is firmly seated.
   When firmly seated, the memory socket numbers marked on the cooling shroud align with the respective memory sockets.

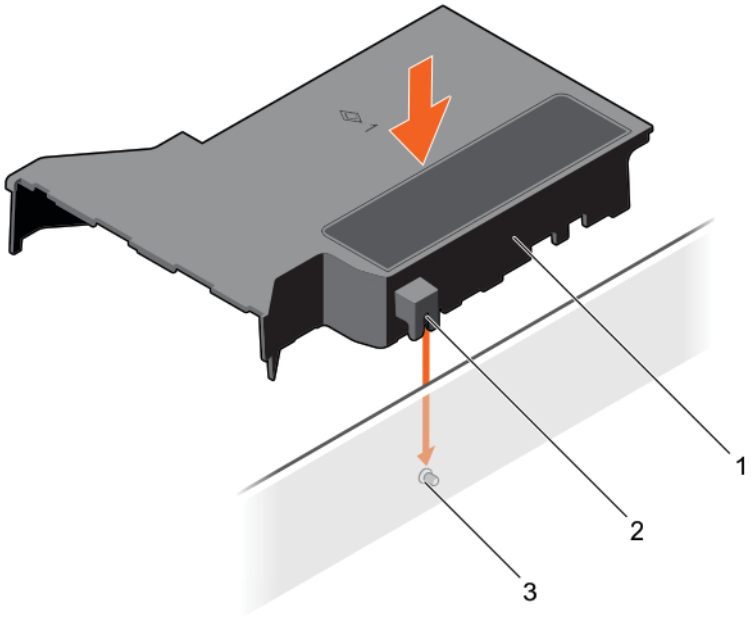

Figure 20. Installing the cooling shroud

a. cooling shroud
b. guide on the cooling shroud
c. guide pin on the chassis wall

Next steps

Follow the procedure listed in After working inside your system.

System memory

Your system supports DDR4 ECC unbuffered DIMMs (UDIMMs).

NOTE: MT/s indicates memory module speed in Mega Transfers per second.

Memory bus operating frequency can be 1600 MT/s, 1866 MT/s, 2133 MT/s, or 2400 MT/s depending on the following factors:

- System profile selected (for example, Performance Optimized, Custom, or Dense Configuration Optimized)
- Maximum supported memory module frequency of the processors

The system contains four memory sockets — two sets of 2–sockets each. Each 2–socket set is organized into one channel. In each 2-socket set, the first socket release lever is marked white and the second socket release lever is marked black.

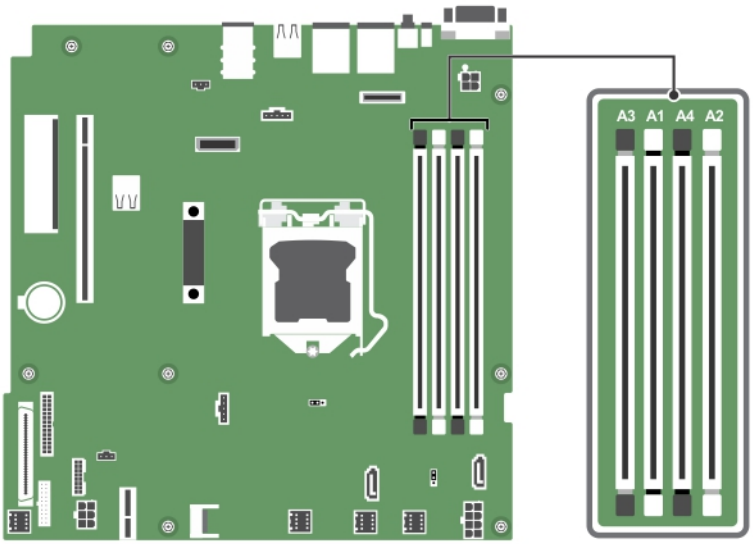

Figure 21. Memory socket locations on the system board

Memory channels are organized as follows:

Processor 1	channel 0: memory sockets A1 and A3
	channel 1: memory sockets A2 and A4

The following table shows the memory populations and operating frequencies for the supported configurations:

Table 20. Memory populations and operating frequencies for the supported configurations

Memory module type	Memory modules populated per channel	Operating frequency (in MT/s)	Maximum memory module ranks per channel
		1.2 V	
ECC (UDIMM)	1	1600, 1866, 2133, 2400	Dual rank or single rank
	2	1600, 1866, 2133, 2400	Dual rank or single rank

General memory module installation guidelines

Your system supports Flexible Memory Configuration, enabling the system to be configured and run in any valid chipset architectural configuration. The following are the recommended guidelines for installing memory modules:

- x4 and x8 DRAM-based DIMMs can be mixed.
- Up to two dual- or single-rank ECC UDIMMs can be populated per channel.
- Populate DIMM sockets only if a processor is installed. For single-processor systems, sockets A1 to A4 are available.
- Populate all sockets with white release levers first, and then all the sockets with black release levers.
- When mixing memory modules with different capacities, populate the sockets with memory modules with the highest capacity first. For example, if you want to mix 4 GB and 8 GB DIMMs, populate 8 GB DIMMs in the sockets with white release levers and 4 GB DIMMs in the sockets with black release levers.
- Memory modules of different capacities can be mixed provided other memory population rules are followed (for example, 4 GB and 8 GB memory modules can be mixed).
- Mixing of more than two DIMM capacities in a system is not supported.
- Populate two DIMMs per processor (one DIMM per channel) at a time to maximize performance.

Sample memory configurations

The following table shows sample memory configurations for a single processor configuration.

NOTE: **1R and 2R in the following table indicate single and dual-rank memory modules respectively.**

Table 21. Memory configurations—single processor

Populated system capacity (in GB)	Memory module size (in GB)	Number of memory modules	Memory module rank, organization, and frequency	memory module slot population
4	4	1	1R, x8, 2400 MT/s 1R, x8, 2133 MT/s 1R, x8, 1866 MT/s	A1
8	4	2	1R, x8, 2400 MT/s 2R, x8, 2400 MT/s	A1, A2
	8	1	1R, x8, 2400 MT/s 1R, x8, 2133 MT/s 2R, x8, 2133 MT/s 1R, x8, 1866 MT/s 2R, x8, 1866 MT/s	A1
16	4	4	1R, x8, 2400 MT/s 2R, x8, 2400 MT/s	A1, A2, A3, A4
	8	2	1R, x8, 2400 MT/s 1R, x8, 2133 MT/s 2R, x8, 2133 MT/s	A1, A2
	16	1	2R, x8, 2400 MT/s 1R, x8, 1866 MT/s 2R, x8, 1866 MT/s	A1
32	8	4	1R, x8, 2400 MT/s 2R, x8, 2400 MT/s	A1, A2, A3, A4
	16	2	2R, x8, 2400 MT/s 1R, x8, 2133 MT/s 2R, x8, 2133 MT/s 1R, x8, 1866 MT/s 2R, x8, 1866 MT/s	A1, A2
64	16	4	2R, x8, 2400 MT/s 1R, x8, 2133 MT/s 2R, x8, 2133 MT/s 1R, x8, 1866 MT/s 2R, x8, 1866 MT/s	A1, A2, A3, A4

Removing a memory module

Prerequisites

CAUTION: Many repairs may only be done by a certified service technician. You should only perform troubleshooting and simple repairs as authorized in your product documentation, or as directed by the online or telephone service and support team. Damage due to servicing that is not authorized by Dell is not covered by your warranty. Read and follow the safety instructions that are shipped with your product.

1. Ensure that you follow the Safety instructions.
2. Follow the procedure listed in Before working inside your system.
3. Remove the cooling shroud.

NOTE: The memory modules are hot to touch for some time after the system has been powered down. Allow the memory modules to cool before handling them. Handle the memory modules by the card edges and avoid touching the components or metallic contacts on the memory module.

Steps

1. Locate the appropriate memory module socket.
2. To release the memory module from the socket, simultaneously press the ejectors on both ends of the memory module socket.

   CAUTION: Handle each memory module only by the card edges, ensuring not to touch the middle of the memory module or metallic contacts.
3. Lift the memory module away from the chassis.

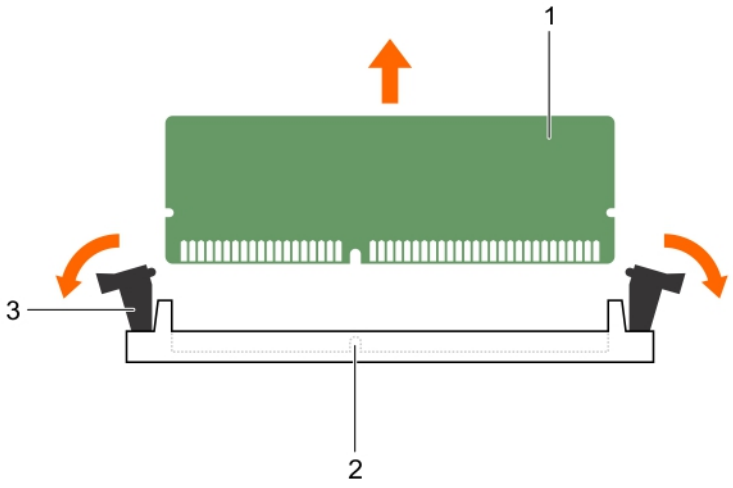

Figure 22. Removing the memory module

a. memory module
b. memory module socket
c. memory module ejector (2)

Next steps

1. Install the memory module.
2. If you are removing a memory module permanently, install a memory module blank.

   NOTE: The procedure to install a memory module blank is similar to the procedure to install a memory module.
3. Install the cooling shroud.

Related tasks

Installing a memory module
Removing the cooling shroud
Installing the cooling shroud

Installing a memory module

Prerequisites

CAUTION: Many repairs may only be done by a certified service technician. You should only perform troubleshooting and simple repairs as authorized in your product documentation, or as directed by the online or telephone service and support team. Damage due to servicing that is not authorized by Dell is not covered by your warranty. Read and follow the safety instructions that are shipped with your product.

1. Ensure that you read the Safety instructions.
2. Follow the procedure listed in Before working inside your system.
3. Remove the cooling shroud.

NOTE: The memory modules are hot to touch for some time after the system has been powered down. Allow the memory modules to cool before handling them. Handle the memory modules by the card edges and avoid touching the components or metallic contacts on the memory module.

Steps

1. Locate the appropriate memory module socket.

   CAUTION: Handle each memory module only by the card edges, ensuring not to touch the middle of the memory module or metallic contacts.

   CAUTION: To prevent damage to the memory module or the memory module socket during installation, do not bend or flex the memory module; insert both ends of the memory module simultaneously.
2. If a memory module or a memory module blank is installed in the socket, remove it.

   NOTE: The procedure to remove a memory module blank is similar to the procedure to remove a memory module.

   NOTE: Retain the removed memory module blank(s) for future use.
3. Align the edge connector of the memory module with the alignment key of the memory module socket, and insert the memory module in the socket.

   NOTE: The memory module socket has an alignment key that enables you to install the memory module in the socket in only one orientation.

   CAUTION: Do not apply pressure at the center of the memory module; apply pressure at both ends of the memory module evenly.
4. Press the memory module with your thumbs until the socket levers firmly click into place.

   When the memory module is properly seated in the socket, the levers on the memory module socket align with the levers on the other sockets that have memory modules installed.

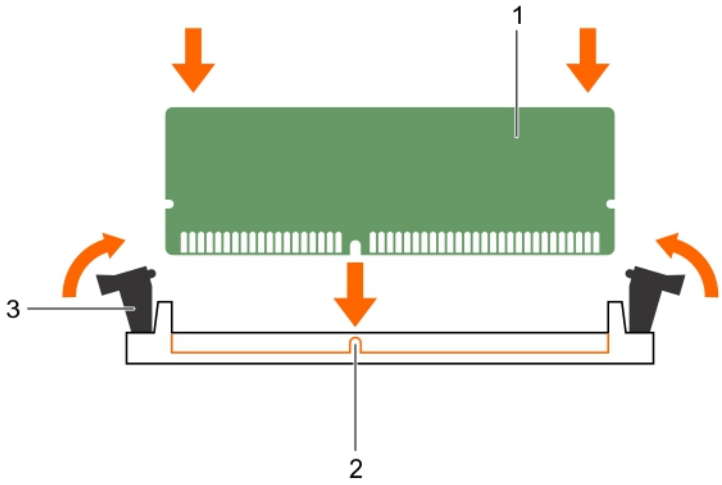

Figure 23. Installing the memory module

a. memory module
b. alignment key
c. memory module socket ejector (2)

Next steps

1. Install the cooling shroud.
2. Follow the procedure listed in After working inside your system.
3. Press F2 to enter System Setup, and check the **System Memory** setting.

   The **System Memory Size** indicates the installed memory.
4. If the **System Memory Size** is incorrect, one or more of the memory modules may not be installed properly. Ensure that the memory modules are firmly seated in their sockets.
5. Run the system memory test in the system diagnostics.

Related tasks

Removing the cooling shroud
Installing the cooling shroud

Hard drives

Your system supports enterprise class hard drives. Enterprise class drives are designed for 24x7 operating environment. Selecting the correct drive class enables the critical areas of quality, functionality, performance, and reliability to be optimized for the target implementation.

Choosing the right drive type depends on the usage pattern. Due to industry advances, in some cases, the larger capacity drives have been changed to a larger sector size. The larger sector size can have impacts on operating systems and applications. For more information about these hard drives, see the *512e and 4Kn Disk Formats* whitepaper and *4K Sector HDD FAQ* document at **Dell.com/poweredgemanuals.**

CAUTION: Before attempting to remove or install a hard drive while the system is running, see the documentation for the storage controller card to ensure that the host adapter is configured correctly to support hot swappable hard drive removal and insertion.

CAUTION: Do not turn off or restart your system while the hard drive is being formatted. Doing so can cause a hard drive failure.

Use only hard drives that have been tested and approved for use with the hard drive backplane.

When you format a hard drive, allow enough time for the formatting to be completed. Be aware that high-capacity hard drives can take a long time to format.

Supported hard drive configurations

Depending on the configuration, your system supports one of the following:

Four hard drive systems	Up to four 3.5-inch hot-swappable SATA hard drives, or SATA solid state drives (SSDs) Up to four 3.5-inch cabled hard drives
Six hard drive systems	Up to four 3.5-inch cabled hard drives and two optional 1.8-inch SSDs in the optical drive slot
Eight hard drive systems	Up to eight 2.5-inch, hot-swappable hard drives/SSDs

NOTE: SAS/SATA hard drives cannot be mixed in a system.

The hot-swappable hard drives connect to the system board through the hard drive backplane. Hot-swappable hard drives are supplied in hot-swappable hard drive carriers that fit in the hard drive slots.

Removing a 2.5-inch hard drive blank

Prerequisites

CAUTION: Many repairs may only be done by a certified service technician. You should only perform troubleshooting and simple repairs as authorized in your product documentation, or as directed by the online or telephone service and support team. Damage due to servicing that is not authorized by Dell is not covered by your warranty. Read and follow the safety instructions that are shipped with your product.

CAUTION: To maintain proper system cooling, all empty hard drive slots must have hard drive blanks installed.

1. Follow the safety guidelines listed in the Safety instructions section.
2. If installed, remove the front bezel.

Steps

Press the release button and slide the hard drive blank out of the hard drive slot.

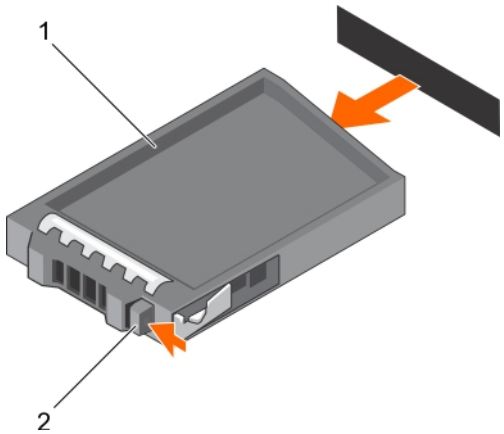

Figure 24. Removing a 2.5-inch hard drive blank

a. hard drive blank
b. release button

Next steps

If removed, install the front bezel.

Related tasks

Removing the optional front bezel
Installing the optional front bezel

Installing a 2.5-inch hard drive blank

Prerequisites

1. Follow the safety guidelines listed in the Safety instructions section.
2. If installed, remove the front bezel.

Steps

Insert the hard drive blank into the hard drive slot until the release button clicks into place.

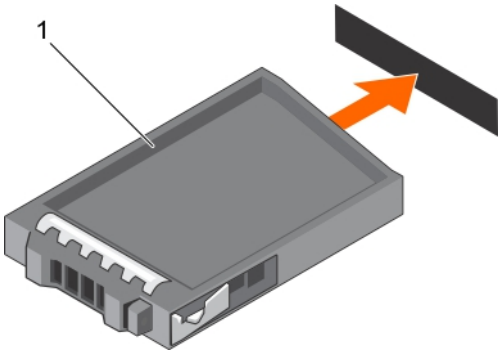

Figure 25. Installing a 2.5-inch hard drive blank

a. hard drive blank

Next steps

If removed, install the front bezel.

Removing a 3.5-inch hard drive blank

Prerequisites

CAUTION: Many repairs may only be done by a certified service technician. You should only perform troubleshooting and simple repairs as authorized in your product documentation, or as directed by the online or telephone service and support team. Damage due to servicing that is not authorized by Dell is not covered by your warranty. Read and follow the safety instructions that came with the product.

CAUTION: To maintain proper system cooling, all empty hard drive slots must have hard drive blanks installed.

1. Follow the safety guidelines listed in the Safety instructions section.
2. If installed, remove the front bezel.

Steps

Press the release button and slide the blank out of the hard drive slot.

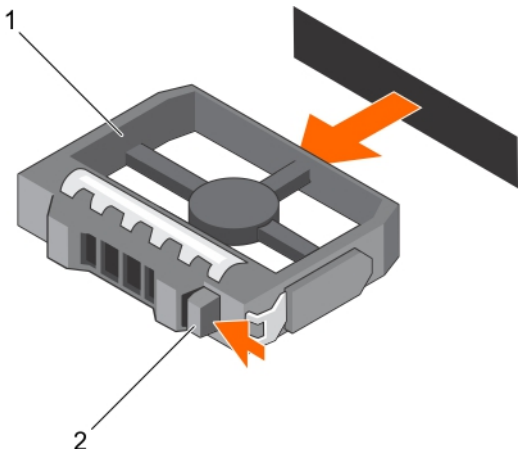

Figure 26. Removing a 3.5-inch hard drive blank

a. hard drive blank
b. release button

Next steps

If applicable, install the front bezel.

Installing a 3.5-inch hard drive blank

Prerequisites

1. Follow the safety guidelines listed in the Safety instructions section.
2. If installed, remove the front bezel.

Steps

Insert the hard drive blank into the hard drive slot until the release button clicks into place.

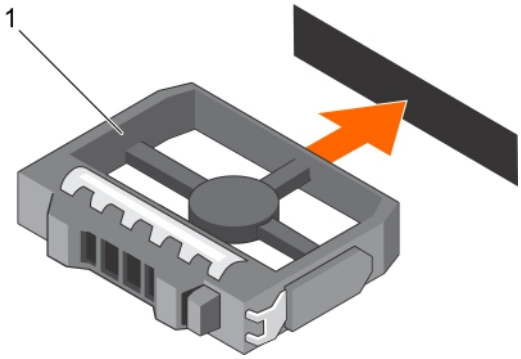

Figure 27. Installing a 3.5-inch hard drive blank

a. hard drive blank

Next steps

If applicable, install the front bezel.

Removing a 3.5-inch cabled hard drive carrier

Prerequisites

CAUTION: Many repairs may only be done by a certified service technician. You should only perform troubleshooting and simple repairs as authorized in your product documentation, or as directed by the online or telephone service and

support team. Damage due to servicing that is not authorized by Dell is not covered by your warranty. Read and follow the safety instructions that are shipped with your product.

1. Follow the safety guidelines listed in the Safety instructions section.
2. Follow the procedure listed in the Before working inside your system section.
3. If installed, remove the front bezel.
4. If connected, disconnect the power and data cable from the hard drive.

NOTE: The empty cabled hard drive carrier can be used as a blank.

Steps

1. Press the release tab on the hard drive carrier and slide the hard drive carrier out of the hard drive slot.

   CAUTION: To maintain proper system cooling, all empty hard drive slots must have hard drive carrier blanks installed.

2. Insert a hard drive blank in the empty hard drive slot.

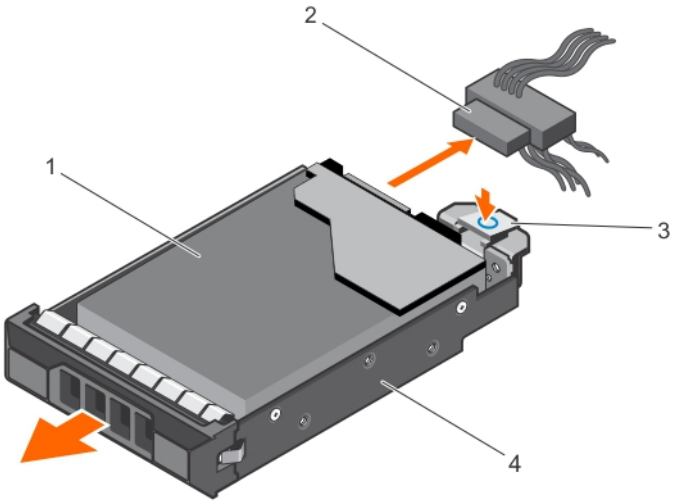

Figure 28. Removing a cabled hard drive carrier

1. hard drive
2. power/data cable
3. release tab
4. hard drive carrier

Next steps

1. If required, install a hard drive in the hard drive carrier and install the hard drive carrier into the hard drive slot in the system.
2. If you are not replacing the hard drive immediately, insert a hard drive carrier in the empty hard drive slot.
3. Follow the procedure listed in After working inside your system.

Related tasks

Installing a 3.5-inch cabled hard drive carrier

Installing a 3.5-inch cabled hard drive carrier

Prerequisites

CAUTION: Many repairs may only be done by a certified service technician. You should only perform troubleshooting and simple repairs as authorized in your product documentation, or as directed by the online or telephone service and support team. Damage due to servicing that is not authorized by Dell is not covered by your warranty. Read and follow the safety instructions that are shipped with your product.

1. Follow the safety guidelines listed in the Safety instructions section.
2. Follow the procedure listed in the Before working inside your system section.
3. Keep the Phillips #2 screwdriver ready.

Steps

1. Press the release tab on the hard drive carrier and slide the hard drive carrier out of the system.
2. Install the hard drive into the hard drive carrier.
   a) Secure the hard drive in place with screws.
3. Insert the hard drive carrier into the hard drive slot, and push the hard drive carrier until it clicks into place.
4. Connect the power and data cable to the hard drive.
   - If connecting to the integrated SATA controller (SATA hard drives only), connect the SATA data cable to the SATA_A-D connector on the system board.
   - If connecting to a SAS RAID controller card (SAS or SATA hard drives), connect the data cable to the connector on the card.

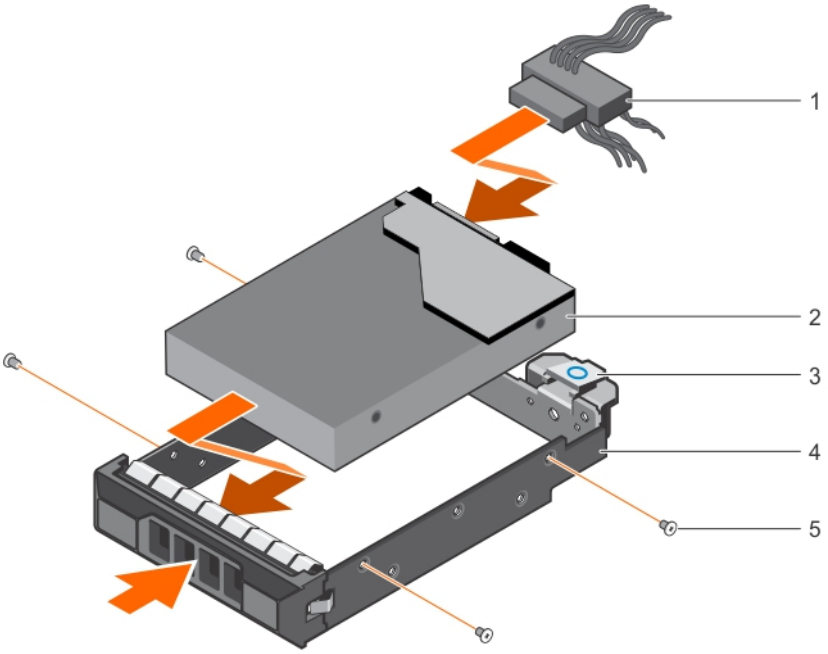

Figure 29. Installing a cabled hard drive carrier

1. power/data cable
2. hard drive
3. release tab
4. hard drive carrier
5. screw (4)

Next steps

1. Enter System Setup and ensure that the controller of the hard drive is enabled.
2. Exit System Setup and reboot the system.
3. Install any software required for the hard drive operation as described in the documentation for the hard drive.

Removing a cabled hard drive from a hard drive carrier

Prerequisites

CAUTION: Many repairs may only be done by a certified service technician. You should only perform troubleshooting and simple repairs as authorized in your product documentation, or as directed by the online or telephone service and support team. Damage due to servicing that is not authorized by Dell is not covered by your warranty. Read and follow the safety instructions that are shipped with your product.

1. Ensure that you follow the Safety instructions.
2. Follow the procedure listed in Before working inside your system.
3. Remove the cabled hard drive carrier.
4. Keep the Phillips #2 screwdriver ready.

Steps

1. Remove the screws from the side of the cabled hard drive carrier.
2. Remove the hard drive from the hard drive carrier.

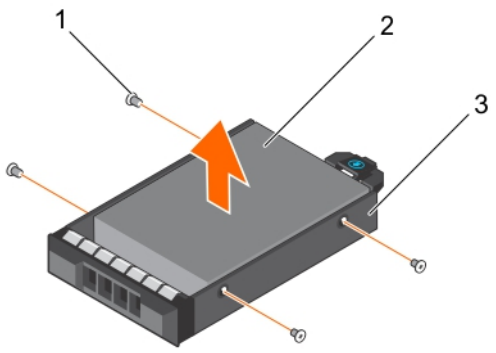

Figure 30. Removing a cabled hard drive from a cabled hard drive carrier

a. screw (4)
b. cabled hard drive
c. cabled hard drive carrier

Next steps

1. Install the cabled hard drive in the hard drive carrier.
2. Install the hard drive carrier into the slot.
3. Follow the procedure listed in After working inside your system.

Related tasks

Removing a 3.5-inch cabled hard drive carrier
Installing a cabled hard drive into a hard drive carrier
Installing a 3.5-inch cabled hard drive carrier

Installing a cabled hard drive into a hard drive carrier

Prerequisites

CAUTION: Many repairs may only be done by a certified service technician. You should only perform troubleshooting and simple repairs as authorized in your product documentation, or as directed by the online or telephone service and support team. Damage due to servicing that is not authorized by Dell is not covered by your warranty. Read and follow the safety instructions that are shipped with your product.

1. Ensure that you follow the Safety instructions.
2. Follow the procedure listed in Before working inside your system.
3. Remove the hard drive carrier.
4. Keep the Phillips #2 screwdriver ready.

Steps

1. Insert the hard drive into the hard drive carrier with the connector end of the hard drive toward the back of the hard drive carrier.
2. Align the screw holes on the hard drive with the screw holes on the hard drive carrier.
   When aligned correctly, the back of the hard drive is flush with the back of the hard drive carrier.
3. Install the screws to secure the hard drive to the hard drive carrier.

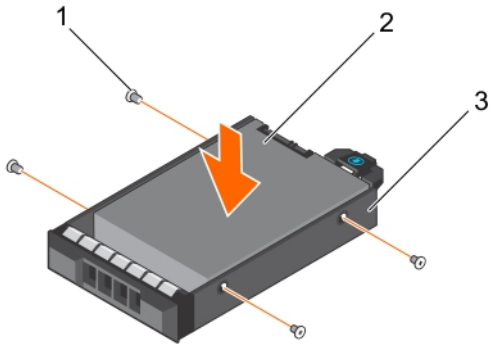

Figure 31. Installing a cabled hard drive to a cabled hard drive carrier

a. screw (4)
b. cabled hard drive
c. cabled hard drive carrier

Next steps

1. Install the cabled hard drive carrier.
2. Follow the procedure listed in After working inside your system.

Related tasks

Removing a 3.5-inch cabled hard drive carrier
Installing a 3.5-inch cabled hard drive carrier

Removing a hot swappable hard drive carrier

Prerequisites

CAUTION: Many repairs may only be done by a certified service technician. You should only perform troubleshooting and simple repairs as authorized in your product documentation, or as directed by the online or telephone service and support team. Damage due to servicing that is not authorized by Dell is not covered by your warranty. Read and follow the safety instructions that came with the product.

1. Follow the safety guidelines listed in the Safety instructions section.
2. If installed, remove the front bezel.
3. Using the management software, prepare the hard drive for removal. For more information, see the documentation for the storage controller.

   If the hard drive is online, the green activity or fault indicator flashes when the hard drive is turned off. You can remove the hard drive when the hard drive indicators turn off.

CAUTION: To prevent data loss, ensure that your operating system supports hot-swap drive installation. See the documentation supplied with your operating system.

NOTE: Hot swappable hard drives are supplied in hot swappable hard drive carriers that fit in the hard drive slots.

Steps

1. Press the release button to open the hard drive carrier release handle.
2. Slide the hard drive carrier out of the hard drive slot.

   CAUTION: To maintain proper system cooling, all empty hard drive slots must have hard drive carrier blanks installed.

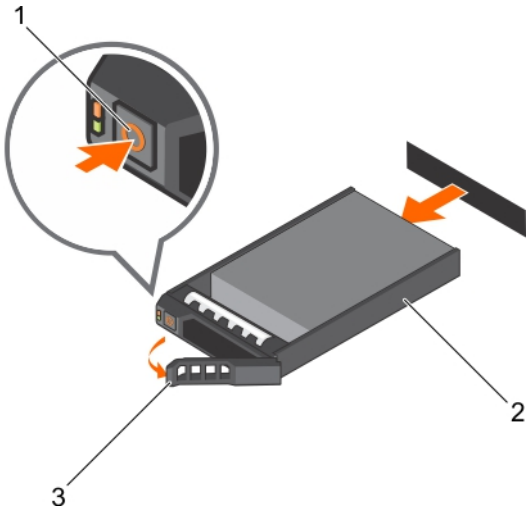

Figure 32. Removing a hot swappable hard drive or SSD

a. release button
b. hard drive carrier
c. hard drive carrier handle

Next steps

1. If you are not replacing the hard drive immediately, insert a hard drive carrier blank in the empty hard drive slot, or install a hard drive carrier.
2. If removed, install the front bezel.

Related tasks

Removing the optional front bezel
Installing a 2.5-inch hot swappable hard drive blank
Installing a 3.5-inch hot swappable hard drive carrier blank
Installing a hot swappable hard drive carrier

Installing a hot swappable hard drive carrier

Prerequisites

CAUTION: Many repairs may only be done by a certified service technician. You should only perform troubleshooting and simple repairs as authorized in your product documentation, or as directed by the online or telephone service and support team. Damage due to servicing that is not authorized by Dell is not covered by your warranty. Read and follow the safety instructions that are shipped with your product.

CAUTION: Use only hard drives that have been tested and approved for use with the hard drive backplane.

CAUTION: Combining SAS and SATA hard drives in the same RAID volume is not supported.

CAUTION: When installing a hard drive, ensure that the adjacent drives are fully installed. Inserting a hard drive carrier and attempting to lock its handle next to a partially installed carrier can damage the partially installed carrier's shield spring and make it unusable.

CAUTION: To prevent data loss, ensure that your operating system supports hot-swap drive installation. See the documentation supplied with your operating system.

CAUTION: When a replacement hot swappable hard drive is installed and the system is powered on, the hard drive automatically begins to rebuild. Make absolutely sure that the replacement hard drive is blank or contains data that you wish to have over-written. Any data on the replacement hard drive is immediately lost after the hard drive is installed.

NOTE: Hot swappable hard drives are supplied in hot swappable hard drive carriers that fit in the hard drive slots.

1. If installed, remove the front bezel.
2. If installed, remove the hard drive carrier blank.
3. Install a hot swappable hard drive into the hot swappable hard drive carrier.

Steps

1. Press the release button on the front of the hot swappable hard drive carrier and open the hot swappable hard drive carrier handle.
2. Insert the hot swappable hard drive carrier into the hard drive slot, and push the hot swappable hard drive carrier until it comes in contact with the backplane.
3. Close the hot swappable hard drive carrier handle to lock the hot swappable hard drive carrier in place.

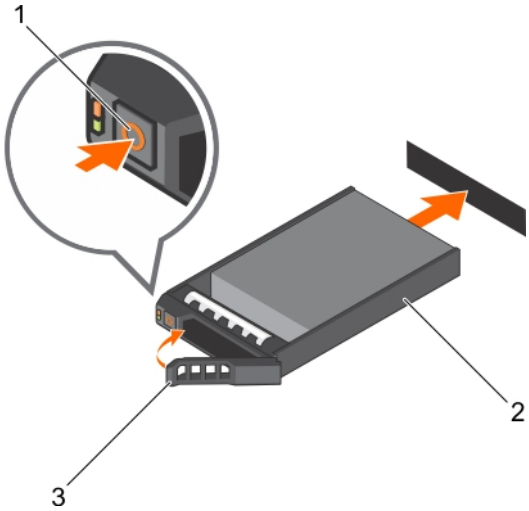

Figure 33. Installing a hot swappable hard drive carrier

a. release button
b. hard drive carrier
c. hard drive carrier handle

Next steps

If removed, install the front bezel.

Related tasks

Removing a 2.5-inch hard drive blank
Removing a 3.5-inch hot swappable hard drive carrier blank
Installing a hot swappable hard drive into a hot swappable hard drive carrier
Installing the optional front bezel

Removing the optional 1.8-inch solid state drives

Prerequisites

CAUTION: Many repairs may only be done by a certified service technician. You should only perform troubleshooting and simple repairs as authorized in your product documentation, or as directed by the online or telephone service and support team. Damage due to servicing that is not authorized by Dell is not covered by your warranty. Read and follow the safety instructions that are shipped with your product.

1. Ensure that you follow the Safety instructions.
2. Follow the procedure listed in Before working inside your system.

Steps

1. Disconnect the power and data cables from the back of the solid state drives (SSDs).
2. If required, disconnect the power and data cables from the system board.

   Observe the routing of the power and data cables inside the chassis as you remove them from the system board and the optical drive. You must route these cables properly when you replace them to prevent them from being pinched or crimped.
3. To release the SSD tray, press and push the tray release tab toward the front of the system.

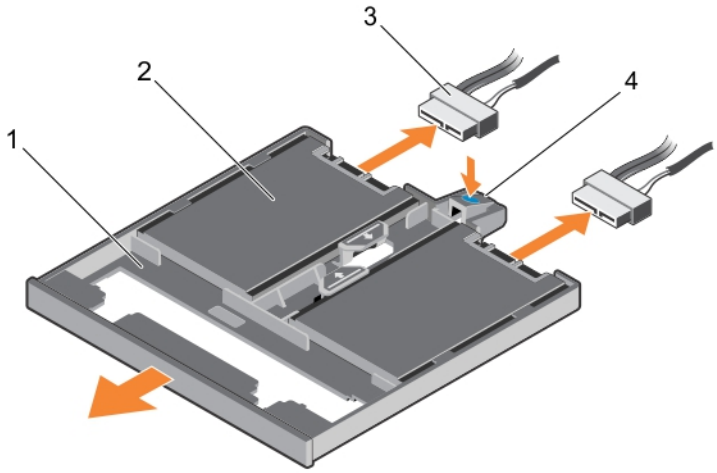

Figure 34. Removing the 1.8-inch SSD tray

1. SSD tray
2. SSD
3. data and power cable
4. tray release tab

4. Slide the SSD carrier out of the system until it is free of the optical-drive slot.
5. Press the SSD release tab and lift the SSD from the tray.

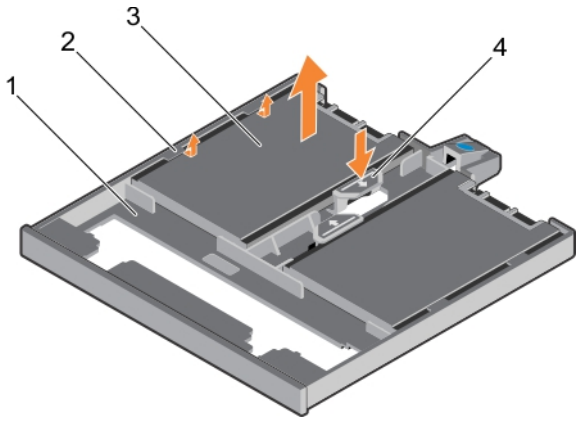

Figure 35. Removing the 1.8-inch solid state drives from the SSD tray

1. SSD tray
2. tabs on the tray
3. SSD
4. SSD release tab

Next steps

1. Depending on your system configuration, install an optical drive or two 1.8-inch solid state drives.
2. If you are not immediately installing an optical drive or 1.8-inch SSDs, install an optical drive blank.

   NOTE: Blanks must be installed on empty optical drive or tape drive slots to maintain FCC certification of the system. The brackets also keep dust and dirt out of the system and aid in proper cooling and airflow inside the system.
3. Follow the procedure listed in After working inside your system.

Related tasks

Installing the optional 1.8-inch solid state drives
Installing the optional optical drive

Installing the optional 1.8-inch solid state drives

Prerequisites

CAUTION: Many repairs may only be done by a certified service technician. You should only perform troubleshooting and simple repairs as authorized in your product documentation, or as directed by the online or telephone service and support team. Damage due to servicing that is not authorized by Dell is not covered by your warranty. Read and follow the safety instructions that are shipped with your product.

1. Ensure that you follow the Safety instructions.
2. Follow the procedure listed in Before working inside your system.
3. If installed, remove the optical drive blank or the solid state drives (SSDs) tray by pressing the blue release tab at the back of the blank or tray and pushing the blank or tray out of the system.

Steps

1. Align and insert the SSD into the SSD tray.
2. Press the SSD until it locks into place.

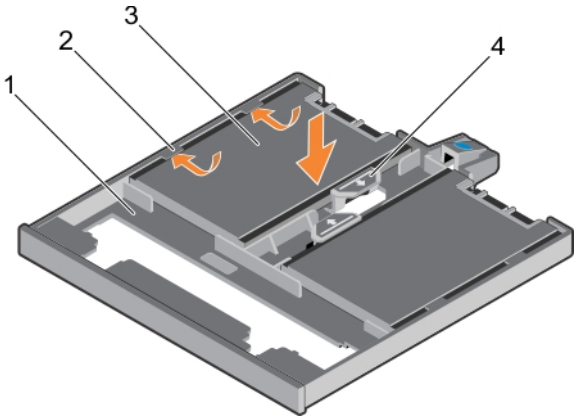

Figure 36. Installing the 1.8-inch solid state drives into the SSD tray

1. SSD tray
2. tabs on the tray
3. SSD
4. SSD release tab

3. Press the SSD release tab on the SSD tray, and slide the SSD under the tabs on the tray.
4. Press the SSD until it locks into place.
5. Align the SSD tray with the optical drive slot on the front of chassis.
6. Slide the SSD tray into the slot until the latch snaps into place.
7. Connect the power and data cable to the back of the SSD.
8. Route the power and data cable underneath the cable routing latch of the system.
9. Connect the power and data cable to the connectors on the system board.

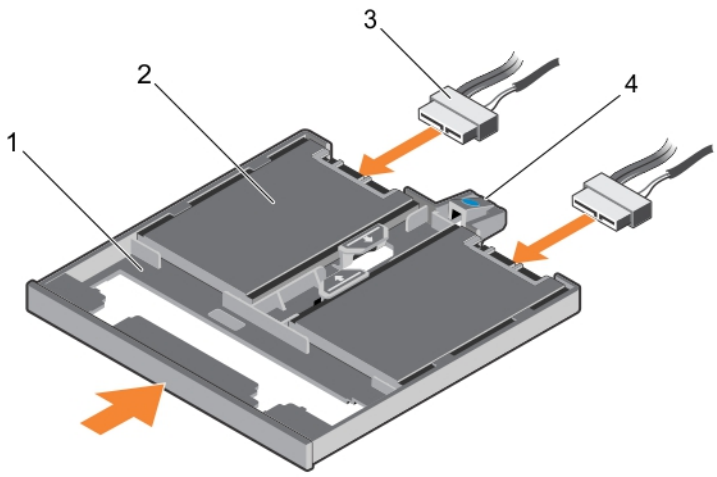

Figure 37. Installing the 1.8-inch SSD tray

1. SSD tray
2. SSD
3. data and power cable
4. tray release tab

Next steps

Follow the procedure listed in After working inside your system.

Related tasks

Removing the optional optical drive
Removing the optional 1.8-inch solid state drives

Removing a 2.5-inch hard drive from a 3.5-inch hard drive adapter

Prerequisites

CAUTION: Many repairs may only be done by a certified service technician. You should only perform troubleshooting and simple repairs as authorized in your product documentation, or as directed by the online or telephone service and support team. Damage due to servicing that is not authorized by Dell is not covered by your warranty. Read and follow the safety instructions that came with the product.

1. Follow the safety guidelines listed in the Safety instructions section.
2. Keep the Phillips #2 screwdriver ready.
3. Remove the 3.5-inch hard drive adapter from the 3.5-inch hot swappable hard drive carrier.

NOTE: A 2.5-inch hot swappable hard drive is installed in a 3.5-inch hard drive adapter, which is then installed in the 3.5-inch hot swappable hard drive carrier.

Steps

1. Remove the screws from the side of the 3.5-inch hard drive adapter.
2. Remove the hard drive from the 3.5-inch hard drive adapter.

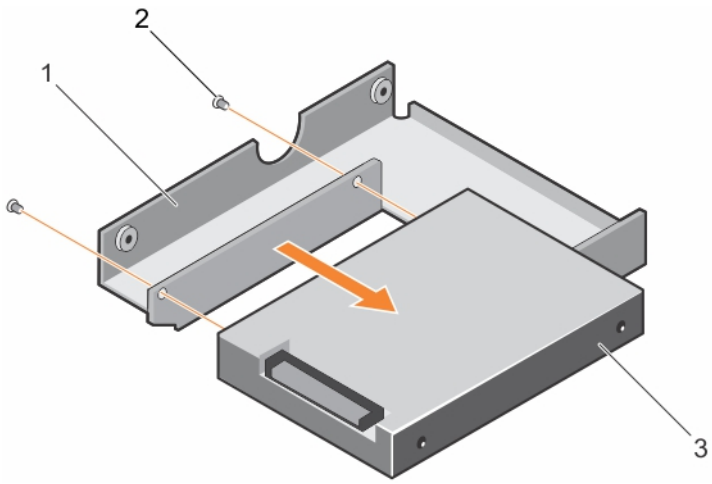

Figure 38. Removing a 2.5-inch hard drive from a 3.5-inch hard drive adapter

a. 3.5-inch hard drive adapter
b. screw (2)
c. 2.5-inch hard drive

Next steps

Install a 2.5-inch hard drive into a 3.5-inch hard drive adapter.

Installing a 2.5-inch hot swappable hard drive into a 3.5-inch hard drive adapter

Prerequisites

CAUTION: Many repairs may only be done by a certified service technician. You should only perform troubleshooting and simple repairs as authorized in your product documentation, or as directed by the online or telephone service and support team. Damage due to servicing that is not authorized by Dell is not covered by your warranty. Read and follow the safety instructions that are shipped with your product.

1. Follow the safety guidelines listed in the Safety instructions section.
2. Keep the Phillips #2 screwdriver ready.

Steps

1. Align the screw holes on the 2.5-inch hot swappable hard drive with the screw holes on the 3.5-inch hard drive adapter.
2. Install the screws to secure the 2.5-inch hot swappable hard drive to the 3.5-inch hard drive adapter.

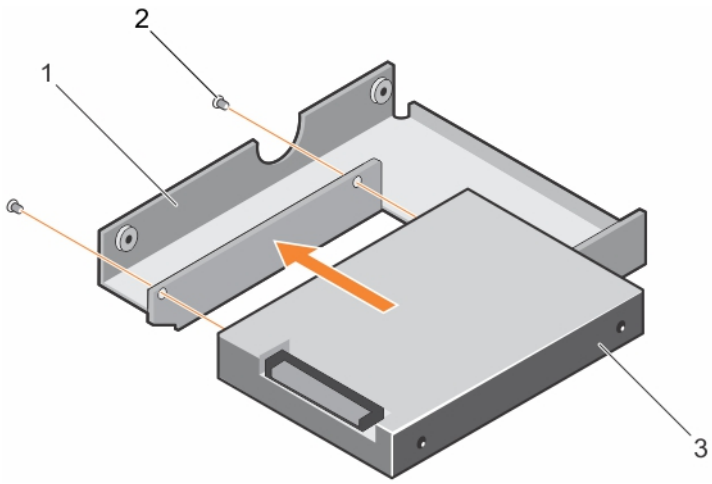

Figure 39. Installing a 2.5-inch hot swappable hard drive into a 3.5-inch hard drive adapter

a. 3.5-inch hard drive adapter
b. screw (2)
c. 2.5-inch hard drive

Next steps

Install the 3.5-inch adapter into the 3.5-inch hot swappable hard drive carrier.

Related tasks

Installing a 3.5-inch hard drive adapter into the 3.5-inch hot swappable hard drive carrier

Removing a 3.5-inch hard drive adapter from a 3.5-inch hot swappable hard drive carrier

Prerequisites

1. Follow the safety guidelines listed in the Safety instructions section.
2. Keep the Phillips #2 screwdriver ready.
3. Remove the 3.5-inch hot swappable hard drive carrier from the system.

Steps

1. Remove the screws from the rails on the 3.5-inch hot swappable hard drive carrier.
2. Lift the 3.5-inch hard drive adapter out of the 3.5-inch hot swappable hard drive carrier.

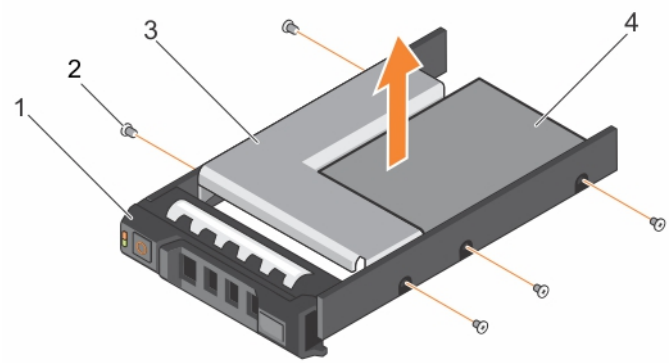

Figure 40. Removing a 3.5 inch hard drive adapter from a hard drive carrier.

1. 3.5-inch hot swappable hard drive carrier
2. screw (5)
3. 3.5-inch hard drive adapter
4. 2.5-inch hot swappable hard drive

Next steps

Remove the 2.5-inch hot swappable hard drive from a 3.5-inch hard drive adapter.

Related tasks

Removing a hot swappable hard drive carrier
Removing a 2.5-inch hot swappable hard drive from a 3.5-inch hard drive adapter

Installing a 3.5-inch hard drive adapter into the 3.5-inch hot swappable hard drive carrier

Prerequisites

CAUTION: Many repairs may only be done by a certified service technician. You should only perform troubleshooting and simple repairs as authorized in your product documentation, or as directed by the online or telephone service and support team. Damage due to servicing that is not authorized by Dell is not covered by your warranty. Read and follow the safety instructions that are shipped with your product.

1. Follow the safety guidelines listed in the Safety instructions section.
2. Keep the Phillips #2 screwdriver ready.
3. Install the 2.5-inch hot swappable hard drive into the 3.5-inch hard drive adapter.

Steps

1. Insert the 3.5-inch hard drive adapter into the 3.5-inch hot swappable hard drive carrier with the connector end of the hard drive toward the back of the 3.5-inch hot swappable hard drive carrier.
2. Align the screw holes on the 3.5-inch hard drive adapter and the 3.5-inch hard drive with the holes on the 3.5-inch hot swappable hard drive carrier.
3. Install the screws to secure the 3.5-inch hard drive adapter to the 3.5-inch hot swappable hard drive carrier.

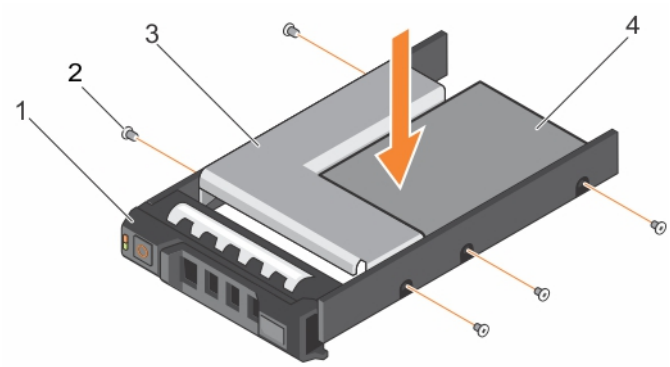

Figure 41. Installing a 3.5-inch hard drive adapter into a hot swappable hard drive carrier

1. 3.5-inch hot swappable hard drive carrier
2. screw (5)
3. hard drive adapter
4. 2.5-inch hard drive

Next steps

Install the 3.5-inch hot swappable hard drive carrier into the system.

Related tasks

Installing a 2.5-inch hot swappable hard drive into a 3.5-inch hard drive adapter
Installing a hot swappable hard drive carrier

Removing a hot swappable hard drive from a hard drive carrier

Prerequisites

CAUTION: Many repairs may only be done by a certified service technician. You should only perform troubleshooting and simple repairs as authorized in your product documentation, or as directed by the online or telephone service and support team. Damage due to servicing that is not authorized by Dell is not covered by your warranty. Read and follow the safety instructions that are shipped with your product.

NOTE: Hot swappable hard drives are supplied in hot swappable hard drive carriers that fit in the hard drive slots.

1. Keep the Phillips #2 screwdriver ready.
2. Remove the hard drive carrier from the system.

Steps

1. Remove the screws from the side rails on the hard drive carrier.
2. Lift the hard drive out of the hard drive carrier.

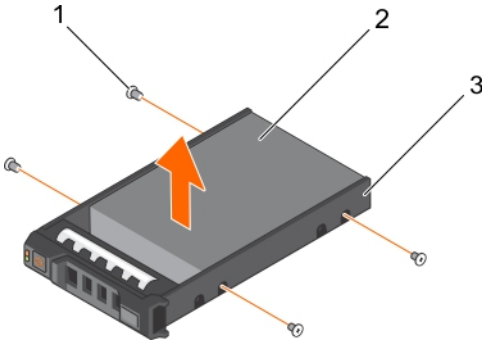

Figure 42. Removing a hot swappable hard drive from a hard drive carrier

a. screw (4)
b. hard drive
c. hard drive carrier

Next steps

1. Install the hot swappable hard drive into the hard drive carrier.
2. Install the hot swappable hard drive carrier into the system.

Related tasks

Removing a hot swappable hard drive carrier
Installing a hot swappable hard drive into a hot swappable hard drive carrier
Installing a hot swappable hard drive carrier

Installing a hot swappable hard drive into a hot swappable hard drive carrier

Prerequisites

CAUTION: Many repairs may only be done by a certified service technician. You should only perform troubleshooting and simple repairs as authorized in your product documentation, or as directed by the online or telephone service and support team. Damage due to servicing that is not authorized by Dell is not covered by your warranty. Read and follow the safety instructions that are shipped with your product.

NOTE: Hot swappable hard drives are supplied in hot swappable hard drive carriers that fit in the hard drive slots.

1. Keep the Phillips #2 screwdriver ready.
2. Remove the hot swappable hard drive carrier.

Steps

1. Insert the hot swappable hard drive into the hard drive carrier with the connector end of the hard drive toward the back.
2. Align the screw holes on the hard drive with the set of screw holes on the hard drive carrier.
   When aligned correctly, the back of the hard drive is flush with the back of the hard drive carrier.
3. Attach the screws to secure the hard drive to the hard drive carrier.

Next steps

Install the hard drive carrier into the system.

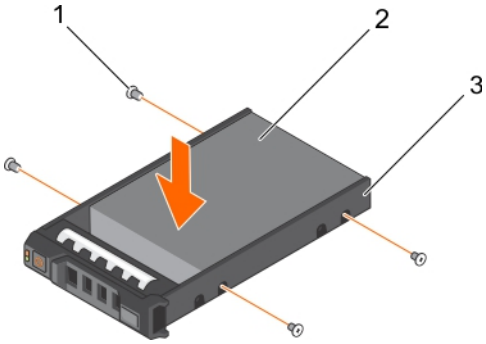

Figure 43. Installing a hot swappable hard drive into a hot swappable hard drive carrier

1. screw (4)
2. hard drive
3. hard drive carrier

Related tasks

Removing a hot swappable hard drive carrier
Installing a hot swappable hard drive carrier

Optical drive (optional)

Optical drives retrieve and store data on optical discs such as CD and DVD. Optical drives can be categorized into two basic types: optical disc readers and optical disc writers.

Removing the optional optical drive

The procedure for removing an optical drive and optical drive blank is the same.

Prerequisites

CAUTION: Many repairs may only be done by a certified service technician. You should only perform troubleshooting and simple repairs as authorized in your product documentation, or as directed by the online or telephone service and support team. Damage due to servicing that is not authorized by Dell is not covered by your warranty. Read and follow the safety instructions that are shipped with your product.

1. Follow the safety guidelines listed in the Safety instructions section.
2. Follow the procedure listed in the Before working inside your system section.

NOTE: Observe the routing of the power and data cables inside the chassis as you remove them from the system board and the optical drive. Route these cables in the same way when you replace them to prevent them from being pinched or crimped.

Steps

1. Disconnect the power and data cables from the back of the optical drive.
2. If required, disconnect the power and data cables from the system board.
3. To release the optical drive, press and push the release tab toward the front of the system.
4. Slide the optical drive out of the system.

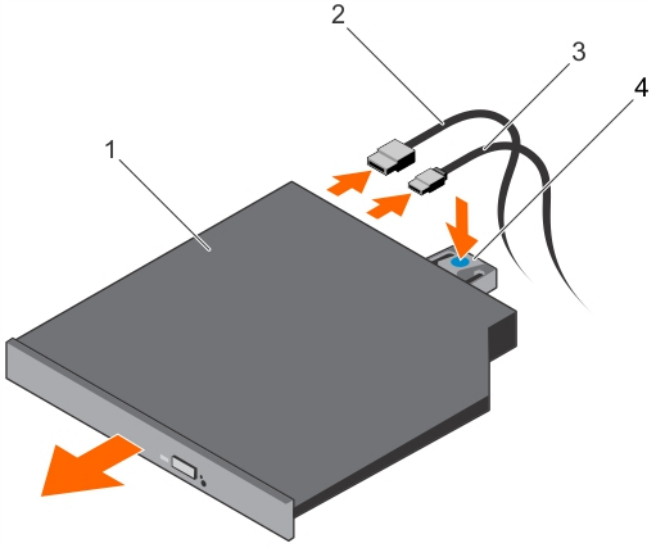

Figure 44. Removing the optical drive

1. optical drive
2. data cable
3. power cable
4. release tab

Next steps

1. Depending on your system configuration, install an optical drive or two 1.8-inch solid state drives (SSDs).
2. If you are not immediately installing an optical drive or 1.8-inch SSDs, install an optical drive blank.

   NOTE: Blanks must be installed on empty optical drive or tape drive slots to maintain FCC certification of the system. The brackets also keep dust and dirt out of the system and aid in proper cooling and airflow inside the system.
3. Follow the procedure listed in the After working inside your system section.

Related tasks

Installing the optional optical drive

Installing the optional 1.8-inch solid state drives

Related reference

Supported hard drive configurations

Installing the optional optical drive

The procedure for installing an optical drive and optical drive blank is similar to the procedure to install an optical drive.

Prerequisites

CAUTION: Many repairs may only be done by a certified service technician. You should only perform troubleshooting and simple repairs as authorized in your product documentation, or as directed by the online or telephone service and support team. Damage due to servicing that is not authorized by Dell is not covered by your warranty. Read and follow the safety instructions that are shipped with your product.

1. Follow the safety guidelines listed in the Safety instructions section.
2. Follow the procedure listed in the Before working inside your system section.

3. If installed, remove the optical drive blank by pressing the blue release tab at the back of the blank and pushing the blank out of the system.

Steps

1. Align the optical drive with the optical drive slot on the front of the chassis.
2. Slide the optical drive into the slot until the latch snaps into place.
3. Connect the power and data cables to the back of the optical drive.
4. Route the power and data cables through the cable routing latch of the system.
5. Connect the power and data cables to the connectors on the system board.

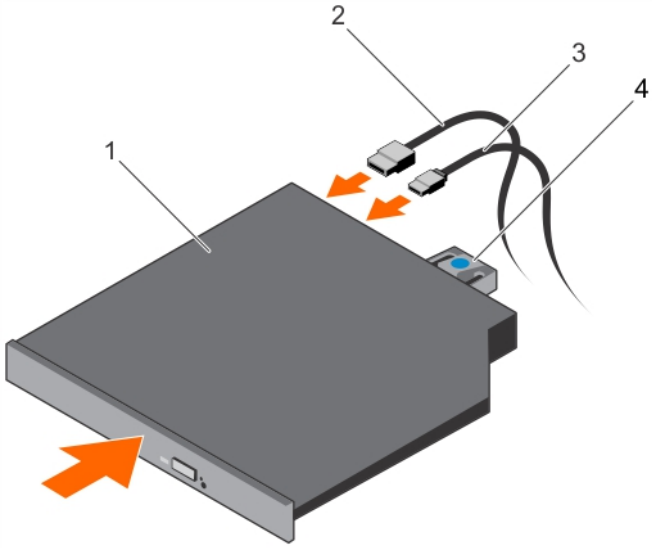

Figure 45. Installing the optical drive

1. optical drive
2. data cable
3. power cable
4. release tab

Next steps

Follow the procedure listed in the After working inside your system section.

Cooling fans

Depending on your system configuration, your system can support up to four cooling fans.

NOTE: Hot swappable removal or installation of the fans is not supported.

NOTE: Each fan is listed in the management software of the system, referenced by the respective fan number. If there is a problem with a particular fan, you can easily identify and replace the proper fan by noting down the fan numbers provided on the cooling fans.

The following table shows the number of fans required for different system configurations:

Table 22. Number of fans based on system configuration

System configuration	Number of fans
Systems with four 3.5-inch hard drives or four 2.5-inch hard drives with adapter	3
Systems with four 3.5-inch hard drives or four 2.5-inch hard drives with adapter with PCIe riser card	4
Systems with eight 2.5-inch hard drives	4

NOTE: Ensure that you install a cooling fan blank in an empty cooling fan bracket.

Removing the cooling fan blank

Prerequisites

CAUTION: Many repairs may only be done by a certified service technician. You should only perform troubleshooting and simple repairs as authorized in your product documentation, or as directed by the online or telephone service and support team. Damage due to servicing that is not authorized by Dell is not covered by your warranty. Read and follow the safety instructions that are shipped with your product.

NOTE: The procedure for removing each cooling fan blank is identical.

1. Follow the safety guidelines listed in Safety instructions section.
2. Follow the procedure listed in the Before working inside your system section.

Steps

1. Press the release tabs and push the cooling fan blank to disengage it from the cooling fan bracket.
2. Lift the cooling fan blank out of the cooling fan bracket.

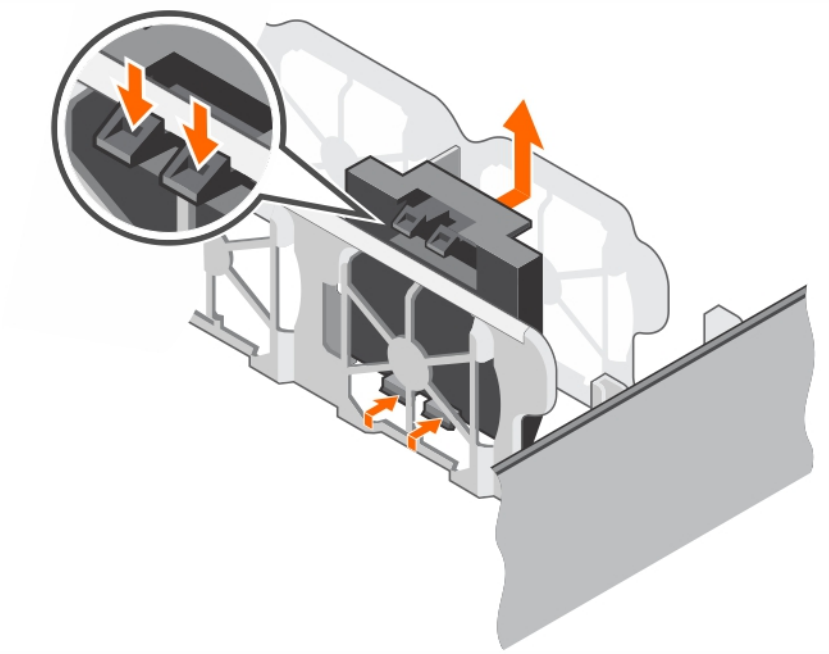

Figure 46. Removing a cooling fan blank

1. cooling fan blank (2)
2. cooling fan bracket
3. tab
4. release tab (2)

Next steps

1. Install the cooling fan.
2. Follow the procedure listed in the After working inside your system section.

Related tasks

Installing a cooling fan
Installing the cooling fan blank

Installing the cooling fan blank

Prerequisites

CAUTION: Many repairs may only be done by a certified service technician. You should only perform troubleshooting and simple repairs as authorized in your product documentation, or as directed by the online or telephone service and support team. Damage due to servicing that is not authorized by Dell is not covered by your warranty. Read and follow the safety instructions that are shipped with your product.

NOTE: The procedure for removing each cooling fan blank is identical.

1. Follow the safety guidelines listed in Safety instructions section.
2. Follow the procedure listed in the Before working inside your system section.

Steps

1. Lower the cooling fan blank into the cooling fan bracket.
2. Insert the tabs on the cooling fan blanks into the slots on the cooling fan bracket.
3. Press the cooling fan blank until it clicks into place.

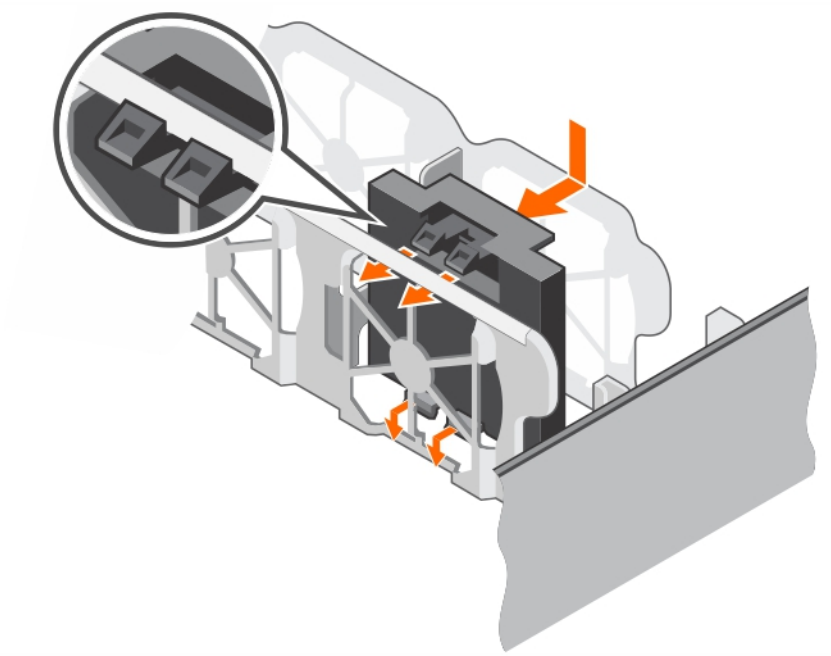

Figure 47. Installing a cooling fan blank

Next steps

Follow the procedure listed in the After working inside your system section.

Removing a cooling fan

Prerequisites

CAUTION: Many repairs may only be done by a certified service technician. You should only perform troubleshooting and simple repairs as authorized in your product documentation, or as directed by the online or telephone service and support team. Damage due to servicing that is not authorized by Dell is not covered by your warranty. Read and follow the safety instructions that are shipped with your product.

NOTE: The procedure for removing each fan is identical.

1. Follow the safety guidelines listed in the Safety instructions section.
2. Follow the procedure listed in the Before working inside your system section.
3. If required, remove the cooling shroud.

Steps

1. Disconnect the power cable from the power connector on the system board by pressing the sides of the power cable.
2. Lift the fan out of the cooling fan bracket.

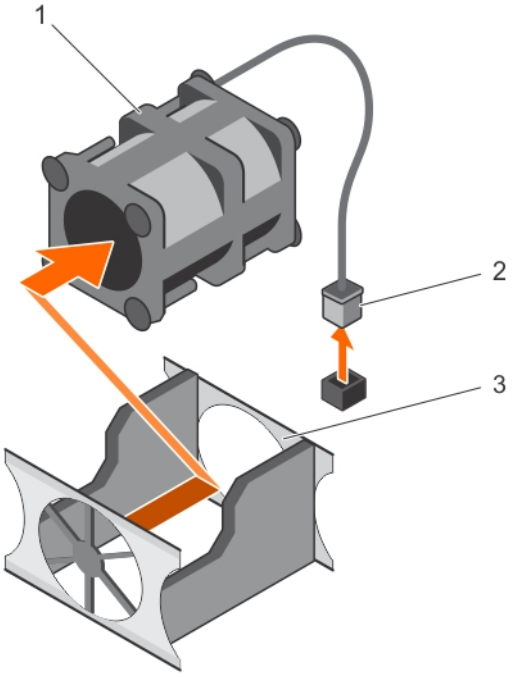

Figure 48. Removing a cooling fan

a. cooling fan
b. power cable connector
c. cooling fan bracket

Next steps

1. Install the cooling fan.
2. Follow the procedure listed in the After working inside your system section.

Related tasks

Removing the cooling shroud
Installing a cooling fan

Installing a cooling fan

Prerequisites

CAUTION: Many repairs may only be done by a certified service technician. You should only perform troubleshooting and simple repairs as authorized in your product documentation, or as directed by the online or telephone service and support team. Damage due to servicing that is not authorized by Dell is not covered by your warranty. Read and follow the safety instructions that are shipped with your product.

NOTE: The procedure for installing each fan is identical.

1. Follow the safety guidelines listed in the Safety instructions section.
2. Follow the procedure listed in the Before working inside your system section.

3. If installed, remove the cooling fan blank.
4. If required, remove the cooling shroud.

Steps

1. Lower the fan into the cooling fan bracket.
2. Connect the power cable to the power cable connector on the system board.

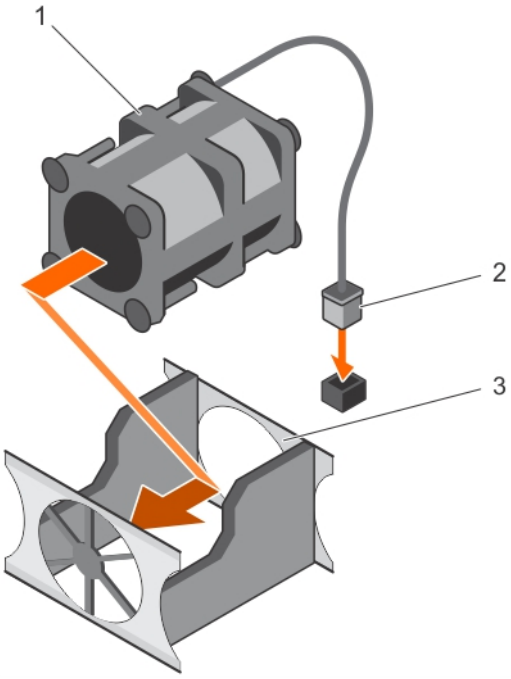

Figure 49. Installing a cooling fan

a. cooling fan
b. power cable connector
c. cooling fan bracket

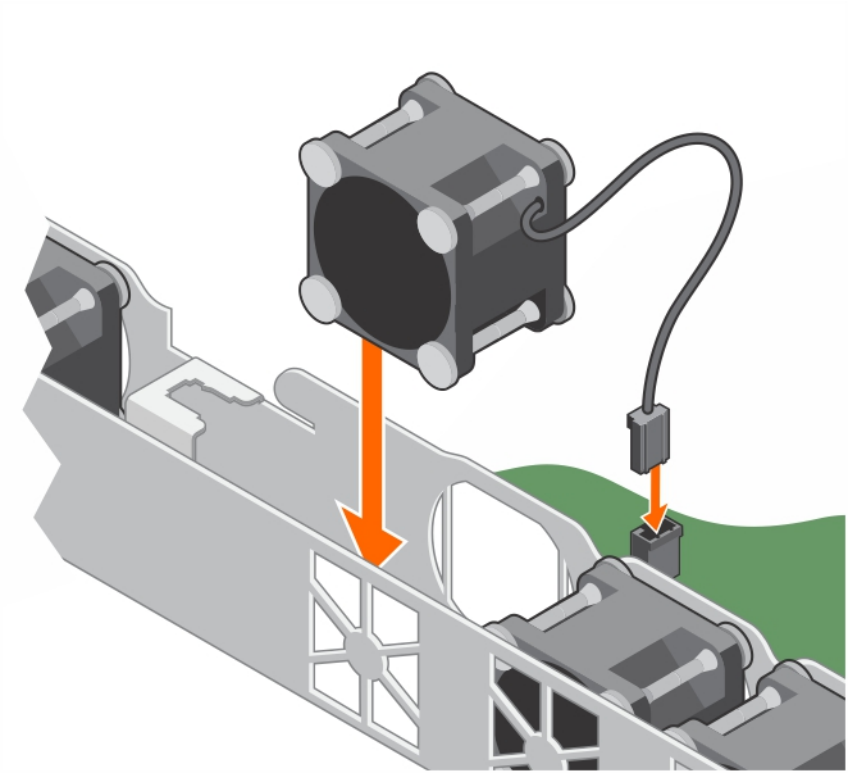

Figure 50. Installing a cooling fan

Next steps

1. Install the cooling shroud.
2. Follow the procedure listed in the After working inside your system section.

Related tasks

Removing the cooling fan blank
Removing the cooling shroud
Installing the cooling shroud

Internal USB memory key (optional)

The USB memory key installed inside your system can be used as a boot device, security key, or mass storage device.

To boot from the USB memory key, configure the USB memory key with a boot image and then specify the USB memory key in the boot sequence in System Setup.

The internal USB connector is located on the system board.

Related reference

System board connectors

Replacing the optional internal USB memory key

Prerequisites

CAUTION: Many repairs may only be done by a certified service technician. You should only perform troubleshooting and simple repairs as authorized in your product documentation, or as directed by the online or telephone service and support team. Damage due to servicing that is not authorized by Dell is not covered by your warranty. Read and follow the safety instructions that are shipped with your product.

1. Follow the safety guidelines listed in the Safety instructions section.
2. Follow the procedure listed in the Before working inside your system section.
3. Remove the expansion card riser.

Steps

1. Locate the USB port or USB memory key on the system board.
   To locate the USB port, see the System board jumpers and connectors section.
2. If installed, remove the USB memory key from the USB port.

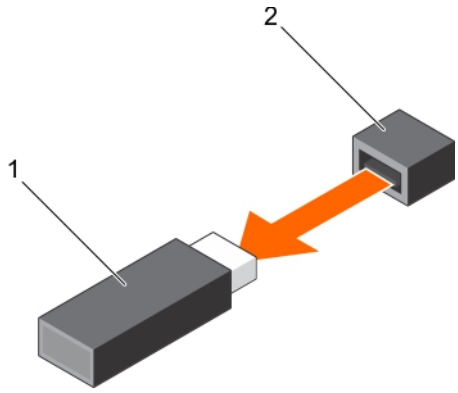

Figure 51. Removing the internal USB memory key

   a. USB memory key
   b. USB port
3. Insert the replacement USB memory key into the USB port.

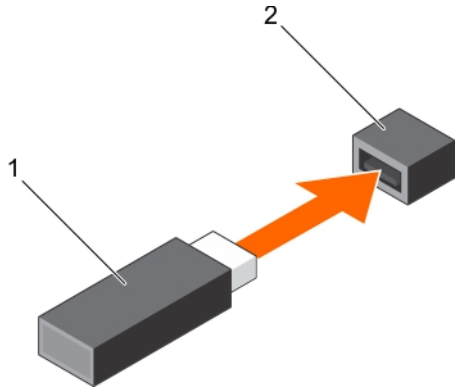

Figure 52. Installing the internal USB memory key

   a. USB memory key
   b. USB port

Next steps

1. Install the expansion card riser.
2. Follow the procedure listed in the After working inside your system section.
3. While booting, press F2 to enter System Setup and verify that the system detects the USB memory key.

Related tasks

Removing the expansion card riser
Installing the expansion card riser

Expansion cards and expansion card riser

An expansion card in the system is an add-on card that can be inserted into an expansion slot on the system board or riser card to add enhanced functionality to the system through the expansion bus.

NOTE: A System Event Log (SEL) event is logged if an expansion card riser is unsupported or missing. It does not prevent your system from turning on and no BIOS POST message or F1/F2 pause is displayed.

NOTE: The expansion card riser is optional for systems with four hard drives.

Expansion card installation guidelines

Your system supports PCIe Express Generation 3 cards. The following table provides riser configurations for R330 systems:

Table 23. Expansion card slots available on the expansion card riser

PCIe slot on the expansion card riser	Height	Length	Link width	Slot width
LP SLOT 1	Half Height	Half Length	x4	x8
FH SLOT 2	Full Height	Half Length	x8	x16

Table 24. Expansion card slots available on the system board

PCIe slot on the system board	Height	Length	Link width	Slot width
PCIE_G3_X4	Half Height	Half Length	x4	x8

NOTE: The expansion cards are not hot-swappable.

The following table provides a guide for installing expansion cards to ensure proper cooling and mechanical fit. The expansion cards with the highest priority must be installed first using the slot priority indicated. All other expansion cards must be installed in card priority and slot priority order.

Table 25. Expansion card installation order

Card priority	Card type		Slot priority	Maximum allowed
1	RAID	PowerEdge RAID Controller (PERC) H730 and H330	Internal PERC slot	1
		PERC H830 Full Height	2	1
		PERC H830 Low Profile	1	1
2	10 Gb NICs	Intel and Broadcom Dual Port	2	1
		Intel and Broadcom Dual Port Low Profile	1	1
3	FC8 HBA	Qlogic QLE2562, Qlogic QLE2560, Emulex LPE12002, Emulex LPE12000, Emulex LPE15000, and Emulex LPE15002	2	1
		Qlogic QLE2562, Qlogic QLE2560, Emulex LPE12002, Emulex LPE12000, Emulex LPE15000,	1	1

Card priority	Card type		Slot priority	Maximum allowed
		and Emulex LPE15002 Low Profile		
4	1 Gb NICs	Intel and Broadcom Dual and Quad Port	2	1
		Intel and Broadcom Dual and Quad Port Low Profile	1	1
5	Non-RAID	12GB SAS HBA Full Height	2	1
		12GB SAS HBA Low Profile	1	1

Removing the expansion card riser

Prerequisites

CAUTION: Many repairs may only be done by a certified service technician. You should only perform troubleshooting and simple repairs as authorized in your product documentation, or as directed by the online or telephone service and support team. Damage due to servicing that is not authorized by Dell is not covered by your warranty. Read and follow the safety instructions that are shipped with your product.

1. Follow the safety guidelines listed in Safety instructions section.
2. Follow the procedure listed in the Before working inside your system section.

Steps

1. Lift and rotate the expansion card riser latch to open it.
2. Holding the touch points, lift the expansion card riser from the riser connector on the system board.

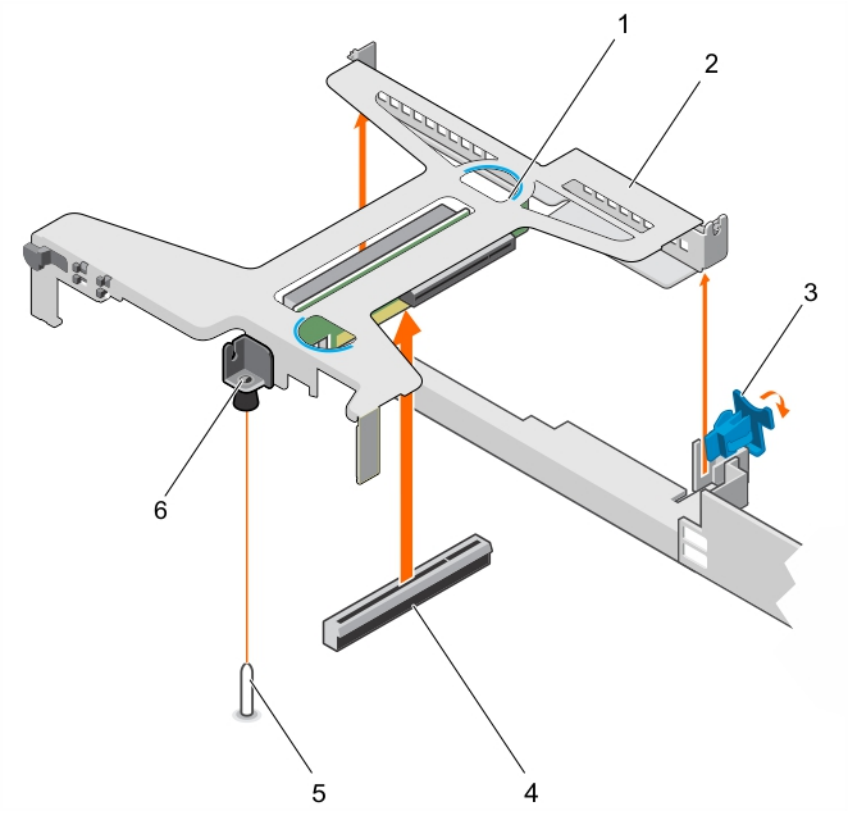

Figure 53. Removing and installing the expansion card riser

1. expansion card riser
2. touch point (2)
3. expansion card latch
4. guide slot on the chassis
5. riser connector on the system board
6. guide pin on the system board
7. guide slot on the expansion card riser

Next steps

1. Install the expansion card riser.
2. Follow the procedure listed in the After working inside your system section.

Related tasks

Installing the expansion card riser

Installing the expansion card riser

Prerequisites

CAUTION: Many repairs may only be done by a certified service technician. You should only perform troubleshooting and simple repairs as authorized in your product documentation, or as directed by the online or telephone service and support team. Damage due to servicing that is not authorized by Dell is not covered by your warranty. Read and follow the safety instructions that are shipped with your product.

1. Follow the safety guidelines listed in the Safety instructions section.
2. Follow the procedure listed in the Before working inside your system section.
3. Install the expansion card into the expansion card riser.

Steps

1. Open the expansion card riser latch.
2. Align the following:

a) Guide on the expansion card riser with the guide pin on the system board.
b) Expansion card riser connector with the connector on the system board.

3. Lower the expansion card riser until the expansion card riser is firmly seated in the connector on the system board.
4. Close the expansion card riser latch.

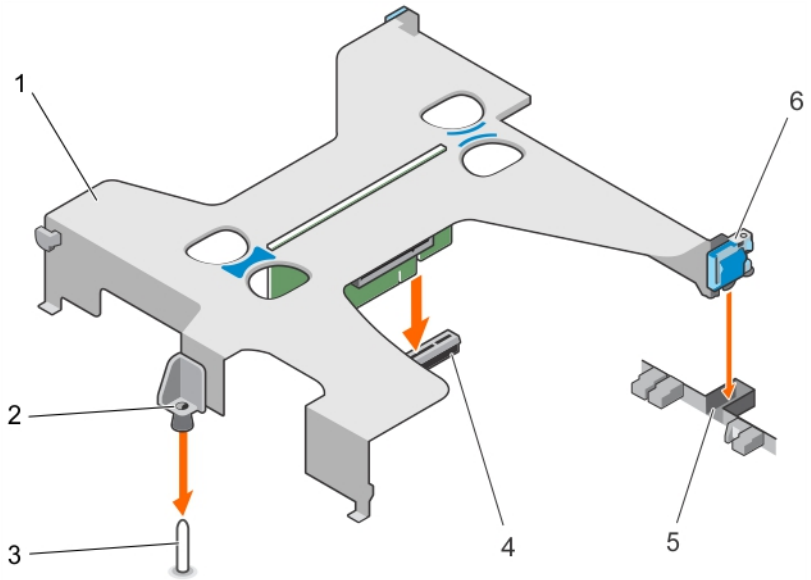

Figure 54. Installing the expansion card riser

1. expansion card riser
2. guide on the expansion card riser
3. guide pin on the system board
4. riser connector on the system board
5. slot on the chassis
6. expansion card latch

Next steps

Follow the procedure listed in the After working inside your system section.

Related tasks

Installing an expansion card

Removing an expansion card

Prerequisites

CAUTION: Many repairs may only be done by a certified service technician. You should only perform troubleshooting and simple repairs as authorized in your product documentation, or as directed by the online or telephone service and support team. Damage due to servicing that is not authorized by Dell is not covered by your warranty. Read and follow the safety instructions that are shipped with your product.

1. Follow the safety guidelines listed in the Safety instructions section.
2. Follow the procedure listed in the Before working inside your system section.
3. Disconnect any cables connected to the expansion card or expansion card riser.
4. If installed, remove the expansion card riser.

Steps

1. Hold the expansion card by its edges and remove it from the expansion card riser connector.
2. If you are removing the card permanently, install a filler bracket in the empty expansion card slot and close the expansion card latch.

   NOTE: You must install a filler bracket over an empty expansion card slot to maintain Federal Communications Commission (FCC) certification of the system. The brackets also keep dust and dirt out of the system and aid in proper cooling and airflow inside the system.

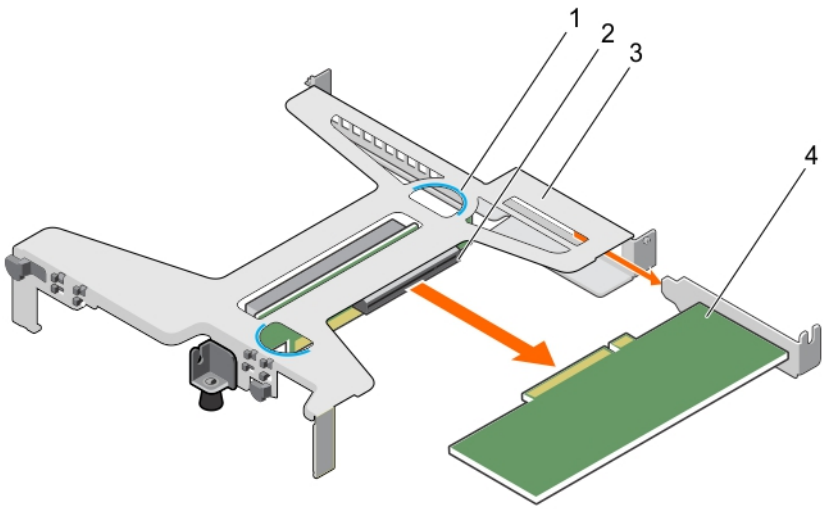

Figure 55. Removing the expansion card from the expansion card riser

1. touch point (2)
2. expansion card riser connector
3. expansion card riser
4. expansion card

Next steps

1. Install the filler bracket or expansion card, if applicable.
2. Install the expansion card riser
3. Follow the procedure listed in the After working inside your system section.

Related tasks

Installing an expansion card
Removing the expansion card riser
Installing the expansion card riser

Installing an expansion card

Prerequisites

CAUTION: Many repairs may only be done by a certified service technician. You should only perform troubleshooting and simple repairs as authorized in your product documentation, or as directed by the online or telephone service and support team. Damage due to servicing that is not authorized by Dell is not covered by your warranty. Read and follow the safety instructions that are shipped with your product.

1. Follow the safety guidelines listed in the Safety instructions section.
2. Follow the procedure listed in the Before working inside your system section.
3. Remove the expansion card riser.
4. If installed, remove the filler bracket.

Steps

1. Locate the expansion card connector on the riser.
2. Holding the expansion card by its edges, position the card so that the card connector aligns with the connector on the expansion card riser.
3. Insert the card connector into the expansion card riser connector until the card is firmly seated.
4. If required, connect the cables to the expansion card.

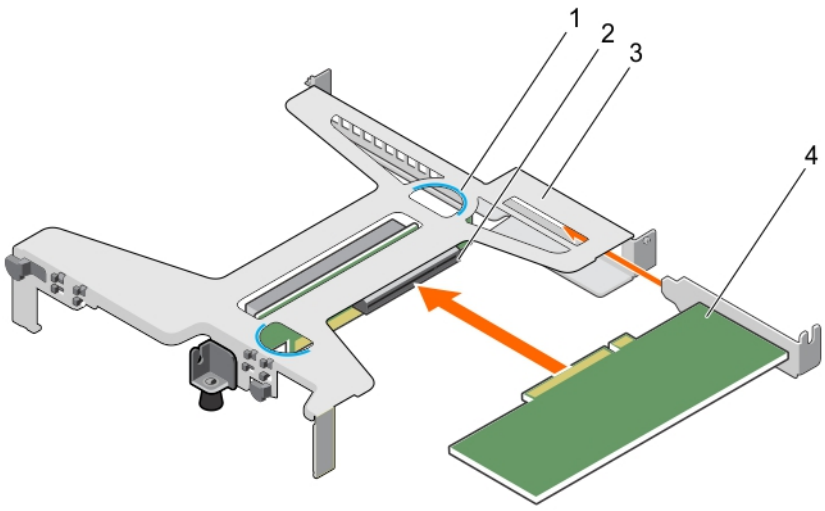

Figure 56. Installing the expansion card in the expansion card riser

1. touch point (2)
2. expansion card riser connector
3. expansion card riser
4. expansion card

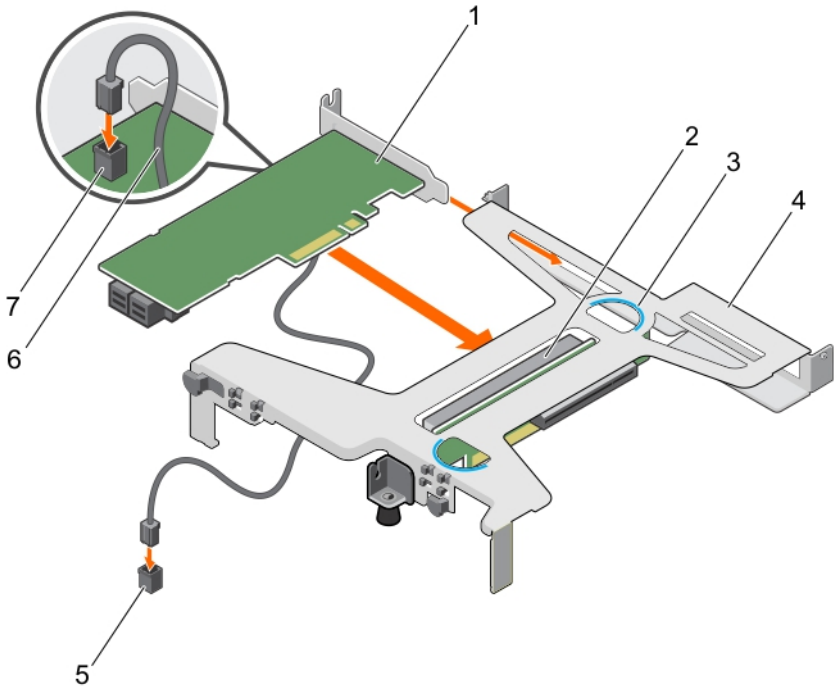

Figure 57. Installing the expansion card in the expansion card riser

1. PERC card
2. expansion card connector on the riser
3. touch point (2)
4. expansion card riser
5. LED connector on the system board
6. LED cable
7. LED connector on the PERC card

Next steps

1. Install the expansion card riser.
2. Follow the procedure listed in the After working inside your system section.

Related tasks

Removing the expansion card riser
Installing the expansion card riser

Removing the internal PERC card

Prerequisites

CAUTION: Many repairs may only be done by a certified service technician. You should only perform troubleshooting and simple repairs as authorized in your product documentation, or as directed by the online or telephone service and support team. Damage due to servicing that is not authorized by Dell is not covered by your warranty. Read and follow the safety instructions that are shipped with your product.

1. Follow the safety guidelines listed in Safety instructions section.
2. Follow the procedure listed in the Before working inside your system section.
3. Remove the expansion card riser.
4. Keep the Phillips #2 screwdriver ready.

Steps

1. Remove the screw from the PERC card lock.
2. Turn the PERC card lock to disengage the lock from the PERC card.
3. Push the PERC card lock until the tab on the PERC card lock clicks into the slot on the chassis.

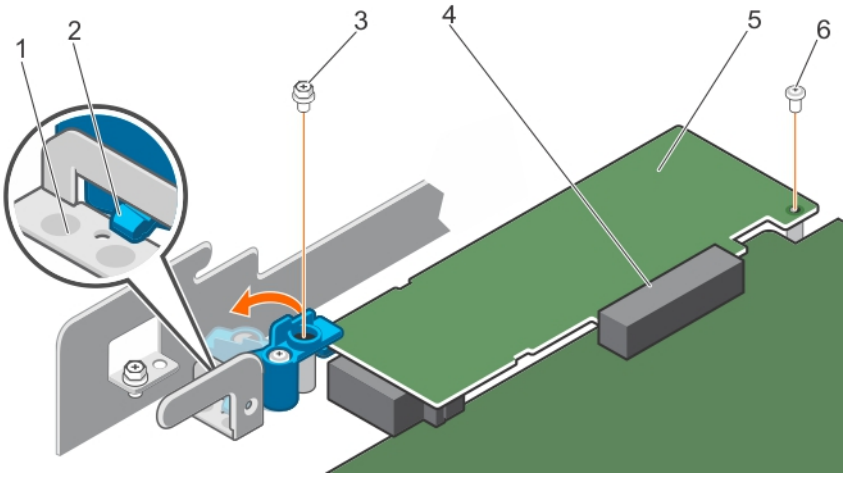

Figure 58. Opening the PERC card lock

1. slot on the chassis
2. tab on the PERC card lock
3. PERC card lock
4. screw on the PERC card lock
5. PERC card
6. PERC card slot
7. screw securing the PERC card to the chassis

4. Remove the screw that secures the PERC card to the chassis.
5. Disconnect the PERC card LED cable from the system board.
6. Hold the PERC card by the edges and pull the PERC card to disengage it from the PERC card slot.
7. Lift the PERC card away from the chassis.

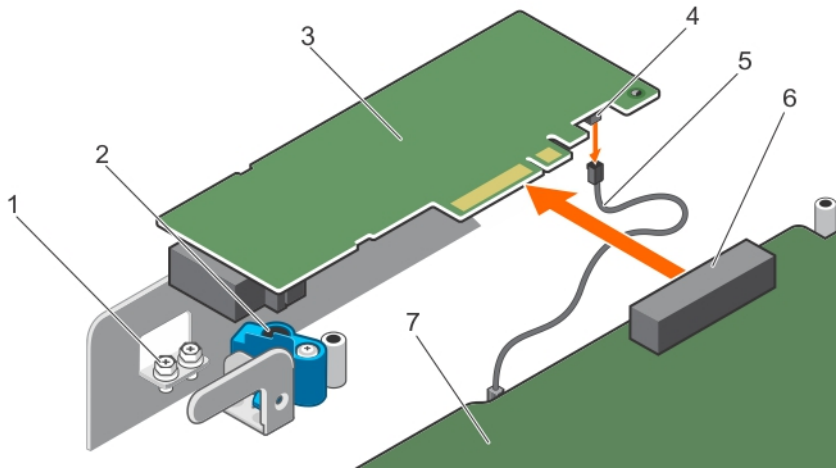

Figure 59. Removing the internal PERC card

1. screw (2)
2. PERC card lock
3. PERC card
4. LED cable connector on the PERC card
5. PERC card LED cable
6. PERC card connector
7. LED cable connector on the system board

Next steps

1. Install the internal PERC card.
2. Install the expansion card riser.
3. Follow the procedure listed in the After working inside your system section.

Related tasks

Removing the expansion card riser
Installing the expansion card riser
Installing the internal PERC card

Installing the internal PERC card

Prerequisites

1. Follow the safety guidelines listed in Safety instructions section.
2. Follow the procedure listed in the Before working inside your system section.
3. Remove the expansion card riser.
4. Keep the Phillips #2 screwdriver ready.

Steps

1. Connect the PERC LED cable to the LED cable connector on the PERC card.
2. Insert the PERC card in the PERC card slot.
3. Press and slide the tab on the PERC card lock to disengage it from the slot on the chassis.
4. Turn the internal PERC card lock to engage it with the PERC card.
5. Install the first screw to secure the PERC card lock to the PERC card.
6. Install the second screw to secure the PERC card to the chassis.

   NOTE: Use the two screws supplied with the system to secure the PERC card to the PERC card lock and the chassis

7. Connect the PERC LED cable to the LED cable connector on the system board.

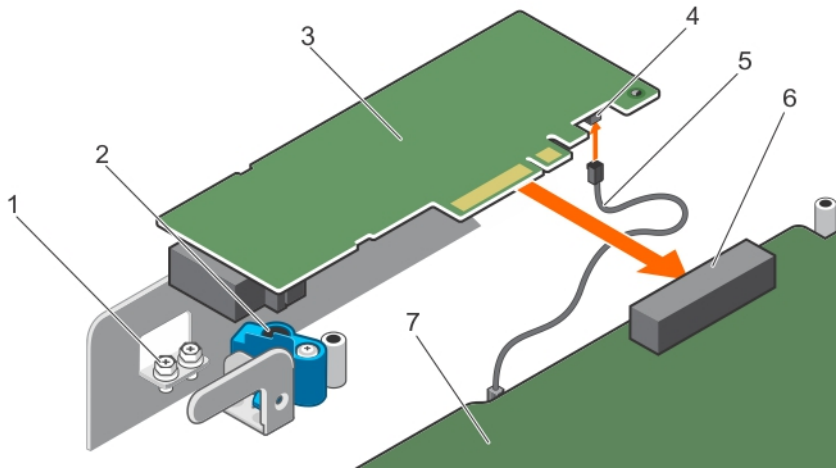

Figure 60. Installing the internal PERC card

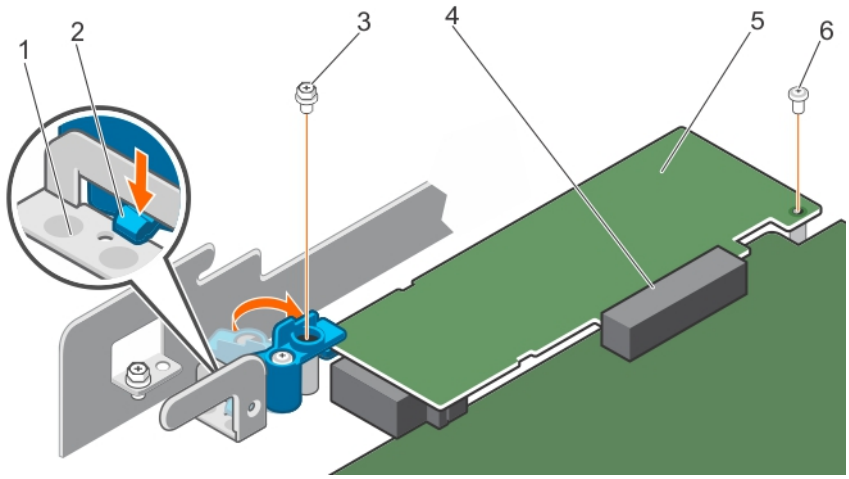

Figure 61. Closing the PERC card lock

Next steps

1. Install the expansion card riser.
2. Follow the procedure listed in the After working inside your system section.

Related tasks

Removing the expansion card riser

Installing the expansion card riser

SD vFlash card (optional)

An SD vFlash card is a Secure Digital (SD) card that plugs into the SD vFlash card slot in the iDRAC port card. It provides persistent on-demand local storage and a custom deployment environment that enables automation of server configuration, scripts, and imaging. It emulates USB device(s). For more information, see the Integrated Dell Remote Access Controller User's Guide at **Dell.com/idracmanuals**.

Removing the optional SD vFlash card

Prerequisites

1. Follow the safety guidelines listed in the Safety instructions section.

2. Locate the SD vFlash card slot at the back of the chassis.

Steps

To remove the SD vFlash card, push the SD vFlash card inward to release it, and pull the SD vFlash card from the SD vFlash card slot.

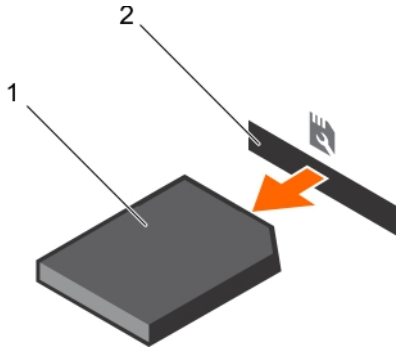

Figure 62. Removing the optional SD vFlash card

a. SD vFlash card
b. SD vFlash card slot

Installing an optional SD vFlash card

Prerequisites

1. Follow the safety guidelines listed in the Safety instructions section.
2. Locate the SD vFlash card slot at the back of the chassis.

Steps

1. Install a the SD vFlash card by inserting the contact-pin end of the SD vFlash card into the SD vFlash card slot on the module.

   NOTE: The slot is keyed to ensure correct insertion of the SD vFlash card.

2. Press the SD vFlash card inward to lock it into the SD vFlash card slot.

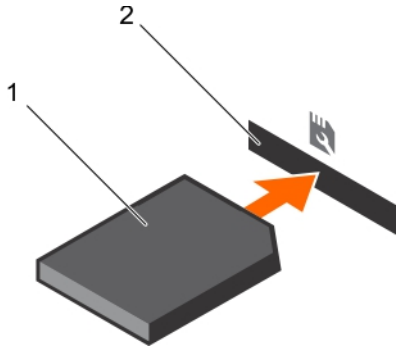

Figure 63. Installing an optional SD vFlash card

iDRAC port card (optional)

The iDRAC port card consists of a SD vFlash card slot and an iDRAC port. The iDRAC port card is used for advanced management of the system. An SD vFlash card is a Secure Digital (SD) card that plugs into the SD vFlash card slot in the system. It provides persistent on-demand local storage and a custom deployment environment that allows automation of server configuration, scripts, and imaging. It emulates USB device(s). For more information, see the Integrated Dell Remote Access Controller User's Guide at **Dell.com/esmmanuals**.

The iDRAC port card consists of the SD vFlash card slot and an iDRAC port. The iDRAC port card features a dedicated NIC port and is used for remote, advanced management of the system through the network.

An SD vFlash card is a Secure Digital (SD) card that plugs into the SD vFlash card slot in the iDRAC port card. It provides persistent on-demand local storage and a custom deployment environment that enables automation of server configuration, scripts, and imaging. It emulates a USB device. For more information, see the Integrated Dell Remote Access Controller User's Guide at **Dell.com/idracmanuals**.

Removing the optional iDRAC port card

Prerequisites

CAUTION: Many repairs may only be done by a certified service technician. You should only perform troubleshooting and simple repairs as authorized in your product documentation, or as directed by the online or telephone service and support team. Damage due to servicing that is not authorized by Dell is not covered by your warranty. Read and follow the safety instructions that are shipped with your product.

1. Follow the safety guidelines listed in the Safety instructions section.
2. Follow the procedure listed in the Before working inside your system section.
3. Keep the Phillips #2 screwdriver ready.
4. If connected, disconnect the network cable from the iDRAC port card.
5. Remove the cooling shroud.

Steps

1. Loosen the screw securing the iDRAC port card holder to the system board.
2. Pull the iDRAC port card to disengage it from the iDRAC port card connector on the system board, and remove the card from the chassis.

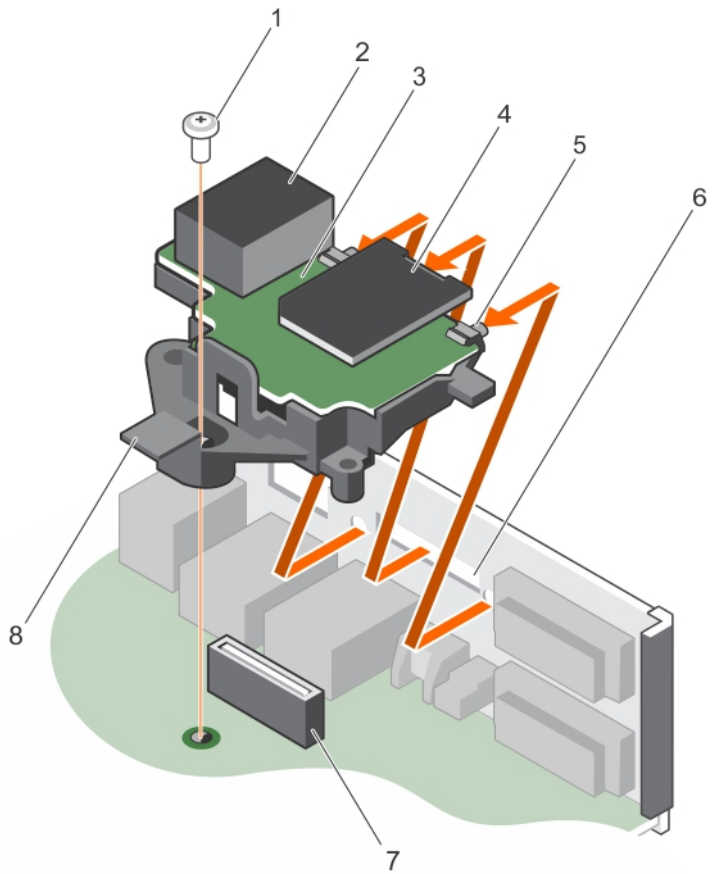

Figure 64. Removing the iDRAC port card

1. screw
2. iDRAC port
3. iDRAC port card board
4. SD vFlash media card slot
5. tabs on the iDRAC port
6. slots on the chassis

7. iDRAC port card connector
8. iDRAC port card holder

Next steps

1. Install the iDRAC port card.
2. Install the cooling shroud.
3. If disconnected, reconnect the network cable.
4. Follow the procedure listed in the After working inside your system section.

Related tasks

Removing the cooling shroud
Installing the optional iDRAC port card
Installing the cooling shroud

Installing the optional iDRAC port card

Prerequisites

CAUTION: Many repairs may only be done by a certified service technician. You should only perform troubleshooting and simple repairs as authorized in your product documentation, or as directed by the online or telephone service and support team. Damage due to servicing that is not authorized by Dell is not covered by your warranty. Read and follow the safety instructions that are shipped with your product.

1. Ensure that you follow the safety guidelines listed in the Safety instructions section.
2. Follow the procedure listed in the Before working inside your system section.
3. Keep the Phillips #2 screwdriver ready.
4. Remove the cooling shroud.

Steps

1. Align and insert the tabs on the iDRAC port card into the slots on the chassis.
2. Insert the iDRAC port card into the connector on the system board.
3. Tighten the screw that secures the iDRAC port card holder to the system board.

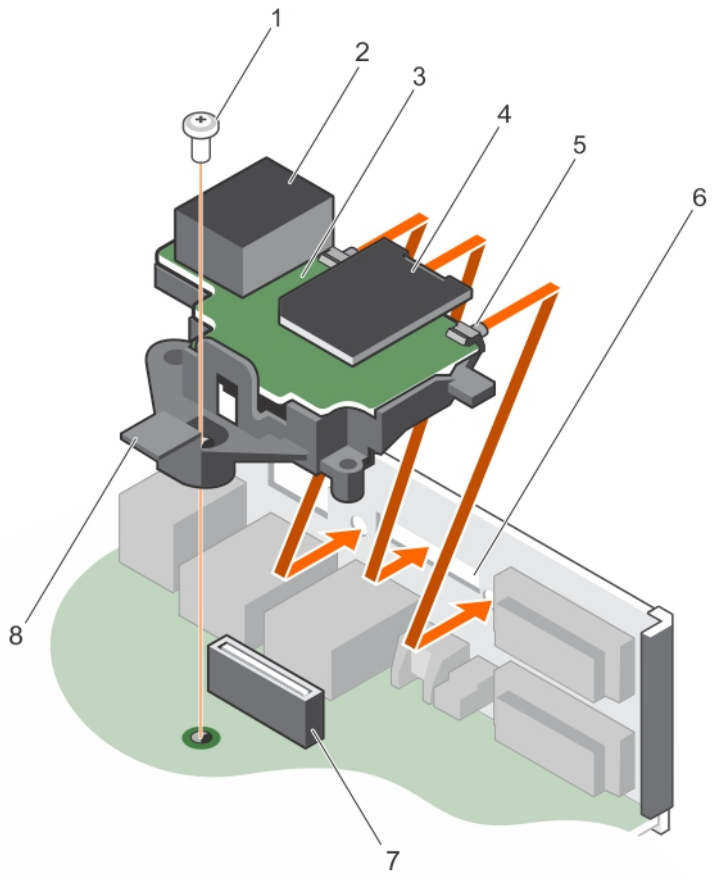

Figure 65. Installing the iDRAC port card

1. screw
2. iDRAC port
3. iDRAC port card board
4. SD vFlash media card slot
5. tabs on the iDRAC port
6. slots on the chassis
7. iDRAC port card connector
8. iDRAC port card holder

Next steps

1. Install the cooling shroud.
2. If disconnected, reconnect the network cable.
3. Follow the procedure listed in the After working inside your system section.

Related tasks

Removing the cooling shroud
Installing the cooling shroud

Internal dual SD module (optional)

The Internal Dual SD Module (IDSDM) card provides two SD card slots. This card offers the following features:

- Dual card operation — maintains a mirrored configuration by using SD cards in both the slots and provides redundancy.

  NOTE: When the Redundancy option is set to Mirror Mode in the Integrated Devices screen of System Setup, the information is replicated from one SD card to another.
- Single card operation — single card operation is supported, but without redundancy.

Removing an (optional) internal SD card

Prerequisites

CAUTION: Many repairs may only be done by a certified service technician. You should only perform troubleshooting and simple repairs as authorized in your product documentation, or as directed by the online or telephone service and support team. Damage due to servicing that is not authorized by Dell is not covered by your warranty. Read and follow the safety instructions that are shipped with your product.

1. Follow the safety guidelines listed in the Safety instructions section.
2. Follow the procedure listed in the Before working inside your system section.
3. Remove the cooling shroud.

Steps

1. Locate the SD card slot on the internal dual SD module and press the card to release it from the slot.

   NOTE: Temporarily label each SD card with its corresponding slot number before removal. Re-install the SD card(s) into the corresponding slots.

2. Lift the SD card away from the internal dual SD module.

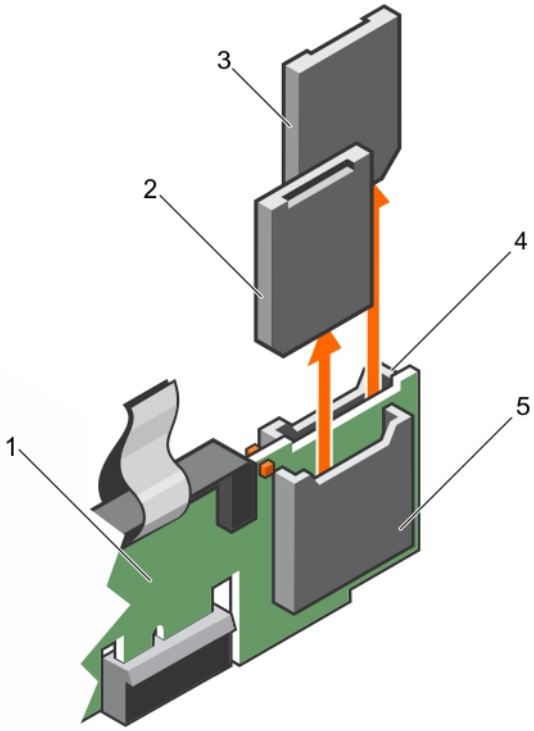

Figure 66. Removing internal SD card.

1. Internal Dual SD module
2. SD card 1
3. SD card 2
4. SD card slot 2
5. SD card slot 1

Next steps

1. Install an internal SD card.
2. Follow the procedure listed in the After working inside your system section.

Installing an (optional) internal SD card

Prerequisites

CAUTION: Many repairs may only be done by a certified service technician. You should only perform troubleshooting and simple repairs as authorized in your product documentation, or as directed by the online or telephone service and support team. Damage due to servicing that is not authorized by Dell is not covered by your warranty. Read and follow the safety instructions that are shipped with your product.

1. Follow the safety guidelines listed in the Safety instructions section.
2. Follow the procedure listed in the Before working inside your system section.
3. Ensure that the **Internal SD Card Port** option is set to **Enabled** in System Setup.
4. If installed, remove the cooling shroud.

Steps

1. Locate the SD card connector on the internal dual SD module. Orient the SD card appropriately and insert the contact-pin end of the card into the slot.

   NOTE: The slot is keyed to ensure correct insertion of the card.

2. Press the card into the card slot to lock it into place.

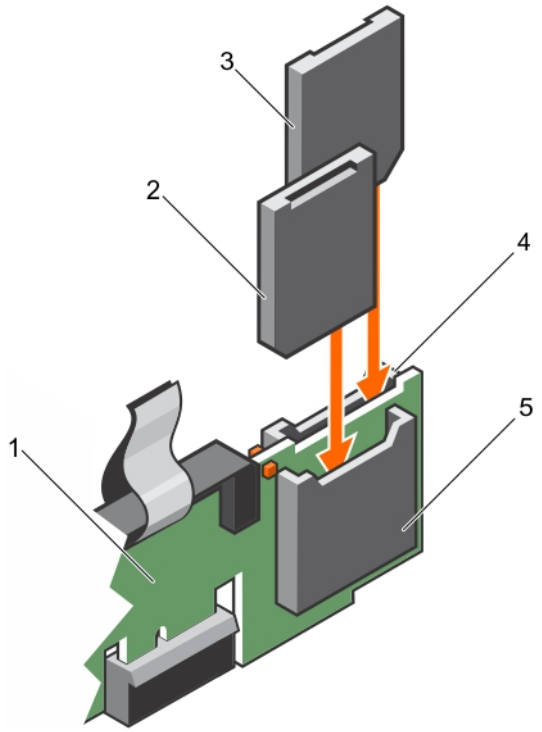

Figure 67. Installing internal SD card.

1. Internal Dual SD module
2. SD card 1
3. SD card 2
4. SD card slot 2
5. SD card slot 1

Next steps

Removing the optional internal dual SD module

Prerequisites

CAUTION: Many repairs may only be done by a certified service technician. You should only perform troubleshooting and simple repairs as authorized in your product documentation, or as directed by the online or telephone service and support team. Damage due to servicing that is not authorized by Dell is not covered by your warranty. Read and follow the safety instructions that are shipped with your product.

1. Follow the safety guidelines listed in the Safety instructions section.
2. Follow the procedure listed in the Before working inside your system section.
3. If installed, remove the SD cards.

   NOTE: Temporarily label each SD card with its corresponding slot number before removal. Reinstall the SD cards into the corresponding slots.

Steps

1. Locate the internal dual SD module (IDSDM) on the system board. To locate the internal dual SD module connector, see the System board connectors section.
2. Holding the pull tab, lift the IDSDM out of the system.

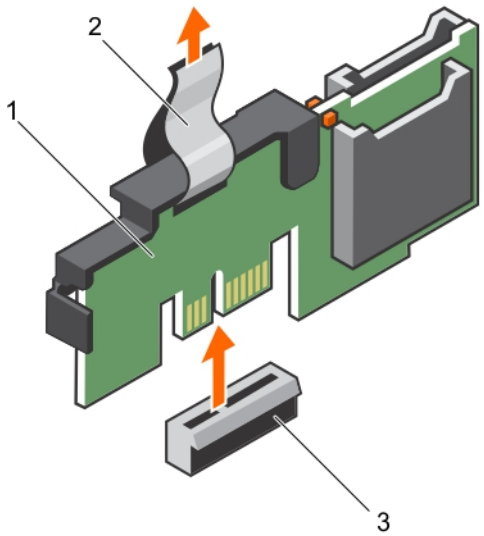

Figure 68. Removing the internal dual SD module (IDSDM)

a. IDSDM
b. pull tab
c. IDSDM connector

The following table describes the IDSDM indicator codes:

Table 26. IDSDM indicator codes

Convention	IDSDM indicator code	Description
A	Green	Indicates that the card is online.
B	Flashing green	Indicates rebuild or activity.
C	Flashing amber	Indicates card mismatch or that the card has failed.
D	Amber	Indicates that the card is offline, has failed, or is write protected.
E	Not lit	Indicates that the card is missing or is booting.

Next steps

1. Install the IDSDM.

2. If removed, install the SD cards.
3. Follow the procedure listed in the After working inside your system section.

Related tasks

Removing an optional internal SD card
Installing an optional internal SD card
Installing the optional internal dual SD module

Installing the optional internal dual SD module

Prerequisites

CAUTION: Many repairs may only be done by a certified service technician. You should only perform troubleshooting and simple repairs as authorized in your product documentation, or as directed by the online or telephone service and support team. Damage due to servicing that is not authorized by Dell is not covered by your warranty. Read and follow the safety instructions that are shipped with your product.

1. Follow the safety guidelines listed in the Safety instructions section.
2. Follow the procedure listed in the Before working inside your system section.

   NOTE: Temporarily label each SD card with its corresponding slot before removal.

Steps

1. Locate the internal dual SD module (IDSDM) connector on the system board. To locate the IDSDM connector, see the System board connectors section.
2. Align the IDSDM with the connector on the system board.
3. Push the IDSDM until it is firmly seated on the system board.

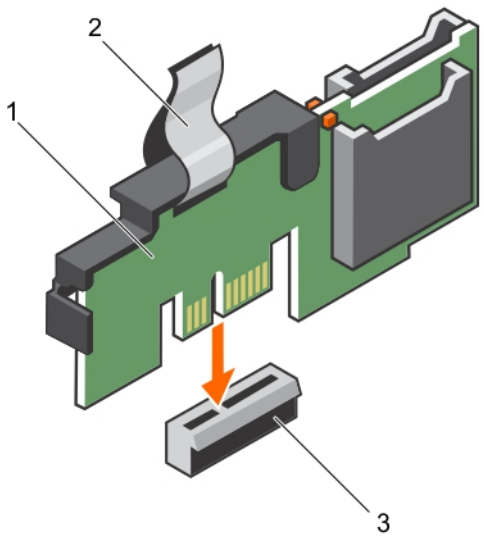

Figure 69. Installing the optional internal dual SD module

a. IDSDM
b. pull tab
c. IDSDM connector

Next steps

1. Install the SD cards.

   NOTE: Re-install the SD cards into the same slots based on the labels you had marked on the cards during removal.
2. Follow the procedure listed in the After working inside your system section.

Related tasks

Installing an optional internal SD card

Heat sink and processor

Removing the heat sink

Prerequisites

CAUTION: Many repairs may only be done by a certified service technician. You should only perform troubleshooting and simple repairs as authorized in your product documentation, or as directed by the online or telephone service and support team. Damage due to servicing that is not authorized by Dell is not covered by your warranty. Read and follow the safety instructions that are shipped with your product.

CAUTION: Never remove the heat sink from a processor unless you intend to remove the processor. The heat sink is necessary to maintain proper thermal conditions.

NOTE: This is a Field Replaceable Unit (FRU). Removal and installation procedures should be performed only by Dell certified service technicians.

1. Ensure that you follow the safety guidelines listed in the Safety instructions section.
2. Keep the Phillips #2 screwdriver ready.
3. Follow the procedure listed in the Before working inside your system section.
4. Remove the cooling shroud.

NOTE: The heat sink and processor are too hot to touch for some time after the system has been powered down. Allow the heat sink and processor to cool down before handling them.

Steps

1. Loosen one of the screws that secure the heat sink to the system board.
   Allow some time (around 30 seconds) for the heat sink to loosen from the processor.
2. Loosen the screw that is diagonally opposite the screw you first removed.
3. Repeat the procedure for the remaining two screws.
4. Lift the heat sink away from the system.

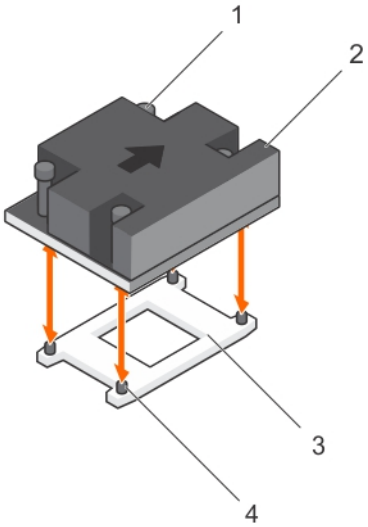

Figure 70. Removing and installing a heat sink

1. captive screw (4)
2. heat sink
3. processor socket
4. slot (4)

Next steps

1. If you are removing only a faulty heat sink, install the replacement heat sink, if not, remove the processor.
2. Follow the procedure listed in the After working inside your system section.

Related tasks

Removing the cooling shroud
Installing the processor
Installing the cooling shroud
Installing the heat sink

Removing the processor

Prerequisites

CAUTION: Many repairs may only be done by a certified service technician. You should only perform troubleshooting and simple repairs as authorized in your product documentation, or as directed by the online or telephone service and support team. Damage due to servicing that is not authorized by Dell is not covered by your warranty. Read and follow the safety instructions that are shipped with your product.

NOTE: This is a Field Replaceable Unit (FRU). Removal and installation procedures should be performed only by Dell certified service technicians.

1. Follow the safety guidelines listed in the Safety instructions section.
2. If you are upgrading your system, download the latest system BIOS version from **Dell.com/support** and follow the instructions included in the compressed download file to install the update on your system.

   NOTE: You can update the system BIOS by using the Dell Lifecycle Controller.
3. Follow the procedure listed in the Before working inside your system section.
4. Remove the cooling shroud.
5. Remove the heat sink.
6. Keep the Phillips #2 screwdriver ready.

WARNING: The processor will be hot to touch for some time after the system has been powered down. Allow the processor to cool before removing it.

CAUTION: The processor is held in its socket under strong pressure. Be aware that the release lever can spring up suddenly if not firmly held.

Steps

1. Release the socket lever by pushing the lever down and out from under the tab on the processor shield.
2. Lift the lever upward until the processor shield lifts.

   CAUTION: The processor socket pins are fragile and can be permanently damaged. Be careful not to bend the pins in the processor socket when removing the processor out of the socket.
3. Lift the processor out of the socket.

   NOTE: After removing the processor, place it in an antistatic container for reuse, return, or temporary storage. Do not touch the bottom of the processor to avoid damage to the processor contacts. Touch only the side edges of the processor.

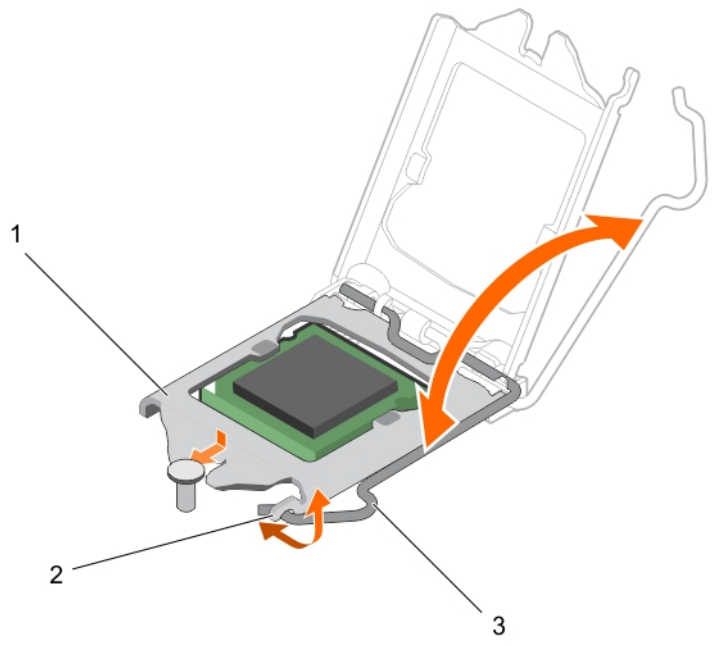

Figure 71. Opening and closing the processor shield

a. processor shield
b. tab on the processor shield
c. socket lever

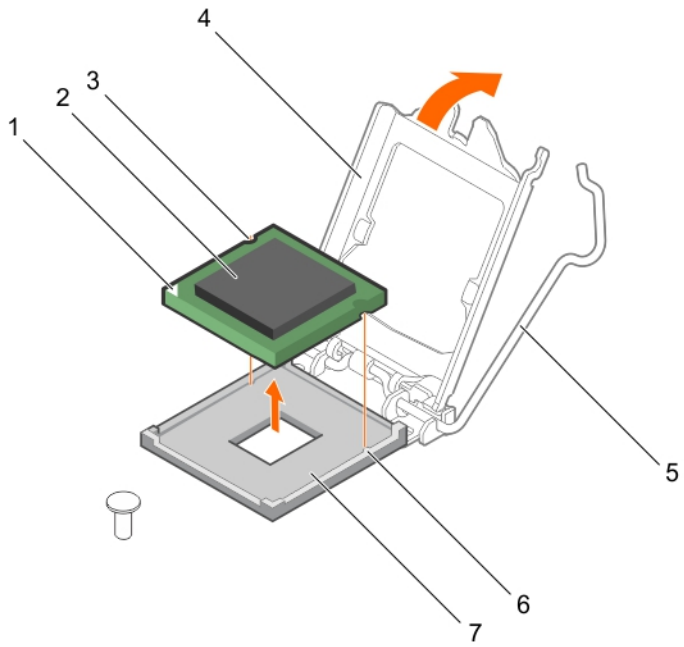

Figure 72. Removing and installing a processor

1. pin-1 indicator of processor
2. processor
3. slot (2)
4. processor shield
5. socket lever
6. socket keys (2)
7. socket

Next steps

1. Install the processor.
2. Install the heat sink.
3. Follow the procedure listed in the After working inside your system section.

Related tasks

Removing the cooling shroud
Removing the heat sink
Installing the processor
Installing the heat sink
Installing the cooling shroud

Installing a processor

Prerequisites

CAUTION: Many repairs may only be done by a certified service technician. You should only perform troubleshooting and simple repairs as authorized in your product documentation, or as directed by the online or telephone service and support team. Damage due to servicing that is not authorized by Dell is not covered by your warranty. Read and follow the safety instructions that are shipped with your product.

1. Follow the safety guidelines listed in the Safety instructions section.
2. Follow the procedure listed in the Before working inside your system section.
3. Keep the Phillips #2 screwdriver ready.
4. If you are upgrading your system, download the latest system BIOS version from **Dell.com/support** and follow the instructions included in the compressed download file to install the update on your system.

   NOTE: You can also update the system BIOS by using the Dell Lifecycle Controller.
5. Remove the cooling shroud.

   NOTE: If applicable, close the expansion card latch on the cooling shroud to release the full length card.
6. If connected, disconnect the cables from expansion card(s).
7. If installed, remove the expansion card riser.

NOTE: The heat sink and processor are too hot to touch for some time after the system has been powered down. Allow the heat sink and processor to cool down before handling them.

CAUTION: Never remove the heat sink from a processor unless you intend to remove the processor. The heat sink is necessary to maintain proper thermal conditions.

NOTE: If you are installing a single processor, it must be installed in socket CPU1.

Steps

1. Unpack the new processor.

   NOTE: If the processor has previously been used in a system, remove any remaining thermal grease from the processor by using a lint-free cloth.
2. Locate the processor socket.
3. If applicable, remove the socket protective cap.
4. Release the *open first* socket-release lever near the unlock icon by pushing the lever down and out from under the tab.
5. Similarly, release the *close first* socket-release lever near the lock icon by pushing the lever down and out from under the tab. Lift the lever 90 degrees upward.
6. Hold the tab near the lock symbol on the processor shield and lift it up and out of the way.

   CAUTION: Positioning the processor incorrectly can permanently damage the system board or the processor. Be careful not to bend the pins in the socket.

CAUTION: While removing or reinstalling the processor, wipe your hands of any contaminants. Contaminants on the processor pins such as thermal grease or oil can damage the processor.

7. Align the processor with the socket keys.

CAUTION: Do not use force to seat the processor. When the processor is positioned correctly, it engages easily into the socket.

8. Align the pin-1 indicator of the processor with the triangle on the system board.
9. Place the processor on the socket such that the slots on the processor align with the socket keys.
10. Close the processor shield.
11. Lower the *close first* socket-release lever near the lock icon and push it under the tab to lock it.
12. Similarly, lower the *open first* socket-release lever near the unlock icon and push it under the tab to lock it.

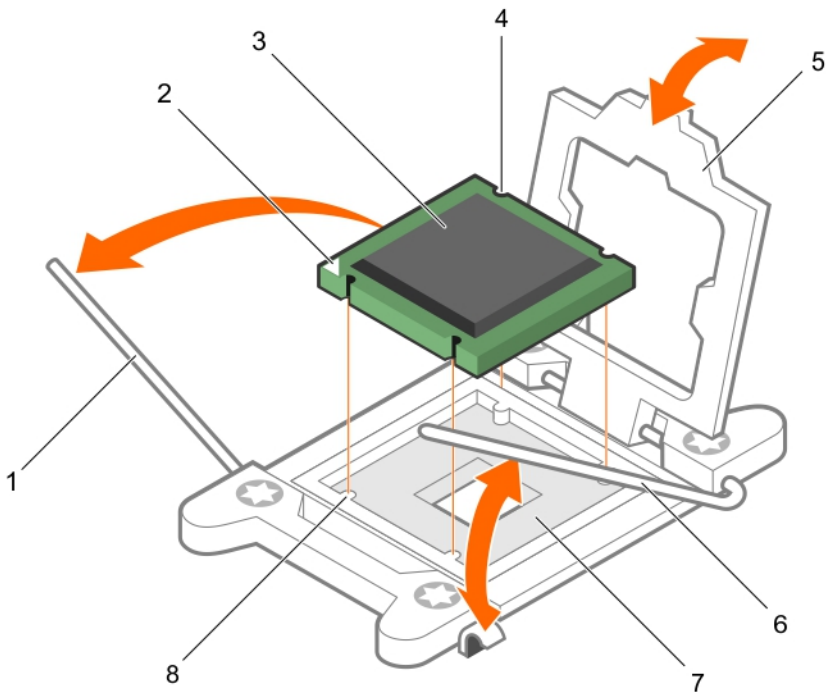

Figure 73. Installing a processor

1. socket-release lever 1
2. pin–1 corner of the processor
3. processor
4. slot (4)
5. processor shield
6. socket-release lever 2
7. processor socket
8. tab (4)

Next steps

NOTE: Ensure that you install the heat sink after you install the processor. The heat sink is necessary to maintain proper thermal conditions.

1. Install the heat sink.
2. If removed, reinstall the PCIe expansion card riser.
3. If disconnected, reconnect the cables to the expansion card(s).
4. Follow the procedure listed in the After working inside your system.
5. While booting, press F2 to enter System Setup and verify that the processor information matches the new system configuration.
6. Run the system diagnostics to verify that the new processor operates correctly.

Installing a heat sink

Prerequisites

CAUTION: Many repairs may only be done by a certified service technician. You should only perform troubleshooting and simple repairs as authorized in your product documentation, or as directed by the online or telephone service and support team. Damage due to servicing that is not authorized by Dell is not covered by your warranty. Read and follow the safety instructions that are shipped with your product.

NOTE: This is a Field Replaceable Unit (FRU). Removal and installation procedures should be performed only by Dell certified service technicians.

1. Follow the safety guidelines listed in the Safety instructions section.
2. Follow the procedure listed in the Before working inside your system section.
3. Install the processor.
4. Keep the Phillips #2 screwdriver ready.

Steps

1. If you are using an existing heat sink, remove the thermal grease from the heat sink by using a clean lint-free cloth.
2. Use the thermal grease syringe included with your processor kit to apply the grease in a thin spiral on the top of the processor.

   CAUTION: Applying too much thermal grease can result in excess grease coming in contact with and contaminating the processor socket.

   NOTE: The thermal grease syringe is intended for one-time use only. Dispose of the syringe after you use it.

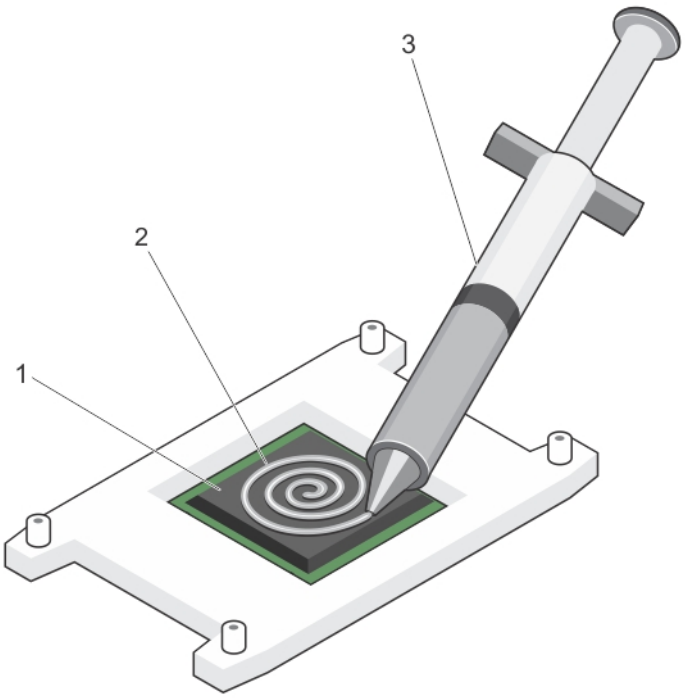

Figure 74. Applying thermal grease on the top of the processor

   a. processor
   b. thermal grease
   c. thermal grease syringe
3. Place the heat sink onto the processor.
4. Tighten one of the four screws to secure the heat sink to the system board.
5. Repeat the procedure for the remaining two screws.

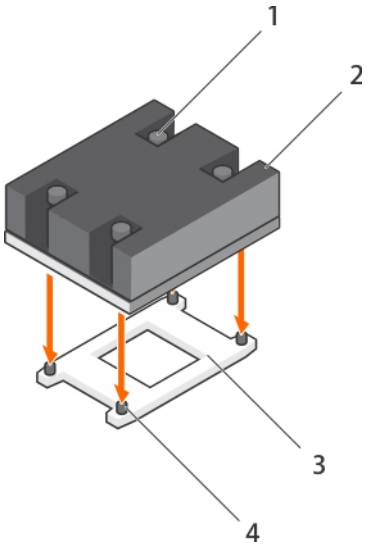

Figure 75. Installing the heat sink

1. retention screw (4)
2. heat sink
3. processor socket
4. retention screw slot (4)

Next steps

1. Follow the procedure listed in the After working inside your system section.
2. While booting, press F2 to enter System Setup and verify that the processor information matches the new system configuration.
3. Run the system diagnostics to verify that the new processor operates correctly.

Power supply units

Your system supports 350 W AC redundant power supply units (PSUs).

NOTE: If two PSUs are used, they must be of the same type and have the same maximum output power.

When two identical PSUs are installed, the PSU configuration is redundant (1 + 1). In redundant mode, power is supplied to the system equally from both PSUs to maximize efficiency.

When only one PSU is installed, the PSU configuration is non-redundant (1 + 0). Power is supplied to the system only by the single PSU.

In a non-redundant configuration, install a PSU blank in the empty PSU slot.

Hot spare feature

Your system supports the hot spare feature that significantly reduces the power overhead associated with power supply unit (PSU) redundancy.

When the hot spare feature is enabled, one of the redundant PSUs is switched to the sleep state. The active PSU supports 100 percent of the load, thus operating at higher efficiency. The PSU in the sleep state monitors output voltage of the active PSU. If the output voltage of the active PSU drops, the PSU in the sleep state returns to an active output state.

If having both PSUs active is more efficient than having one PSU in the sleep state, the active PSU can also activate the sleeping PSU.

The default PSU settings are as follows:

- If the load on the active PSU is more than 50 percent, then the redundant PSU is switched to the active state.
- If the load on the active PSU falls below 20 percent, then the redundant PSU is switched to the sleep state.

You can configure the hot spare feature by using the iDRAC settings. For more information about iDRAC settings, see the *Integrated Dell Remote Access Controller User's Guide* available at **Dell.com/idracmanuals**.

Removing a redundant power supply unit

Prerequisites

CAUTION: Many repairs may only be done by a certified service technician. You should only perform troubleshooting and simple repairs as authorized in your product documentation, or as directed by the online or telephone service and support team. Damage due to servicing that is not authorized by Dell is not covered by your warranty. Read and follow the safety instructions that are shipped with your product.

CAUTION: The system requires one power supply unit (PSU) for normal operation. On power-redundant systems, remove and replace only one PSU at a time in a system that is powered on.

1. Follow the safety guidelines listed in the Safety instructions section.
2. Disconnect the power cable from the power source.
3. Disconnect the power cable from the PSU and remove the straps that bundle and secure the system cables.
4. Unlatch and lift the optional cable management arm if it interferes with PSU removal. For information about the cable management arm, see the systems rack documentation at **Dell.com/poweredgemanuals**.

Steps

Press the release latch and pull the PSU out of the chassis.

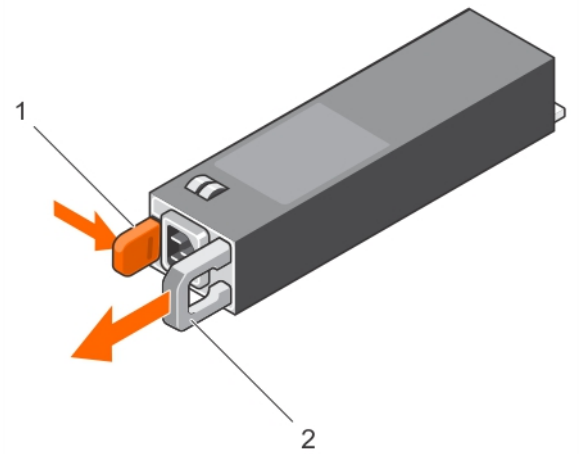

Figure 76. Removing and installing a redundant PSU

1. release latch
2. PSU connector
3. power connector
4. PSU handle

Next steps

Install the PSU.

NOTE: If you are removing the PSU permanently, install a PSU blank.

Related tasks

Installing a redundant power supply unit
Installing the power supply unit blank

Installing a redundant power supply unit

Prerequisites

CAUTION: Many repairs may only be done by a certified service technician. You should only perform troubleshooting and simple repairs as authorized in your product documentation, or as directed by the online or telephone service and

support team. Damage due to servicing that is not authorized by Dell is not covered by your warranty. Read and follow the safety instructions that are shipped with your product.

1. Follow the safety guidelines listed in the Safety instructions section.
2. Verify that both power supply units (PSUs) are of the same type and have the same maximum output power.

   NOTE: The maximum output power (shown in Watt) is listed on the PSU label.
3. If installed, remove the PSU blank.

Steps

Slide the new PSU into the chassis until the PSU is fully seated and the release latch snaps into place.

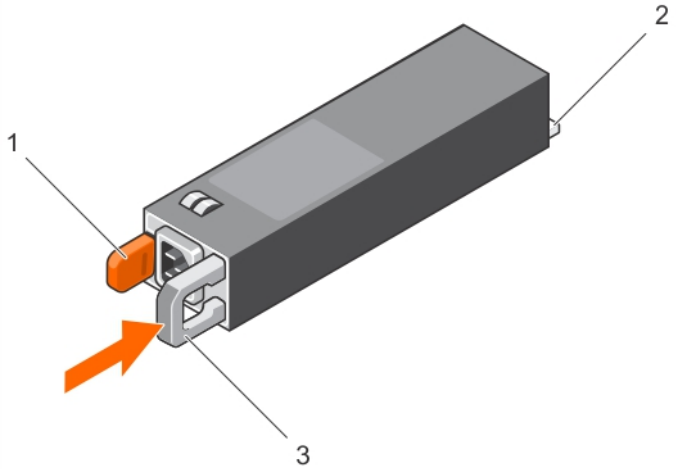

Figure 77. Installing a redundant PSU

a. release latch
b. power connector
c. PSU handle

Next steps

1. If you have unlatched the cable management arm, relatch it. For information about the cable management arm, see the rack documentation of the system.
2. Connect the power cable to the PSU and plug the cable into a power outlet.

   CAUTION: When connecting the power cable, secure the cable with the strap.

   NOTE: When installing, hot-swapping, or hot-adding a new PSU in a system with two PSUs, allow several seconds for the system to recognize the PSU and determine its status. The PSU status indicator turns green to signify that the PSU is functioning properly.

Related tasks

Removing the power supply unit blank

Removing the power supply unit blank

Prerequisites

Ensure that you follow the Safety instructions.

Steps

If you are installing a second power supply unit (PSU), remove the PSU blank in the bay by pulling the blank outward.

CAUTION: To ensure proper system cooling, the PSU blank must be installed in the second PSU bay in a non-redundant configuration. Remove the PSU blank only if you are installing a second PSU.

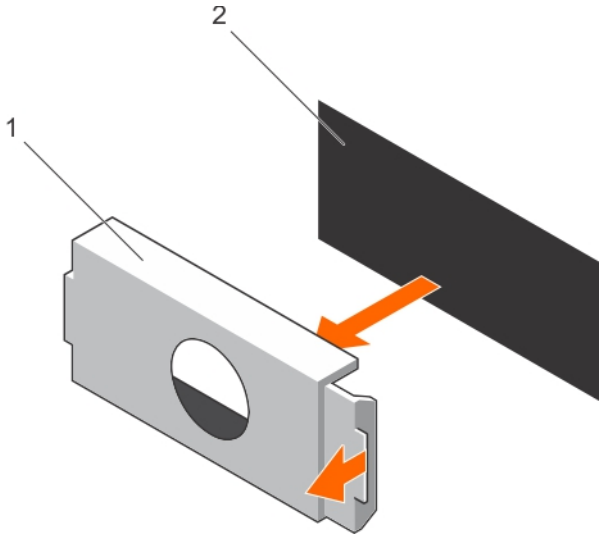

Figure 78. Removing the PSU blank

a. PSU blank
b. PSU bay

Installing the power supply unit blank

Install the power supply unit (PSU) blank only in the second PSU bay.

Prerequisites

CAUTION: To ensure proper system cooling, the PSU blank must be installed in the second PSU bay in a non-redundant configuration. Remove the PSU blank only if you are installing a second PSU.

Steps

Align the PSU blank with the PSU bay, and push the PSU blank into the chassis until it clicks into place.

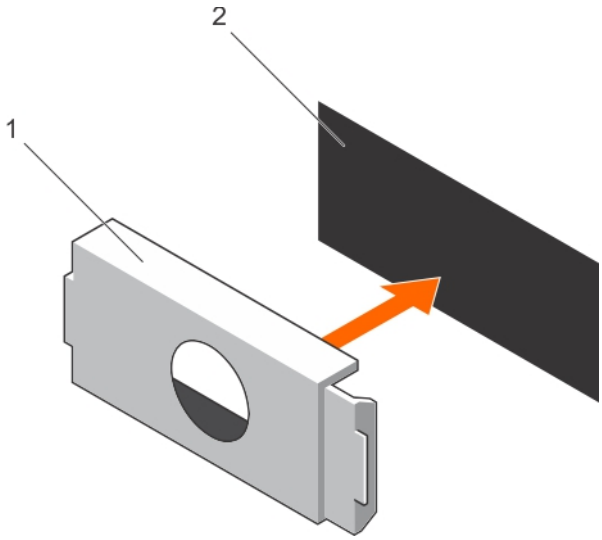

Figure 79. Installing the PSU blank

a. PSU blank
b. PSU bay

System battery

The system battery is used to power the real-time clock and storing the BIOS settings of the system.

Replacing the system battery

Prerequisites

1. Follow the safety guidelines listed in safety instructions section.
2. Follow the procedure listed in the Before working in your system section.
3. Remove the expansion card riser.
4. Keep the plastic scribe ready.

NOTE: There is a danger of a new battery exploding if it is incorrectly installed. Replace the battery only with the same or equivalent type recommended by the manufacturer. For more information, see the safety information that shipped with your system.

CAUTION: Many repairs may only be done by a certified service technician. You should only perform troubleshooting and simple repairs as authorized in your product documentation, or as directed by the online or telephone service and support team. Damage due to servicing that is not authorized by Dell is not covered by your warranty. Read and follow the safety instructions that are shipped with your product.

NOTE: This is a Field Replaceable Unit (FRU). Removal and installation procedures must be performed only by Dell certified service technicians.

Steps

1. Locate the battery socket. For more information, see the System board connectors section.

   CAUTION: To avoid damage to the battery connector, you must firmly support the connector while installing or removing a battery.

2. Use a plastic scribe to pry out the system battery as shown in the following illustration:

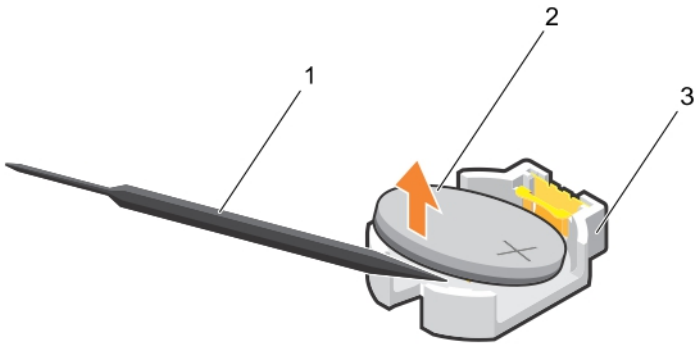

Figure 80. Removing the system battery

   a. plastic scribe
   b. positive side of the battery connector
   c. securing tabs

3. Install a new system battery by holding the battery with the "+" sign facing up and slide it under the securing tabs.
4. Press the battery into the connector until it snaps into place.

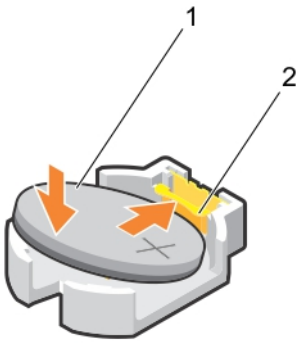

Figure 81. Installing the system battery

a. positive side of the battery connector
b. battery connector

Next steps

1. Install the expansion card riser.
2. Follow the procedure listed in the After working in your system section.
3. While booting, press F2 to enter System Setup and ensure that the battery is operating properly.
4. Enter the correct time and date in the System Setup **Time** and **Date** fields.
5. Exit System Setup.

Related tasks

Removing the expansion card riser
Installing the expansion card riser

Hard drive backplane

Depending on your system configuration, PowerEdge R330 supports:

- Four 3.5-inch or 2.5-inch SAS/SATA backplane or
- Eight 2.5-inch SAS/SATA backplane

Removing the hard drive backplane

Prerequisites

CAUTION: Many repairs may only be done by a certified service technician. You should only perform troubleshooting and simple repairs as authorized in your product documentation, or as directed by the online or telephone service and support team. Damage due to servicing that is not authorized by Dell is not covered by your warranty. Read and follow the safety instructions that are shipped with your product.

CAUTION: To prevent damage to the drives and backplane, you must remove the hard drives from the system before removing the backplane.

CAUTION: You must note the number of each hard drive and temporarily label them before removal so that you can insert them in the same locations.

1. Follow the safety guidelines listed in Safety instructions section.
2. Follow the procedure listed in the Before working inside your system section.
3. Remove all hard drives.
4. Disconnect the SAS/SATA data, signal, and power cables from the backplane.

Steps

Press the release tabs and lift the backplane upward and slide it toward the back of the chassis.

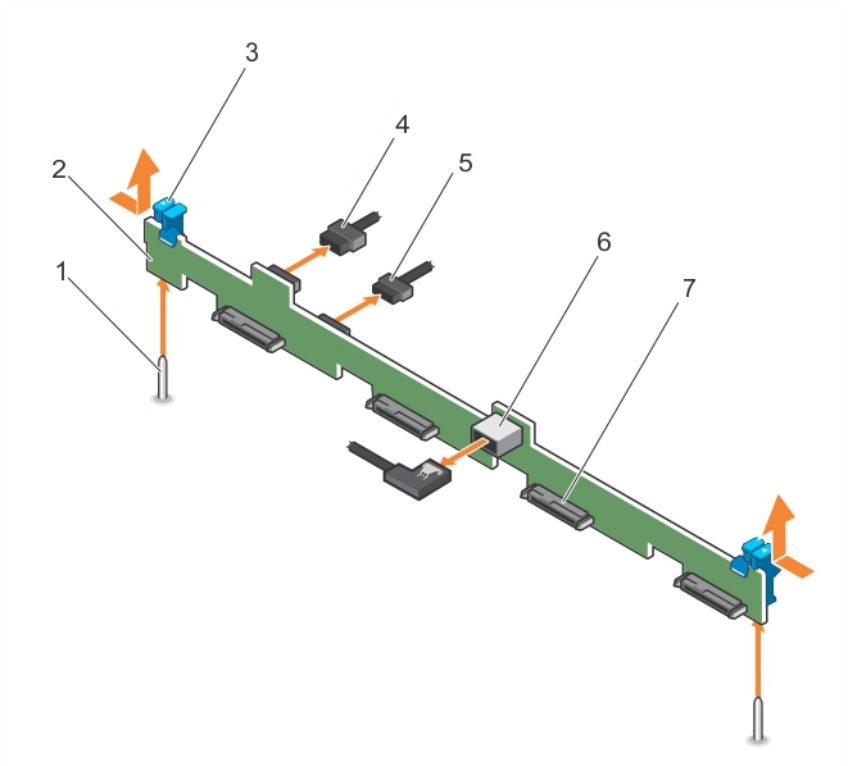

Figure 82. Removing the four 3.5-inch or four 2.5-inch hard drive SAS/SATA backplane

1. guide pin (2)
2. hard drive or SSD backplane
3. release tab (2)
4. backplane power cable
5. backplane signal cable
6. SAS A connector on the backplane
7. hard drive or SSD connector (4)

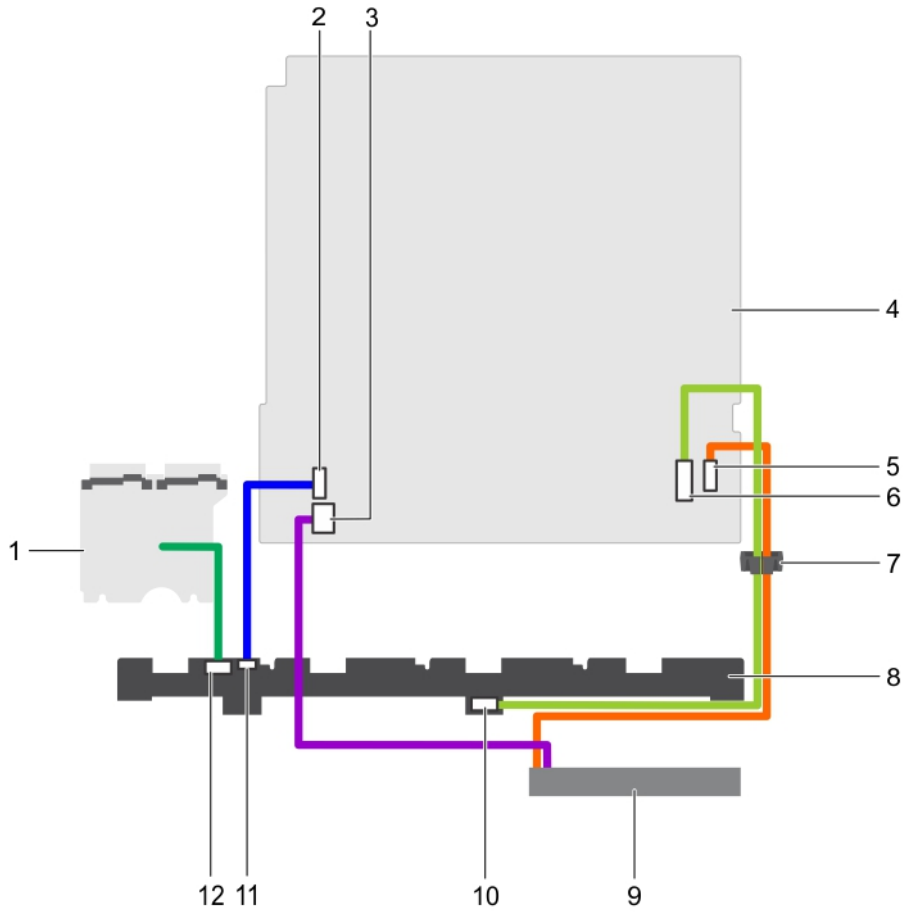

Figure 83. Cabling diagram—Four 3.5-inch or four 2.5-inch hard drive SAS/SATA backplane

1. power interposer board (PIB)
2. signal cable connector on the system board
3. optical drive power cable connector on the system board
4. system board
5. optical drive SATA connector on the system board
6. SAS connector on the system board
7. cable routing clip
8. backplane
9. optical drive
10. SAS connector on the backplane
11. signal cable connector on the backplane
12. power cable connector on the backplane

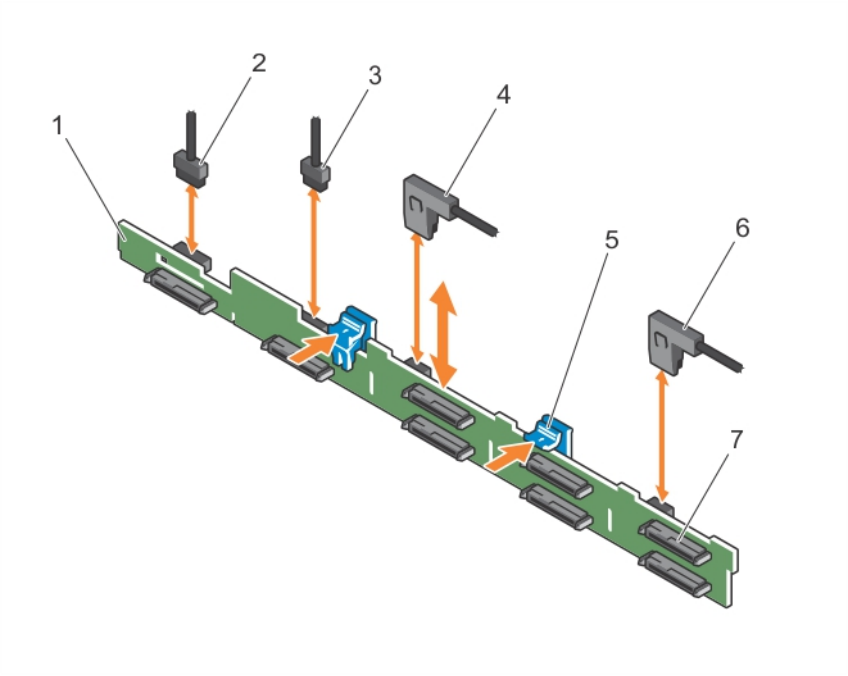

Figure 84. Removing the eight 2.5-inch SAS/SATA backplane

1. hard drive/SSD backplane
2. backplane power cable
3. backplane signal cable
4. SAS A cable connector
5. release tab (2)
6. SAS B cable connector
7. hard drive or SSD connector (8)

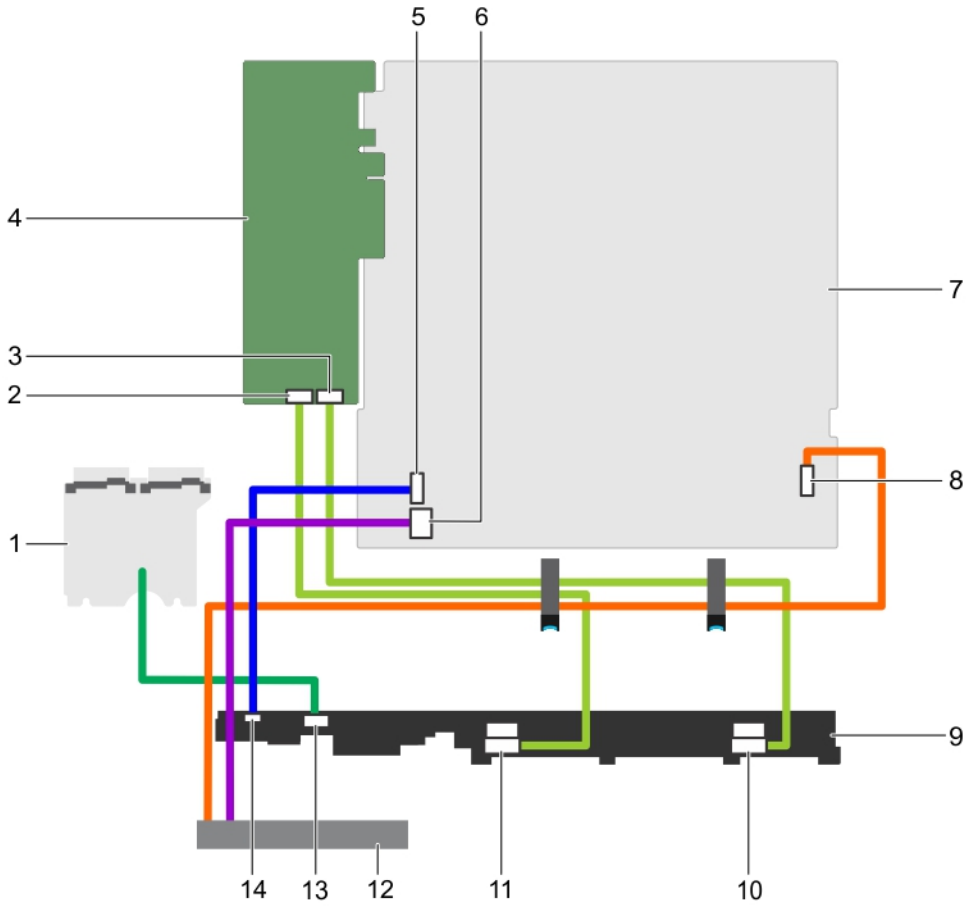

Figure 85. Cabling diagram—Eight 2.5-inch SAS/SATA backplane with PERC card

1. power interposer board (PIB)
2. Connector A on the PERC card
3. Connector B on the PERC card
4. PERC card
5. signal cable connector on the system board
6. optical drive power cable connector on the system board
7. system board
8. optical drive SATA connector on the system board
9. backplane
10. SAS B connector on the backplane
11. SAS A connector on the backplane
12. optical drive
13. power cable connector on the backplane
14. signal cable connector on the backplane

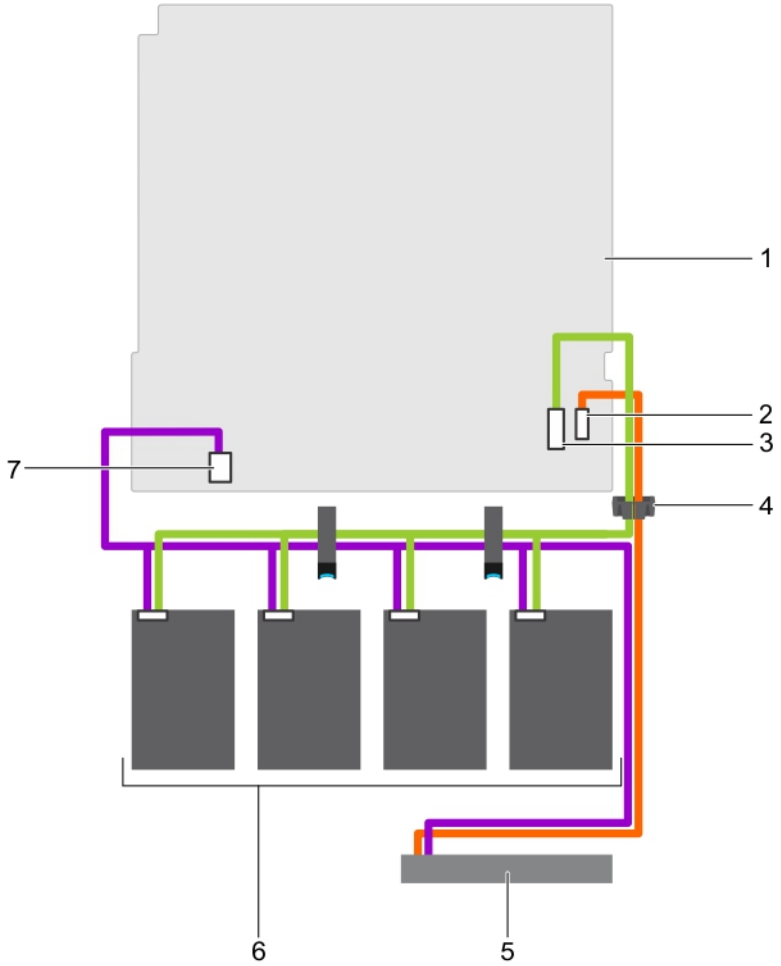

Figure 86. Cabling diagram—Four 3.5-inch cabled hard drives

1. system board
2. optical drive SATA connector on the system board
3. SAS connector on the system board
4. cable routing clip
5. optical drive
6. cabled hard drive (4)
7. hard drive and optical drive power connector on the system board

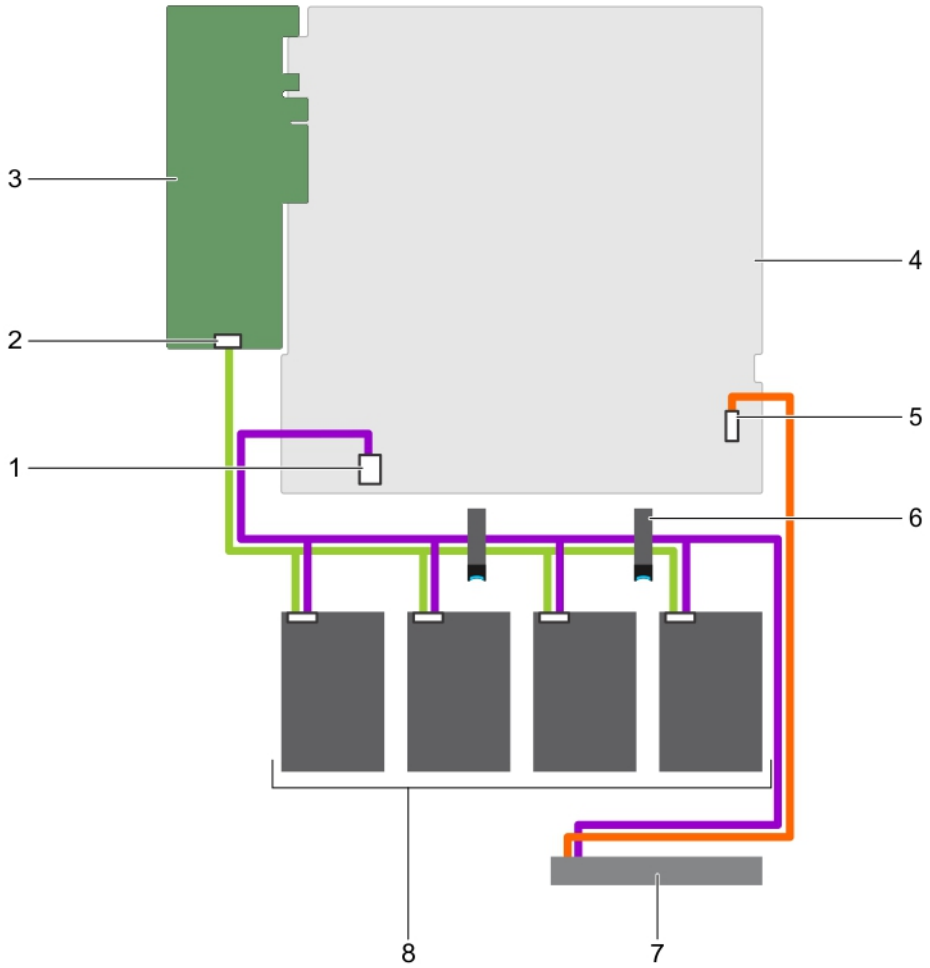

Figure 87. Cabling diagram—Four 3.5-inch cabled hard drives and PERC card

1. hard drive and optical drive power connector on the system board
2. Connector A on the PERC card
3. PERC card
4. system board
5. optical drive SATA connector on the system board
6. cable routing clip
7. optical drive
8. cabled hard drive (4)

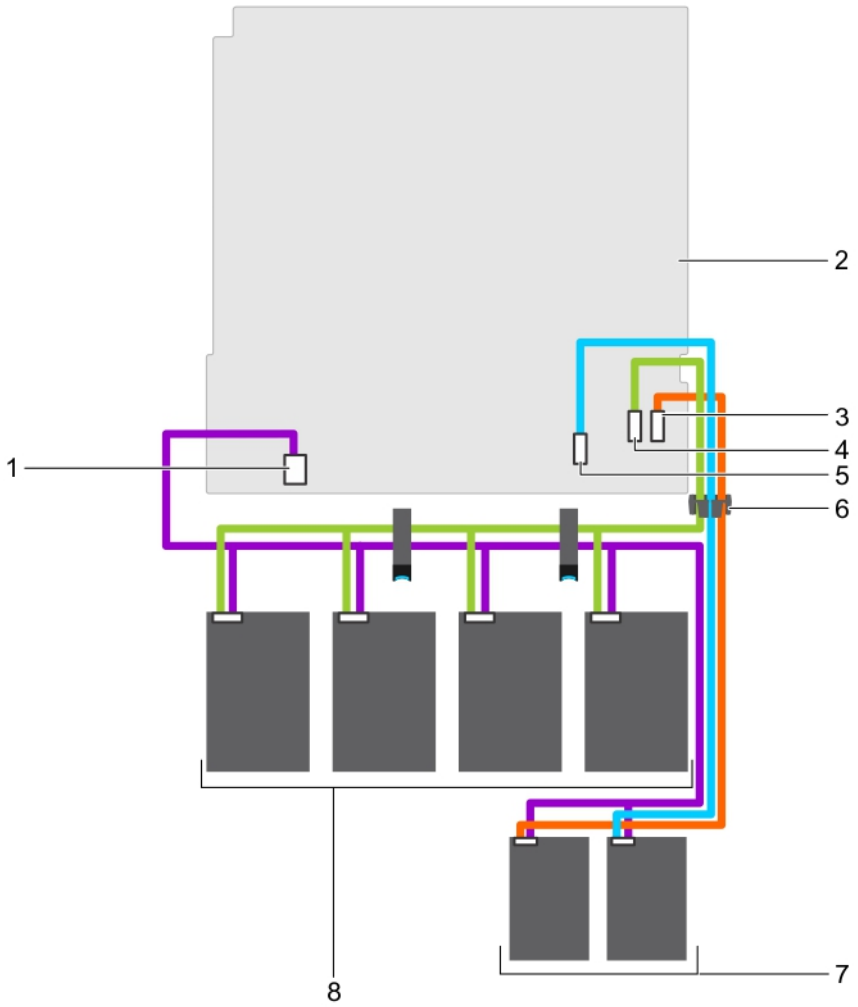

Figure 88. Cabling diagram—Four 3.5-inch cabled hard drives and two 1.8-inch SSDs

1. hard drive/SSD power cable connector on the system board
2. system board
3. optical drive/solid state drive (SSD) SATA connector on the system board
4. SATA0-3 connector on the system board
5. SATA SSD connector on the system board
6. cable routing clip
7. 1.8-inch SSD (2)
8. cabled hard drive (4)

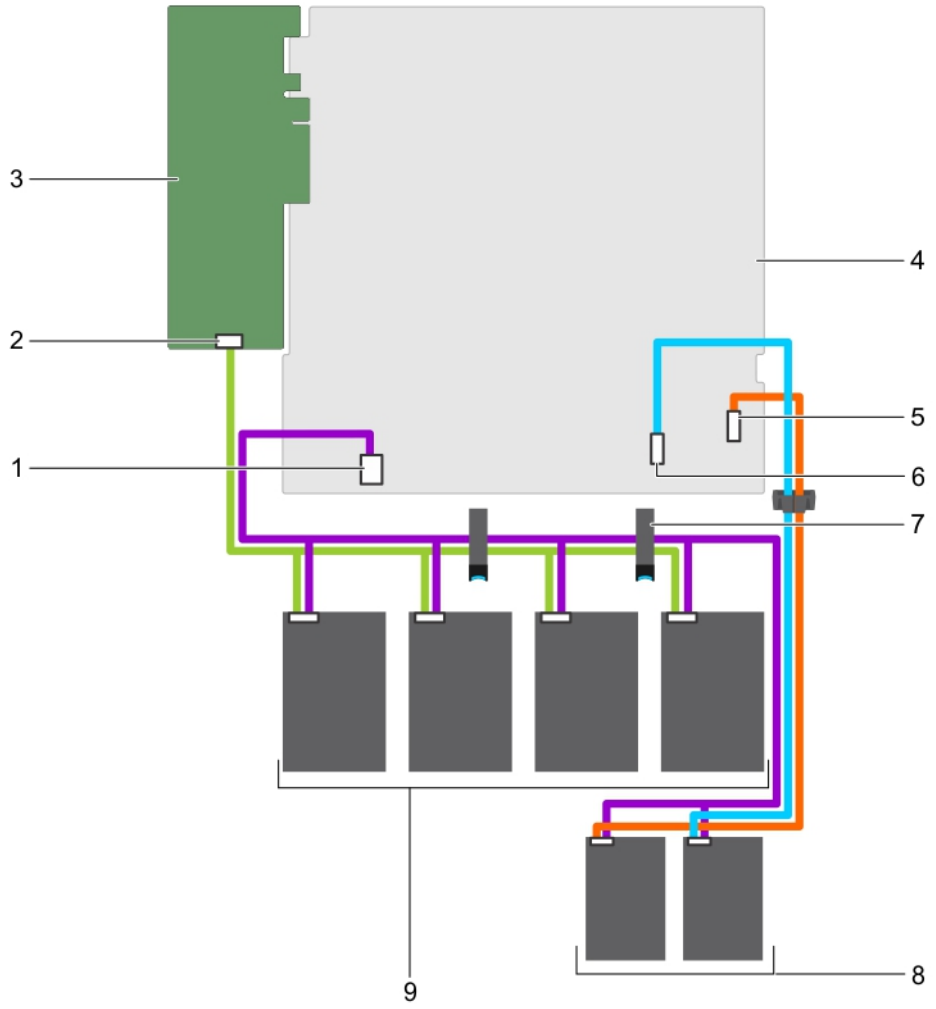

Figure 89. Cabling diagram—Four 3.5-inch cabled hard drives, two 1.8-inch SSDs, and PERC card

1. hard drive/SSD power cable connector on the system board
2. Connector A on the PERC card
3. PERC card
4. system board
5. optical drive/solid state drive SATA connector on the system board
6. SATA SSD connector on the system board
7. cable routing latch
8. 1.8-inch SSD (2)
9. cabled hard drive (4)

Next steps

1. Install the hard drive backplane.
2. Follow the procedure listed in the After working inside your system section.

Related tasks

Removing a hot swappable hard drive carrier
Installing the hard drive backplane

Installing the hard drive backplane

Prerequisites

CAUTION: Many repairs may only be done by a certified service technician. You should only perform troubleshooting and simple repairs as authorized in your product documentation, or as directed by the online or telephone service and

support team. Damage due to servicing that is not authorized by Dell is not covered by your warranty. Read and follow the safety instructions that are shipped with your product.

CAUTION: To prevent damage to the control panel flex cable, do not bend the control panel flex cable after it is inserted into the connector.

1. Follow the safety guidelines listed in Safety instructions section.
2. Follow the procedure listed in the Before working inside your system section.

Steps

1. Align the slots on the hard drive backplane with the hooks on the chassis.
2. Press down the hard drive backplane until the release tabs snap into place.
3. Connect the SAS/SATA/SSD data, signal, and power cables to the backplane.

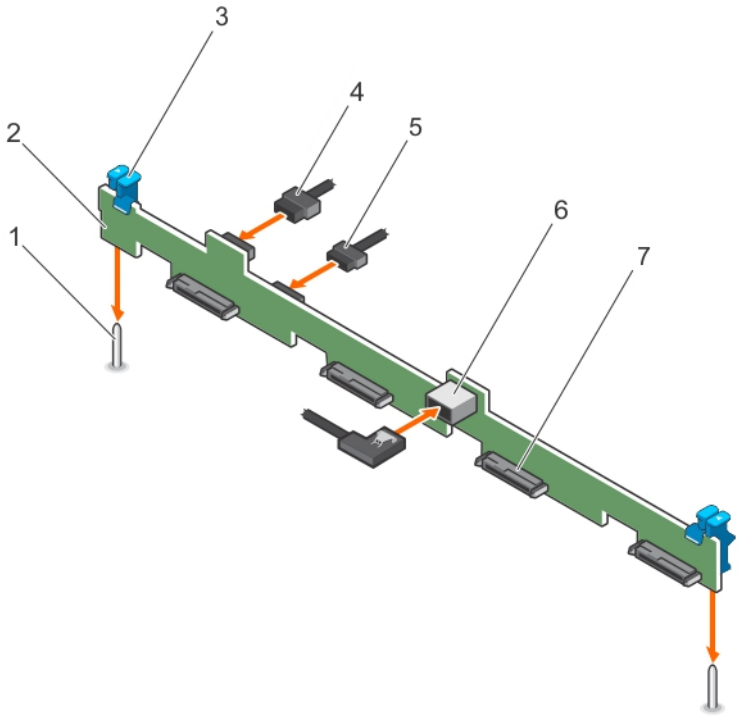

Figure 90. Installing the four 3.5 inch hard drive SAS/SATA backplane

1. guide (2)
2. hard-drive/SSD backplane
3. release tab (2)
4. backplane power cable
5. backplane signal cable
6. SAS_A connector on the backplane
7. hard-drive/SSD connector (4)

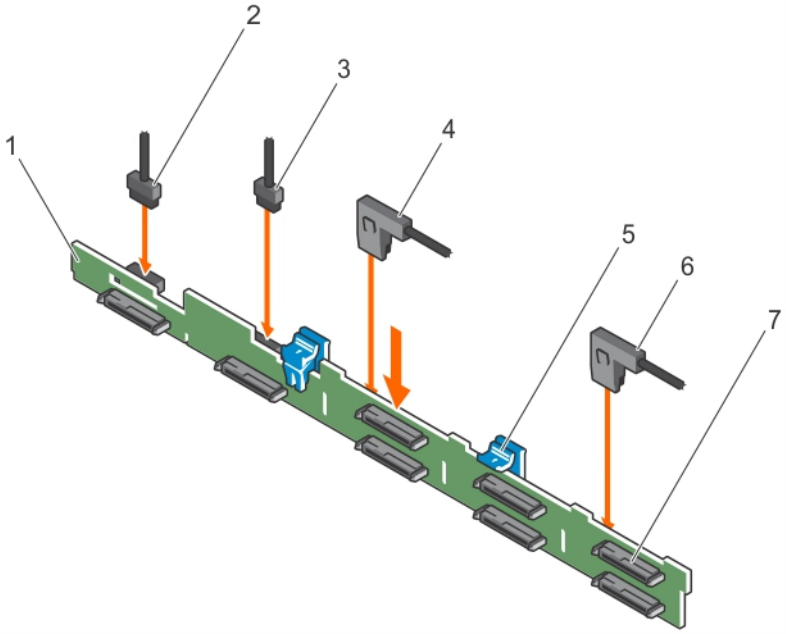

Figure 91. Installing the eight 2.5 inch SAS/SATA backplane

1. hard-drive/SSD backplane
2. backplane power cable
3. backplane signal cable
4. SAS_A cable connector
5. release tab (2)
6. SAS_B cable connector
7. hard-drive/SSD connector (8)

Next steps

1. Install the hard drives in their original locations.
2. Follow the procedure listed in the After working inside your system section.

Related tasks

Installing a hot swappable hard drive carrier

Control panel assembly

This section provides information about removing or installing the LCD control panel assembly.

Removing the LCD control panel assembly

Prerequisites

CAUTION: Many repairs may only be done by a certified service technician. You should only perform troubleshooting and simple repairs as authorized in your product documentation, or as directed by the online or telephone service and support team. Damage due to servicing that is not authorized by Dell is not covered by your warranty. Read and follow the safety instructions that are shipped with your product.

1. Follow the safety guidelines listed in safety instructions section.
2. Follow the procedure listed in the Before working inside your system section.
3. Keep the Phillips #2 screwdriver ready.

Steps

1. Disconnect the cables from the control panel board.

   CAUTION: Do not use excessive force when removing the control panel as it can damage the connectors.

2. Hold the top edge of the LCD control panel at the corners and pull upward until the LCD control panel tabs are released.

3. Pull the control panel away from the chassis.
4. Remove the screws securing the LCD control panel board.
5. Lift the LCD control panel board away from the chassis.

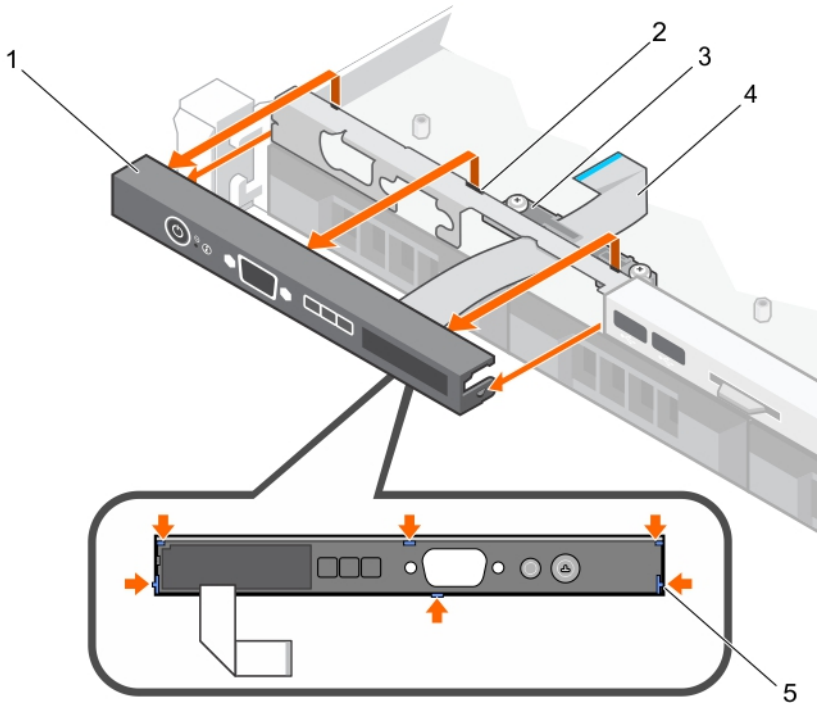

Figure 92. Removing the LCD control panel—four 3.5-inch hot swappable hard drive chassis

1. LCD control panel
2. notches (6)
3. display module cable retention clip
4. display module cable
5. tabs on the LCD control panel (6)

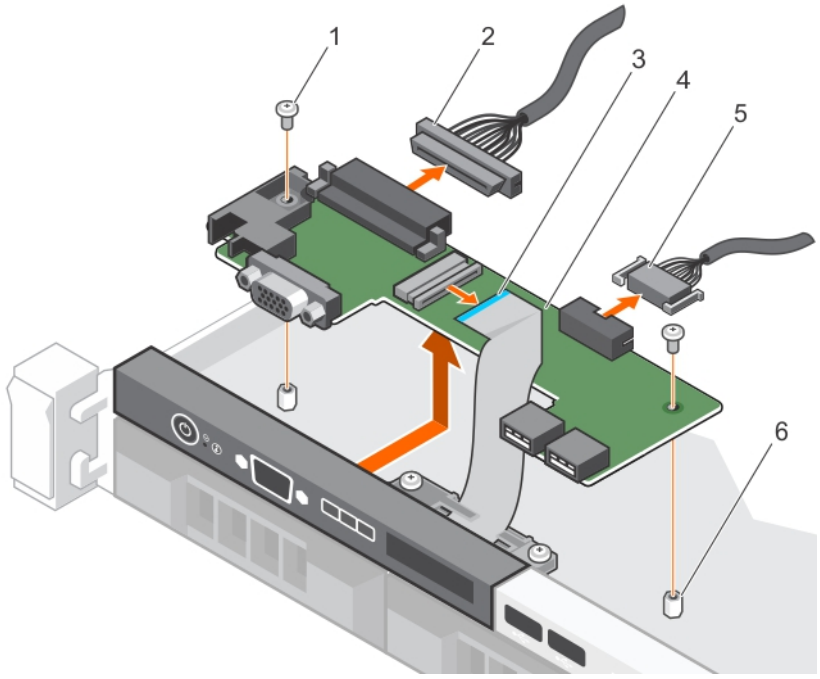

Figure 93. Removing the LCD control panel board—four hard drive chassis

1. screw (2)
2. control panel connector cable
3. display module cable
4. LCD control panel board
5. USB connector cable
6. standoff on the chassis (2)

Next steps

1. Install the LCD control panel assembly.
2. Follow the procedure listed in the After working inside your system section.

Related tasks

Installing the LCD control panel assembly

Installing the LCD control panel assembly

Prerequisites

CAUTION: Many repairs may only be done by a certified service technician. You should only perform troubleshooting and simple repairs as authorized in your product documentation, or as directed by the online or telephone service and support team. Damage due to servicing that is not authorized by Dell is not covered by your warranty. Read and follow the safety instructions that are shipped with your product.

1. Follow the safety guidelines listed in Safety instructions section.
2. Follow the procedure listed in the Before working inside your system section.
3. Keep the Phillips #2 screwdriver ready.

Steps

1. Align the tabs on the control panel with the notches on the chassis.
2. Route the LCD cable through the cable retention clip.
3. Push the control panel toward the chassis until it snaps into place.
4. Align and install the LCD control panel board.
5. Secure the board in place with screws.

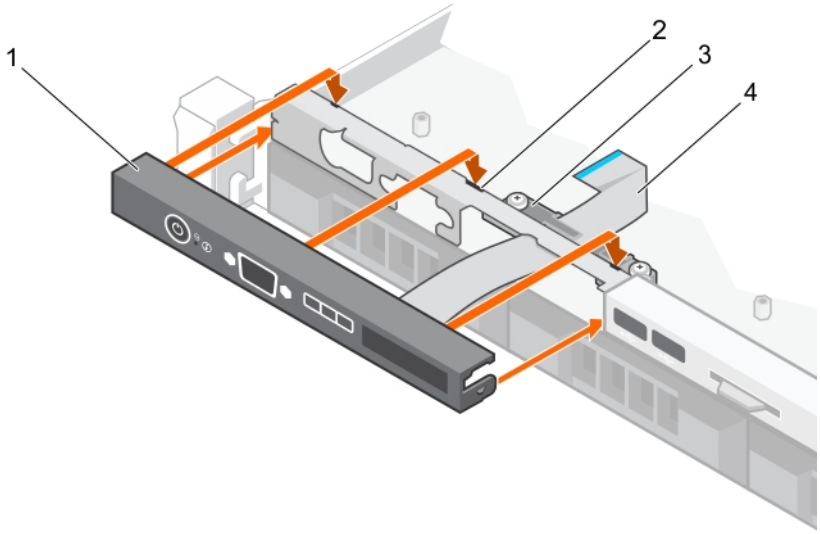

Figure 94. Installing the LCD control panel—four 3.5-inch hot swappable hard drive chassis

1. LCD control panel
2. notches (6)
3. display module cable retention clip
4. display module cable
5. tabs on the LCD control panel (6)

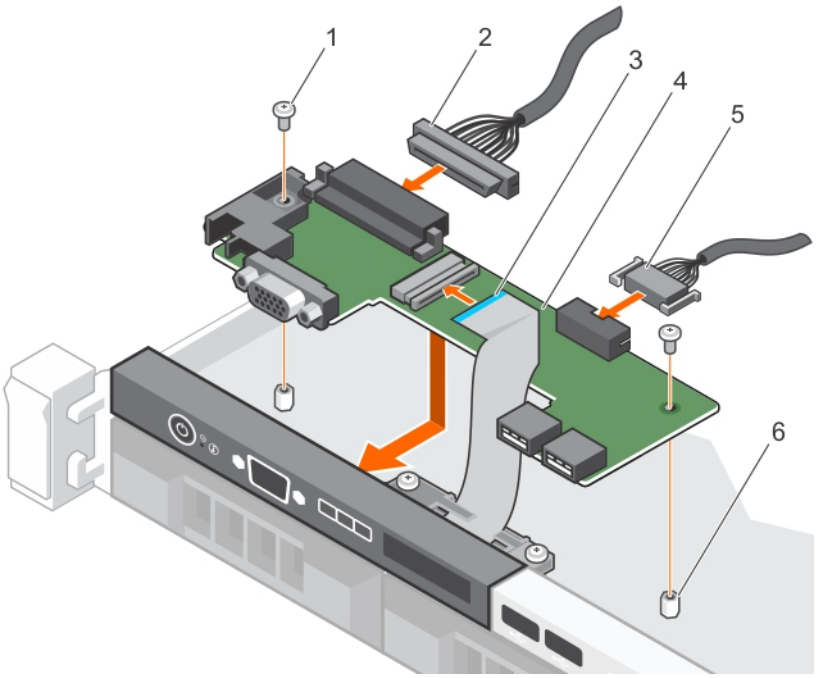

Figure 95. Installing the LCD control panel board—four hard drive chassis

1. screw (2)
2. control panel connector cable
3. display module cable
4. LCD control panel board
5. USB connector cable
6. standoff on the chassis (2)

Next steps

Follow the procedure listed in the After working inside your system section.

Removing the LED control panel assembly

Prerequisites

CAUTION: Many repairs may only be done by a certified service technician. You should only perform troubleshooting and simple repairs as authorized in your product documentation, or as directed by the online or telephone service and support team. Damage due to servicing that is not authorized by Dell is not covered by your warranty. Read and follow the safety instructions that are shipped with your product.

1. Follow the safety guidelines listed in Safety instructions section.
2. Follow the procedure listed in the Before working inside your system section.
3. Disconnect the cables connected to the control panel module.

CAUTION: Do not use excessive force when removing the control panel as it can damage the connectors.

Steps

1. For cabled hard drive chassis, perform the following steps:
   a) Remove the screw(s) that secure the LED panel to the chassis.
   b) Remove the LED panel.
2. Remove the screws that secure the control panel board to the chassis.
3. Lift the control panel board away from the chassis.

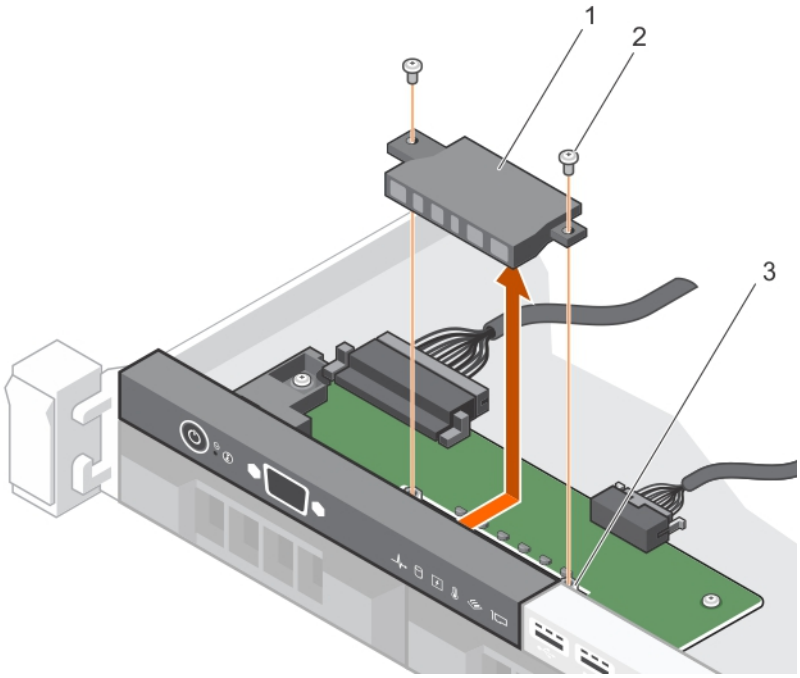

Figure 96. Removing the LED module—four cabled hard drive chassis

a. LED module
b. screw (2)
c. slot on the chassis

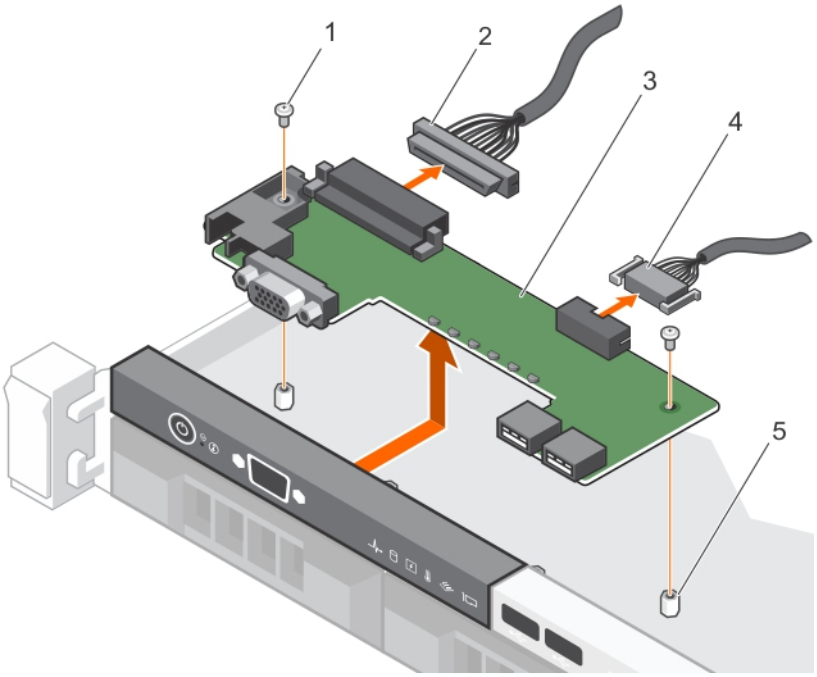

Figure 97. Removing the LED control panel board—four cabled hard drive chassis

1. screw (2)
2. control panel connector cable
3. control panel board
4. USB connector cable
5. standoff on the chassis (2)

Next steps

1. Install the LED control panel assembly.
2. Follow the procedure listed in the After working inside your system section.

Related tasks

Installing the LED control panel assembly

Installing the LED control panel assembly

Prerequisites

CAUTION: Many repairs may only be done by a certified service technician. You should only perform troubleshooting and simple repairs as authorized in your product documentation, or as directed by the online or telephone service and support team. Damage due to servicing that is not authorized by Dell is not covered by your warranty. Read and follow the safety instructions that are shipped with your product.

1. Follow the safety guidelines listed in safety instructions section.
2. Follow the procedure listed in the Before working inside your system section.

Steps

1. For cabled hard drive systems, perform the following steps:
   a) Insert the LED panel into the slot in the chassis.
   b) Secure the LED panel with the screws.
2. Insert the control panel board into the slot in the chassis and align the two screw holes on the control panel board with the corresponding holes on the chassis.
3. Secure the control panel board with the screws.
4. Connect all the cables to the control panel board.

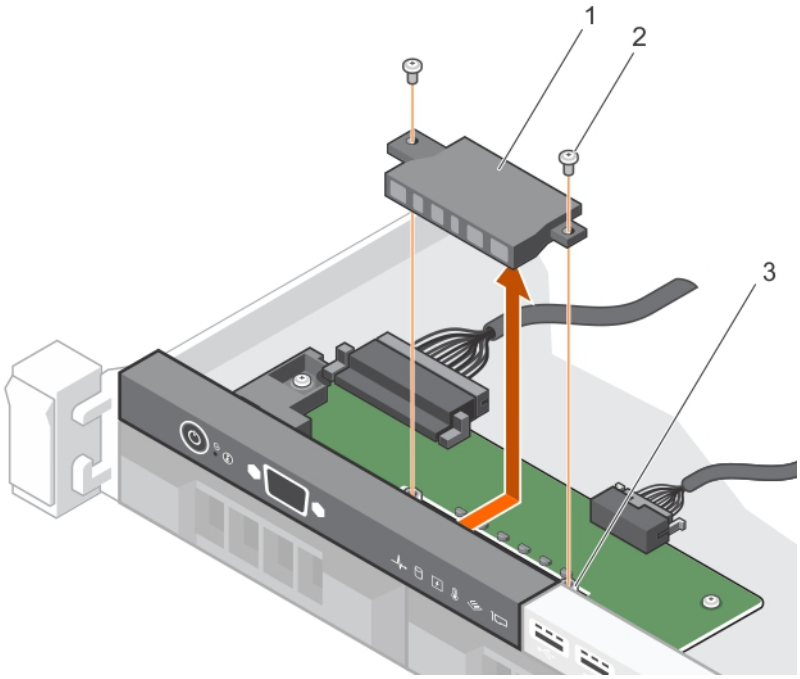

Figure 98. Installing the LED module—four cabled hard drive chassis

a. LED module
b. screw (2)
c. slot on the chassis

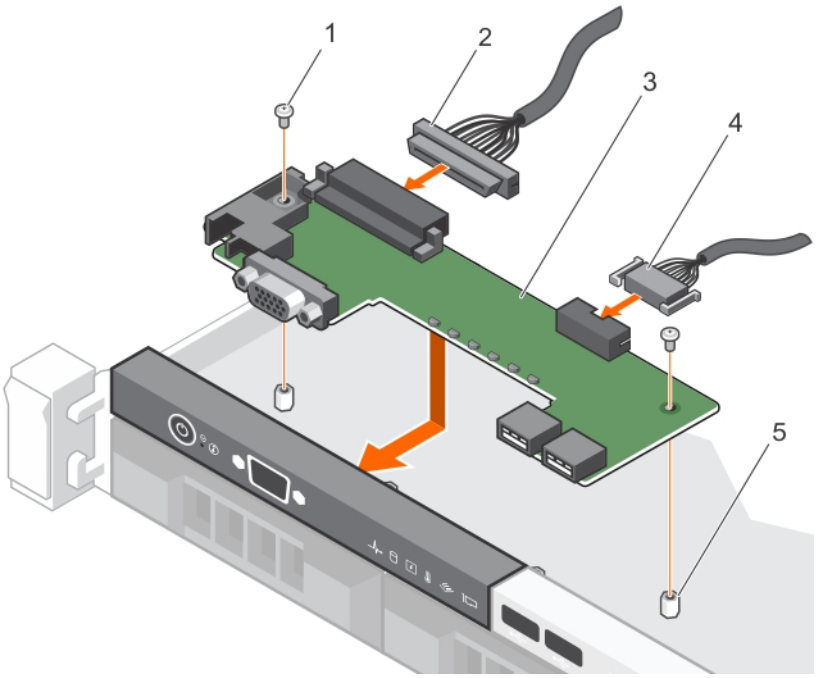

Figure 99. Installing the LED control panel board—four cabled hard drive chassis

Next steps

Follow the procedure listed in the After working inside your system section.

Power interposer board

The power interposer board (PIB) is a board that connects the redundant power supply units (PSUs) to the system board. The PIB is only supported in systems with redundant PSUs.

Removing the power interposer board

Prerequisites

CAUTION: Many repairs may only be done by a certified service technician. You should only perform troubleshooting and simple repairs as authorized in your product documentation, or as directed by the online or telephone service and support team. Damage due to servicing that is not authorized by Dell is not covered by your warranty. Read and follow the safety instructions that are shipped with your product.

NOTE: The power interposer board is present only in systems that support redundant power supplies.

1. Follow the safety guidelines listed in Safety instructions section.
2. Follow the procedure listed in the Before working inside your system section.
3. Remove the power supply units from the system.

Steps

1. Disconnect the power distribution cables from the system board.
2. Remove the two screws securing the power interposer board (PIB) to the chassis.
3. Holding the PIB, lift it slightly to disengage it from the screw holes.
4. Slide the PIB toward the back of the chassis and lift it out of the chassis.

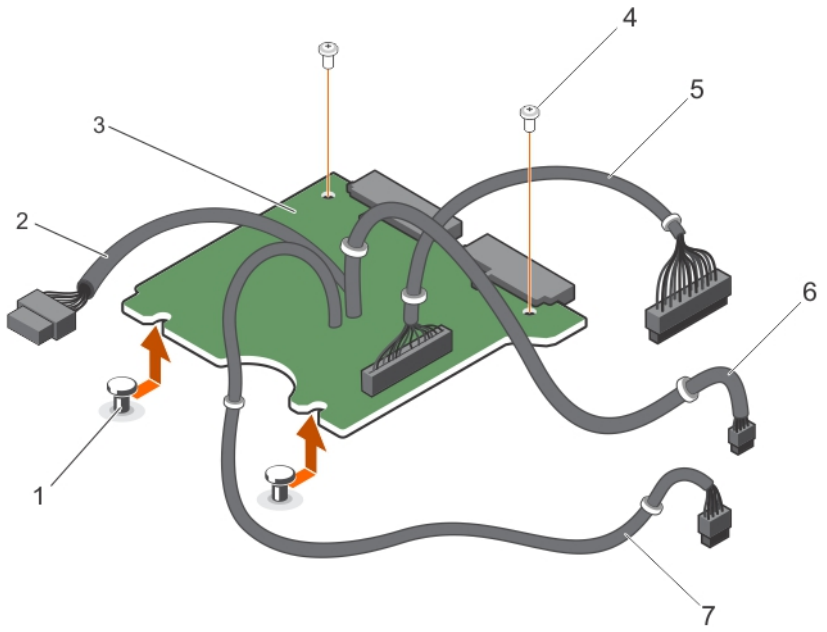

Figure 100. Removing the power interposer board

1. standoffs (2)
2. 10 pin cable to hard drive backplane
3. power interposer board
4. screw (2)
5. 28 pin cable to system board
6. 4 pin cable to system board
7. 8 pin cable to system board

NOTE: For systems without a hard drive backplane, do not connect the 10 pin cable.

Next steps

1. Install the power interposer board.
2. Follow the procedure listed in the After working inside your system section.

Related tasks

Removing a redundant power supply unit
Installing the power interposer board

Installing the power interposer board

Prerequisites

CAUTION: Many repairs may only be done by a certified service technician. You should only perform troubleshooting and simple repairs as authorized in your product documentation, or as directed by the online or telephone service and support team. Damage due to servicing that is not authorized by Dell is not covered by your warranty. Read and follow the safety instructions that are shipped with your product.

1. Ensure that you follow the Safety instructions.
2. Follow the procedure listed in Before working inside your system.
3. Keep the Phillips #2 screwdriver ready.

Steps

1. Align the power interposer board (PIB) with the standoffs on the chassis.
2. Install the two screws that secure the PIB to the chassis.
3. Connect the power distribution cables to the system board and the hard drive power connector to the hard drive backplane.

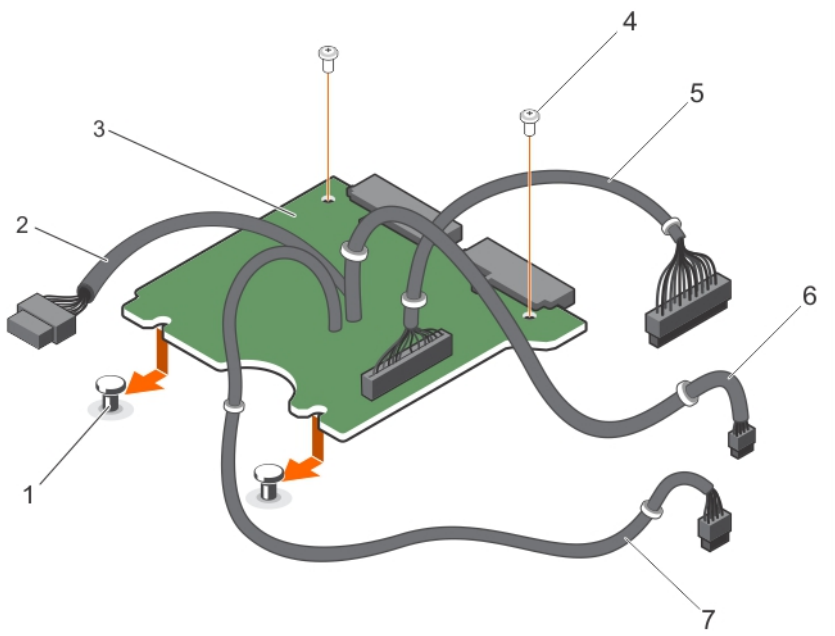

Figure 101. Installing the power interposer board

1. standoffs (2)
2. 10 pin cable to hard drive backplane
3. power interposer board
4. screw (2)
5. 28 pin cable to system board
6. 4 pin cable to system board
7. 8 pin cable to system board

Next steps

1. Install the power supply units.
2. Follow the procedure listed in After working inside your system.

Related tasks

Installing a redundant power supply unit

Trusted Platform Module

Trusted Platform Module (TPM) is a dedicated microprocessor designed to secure hardware by integrating cryptographic keys into devices. A software can use a Trusted Platform Module to authenticate hardware devices. As each TPM chip has a unique and secret RSA key burned in as it is produced, it can perform the platform authentication.

CAUTION: Do not attempt to remove the Trusted Platform Module (TPM) from the system board. After the TPM is installed, it is cryptographically bound to that specific system board. Any attempt to remove an installed TPM breaks the cryptographic binding, and it cannot be re-installed or installed on another system board.

NOTE: This is a Field Replaceable Unit (FRU). Removal and installation procedures must be performed only by Dell certified service technicians.

Installing the Trusted Platform Module

Prerequisites

CAUTION: Many repairs may only be done by a certified service technician. You should only perform troubleshooting and simple repairs as authorized in your product documentation, or as directed by the online or telephone service and support team. Damage due to servicing that is not authorized by Dell is not covered by your warranty. Read and follow the safety instructions that are shipped with your product.

NOTE: This is a Field Replaceable Unit (FRU). Removal and installation procedures should be performed only by Dell certified service technicians.

1. Follow the safety guidelines listed in the Safety instructions section.
2. Follow the procedure listed in the Before working inside your system section.

Steps

1. Locate the TPM connector on the system board.

   NOTE: To locate the TPM connector on the system board, see the System board connectors section.

2. Align the edge connectors on the TPM with the slot on the TPM connector.
3. Insert the TPM into the TPM connector such that the plastic rivet aligns with the slot on the system board.
4. Press the plastic rivet until the rivet snaps into place.

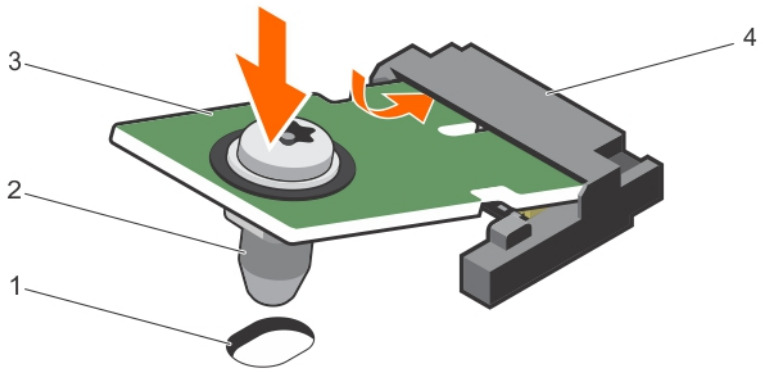

Figure 102. Installing the TPM

1. rivet slot on the system board
2. plastic rivet
3. TPM
4. TPM connector

Next steps

1. Install the system board.
2. Follow the procedure listed in the After working inside your system section.

Related tasks

Installing the system board

Initializing the TPM for BitLocker users

Steps

Initialize the TPM.

For more information about initializing the TPM, see http://technet.microsoft.com/en-us/library/cc753140.aspx.

The **TPM Status** changes to **Enabled, Activated**.

Initializing the TPM for TXT users

Steps

1. While booting your system, press F2 to enter System Setup.
2. On the **System Setup Main Menu** screen, click **System BIOS** > **System Security Settings**.
3. From the **TPM Security** option, select **On with Pre-boot Measurements**.
4. From the **TPM Command** option, select **Activate**.

5. Save the settings.
6. Restart your system.
7. Enter **System Setup** again.
8. On the **System Setup Main Menu** screen, click **System BIOS** > **System Security Settings**.
9. From the **Intel TXT** option, select **On**.

System board

A system board (also known as the motherboard) is the main printed circuit board found in systems. The system board allows communication between many of the crucial electronic components of the system, such as the central processing unit (CPU) and memory, and also provides connectors for other peripherals. Unlike a backplane, a system board contains a significant number of subsystems such as the processor, expansion cards, and other components.

Removing the system board

Prerequisites

CAUTION: Many repairs may only be done by a certified service technician. You should only perform troubleshooting and simple repairs as authorized in your product documentation, or as directed by the online or telephone service and support team. Damage due to servicing that is not authorized by Dell is not covered by your warranty. Read and follow the safety instructions that are shipped with your product.

NOTE: This is a Field Replaceable Unit (FRU). Removal and installation procedures must be performed only by Dell certified service technicians.

CAUTION: If you are using the Trusted Program Module (TPM) with an encryption key, you may be prompted to create a recovery key during program or System Setup. Be sure to create and safely store this recovery key. If you replace this system board, you must supply the recovery key when you restart your system or program before you can access the encrypted data on your hard drives.

CAUTION: Do not attempt to remove the TPM plug-in module from the system board. After the TPM plug-in module is installed, it is cryptographically bound to that specific system board. Any attempt to remove an installed TPM plug-in module breaks the cryptographic binding, and it cannot be re-installed or installed on another system board.

1. Follow the safety guidelines listed in Safety instructions section.
2. Keep the Phillips #2 screwdriver ready.
3. Follow the procedure listed in Before working inside your system.
4. Remove the following components:
   a. cooling shroud
   b. memory modules
   c. cooling fan cables
   d. expansion cards
   e. expansion card riser
   f. heat sink and processor
   g. iDRAC port card, if installed
   h. internal dual SD module, if installed

Steps

1. Disconnect all cables from the system board.

   CAUTION: Take care not to damage the system identification button while removing the system board from the chassis.
2. Remove the screws on the system board, and slide the system board toward the front of the chassis.
3. Hold the system board by the touch points and lift it out of the chassis.

   CAUTION: To prevent damage to the system board, do not lift the system board by holding a memory module, processor, or other components; hold the system board by its edges only.

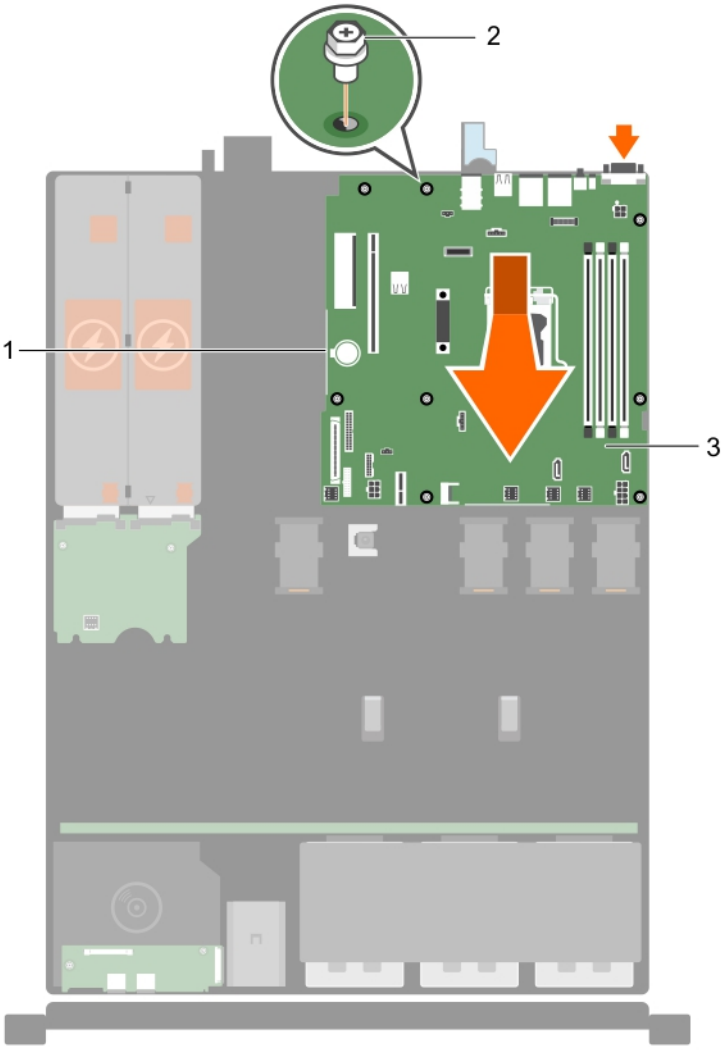

Figure 103. Removing the system board

a. touch point (2)
b. screw (8)
c. system board

Next steps

1. Install the system board.
2. Follow the procedure listed in the After working inside your system section.

Related tasks

Removing the cooling shroud
Removing a memory module
Removing a cooling fan
Removing an expansion card
Removing the expansion card riser
Removing the optional iDRAC port card
Removing the heat sink
Removing the processor
Removing the optional internal dual SD module

Installing the system board

Prerequisites

CAUTION: Many repairs may only be done by a certified service technician. You should only perform troubleshooting and simple repairs as authorized in your product documentation, or as directed by the online or telephone service and support team. Damage due to servicing that is not authorized by Dell is not covered by your warranty. Read and follow the safety instructions that are shipped with your product.

NOTE: This is a Field Replaceable Unit (FRU). Removal and installation procedures must be performed only by Dell certified service technicians.

CAUTION: Do not lift the system board by holding a memory module, processor, or other components.

CAUTION: Take care not to damage the system identification button while placing the system board into the chassis.

1. Follow the safety guidelines listed in Safety instructions section.
2. Follow the procedure listed in the Before working inside your system section.
3. Keep the Phillips #2 screwdriver ready.

Steps

1. Hold the system board by its edges, and orient it toward the back of the chassis.
2. Lower the system board into the chassis until the connectors at the back of the system board align with the slots on the back of the chassis.
3. Tighten the screws that secure the system board to the chassis.

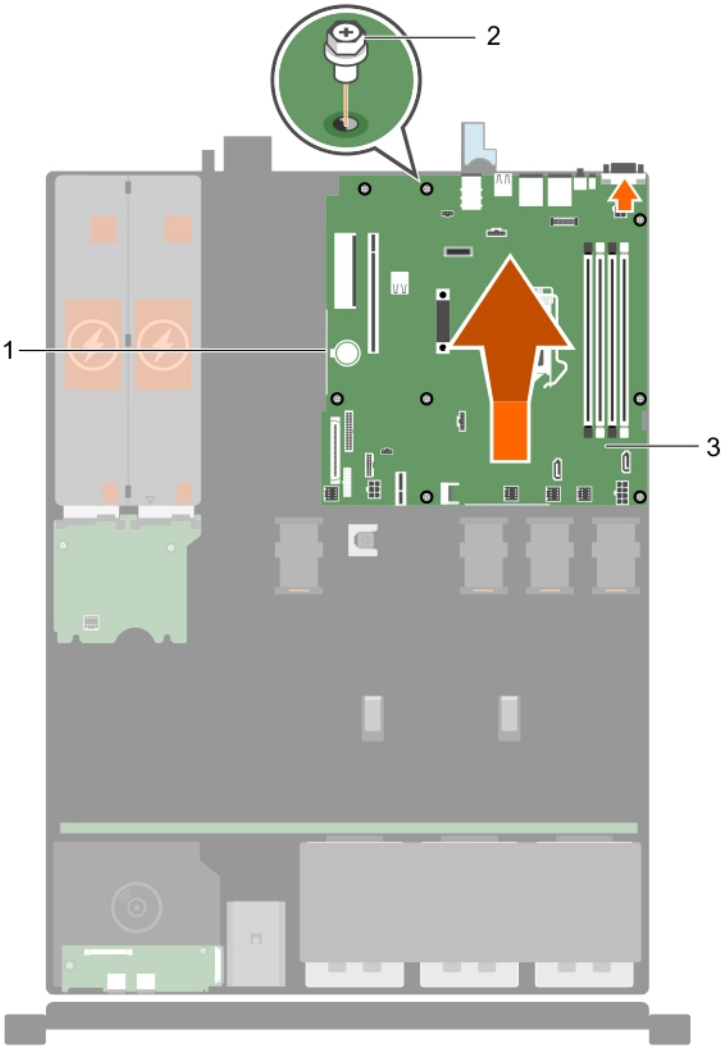

Figure 104. Install the system board

a. touch point (2)
b. screw (8)
c. system board

Next steps

1. If required, install the Trusted Platform Module (TPM). See, the Installing the Trusted Platform Module section.
2. Reinstall the following components:
   a. expansion card riser
   b. memory modules
   c. heat sink and processor
   d. cooling shroud
   e. iDRAC port card, if removed
   f. internal dual SD module, if removed
3. Reconnect all cables to the system board.

   NOTE: Ensure that the cables inside the system are routed through the cable routing latch.
4. Follow the procedure listed in the After working inside your system section.
5. Import your new or existing iDRAC Enterprise license. For more information, see the Integrated Dell Remote Access Controller User's Guide, at **Dell.com/idracmanuals**.

   NOTE: If you are using Easy Restore, you do not have to import an existing iDRAC Enterprise license.

6. Ensure that you perform the following steps:
   a. Use the Easy Restore feature to restore the service tag. See the Restoring the Service Tag by using the Easy Restore feature section.
   b. If the service tag is not backed up in the backup flash device, enter the system service tag manually. See the Entering the system service tag by using System Setup section.
   c. Update the BIOS and iDRAC versions.
   d. Re-enable the Trusted Platform Module (TPM). See the Re-enabling the TPM for BitLocker users section.

Related tasks

Installing the cooling shroud
Installing a memory module
Installing a cooling fan
Installing an expansion card
Installing the expansion card riser
Installing the optional iDRAC port card
Installing the heat sink
Installing the processor
Installing the Trusted Platform Module

Restoring the Service Tag by using the Easy Restore feature

By using the Easy Restore feature, you can restore your Service Tag, license, UEFI configuration, and the system configuration data after replacing the system board. All data is automatically backed up in a backup flash device. If BIOS detects a new system board and the Service Tag in the backup flash device, BIOS prompts the user to restore the backup information.

Steps

1. Turn on the system.
   If BIOS detects a new system board, and if the Service Tag is present in the backup flash device, BIOS displays the Service Tag, the status of the license, and the **UEFI Diagnostics** version.
2. Perform one of the following steps:
   After the restore process is complete, BIOS prompts to restore the system configuration data.
3. Perform one of the following steps:
   - Press **Y** to restore the system configuration data.
   - Press **N** to use the default configuration settings.

   After the restore process is complete, the system restarts.

Entering the system Service Tag by using System Setup

If Easy Restore fails to restore the Service Tag, use System Setup to enter the Service Tag.

Steps

1. Turn on the system.
2. Press F2 to enter System Setup.
3. Click **Service Tag Settings**.
4. Enter the Service Tag.

   NOTE: You can enter the Service Tag only when the Service Tag field is empty. Ensure that you enter the correct Service Tag. After the Service Tag is entered, it cannot be updated or changed.
5. Click **Ok**.
6. Import your new or existing iDRAC Enterprise license.
   For more information, see the *Integrated Dell Remote Access Controller User's Guide* at **Dell.com/idracmanuals**.

7

Using system diagnostics

If you experience a problem with your system, run the system diagnostics before contacting Dell for technical assistance. The purpose of running system diagnostics is to test your system hardware without using additional equipment or risking data loss. If you are unable to fix the problem yourself, service and support personnel can use the diagnostics results to help you solve the problem.

Topics:

- Dell Embedded System Diagnostics

Dell Embedded System Diagnostics

NOTE: The Dell Embedded System Diagnostics is also known as Enhanced Pre-boot System Assessment (ePSA) diagnostics.

The Embedded System Diagnostics provides a set of options for particular device groups or devices allowing you to:

- Run tests automatically or in an interactive mode
- Repeat tests
- Display or save test results
- Run thorough tests to introduce additional test options to provide extra information about the failed device(s)
- View status messages that inform you if tests are completed successfully
- View error messages that inform you of problems encountered during testing

When to use the Embedded System Diagnostics

Run the Embedded System Diagnostics (ePSA) if your system does not boot.

Running the Embedded System Diagnostics from Boot Manager

Prerequisites

Run the Embedded System Diagnostics (ePSA) if your system does not boot.

Steps

1. When the system is booting, press F10.
2. Use the up arrow and down arrow keys to select **System Utilities** > **Launch Diagnostics**.
   The ePSA Pre-boot System Assessment window is displayed, listing all devices detected in the system. The diagnostics starts executing the tests on all the detected devices.

Running the Embedded System Diagnostics from the Dell Lifecycle Controller

Steps

1. As the system boots, press F10.
2. Select **Hardware Diagnostics** → **Run Hardware Diagnostics**.
   The **ePSA Pre-boot System Assessment** window is displayed, listing all devices detected in the system. The diagnostics starts executing the tests on all the detected devices.

System diagnostic controls

Menu	Description
Configuration	Displays the configuration and status information of all detected devices.
Results	Displays the results of all tests that are run.
Systemhealth	Provides the current overview of the system performance.
Event log	Displays a time-stamped log of the results of all tests run on the system. This is displayed if at least one event description is recorded.

8

Jumpers and connectors

Topics:

- System board jumper settings
- System board connectors
- Disabling a forgotten password

System board jumper settings

CAUTION: Many repairs may only be done by a certified service technician. You should only perform troubleshooting and simple repairs as authorized in your product documentation, or as directed by the online or telephone service and support team. Damage due to servicing that is not authorized by Dell is not covered by your warranty. Read and follow the safety instructions that came with the product.

For information about resetting the password jumper to disable a password, see the Disabling A Forgotten Password section.

Table 27. System Board Jumper settings

Jumper	Setting	Description
PWRD_EN	(default)	The password feature is enabled (pins 1–2).
		The password feature is disabled (pins 2–3).
NVRAM_CLR	(default)	The configuration settings are retained at system boot (pins 2–3).
		The configuration settings are cleared at the next system boot. (pins 1–2).

System board connectors

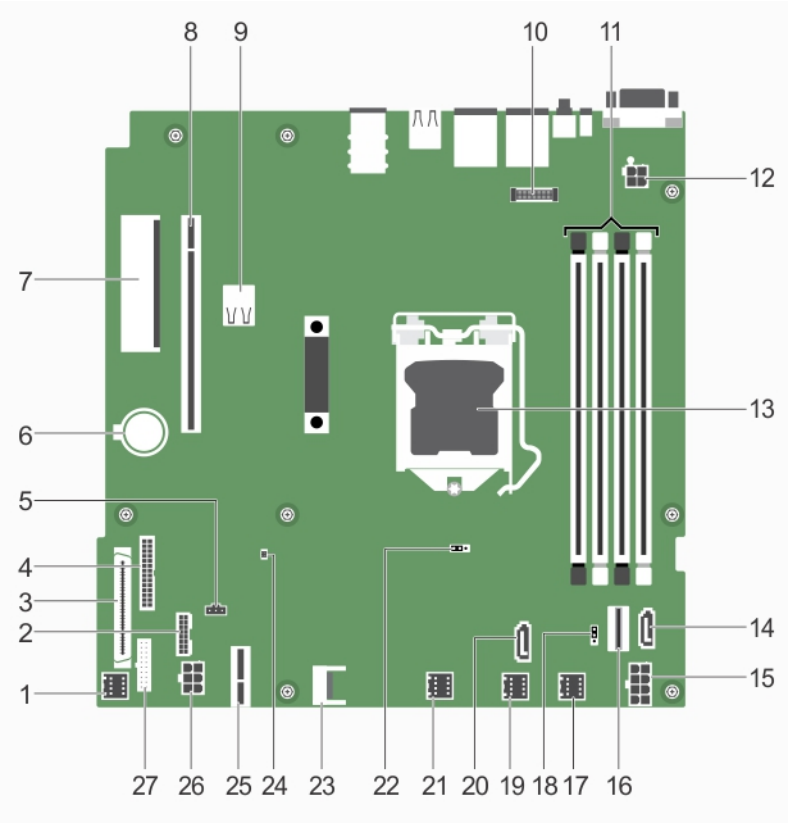

Figure 105. System board connectors

Table 28. System board connectors

Item	Connector	Description
1	FAN1	Cooling fan connector
2	BP_SIG	Backplane signal connector
3	CTRL_PNL	Control panel interface connector
4	PIB_CONN	Power connector
5	R_INTRUSION	Intrusion switch connector
6	BATTERY	Battery connector
7	PCIE_G3_X4	Internal PERC connector
8	PCIE_G3_X8	Riser card connector
9	INT_USB_3.0	Internal USB connector 3.0
10	AMEA	iDRAC port card connector
11	DIMMs	Memory module sockets
12	CPU_PWR	4–pin power connector
13	CPU	Processor socket
14	SATA_ODD/SSD	Optical drive/SSD SATA connector
15	SYS_PWR	8–pin power connector
16	SATA0-3	SATA connector
17	FAN4	Cooling fan connector

Item	Connector	Description
18	PWRD_EN	Password jumpers
19	FAN3	Cooling fan connector
20	J_SATA_2	SATA SSD connector
21	FAN2	Cooling fan connector
22	NVRAM_CLR	NVRAM password jumper
23	TPM	Trusted Platform Module connector
24	SAS_LED	PERC card LED connector
25	IDSDM	Internal dual SD module connector
26	HDD/ODD_PWR	6–pin power connector
27	FP_USB	Front panel USB connector

Disabling a forgotten password

The system's software security features include a system password and a setup password. The password jumper enables these password features or disables them and clears any password(s) currently in use.

Prerequisites

CAUTION: Many repairs may only be done by a certified service technician. You should only perform troubleshooting and simple repairs as authorized in your product documentation, or as directed by the online or telephone service and support team. Damage due to servicing that is not authorized by Dell is not covered by your warranty. Read and follow the safety instructions that are shipped with your product.

Steps

1. Turn off the system, including any attached peripherals, and disconnect the system from the electrical outlet.
2. Remove the system cover.
3. Move the jumper on the system board jumper from pins 2 and 3 to pins 1 and 2.
4. Install the system cover.

   The existing passwords are not disabled (erased) until the system boots with the jumper on pins 1 and 2. However, before you assign a new system and/or setup password, you must move the jumper back to pins 2 and 3.

   NOTE: If you assign a new system and/or setup password with the jumper on pins 1 and 2, the system disables the new password(s) the next time it boots.
5. Reconnect the system to its electrical outlet and turn on the system, including any attached peripherals.
6. Turn off the system, including any attached peripherals, and disconnect the system from the electrical outlet.
7. Remove the system cover.
8. Move the jumper on the system board jumper from pins 1 and 2 to pins 2 and 3.
9. Install the system cover.
10. Reconnect the system to its electrical outlet and turn on the system, including any attached peripherals.
11. Assign a new system or setup password.

9

Troubleshooting your system

Safety first — for you and your system

CAUTION: Many repairs may only be done by a certified service technician. You should only perform troubleshooting and simple repairs as authorized in your product documentation, or as directed by the online or telephone service and support team. Damage due to servicing that is not authorized by Dell is not covered by your warranty. Read and follow the safety instructions that are shipped with your product.

NOTE: Solution validation was performed by using the factory shipped hardware configuration.

Topics:

- Troubleshooting system startup failure
- Troubleshooting external connections
- Troubleshooting the video subsystem
- Troubleshooting a USB device
- Troubleshooting iDRAC Direct (USB XML configuration)
- Troubleshooting iDRAC Direct (Laptop connection)
- Troubleshooting a serial I/O device
- Troubleshooting a NIC
- Troubleshooting a wet system
- Troubleshooting a damaged system
- Troubleshooting the system battery
- Troubleshooting power supply units
- Troubleshooting cooling problems
- Troubleshooting cooling fans
- Troubleshooting system memory
- Troubleshooting an internal USB key
- Troubleshooting an SD card
- Troubleshooting an optical drive
- Troubleshooting a tape backup unit
- Troubleshooting a hard drive or SSD
- Troubleshooting a storage controller
- Troubleshooting expansion cards
- Troubleshooting processors

Troubleshooting system startup failure

If you boot the system to the BIOS boot mode after installing an operating system from the UEFI Boot Manager, the system stops responding. To avoid this issue, you must boot to the same boot mode in which you installed the operating system.

For all other startup issues, note the system messages that appear on the screen.

Troubleshooting external connections

Before troubleshooting any external devices, ensure that all external cables are securely attached to the external connectors on your system before troubleshooting any external devices.

Troubleshooting the video subsystem

Prerequisites

NOTE: Ensure the Local Server Video Enabled option is selected in the iDRAC Graphical User Interface (GUI), under Virtual Console. If this option is not selected, local video is disabled.

Steps

1. Check the cable connections (power and display) to the monitor.
2. Check the video interface cabling from the system to the monitor.
3. Run the appropriate diagnostic test.

Results

If the tests run successfully, the problem is not related to video hardware.

Next steps

If the tests fail, see the Getting help section.

Troubleshooting a USB device

Prerequisites

NOTE: Follow steps 1 to 5 to troubleshoot a USB keyboard or mouse. For other USB devices, go to step 6.

Steps

1. Disconnect the keyboard and/or mouse cables from the system and reconnect them.
2. If the problem persists, connect the keyboard and/or mouse to another USB port on the system.
3. If the problem is resolved, restart the system, enter System Setup, and check if the non-functioning USB ports are enabled.
4. In **iDRAC Settings Utility**, ensure that **USB Management Port Mode** is configured as **Automatic** or **Standard OS Use**.
5. If the problem is not resolved, replace the keyboard and/or mouse with a known working keyboard or mouse.

   If the problem is not resolved, proceed to step 6 to troubleshoot other USB devices attached to the system.

   If the problem is not resolved, proceed to troubleshoot other USB devices attached to the system.
6. Turn off all attached USB devices, and disconnect them from the system.
7. Restart the system.
8. If your keyboard is functioning, enter System Setup, verify that all USB ports are enabled on the **Integrated Devices** screen. If your keyboard is not functioning, use remote access to enable or disable the USB options.
9. If the system is not accessible, reset the NVRAM_CLR jumper inside your system and restore the BIOS to the default settings. See the System board jumper setting section
10. In the **IDRAC Settings Utility**, ensure that **USB Management Port Mode** is configured as **Automatic** or **Standard OS Use**.
11. Reconnect and turn on each USB device one at a time.
12. If a USB device causes the same problem, turn off the device, replace the USB cable with a known good cable, and turn on the device.

Next steps

If all troubleshooting fails, see the Getting help section.

Troubleshooting iDRAC Direct (USB XML configuration)

For information about USB storage device and system configuration, see *Integrated Dell Remote Access Controller User's Guide* at **Dell.com/idracmanuals**.

Steps

1. Ensure that your USB storage device is connected to the front USB Management Port, identified by icon.
2. Ensure that your USB storage device is configured with an NTFS or an FAT32 file system with only one partition.
3. Verify that the USB storage device is configured correctly. For more information about configuring the USB storage device, see *Integrated Dell Remote Access Controller User's Guide* at **Dell.com/idracmanuals**.
4. In the **iDRAC Settings Utility**, ensure that **USB Management Port Mode** is configured as **Automatic** or **iDRAC Direct Only**.
5. Ensure that the **iDRAC Managed: USB XML Configuration** option is either **Enabled** or **Enabled only when the server has default credential settings**.
6. Remove and reinsert the USB storage device.
7. If import operation does not work, try with a different USB storage device.

Next steps

If all troubleshooting fails, see the Getting help section.

Troubleshooting iDRAC Direct (Laptop connection)

For information about USB laptop connection and system configuration, see the *Integrated Dell Remote Access Controller User's Guide* at **Dell.com/idracmanuals**.

Steps

1. Ensure that your laptop is connected to the front USB Management Port, identified by icon with a USB Type A/A cable.
2. On the **iDRAC Settings Utility** screen, ensure that **USB Management Port Mode** is configured as **Automatic** or **iDRAC Direct Only**.
3. If the laptop is running Windows operating system, ensure that the iDRAC Virtual USB NIC device driver is installed.
4. If the driver is installed, ensure that you are not connected to any network through WiFi or cabled ethernet, as iDRAC Direct uses a non-routable address.

Next steps

If all troubleshooting fails, see the Getting help section.

Troubleshooting a serial I/O device

Prerequisites

Steps

1. Turn off the system and any peripheral devices connected to the serial port.
2. Swap the serial interface cable with a known working cable, and turn on the system and the serial device.

   If the problem is resolved, replace the interface cable with a known working cable.
3. Turn off the system and the serial device, and swap the serial device with a compatible device.
4. Turn on the system and the serial device.

Next steps

If the problem persists, see the Getting help section.

Troubleshooting a NIC

Steps

1. Run the appropriate diagnostic test. For more information, see the Using system diagnostics section for the available diagnostic tests.
2. Restart the system and check for any system messages pertaining to the NIC controller.
3. Check the appropriate indicator on the NIC connector:
   - If the link indicator does not glow, the cable connected might be disengaged.
   - If the activity indicator does not glow, the network driver files might be damaged or missing.

     Install or replace the drivers as necessary. For more information, see the NIC documentation.
   - Try another known good network cable.
   - If the problem persists, use another connector on the switch or hub.
4. Ensure that the appropriate drivers are installed and the protocols are bound. For more information, see the NIC documentation.
5. Enter System Setup and confirm that the NIC ports are enabled on the **Integrated Devices** screen.
6. Ensure that all the NICs, hubs, and switches on the network are set to the same data transmission speed and duplex. For more information, see the documentation for each network device.
7. Ensure that all the NICs and switches on the network are set to the same data transmission speed and duplex. For more information, see the documentation for each network device.
8. Ensure that all network cables are of the proper type and do not exceed the maximum length.

Next steps

If the problem persists, see the Getting help section.

Troubleshooting a wet system

Prerequisites

CAUTION: Many repairs may only be done by a certified service technician. You should only perform troubleshooting and simple repairs as authorized in your product documentation, or as directed by the online or telephone service and support team. Damage due to servicing that is not authorized by Dell is not covered by your warranty. Read and follow the safety instructions that are shipped with your product.

Steps

1. Turn off the system and attached peripherals, and disconnect the system from the electrical outlet.
2. Remove the system cover.
3. Remove the following components (if installed) from the system:
   - Power supply unit(s)
   - Optical drive
   - Hard drives
   - Hard drive backplane
   - USB memory key
   - Hard drive tray
   - Cooling shroud
   - Expansion card risers (if installed)
   - Expansion cards
   - Cooling fan assembly (if installed)
   - Cooling fan(s)
   - Memory modules
   - Processor(s) and heat sink(s)

- System board

4. Let the system dry thoroughly for at least 24 hours.
5. Reinstall the components you removed in step 3 except the expansion cards.
6. Install the system cover.
7. Turn on the system and attached peripherals.

   If the problem persists, see the Getting help section.
8. If the system starts properly, turn off the system, and reinstall all the expansion cards that you removed.
9. Run the appropriate diagnostic test. For more information, see the Using system diagnostics section.

Next steps

If the tests fail, see the Getting help section.

Troubleshooting a damaged system

Prerequisites

CAUTION: Many repairs may only be done by a certified service technician. You should only perform troubleshooting and simple repairs as authorized in your product documentation, or as directed by the online or telephone service and support team. Damage due to servicing that is not authorized by Dell is not covered by your warranty. Read and follow the safety instructions that are shipped with your product.

Steps

1. Turn off the system and attached peripherals, and disconnect the system from the electrical outlet.
2. Remove the system cover.
3. Ensure that the following components are properly installed:
   - cooling shroud
   - expansion card risers (if installed)
   - expansion cards
   - power supply unit(s)
   - cooling fan assembly (if installed)
   - cooling fan(s)
   - processor(s) and heat sink(s)
   - memory modules
   - hard drive carriers or cage
   - hard drive backplane
4. Ensure that all cables are properly connected.
5. Install the system cover.
6. Run the appropriate diagnostic test. For more information, see the Using system diagnostics section.

Next steps

If the problem persists, see the Getting help section.

Troubleshooting the system battery

Prerequisites

CAUTION: Many repairs may only be done by a certified service technician. You should only perform troubleshooting and simple repairs as authorized in your product documentation, or as directed by the online or telephone service and support team. Damage due to servicing that is not authorized by Dell is not covered by your warranty. Read and follow the safety instructions that are shipped with your product.

NOTE: If the system is turned off for long periods of time (for weeks or months), the NVRAM may lose the system configuration information. This situation is caused by a defective battery.

NOTE: Some software may cause the system time to speed up or slow down. If the system seems to operate normally except for the time set in System Setup, the problem may be caused by a software, rather than by a defective battery.

Steps

1. Re-enter the time and date in System Setup.
2. Turn off the system, and disconnect it from the electrical outlet for at least an hour.
3. Reconnect the system to the electrical outlet, and turn on the system.
4. Enter System Setup.

   If the date and time displayed in System Setup are not correct, check the System Error Log (SEL) for system battery messages.

Next steps

If the problem persists, see the Getting help section.

Troubleshooting power supply units

Prerequisites

CAUTION: Many repairs may only be done by a certified service technician. You should only perform troubleshooting and simple repairs as authorized in your product documentation, or as directed by the online or telephone service and support team. Damage due to servicing that is not authorized by Dell is not covered by your warranty. Read and follow the safety instructions that are shipped with your product.

The following sections provide information on troubleshooting power source and power supply units problems.

Troubleshooting power source problems

Steps

1. Press the power button to ensure that your system is turned on. If the power indicator does not glow when the power button is pressed, press the power button firmly.
2. Plug in another working power supply unit to ensure that the system board is not faulty.
3. Ensure that no loose connections exist.

   For example, loose power cables.
4. Ensure that the power source meets applicable standards.
5. Ensure that there are no short circuits.
6. Have a qualified electrician check the line voltage to ensure that it meets the needed specifications.

Power supply unit problems

Steps

1. Ensure that no loose connections exist.

   For example, loose power cables.
2. Ensure that the power supply unit (PSU) handle or LED indicates that the PSU is working properly.

   For more information about PSU indicators, see the Power indicator codes section.
3. If you have recently upgraded your system, ensure that the PSU has enough power to support the new system.
4. If you have a redundant PSU configuration, ensure that both the PSUs are of the same type and wattage.

   You may have to upgrade to a higher wattage PSU.
5. Ensure that you use only PSUs with the Extended Power Performance (EPP) label on the back.
6. Reseat the PSU.

NOTE: After installing a PSU, allow several seconds for the system to recognize the PSU and determine if it is working properly.

If the problem persists, see the Getting help section.

Troubleshooting cooling problems

CAUTION: Many repairs may only be done by a certified service technician. You should only perform troubleshooting and simple repairs as authorized in your product documentation, or as directed by the online or telephone service and support team. Damage due to servicing that is not authorized by Dell is not covered by your warranty. Read and follow the safety instructions that are shipped with your product.

Ensure that the following conditions exist:

- System cover, cooling shroud, EMI filler panel, or back-filler bracket is not removed.
- Ambient temperature is not higher than the specified ambient temperature.
- External airflow is not obstructed.
- A cooling fan is not removed or has not failed.
- The expansion card installation guidelines have been followed.

Additional cooling can be added by one of the following methods:

From the iDRAC Web GUI:

1. Click **Hardware** > **Fans** > **Setup**.
2. From the **Fan Speed Offset** drop-down list, select the cooling level needed or set the minimum fan speed to a custom value.

From F2 System Setup:

1. Select **iDRAC Settings** > **Thermal**, and set a higher fan speed from the fan speed offset or minimum fan speed.

From RACADM commands:

1. Run the command `racadm help system.thermalsettings`

For more information, see the Integrated Dell Remote Access Controller User's Guide at **Dell.com/idracmanuals**.

Troubleshooting cooling fans

Prerequisites

CAUTION: Many repairs may only be done by a certified service technician. You should only perform troubleshooting and simple repairs as authorized in your product documentation, or as directed by the online or telephone service and support team. Damage due to servicing that is not authorized by Dell is not covered by your warranty. Read and follow the safety instructions that are shipped with your product.

NOTE: The fan number is referenced by the management software of the system. In the event of a problem with a particular fan, you can easily identify and replace it by noting down the fan numbers on the cooling fan assembly.

1. Follow the safety guidelines listed in the Safety instructions section.
2. Follow the procedure listed in the Before working inside your system section.

Steps

1. Reseat the fan or the fan's power cable.
2. Restart the system.

Next steps

1. Follow the procedure listed in the After working inside your system section.
2. If the problem persists, see the Getting help section.

Troubleshooting system memory

Prerequisites

CAUTION: Many repairs may only be done by a certified service technician. You should only perform troubleshooting and simple repairs as authorized in your product documentation, or as directed by the online or telephone service and support team. Damage due to servicing that is not authorized by Dell is not covered by your warranty. Read and follow the safety instructions that are shipped with your product.

Steps

1. If the system is operational, run the appropriate diagnostic test. See the Using system diagnostics section for the available diagnostic tests.

   If the diagnostic tests indicate a fault, follow the corrective actions provided by the diagnostic tests.
2. If the system is not operational, turn off the system and attached peripherals, and unplug the system from the power source. Wait at least for 10 seconds, and then reconnect the system to the power source.
3. Turn on the system and attached peripherals, and note the messages on the screen.

   If an error message is displayed indicating a fault with a specific memory module, go to step 12.
4. Enter System Setup, and check the system memory setting. Make any changes to the memory settings, if needed.

   If the memory settings match the installed memory but the problem still persists, go to step 12.
5. Turn off the system and attached peripherals, and disconnect the system from the electrical outlet.
6. Remove the system cover.
7. Check the memory channels and ensure that they are populated correctly.

   NOTE: See the system event log or system messages for the location of the failed memory module. Reinstall the memory device.
8. Reseat the memory modules in their sockets.
9. Install the system cover.
10. Enter System Setup and check the system memory setting.

    If the problem is not resolved, proceed with step 11.
11. Remove the system cover.
12. If a diagnostic test or error message indicates a specific memory module as faulty, swap or replace the module with a known working memory module.
13. To troubleshoot an unspecified faulty memory module, replace the memory module in the first DIMM socket with a module of the same type and capacity.

    If an error message is displayed on the screen, this may indicate a problem with the installed DIMM type(s), incorrect DIMM installation, or defective DIMM(s). Follow the on-screen instructions to resolve the problem.
14. Install the system cover.
15. As the system boots, observe any error message that is displayed and the diagnostic indicators on the front of the system.
16. If the memory problem persists, repeat step 12 through step 15 for each memory module installed.

Next steps

If the problem persists, see the Getting help section.

Troubleshooting an internal USB key

Prerequisites

CAUTION: Many repairs may only be done by a certified service technician. You should only perform troubleshooting and simple repairs as authorized in your product documentation, or as directed by the online or telephone service and support team. Damage due to servicing that is not authorized by Dell is not covered by your warranty. Read and follow the safety instructions that are shipped with your product.

Steps

1. Enter System Setup and ensure that the **USB key port** is enabled on the **Integrated Devices** screen.
2. Turn off the system and attached peripherals, and disconnect the system from the electrical outlet.
3. Remove the system cover.
4. Locate the USB key and reseat it.
5. Install the system cover.
6. Turn on the system and attached peripherals, and check if the USB key is functioning.
7. If the problem is not resolved, repeat step 2 and step 3.
8. Insert a known working USB key.
9. Install the system cover.

Next steps

If the problem persists, see the Getting help section.

Troubleshooting an SD card

Prerequisites

CAUTION: Many repairs may only be done by a certified service technician. You should only perform troubleshooting and simple repairs as authorized in your product documentation, or as directed by the online or telephone service and support team. Damage due to servicing that is not authorized by Dell is not covered by your warranty. Read and follow the safety instructions that are shipped with your product.

NOTE: Certain SD cards have a physical write-protect switch on the card. If the write-protect switch is turned on, the SD card is not writable.

Steps

1. Enter System Setup, and ensure that the **Internal SD Card Port** is enabled.
2. Turn off the system, including any attached peripherals, and disconnect the system from the electrical outlet.
3. Remove the system cover.

   NOTE: When an SD card failure occurs, the internal dual SD module controller notifies the system. On the next restart, the system displayed a message indicating the failure. If redundancy is enabled at the time of SD card failure, a critical alert will be logged and chassis health will degrade.
4. Replace the failed SD card with a new SD card.
5. Install the system cover.
6. Reconnect the system to its electrical outlet and turn on the system, including any attached peripherals.
7. Enter System Setup, and ensure that the **Internal SD Card Port** and **Internal SD Card Redundancy** modes are set to the needed modes.

   Verify that the correct SD slot is set as **Primary SD Card**.
8. Check if the SD card is functioning properly.
9. If the **Internal SD Card Redundancy** option is set to **Enabled** at the time of the SD card failure, the system prompts you to perform a rebuild.

   NOTE: The rebuild is always sourced from the primary SD card to the secondary SD card.

Troubleshooting an optical drive

Prerequisites

CAUTION: Many repairs may only be done by a certified service technician. You should only perform troubleshooting and simple repairs as authorized in your product documentation, or as directed by the online or telephone service and

support team. Damage due to servicing that is not authorized by Dell is not covered by your warranty. Read and follow the safety instructions that are shipped with your product.

Steps

1. Try using a different CD or DVD.
2. If the problem is not resolved, enter System Setup and ensure that the integrated SATA controller and the drive's SATA port are enabled.
3. Run the appropriate diagnostic test.
4. Turn off the system and attached peripherals, and disconnect the system from the electrical outlet.
5. If installed, remove the bezel.
6. Remove the system cover.
7. Ensure that the interface cable is securely connected to the optical drive and to the controller.
8. Ensure that a power cable is properly connected to the drive.
9. Install the system cover.

Next steps

If the problem persists, see the Getting help section.

Troubleshooting a tape backup unit

Prerequisites

CAUTION: Many repairs may only be done by a certified service technician. You should only perform troubleshooting and simple repairs as authorized in your product documentation, or as directed by the online or telephone service and support team. Damage due to servicing that is not authorized by Dell is not covered by your warranty. Read and follow the safety instructions that are shipped with your product.

Steps

1. Use a different tape cartridge.
2. Ensure that the device drivers for the tape backup unit are installed and are configured correctly. See your tape drive documentation for more information about device drivers.
3. Reinstall the tape-backup software as instructed in the tape-backup software documentation.
4. Ensure that the interface cable of the tape drive is connected to the external port on the controller card.
5. Perform the following steps to ensure that the controller card is properly installed:
   a) Turn off the system and attached peripherals, and disconnect the system from the electrical outlet.
   b) Remove the system cover.
   c) Reseat the controller card in the expansion card slot.
   d) Install the system cover.
   e) Turn on the system and attached peripherals.
6. Run the appropriate diagnostic test. For more information, see the Using system diagnostics.

Next steps

If you cannot resolve the problem, see the Getting help section.

Troubleshooting a hard drive or SSD

Prerequisites

CAUTION: This troubleshooting procedure can erase data stored on the hard drive. Before you proceed, back up all files on the hard drive.

CAUTION: Many repairs may only be done by a certified service technician. You should only perform troubleshooting and simple repairs as authorized in your product documentation, or as directed by the online or telephone service and support team. Damage due to servicing that is not authorized by Dell is not covered by your warranty. Read and follow the safety instructions that are shipped with your product.

Steps

1. Run the appropriate diagnostic test. See the Using system diagnostics section.

   Depending on the results of the diagnostics test, proceed as required through the following steps.
2. If your system has a RAID controller and your hard drives are configured in a RAID array, perform the following steps:
   a) Restart the system and press F10 during system startup to run the Dell Lifecycle Controller, and then run the Hardware Configuration wizard to check the RAID configuration.

      See the Dell Lifecycle Controller documentation or online help for information about RAID configuration.
   b) Ensure that the hard drives are configured correctly for the RAID array.
   c) Take the hard drive offline and reseat the drive.
   d) Exit the configuration utility and allow the system to boot to the operating system.
3. Ensure that the needed device drivers for your controller card are installed and are configured correctly. For more information, see the operating system documentation.
4. Restart the system and enter the System Setup.
5. Verify that the controller is enabled and the drives are displayed in the System Setup.

Next steps

If the problem persists, see the Getting help section.

Troubleshooting a storage controller

CAUTION: Many repairs may only be done by a certified service technician. You should only perform troubleshooting and simple repairs as authorized in your product documentation, or as directed by the online or telephone service and support team. Damage due to servicing that is not authorized by Dell is not covered by your warranty. Read and follow the safety instructions that are shipped with your product.

NOTE: When troubleshooting a controller, see the documentation for your operating system and the controller.

1. Run the appropriate diagnostic test. See the Using system diagnostics section.
2. Turn off the system and attached peripherals, and disconnect the system from the electrical outlet.
3. Remove the system cover.
4. Verify that the installed expansion cards are compliant with the expansion card installation guidelines.
5. Ensure that each expansion card is firmly seated in its connector.
6. Install the system cover.
7. Reconnect the system to the electrical outlet, and turn on the system and attached peripherals.
8. If the problem is not resolved, turn off the system and attached peripherals, and disconnect the system from the electrical outlet.
9. Remove the system cover.
10. Remove all expansion cards installed in the system.
11. Install the system cover.
12. Reconnect the system to the electrical outlet, and turn on the system and attached peripherals.
13. Run the appropriate diagnostic test. See the Using system diagnostics section. If the tests fail, see the Getting help section.
14. For each expansion card you removed in step 10, perform the following steps:
    a. Turn off the system and attached peripherals, and disconnect the system from the electrical outlet.
    b. Remove the system cover.
    c. Reinstall one of the expansion cards.
    d. Install the system cover.
    e. Run the appropriate diagnostic test. See the Using system diagnostics section.

If the problem persists, see the Getting help section.

Troubleshooting expansion cards

Prerequisites

CAUTION: Many repairs may only be done by a certified service technician. You should only perform troubleshooting and simple repairs as authorized in your product documentation, or as directed by the online or telephone service and support team. Damage due to servicing that is not authorized by Dell is not covered by your warranty. Read and follow the safety instructions that are shipped with your product.

NOTE: When troubleshooting an expansion card, you also have to see the documentation for your operating system and the expansion card.

Steps

1. Run the appropriate diagnostic test. See the Using system diagnostics section.
2. Turn off the system and attached peripherals, and disconnect the system from the electrical outlet.
3. Remove the system cover.
4. Ensure that each expansion card is firmly seated in its connector.
5. Install the system cover.
6. Turn on the system and attached peripherals.
7. If the problem is not resolved, turn off the system and attached peripherals, and disconnect the system from the electrical outlet.
8. Remove the system cover.
9. Remove all expansion cards installed in the system.
10. Install the system cover.
11. Run the appropriate diagnostic test. See the Using system diagnostics section.

    If the tests fail, see the Getting help section.
12. For each expansion card you removed in step 8, perform the following steps:
    a) Turn off the system and attached peripherals, and disconnect the system from the electrical outlet.
    b) Remove the system cover.
    c) Reinstall one of the expansion cards.
    d) Install the system cover.
    e) Run the appropriate diagnostic test. See the Using system diagnostics section.

Next steps

If the problem persists, see the Getting help section.

Troubleshooting processors

Prerequisites

CAUTION: Many repairs may only be done by a certified service technician. You should only perform troubleshooting and simple repairs as authorized in your product documentation, or as directed by the online or telephone service and support team. Damage due to servicing that is not authorized by Dell is not covered by your warranty. Read and follow the safety instructions that are shipped with your product.

Steps

1. Run the appropriate diagnostics test. See the Using system diagnostics section.
2. Turn off the system and attached peripherals, and disconnect the system from the electrical outlet.
3. Remove the system cover.
4. Ensure that the processor and heat sink are properly installed.
5. Install the system cover.
6. Run the appropriate diagnostic test. See the Using system diagnostics section.
7. If the problem persists, see the Getting help section.

10

Getting help

Topics:

- Contacting Dell
- Documentation feedback
- Accessing system information by using QRL

Contacting Dell

Dell provides several online and telephone based support and service options. If you do not have an active internet connection, you can find contact information about your purchase invoice, packing slip, bill, or Dell product catalog. Availability varies by country and product, and some services may not be available in your area. To contact Dell for sales, technical assistance, or customer service issues:

Steps

1. Go to Dell.com/support.
2. Select your country from the drop-down menu on the lower right corner of the page.
3. For customized support:
   a) Enter your system Service Tag in the **Enter your Service Tag** field.
   b) Click **Submit**.
   The support page that lists the various support categories is displayed.
4. For general support:
   a) Select your product category.
   b) Select your product segment.
   c) Select your product.
   The support page that lists the various support categories is displayed.
5. For contact details of Dell Global Technical Support:
   a) Click Global Technical Support.
   b) The Contact Technical Support page is displayed with details to call, chat, or e-mail the Dell Global Technical Support team.

Documentation feedback

Click the **Feedback** link in any of the Dell documentation pages, fill out the form, and click **Submit** to send your feedback.

Accessing system information by using QRL

You can use the Quick Resource Locator (QRL) to get immediate access to the information about your system.

Prerequisites

Ensure that your smartphone or tablet has the QR code scanner installed.

About this task

The QRL includes the following information about your system:

- How-to videos
- Reference materials, including the Owner's Manual, LCD diagnostics, and mechanical overview
- Your system service tag to quickly access your specific hardware configuration and warranty information
- A direct link to Dell to contact technical support and sales teams

Steps

1. Go to **Dell.com/QRL** and navigate to your specific product or
2. Use your smartphone or tablet to scan the model-specific Quick Resource (QR) code located in the following image or on your Dell PowerEdge system: