X99-WS/IPMI

Motherboard

E10151
Revised Edition v2
March 2015

Copyright© 2015 ASUSTeK COMPUTER INC. All Rights Reserved.

No part of this manual, including the products and software described in it, may be reproduced, transmitted, transcribed, stored in a retrieval system, or translated into any language in any form or by any means, except documentation kept by the purchaser for backup purposes, without the express written permission of ASUSTeK COMPUTER INC. (“ASUS”).

Product warranty or service will not be extended if: (1) the product is repaired, modified or altered, unless such repair, modification of alteration is authorized in writing by ASUS; or (2) the serial number of the product is defaced or missing.

ASUS PROVIDES THIS MANUAL “AS IS” WITHOUT WARRANTY OF ANY KIND, EITHER EXPRESS OR IMPLIED, INCLUDING BUT NOT LIMITED TO THE IMPLIED WARRANTIES OR CONDITIONS OF MERCHANTABILITY OR FITNESS FOR A PARTICULAR PURPOSE. IN NO EVENT SHALL ASUS, ITS DIRECTORS, OFFICERS, EMPLOYEES OR AGENTS BE LIABLE FOR ANY INDIRECT, SPECIAL, INCIDENTAL, OR CONSEQUENTIAL DAMAGES (INCLUDING DAMAGES FOR LOSS OF PROFITS, LOSS OF BUSINESS, LOSS OF USE OR DATA, INTERRUPTION OF BUSINESS AND THE LIKE), EVEN IF ASUS HAS BEEN ADVISED OF THE POSSIBILITY OF SUCH DAMAGES ARISING FROM ANY DEFECT OR ERROR IN THIS MANUAL OR PRODUCT.

SPECIFICATIONS AND INFORMATION CONTAINED IN THIS MANUAL ARE FURNISHED FOR INFORMATIONAL USE ONLY, AND ARE SUBJECT TO CHANGE AT ANY TIME WITHOUT NOTICE, AND SHOULD NOT BE CONSTRUED AS A COMMITMENT BY ASUS. ASUS ASSUMES NO RESPONSIBILITY OR LIABILITY FOR ANY ERRORS OR INACCURACIES THAT MAY APPEAR IN THIS MANUAL, INCLUDING THE PRODUCTS AND SOFTWARE DESCRIBED IN IT.

Products and corporate names appearing in this manual may or may not be registered trademarks or copyrights of their respective companies, and are used only for identification or explanation and to the owners’ benefit, without intent to infringe.

Offer to Provide Source Code of Certain Software

This product contains copyrighted software that is licensed under the General Public License (“GPL”), under the Lesser General Public License Version (“LGPL”) and/or other Free Open Source Software Licenses. Such software in this product is distributed without any warranty to the extent permitted by the applicable law. Copies of these licenses are included in this product.

Where the applicable license entitles you to the source code of such software and/or other additional data, you may obtain it for a period of three years after our last shipment of the product, either

(1) for free by downloading it from http://support.asus.com/download

or

(2) for the cost of reproduction and shipment, which is dependent on the preferred carrier and the location where you want to have it shipped to, by sending a request to:

ASUSTeK Computer Inc.

Legal Compliance Dept.

15 Li Te Rd.,

Beitou, Taipei 112

Taiwan

In your request please provide the name, model number and version, as stated in the About Box of the product for which you wish to obtain the corresponding source code and your contact details so that we can coordinate the terms and cost of shipment with you.

The source code will be distributed WITHOUT ANY WARRANTY and licensed under the same license as the corresponding binary/object code.

This offer is valid to anyone in receipt of this information.

ASUSTeK is eager to duly provide complete source code as required under various Free Open Source Software licenses. If however you encounter any problems in obtaining the full corresponding source code we would be much obliged if you give us a notification to the email address gpl@asus.com, stating the product and describing the problem (please DO NOT send large attachments such as source code archives, etc. to this email address).

Contents

Safety information ..... **vi**
About this guide ..... **vii**
X99-WS/IPMI specifications summary ..... **ix**
Package contents ..... **xiii**
Installation tools and components ..... **xiv**

Chapter 1: Product Introduction

1.1 Special features **1-1**
1.1.1 Product highlights 1-1
1.1.2 Other special features 1-2
1.2 Motherboard overview **1-3**
1.2.1 Before you proceed 1-3
1.2.2 Motherboard layout 1-4
1.2.3 Central Processing Unit (CPU) 1-6
1.2.4 System memory 1-7
1.2.5 Expansion slots 1-9
1.2.6 Onboard buttons and switches 1-12
1.2.7 Jumpers 1-18
1.2.8 Onboard LEDs 1-22
1.2.9 Internal connectors 1-30

Chapter 2: Basic installation

2.1 Building your PC system **2-1**
2.1.1 Motherboard installation 2-1
2.1.2 CPU installation 2-3
2.1.3 CPU heatsink and fan assembly installation 2-4
2.1.4 DIMM installation 2-6
2.1.5 ATX Power connection 2-7
2.1.6 SATA device connection 2-8
2.1.7 Front I/O Connector 2-9
2.1.8 Expansion Card installation 2-10
2.2 BIOS update utility **2-11**
2.3 Q-Code Logger utility **2-12**
2.3.1 Using the Q-Code Logger 2-12
2.4 Motherboard rear and audio connection **2-13**
2.4.1 Rear I/O connection 2-13
2.4.2 Audio I/O connection 2-15
2.5 Starting up for the first time **2-17**
2.6 Turning off the computer **2-18**

Chapter 3: BIOS setup

3.1 Knowing BIOS 3-1

3.2 BIOS setup program 3-2

3.2.1 Advanced Mode 3-3

3.2.2 EZ Tuning Wizard 3-6

3.3 My Favorites 3-8

3.4 Main menu 3-10

3.5 Ai Tweaker menu 3-12

3.6 Advanced menu 3-29

3.6.1 CPU Configuration 3-30

3.6.2 PCH Configuration 3-33

3.6.3 PCH Storage Configuration 3-34

3.6.4 System Agent Configuration 3-36

3.6.5 USB Configuration 3-38

3.6.6 Platform Misc Configuration 3-40

3.6.7 Onboard Devices Configuration 3-41

3.6.8 APM Configuration 3-43

3.6.9 Network Stack Configuration 3-44

3.7 Monitor menu 3-45

3.8 Boot menu 3-47

3.9 Tool menu 3-53

3.9.1 ASUS EZ Flash 2 Utility 3-53

3.9.2 ASUS O.C. Profile 3-54

3.9.3 ASUS SPD Information 3-55

3.10 Exit menu 3-56

3.11 Server Management menu 3-57

3.11.1 System Event Log 3-58

3.11.2 BMC Network configuration 3-59

3.11.3 View System Event Log 3-60

3.12 Updating BIOS 3-61

3.12.1 EZ Update 3-61

3.12.2 ASUS EZ Flash 2 3-61

3.12.3 ASUS CrashFree BIOS 3 3-63

Chapter 4: Software support

4.1 Installing an operating system 4-1

4.2 Support DVD information 4-1

4.2.1 Running the support DVD 4-1

4.2.2 Obtaining the software manuals 4-3

4.3 Software information 4-4
4.4 ASUS Utilities 4-4
4.4.1 Ai Charger+ 4-6
4.4.2 USB Charger+ 4-7
4.4.3 ASUS Dr. Power Utility 4-8
4.5 Audio configurations 4-10

Chapter 5: RAID support

5.1 RAID configurations 5-1
5.1.1 RAID definitions 5-1
5.1.2 Installing Serial ATA hard disks 5-2
5.1.3 Setting the RAID item in BIOS 5-2
5.1.4 Intel® Rapid Storage Technology Option ROM utility 5-3
5.2 Creating a RAID driver disk 5-7
5.2.1 Creating a RAID driver disk without entering the OS 5-7
5.2.2 Creating a RAID driver disk in Windows® 5-8
5.2.3 Installing the RAID driver during Windows® OS installation 5-8

Chapter 6: Multi GPU support

6.1 AMD® CrossFireX™ technology 6-1
6.1.1 Requirements 6-1
6.1.2 Before you begin 6-1
6.1.3 Installing two CrossFireX™ graphics cards 6-2
6.1.4 Installing three CrossFireX™ graphics cards 6-3
6.1.5 Installing the device drivers 6-4
6.1.6 Enabling the AMD® CrossFireX™ technology 6-4
6.2 NVIDIA® SLI™ technology 6-6
6.2.1 Requirements 6-6
6.2.2 Installing two SLI-ready graphics cards 6-6
6.2.3 Installing three SLI-ready graphics cards 6-7
6.2.4 Installing the device drivers 6-8
6.2.5 Enabling the NVIDIA® SLI™ technology 6-8

Appendices

Notices A-1
ASUS contact information A-5

Safety information

Electrical safety

- To prevent electrical shock hazard, disconnect the power cable from the electrical outlet before relocating the system.
- When adding or removing devices to or from the system, ensure that the power cables for the devices are unplugged before the signal cables are connected. If possible, disconnect all power cables from the existing system before you add a device.
- Before connecting or removing signal cables from the motherboard, ensure that all power cables are unplugged.
- Seek professional assistance before using an adapter or extension cord. These devices could interrupt the grounding circuit.
- Ensure that your power supply is set to the correct voltage in your area. If you are not sure about the voltage of the electrical outlet you are using, contact your local power company.
- If the power supply is broken, do not try to fix it by yourself. Contact a qualified service technician or your retailer.

Operation safety

- Before installing the motherboard and adding devices on it, carefully read all the manuals that came with the package.
- Before using the product, ensure all cables are correctly connected and the power cables are not damaged. If you detect any damage, contact your dealer immediately.
- To avoid short circuits, keep paper clips, screws, and staples away from connectors, slots, sockets and circuitry.
- Avoid dust, humidity, and temperature extremes. Do not place the product in any area where it may become wet.
- Place the product on a stable surface.
- If you encounter technical problems with the product, contact a qualified service technician or your retailer.

About this guide

This user guide contains the information you need when installing and configuring the motherboard.

How this guide is organized

This guide contains the following parts:

1. **Chapter 1: Product introduction**

   This chapter describes the features of the motherboard and the new technology it supports. It includes description of the switches, jumpers, and connectors on the motherboard.

2. **Chapter 2: Basic installation**

   This chapter lists the hardware setup procedures that you have to perform when installing system components.

3. **Chapter 3: BIOS setup**

   This chapter tells how to change system settings through the BIOS Setup menus. Detailed descriptions of the BIOS parameters are also provided.

4. **Chapter 4: Software support**

   This chapter describes the contents of the support DVD that comes with the motherboard package and the software.

5. **Chapter 5: RAID support**

   This chapter describes the RAID configurations.

6. **Chapter 6: Multi GPU support**

   This chapter describes how to install and configure multiple AMD® CrossFire™ and NVIDIA® SLI™ graphics cards.

Where to find more information

Refer to the following sources for additional information and for product and software updates.

1. **ASUS website**

   The ASUS website (www.asus.com) provides updated information on ASUS hardware and software products.

2. **Optional documentation**

   Your product package may include optional documentation, such as warranty flyers, that may have been added by your dealer. These documents are not part of the standard package.

Conventions used in this guide

To ensure that you perform certain tasks properly, take note of the following symbols used throughout this manual.

DANGER/WARNING: Information to prevent injury to yourself when trying to complete a task.

CAUTION: Information to prevent damage to the components when trying to complete a task

IMPORTANT: Instructions that you MUST follow to complete a task.

NOTE: Tips and additional information to help you complete a task.

Typography

Bold text	Indicates a menu or an item to select.
Italics	Used to emphasize a word or a phrase.
<Key>	Keys enclosed in the less-than and greater-than sign means that you must press the enclosed key. Example: <Enter> means that you must press the Enter or Return key.
<Key1> + <Key2> + <Key3>	If you must press two or more keys simultaneously, the key names are linked with a plus sign (+).

X99-WS/IPMI specifications summary

CPU	LGA2011-v3 socket for the Next Generation Intel® Core™ i7/Xeon® E5-2600/1600 v3 processors Supports 22nm CPU Supports Intel® Turbo Boost Technology 2.0* *** The Intel® Turbo Boost Technology 2.0 support depends on the CPU types.**
Chipset	Intel® X99 Express Chipset
Memory	8 x DIMM DDR4 max at 128 GB 3200 (O.C.)* / 2800 (O.C.)* / 2666 (O.C.)* / 2400 (O.C.)* / 2133 MHz, non-ECC unbuffered memory (When installing Intel® Socket 2011-v3 Core™ i7 processors) 8 x DIMM DDR4 max at 128 GB 2133 / 1866 MHz, ECC unbuffered, Register memory (When installing Intel® Xeon™ E5-1600 v3 / 2600 v3 processors) Quad channel memory architecture Supports Intel® Extreme Memory Profile (XMP) *** Hyper DIMM support is subject to the physical characteristics of individual CPUs. Refer to www.asus.com for the memory QVL (Qualified Vendors Lists).**
Expansion slots	**40-LANE CPU** 5 x PCI Express 3.0/2.0 x16 slots (single at x16, dual at x16/x16, triple at x16/x16/x8, quintuple at x8/x8/x8/x8/x8 mode) **28-LANE CPU** 5 x PCI Express 3.0/2.0 x16 slots (single at x16, dual at x16/x8, quad at x8/x8/x8/x4 mode)* *** The PCIe 3.0/2.0 x16_4 slot will not work if you install a 28-LANE CPU.**
Multi-GPU support	Supports AMD® Quad-GPU CrossFireX™ Technology Supports NVIDIA® 3-Way SLI™ Technology* *** Supports up to 2-WAY SLI™ when installing 28-LANE processor.**
Storage	**Intel® X99 Express Chipset with RAID 0, 1, 5, 10 and Intel® Rapid Storage Technology 13 support** - 8 x SATA 6.0 Gb/s ports (4 x right angle connectors from controller 1, 4 x vertical connectors from controller 2) - 1 x SATA Express port (gray at bottom, compatible with 2 x SATA 6.0 Gb/s ports) - 1 x M.2 Socket 3 with M Key, 2260/2280 storage devices support (SATA/PCIE mode)* *** M.2 Socket shares bandwidth with SATAExpress.**
LAN	2 x Intel® I210-AT Gigabit LAN controllers 1 x Management LAN
Audio	Realtek® ALC1150 8-channel high definition audio CODEC featuring Crystal Sound 2 - Separate layer for left and right track, ensuring both sound deliver equal quality - Audio shielding ensures precision analog/digital separation and greatly reduced multi-lateral interference

(continued on the next page)

X99-WS/IPMI specifications summary

Audio	- Audio amplifier to enhance the highest quality sound for headphone and speakers - High quality 109 dB SNR stereo playback output (Line-out at back) and 104 dB SNR recording input (Line-in) support - Absolute Pitch 192khz/24bit True BD Lossless Sound - DTS UltraPC II - DTS Connect - Supports jack-detection, multi-streaming and front panel jack-retasking (MIC) - Optical S/PDIF out ports at rear I/O
USB	**Intel® X99 Express Chipset** - 6 x USB 3.0/2.0 (4 ports at front panel, 2 ports at rear panel) - 6 x USB 2.0/1.1 ports (4 ports at mid-board, 2 ports at back panel) **ASMedia® USB 3.0 controllers** - 2 x USB 3.0/2.0 ports at rear panel (blue)
ASUS Exclusive Features	**High Performance** **DIGI+ Power Control** CPU Power - Industry leading digital 8-phase power design DRAM Power - Industry leading digital 4-phase DRAM power design **TPU** - TPU, 2-level TPU switch **EPU** - EPU, EPU switch **UEFI BIOS** - Most advanced options with fast response time **M.2 and SATA Express onboard** - The latest transfer technology with up to 10 Gb/s data transfer speeds for M.2 - The ultra-fast transfer technology with up to 10 Gb/s data transfer speeds for SATA Express **Gaming Scenario** **Turbo LAN** - Experience smooth online gaming with lower pings and less lags **Crystal Sound 2** - Feel the sound power with different usage scenarios **Steam support** - Compatible with the most fun gaming platform under Windows® system

(continued on the next page)

X99-WS/IPMI specifications summary

ASUS Exclusive Features	**ASUS EZ DIY** **Push Notice** - Monitor your PC status with smart devices in real time **UEFI BIOS EZ Mode** - featuring friendly graphics user interface - ASUS O.C. Tuner - ASUS CrashFree BIOS 3 - ASUS EZ Flash 2 **Q-Design** - ASUS Q-Code - ASUS Q-Shield - ASUS Q-LED (CPU, DRAM, VGA, Boot Device LED) - ASUS Q-Slot - ASUS Q-DIMM
Rear Panel I/O Ports	1 x BIOS Flashback button 1 x Q-Code Logger button 4 x USB 3.0/2.0 ports (blue) 2 x USB 2.0 ports (1 port supports USB BIOS Flashback, 1 port supports Q-Code Logger) 1 x Optical S/PDIF Out port 2 x Intel® LAN (RJ45) ports 1 x Management port 8-channel Audio I/O jacks
ASUS Special Features	**Special features:** USB Charger+ Ai Charger+ Disk Unlocker MemOK! EZ XMP
Worksation Exclusive	5 PCIe x16 slots 12K hours capacitors ProCool Power connector Q-Code Logger ASUS Dr. Power
Internal I/O Connectors	2 x 19-pin USB 3.0/2.0 connectors support additional 4 USB ports 2 x USB 2.0/1.1 connectors support additional 4 USB ports 1 x M.2 Socket 3 (for M Key, type 2260/2280 devices) 1 x SATA Express connector (gray) 8 x SATA 6.0 Gb/s connectors (4 x gray, 4 x black) 1 x 4-pin CPU Fan connector for both 3-pin (DC Mode) and 4-pin (PWM Mode) CPU coolers control with auto detection support 1 x 4-pin CPU OPT Fan connector

(continued on the next page)

X99-WS/IPMI specifications summary

Internal I/O Connectors	4 x 4-pin Chassis Fan connectors for both 3-pin (DC Mode) and 4-pin (PWM Mode) fan control 1 x Front panel audio connector(AAFP) 1 x S/PDIF Out header 1 x TPM connector 1 x 24-pin EATX Power connector 2 x 8-pin EATX 12V Power connectors 1 x 6-pin EATX 12V_1 Power connector 1 x MemOK! button 1 x Clear CMOS button 1 x 3-pin Chassis intrusion (CHASSIS) connector 1 x DRCT (DirectKey) connector 1 x Dr. Power switch 1 x TPU switch (advanced two-stage adjustments) 1 x EPU switch 1 x EZ XMP switch 1 x Power-on button 1 x Reset button 1 x System Panel 1 x AUX panel header 1 x SMBus headers
BIOS features	128 Mb Flash ROM, UEFI AMI BIOS, PnP, DMI 2.7, WfM 2.0, SM BIOS 2.7, ACPI 5.0, Multi-language BIOS, ASUS EZ Flash 2, CrashFree BIOS 3, F11 EZ Tuning Wizard, F3 My Favorites, Quick Note, Last Modified Log, F12 PrintScreen function, F3 Shortcut function, and ASUS DRAM SPD (Serial Presence Detect) memory information
Manageability	WfM 2.0, DMI 2.7, WOL by PME, PXE
Support DVD	Drivers Anti-virus software (OEM version)
Form Factors	ATX Form Factor, 12 in. x 10 in. (30.5 cm x 25.4 cm) EEB Mounting hole locations

Specifications are subject to change without notice.

Package contents

Check your motherboard package for the following items

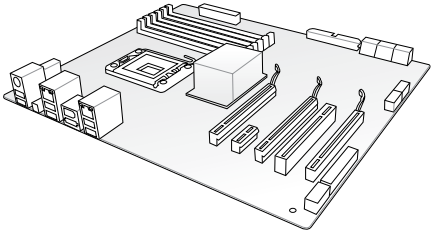

ASUS X99-WS/IPMI motherboard

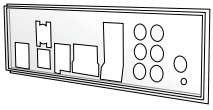

1 x ASUS Q-Shield

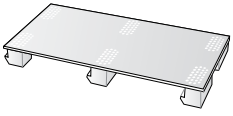

1 x 3-WAY SLI bridge connector

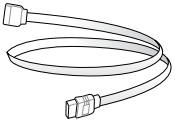

10 x Serial ATA 6 Gb/s cables

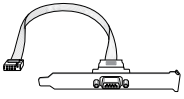

COM port bracket

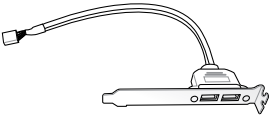

1 x USB 2.0 module

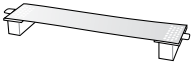

1 x ASUS SLI™ bridge connector

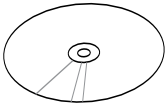

Support DVD

User Guide

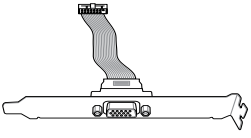

1 x VGA bracket cable

- If any of the above items is damaged or missing, contact your retailer.
- The illustrated items above are for reference only. Actual product specifications may vary with different models.

Installation tools and components

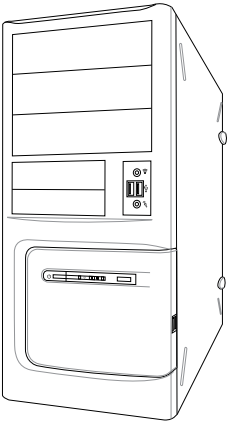

PC chassis

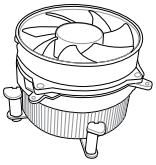

Intel® LGA2011-v3 compatible CPU Fan

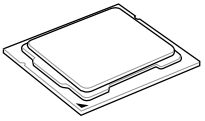

Intel® LGA2011-v3 CPU

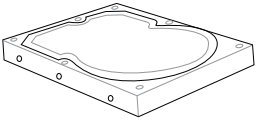

SATA hard disk drive

Philips (cross) screwdriver

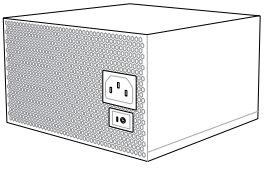

Power supply unit

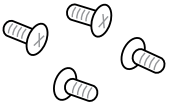

1 bag of screws

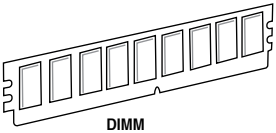

DIMM

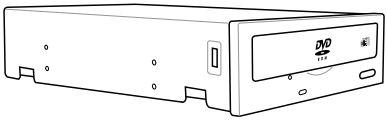

SATA optical disc drive (optional)

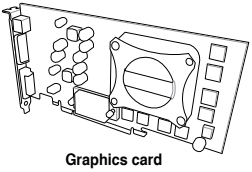

Graphics card

The tools and components in the table above are not included in the motherboard package.

Product introduction

1

1.1 Special features

1.1.1 Product highlights

LGA2011-v3 socket for Intel® Core™ i7 processors

This motherboard supports Intel® Core™ i7 processors in the LGA2011-v3 package. It provides great system performance, quad-channel DDR4 memory slots and PCI Express 2.0/3.0 expansion slots.

Intel® X99 Express Chipset

Intel® X99 Express Chipset is a single chipset that supports the LGA2011-v3 socket for Intel® Core™ i7 processors. It utilizes the serial point-to-point links, which increases bandwidth and enhances the system's performance. It natively supports up to six (6) USB 3.0 ports and ten (10) SATA 6 Gb/s ports.

PCI Express® 3.0

PCI Express® 3.0 (PCIe 3.0) is the PCI Express bus standard that provides twice the performance and speed of PCIe 2.0. It provides an optimal graphics performance, unprecedented data speed and seamless transition with its complete backward compatibility to PCIe 1.0/2.0 devices.

3-WAY SLI and Quad GPU CrossFireX™ Support

This motherboad features NVIDIA 3-WAY and Quad GPU AMD CrossfireX support that enables mulit-GPU setup, giving you the full power of the latest graphics technologies. It also features native support for 4K/UHD (ultra high definition) resolution of up to 4096 x 2160 via HDMI or DisplayPort, resulting to four times the number of pixels for incredible visual clarity, detail, and realism.

SATA Express support

SATA Express provides faster data transfer speeds of up to 10 Gb/s, allowing your system to catch up with the speed of the SSDs. It also features backward compatibility with up to two SATA drives of the same speed.

Quad-Channel DDR4 2133 MHz Support

The motherboard supports the quad-channel DDR4 memory that features data transfer rates of DDR4 2133 MHz to boost the system's performance, and to meet the higher bandwidth requirements of 3D graphics, multimedia and Internet applications.

M.2 Support*

This motherboard features the M.2 slot, which shares bandwidth with SATA Express port to speed up data transfer up to 10 Gb/s. This helps enhance the performance of your SSD (Solid State Drive) that is dedicated only to the operating system.

* **Supports PCIe/SATA mode.**

Complete USB 3.0 integration

This motherboard offers you the strategic USB 3.0 accessibility for both the front and rear panels, allowing you to experience the convenience of the latest plug and play connectivity solution at speed up to ten times faster than USB 2.0.

1.1.2 Other special features

DTS Connect

To get the most out of your audio entertainment across all formats and quality levels, DTS Connect combines two enabling technologies, DTS Neo:PC™ upmixes stereo sources (CDs, MP3s, WMAs, internet radio) into as many as 7.1 channels of incredible surround sound. Consumers can connect their PC to a home theater system. DTS Interactive is capable of performing mult-channel encoding of DTS bitstreams on personal computers, and sending encoded bitstreams out of a digital audio connection (such as S/PDIF or HDMI) designed to deliver audio to an external decoder.

DTS UltraPC II

DTS UltraPC II delivers a superior surround sound experience through your system's speakers and headphones while monitoring and balancing the loudness level difference between digital audio formats. It also ehnances the audio settings through augmenting low and high frequencies of musical tones, restores compressed or re-mastered sounds, improves bass performance even without a subwoofer, and improves dialogues derived from DVD or Blu-ray Disc™.

1.2 Motherboard overview

1.2.1 Before you proceed

Take note of the following precautions before you install motherboard components or change any motherboard settings.

- Unplug the power cord from the wall socket before touching any component.
- Before handling components, use a grounded wrist strap or touch a safely grounded object or a metal object, such as the power supply case, to avoid damaging them due to static electricity.
- Hold components by the edges to avoid touching the ICs on them.
- Whenever you uninstall any component, place it on a grounded antistatic pad or in the bag that came with the component.
- Before you install or remove any component, ensure that the ATX power supply is switched off or the power cord is detached from the power supply. Failure to do so may cause severe damage to the motherboard, peripherals, or components.

1.2.2 Motherboard layout

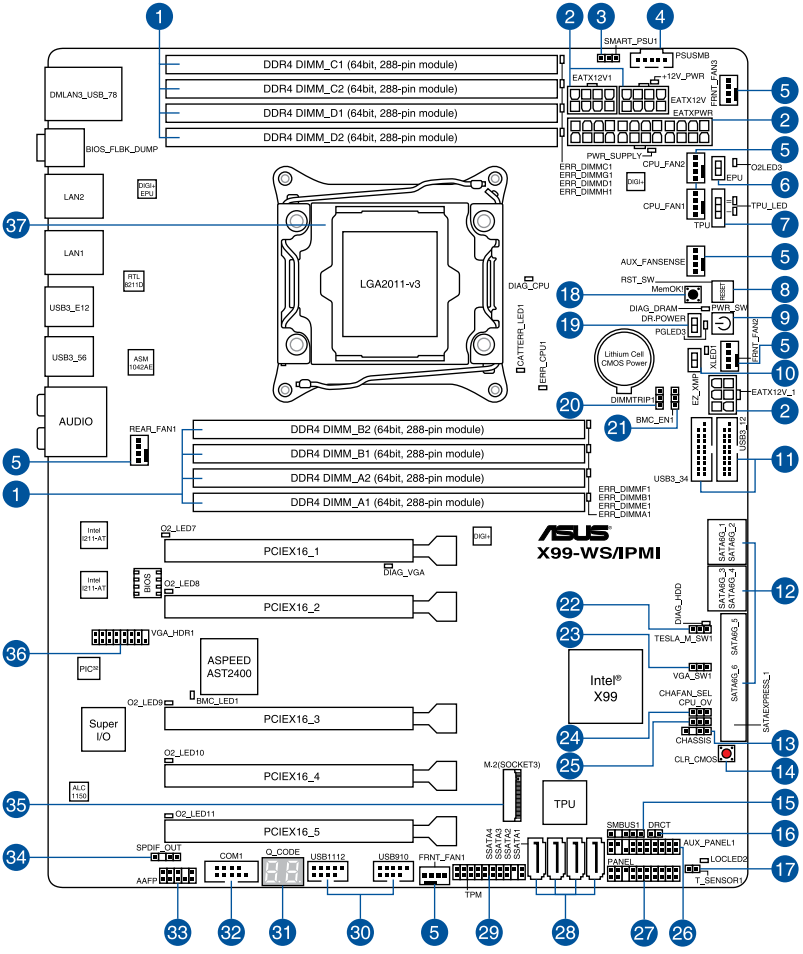

Refer to **1.2.9 Internal connectors** and **2.4.1 Rear I/O connection** for more information about rear panel connectors and internal connectors.

Chapter 1

Layout contents

Connectors/Jumpers/Buttons and switches/Slots	Page
1. DDR4 DIMM slots	1-7
2. ATX power connectors (24-pin EATXPWR; 8-pin EATX12V; 8-pin EATX12V1; 6-pin EATX12V_1)	1-37
3. PMBus 1.2 PSU select jumper (3-pin SMART_PSU1)	1-20
4. Power supply PSUSMB Connector (5-pin PSUSMB1)	1-21
5. CPU, CPU optional, auxiliary, and chassis fan connectors (4-pin CPU_FAN1-2, 4-pin REAR_FAN1, 4-pin FRNT_FAN1-3, 4-pin AUX_FANSENSE)	1-36
6. EPU switch	1-15
7. TPU switch	1-14
8. Reset button	1-12
9. Power-on button	1-12
10. EZ XMP switch	1-17
11. USB 3.0 connectors (20-1 pin USB3_12, USB3_34)	1-34
12. Intel® Serial ATA 6 Gb/s connectors (7-pin SATA6G_12, SATA 6G_34, SATA 6G_5, SATA 6G_6, SATAEXPRESS_1)	1-31
13. Chassis intrusion connector (4-1 pin CHASSIS)	1-41
14. Clear CMOS button (CLR_CMOS)	1-16
15. System Management Bus (SMBUS) connector (5-1 pin SMBUS1)	1-33
16. DirectKey connector (2-pin DRCT)	1-39
17. T_Sensor connector (T_SENSOR1)	1-40
18. MemOK! button	1-13
19. Dr. Power switch (DR_POWER)	1-16
20. DDR4 thermal event setting (3-pin DIMMTRIP1)	1-19
21. Baseboard Management Controller jumper (3-pin BMC_EN1)	1-21
22. SMBUS connection setting jumper (3-pin TESLA_M_SW)	1-19
23. VGA controller setting jumper (VGA_SW1)	1-20
24. Chassis Fan control setting jumper (3-pin CHAFAN_SEL)	1-18
25. CPU Over Voltage jumper (3-pin CPU_OV)	1-18
26. Auxiliary panel connector (20-2 pin AUX_PANEL1)	1-42
27. System panel connector (20-1 pin PANEL)	1-38
28. Serial ATA 3.0 Gb/s connectors (7-pin SSATA_1-4 [gray])	1-32
29. TPM connector (20-1 pin TPM)	1-39
30. USB 2.0 connectors (10-1 pin USB910; US1112)	1-35
31. Q-Code LEDs	1-26
32. Serial port connector (10-1 pin COM1)	1-30
33. Front panel audio connector (10-1 pin AAFP)	1-33
34. Digital audio connector (4-1 pin SPDIF_OUT)	1-30
35. M.2 Socket 3 connector	1-40
36. VGA connector (VGA_HDR1)	1-32
37. LGA2011-v3 CPU socket	1-6

(Continued on the next page)

1.2.3 Central Processing Unit (CPU)

The motherboard comes with a surface mount LGA2011-v3 socket designed for Intel® Core™ i7 processors.

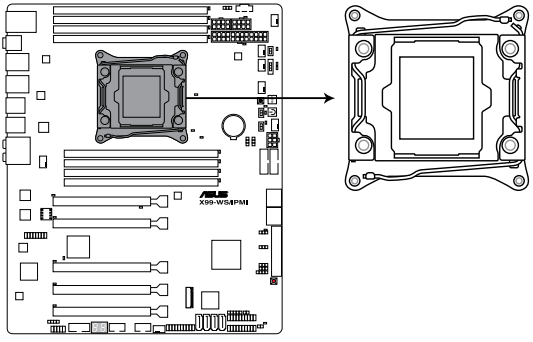

X99-WS/IPMI CPU LGA2011-v3 Socket

- Ensure that all power cables are unplugged before installing the CPU.
- Upon purchase of the motherboard, ensure that the PnP cap is on the socket and the socket contacts are not bent. Contact your retailer immediately if the PnP cap is missing, or if you see any damage to the PnP cap/socket contacts/motherboard components. ASUS will shoulder the cost of repair only if the damage is shipment/transit-related.
- Keep the cap after installing the motherboard. ASUS will process Return Merchandise Authorization (RMA) requests only if the motherboard comes with the cap on the LGA2011-v3 socket.
- The product warranty does not cover damage to the socket contacts resulting from incorrect CPU installation/removal, or misplacement/loss/incorrect removal of the PnP cap.

1.2.4 System memory

The motherboard comes with eight DDR 4 (Double Data Rate 4) Quad Inline Memory Modules (DIMM) slots.

A DDR4 module is notched differently from a DDR, DDR2, or DDR3 module. DO NOT install a DDR, DDR2, or DDR3 memory module to the DDR4 slot.

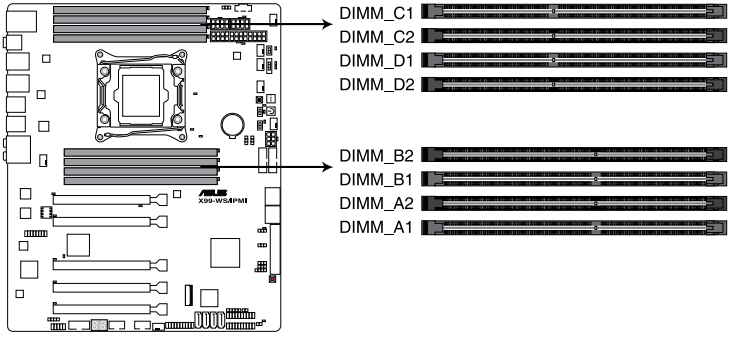

X99-WS/IPMI 288-pin DDR4 DIMM socket

Recommended memory configurations

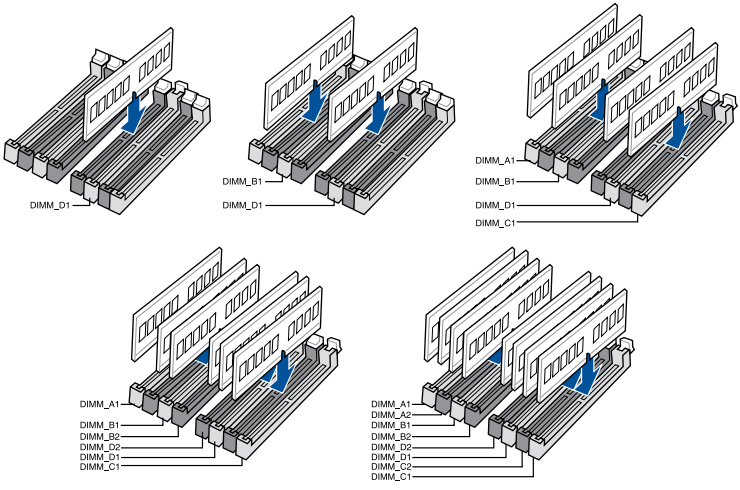

Chapter 1

Memory configurations

You may install 2 GB, 4 GB and 8 GB unbuffered and non-ECC DDR4 DIMMs into the DIMM sockets.

- You may install varying memory sizes in Channel A, Channel B, Channel C, and Channel D. The system maps the total size of the lower-sized channel for the dual-channel configuration. Any excess memory from the higher-sized channel is then mapped for single-channel operation.
- According to Intel® CPU spec, DIMM voltage below 1.65 V is recommended to protect the CPU.
- Due to the memory address limitation on 32-bit Windows® OS, when you install 4GB or more memory on the motherboard, the actual usable memory for the OS can be about 3GB or less. For effective use of memory, we recommend that you do any of the following:
  a) Use a maximum of 3GB system memory if you are using a 32-bit Windows® OS.
  b) Install a 64-bit Windows® OS when you want to install 4 GB or more on the motherboard.
  c) For more details, refer to the Microsoft® support site at http://support.microsoft.com/kb/929605/en-us.

- The default memory operation frequency is dependent on its Serial Presence Detect (SPD), which is the standard way of accessing information from a memory module. Under the default state, some memory modules for overclocking may operate at a lower frequency than the vendor-marked value. To operate at the vendor-marked or at a higher frequency, refer to section **3.5 Ai Tweaker menu** for manual memory frequency adjustment.
- For system stability, use a more efficient memory cooling system to support a full memory load (8 DIMMs) or overclocking condition.
- Memory modules with memory frequency higher than 2133MHz and their corresponding timing or the loaded XMP profile is not the JEDEC memory standard. The stability and compatibility of the memory modules depend on the CPU's capabilities and other installed devices.
- Always install the DIMMS with the same CAS Latency. For an optimum compatibility, we recommend that you install memory modules of the same version or data code (D/C) from the same vendor. Check with the vendor to get the correct memory modules.
- ASUS exclusively provides hyper DIMM support function.
- Hyper DIMM support is subject to the physical characteristics of individual CPUs. Load the X.M.P. or D.O.C.P. settings in the BIOS for the hyper DIMM support.
- Visit the ASUS website for the latest QVL.

1.2.5 Expansion slots

Unplug the power cord before adding or removing expansion cards. Failure to do so may cause you physical injury and damage motherboard components.

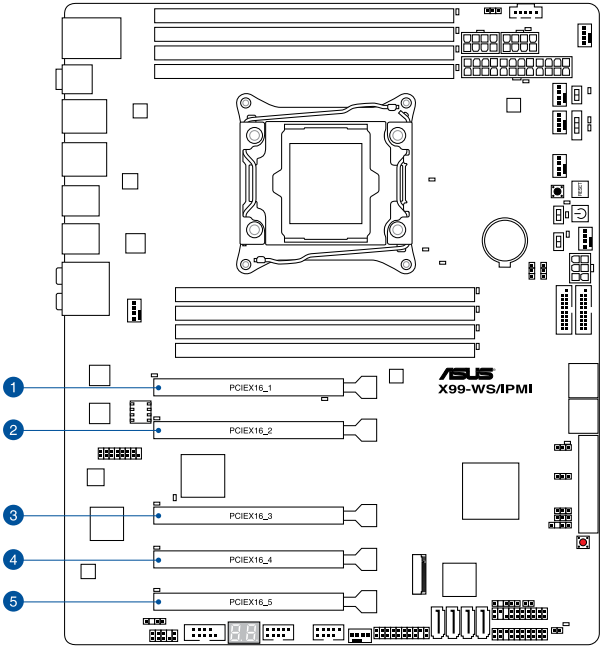

Slot No.	Slot Description	
	40-LANE	28-LANE
1	PCIe 3.0/2.0 x16_1 slot	PCIe 3.0/2.0 x16_1 slot
2	PCIe 3.0/2.0 x16_2 slot	PCIe 3.0/2.0 x16_2 slot
3	PCIe 3.0/2.0 x16_3 slot	PCIe 3.0/2.0 x16_3 slot
4	PCIe 3.0/2.0 x16_4 slot	PCIe 3.0/2.0 x16_4 slot*
5	PCIe 3.0/2.0 x16_5 slot	PCIe 3.0/2.0 x16_5 slot

*This slot may not work if a 28-LANE CPU is installed.

Chapter 1

40-LANE CPU VGA configuration

40-LANE CPU VGA configuration	PCI Express 3.0 operating mode				
	PCIe 3.0/2.0 x16_1	PCIe 3.0/2.0 x16_2	PCIe 3.0/2.0 x16_3	PCIe 3.0/2.0 x16_4	PCIe 3.0/2.0 x16_5
Single VGA/PCIe card	N/A	x16	N/A	N/A	N/A
Dual VGA/PCIe cards	N/A	x16	x16	N/A	N/A
Triple VGA/PCIe cards	N/A	x16	x16	N/A	x8
Quintuple VGA/ PCIe cards	x8	x8	x8	x8	x8

28-LANE CPU VGA configuration

28-LANE CPU VGA configuration	PCI Express 3.0 operating mode				
	PCIe 3.0/2.0 x16_1	PCIe 3.0/2.0 x16_2	PCIe 3.0/2.0 x16_3	PCIe 3.0/2.0 x16_4	PCIe 3.0/2.0 x16_5
Single VGA/PCIe card	N/A	x16	N/A	N/A	N/A
Dual VGA/PCIe cards	N/A	x16	x8	N/A	N/A
Quintuple VGA/ PCIe cards	x8	x8	x8	N/A	x4

- We recommend that you provide sufficient power when running CrossFireX™ or SLI™ mode.
- Connect a chassis fan to the motherboard connector labeled REAR_FAN1 or FRNT_ FAN1-3 when using multiple graphics cards for better thermal environment.

IRQ assignments for this motherboard

	A	B	C	D	E	F	G	H
PCIe x16_1	shared	–	–	–	–	–	–	–
PCIe x16_2	shared	–	–	–	–	–	–	–
PCIe x16_3	shared	–	–	–	–	–	–	–
PCIe x16_4	shared	–	–	–	–	–	–	–
PCIe x16_5	shared	–	–		–	–	–	–
SMBUS Controller	–	–	shared	–	–	–	–	–
Intel® SATA Controller 1	–	shared	–	–	–	–	–	–
Intel® SATA Controller 2	shared	–	–	–	–	–	–	–
Intel® LAN1 (i210)	–	–	shared	–	–	–	–	–
Intel® LAN2 (i210)	–	–	–	shared	–	–	–	–
Intel® xHCI	–	–	–	–	–	–	–	shared
Intel® EHCI 1	–	–	–	–	–	shared	–	–
Intel® EHCI 2	–	–	shared	–	–	–	–	–
HD Audio	–	–	–	–	–	–	shared	–
ASMedia Controller (1042AE)	–	–	shared	–	–	–	–	–
AST2400 VGA	shared	–	–	–	–	–	–	–

1.2.6 Onboard buttons and switches

Onboard buttons and switches allow you to fine-tune performance when working on a bare or open-case system. This is ideal for overclockers and gamers who continually change settings to enhance system performance.

1. Power-on button

The motherboard comes with a power-on button that allows you to power up or wake up the system. The button also lights up when the system is plugged to a power source indicating that you should shut down the system and unplug the power cable before removing or installing any motherboard component.

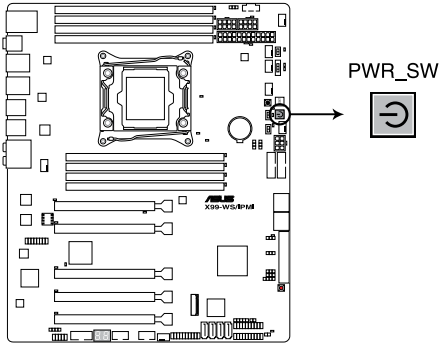

X99-WS/IPMI Power on button

2. Reset button

Press the reset button to reboot the system.

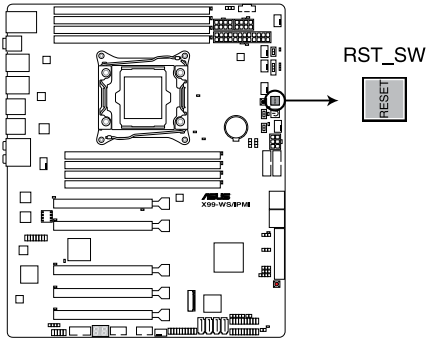

X99-WS/IPMI Reset button

Chapter 1

3. **MemOK! button**

Installing DIMMs that are not compatible with the motherboard may cause system boot failure, and the DIAG_DRAM LED near the MemOK! button lights continuously. Press and hold the MemOK! button until the DIAG_DRAM LED starts blinking to begin automatic memory compatibility tuning for successful boot.

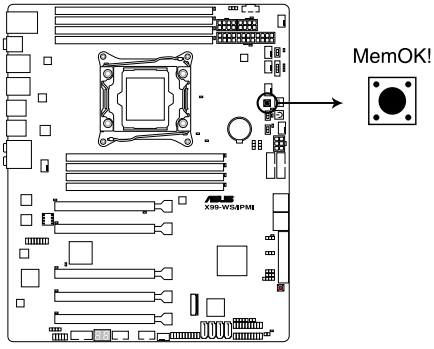

X99-WS/IPMI MemOK! button

- Refer to section **1.2.8 Onboard LEDs** for the exact location of the DIAG_DRAM LED.
- The DIAG_DRAM LED also lights up when the DIMM is not properly installed. Turn off the system and reinstall the DIMM before using the MemOK! function.
- The MemOK! button does not function under Windows® OS environment.
- During the tuning process, the system loads and tests failsafe memory settings. It takes about 30 seconds for the system to test one set of failsafe settings. If the test fails, the system reboots and test the next set of failsafe settings. The blinking speed of the DIAG_DRAM LED increases, indicating different test processes.
- Due to memory tuning requirement, the system automatically reboots when each timing set is tested. If the installed DIMMs still fail to boot after the whole tuning process, the DIAG_DRAM LED lights continuously. Replace the DIMMs with ones recommended in the Memory QVL (Qualified Vendors Lists) in this user manual or at www.asus.com.
- If you turn off the computer and replace DIMMs during the tuning process, the system continues memory tuning after turning on the computer. To stop memory tuning, turn off the computer and unplug the power cord for about 5–10 seconds.
- If your system fails to boot up due to BIOS overclocking, press the MemOK! button to boot and load the BIOS default settings. A message will appear during POST reminding you that the BIOS has been restored to its default settings.
- We recommend that you download and update to the latest BIOS version from www.asus.com after using the MemOK! function.

4. TPU switch

With its two-level adjustment functions, the TPU allows you to automatically adjusts the CPU ratio and clock speed for an optimal system performance.

- Enable this switch when the system is powered off.
- When the TPU switch is set to Enabled (TPU_I: CPU Ratio Boost), the system automatically adjusts the CPU ratio for an enhanced performance.
- When the TPU switch is set to Enabled (TPU_II: CPU BCLK and Ratio Boost), the system automatically adjusts the base clock rate (BLCK) and the CPU ratio for a more enhanced performance.

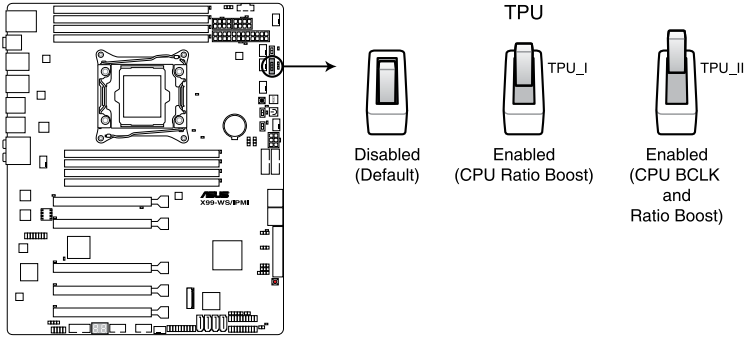

X99-WS/IPMI TPU switch

- The TPU LEDs (TPU_LED) near the TPU switch light up when you set the TPU switch to TPU_I mode or TPU_II mode. Refer to section **1.2.8 Onboard LEDs** for the exact location of the TPU LEDs.
- If you enable this switch under Windows® OS environment, the TPU function will be activated after the next system bootup.

Chapter 1

5. **EPU switch**

Enable this switch to automatically detect the current PC loadings and intelligently moderate the power consumption.

Enable this switch when the system is powered off.

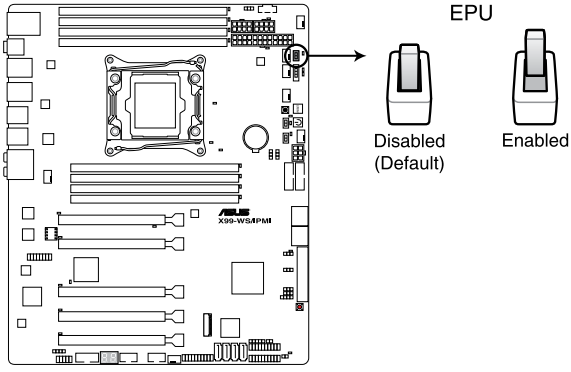

X99-WS/IPMI EPU switch

- The EPU LED (O2LED3) near the EPU switch lights up when you enable the EPU switch. Refer to section **1.2.8 Onboard LEDs** for the exact location of the EPU LED.
- If you enable this switch under Windows® OS environment, the EPU function will be activated after the next system bootup.
- You may change the EPU settings in BIOS setup program and enable the EPU function at the same time. However, the system will use the last setting you have made.

Chapter 1

6. **Clear CMOS button (CLR_CMOS)**

Press this button to clear the BIOS setup information only when the systems hangs due to overclocking.

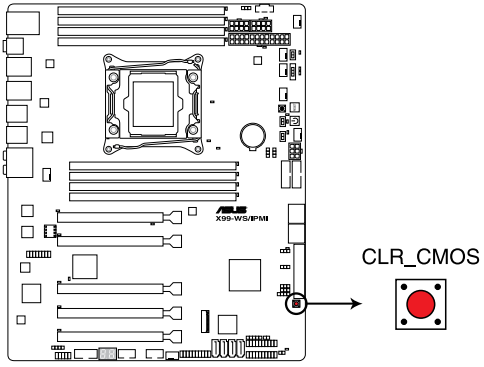

X99-WS/IPMI CLR_CMOS button

7. **Dr. Power switch (DR_POWER)**

This switch allows you to enable or disable the ASUS Dr. Power feature. Install the bundled ASUS Dr. Power Utility then enable this switch to allow the system to display notification messages in your Windows screen if a problem is detected with your Power Supply Unit (PSU).

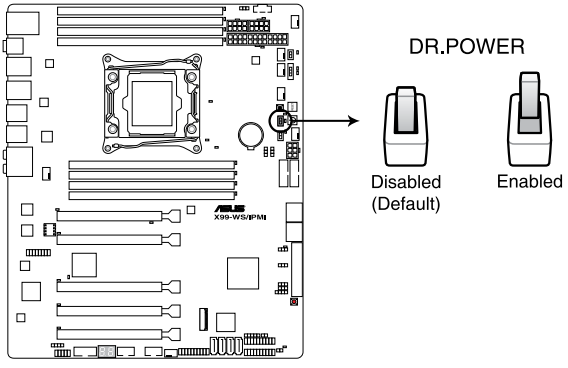

X99-WS/IPMI DR.POWER switch

The PGLED3 LED near the Dr. Power switch lights up when you enable the Dr. Power switch. Refer to section **1.2.8 Onboard LEDs** for the exact location of the PGLED3 LED.

8. EZ XMP switch

Enable this switch to overclock the installed DIMMs, allowing you to enhance the DIMM's speed and performance.

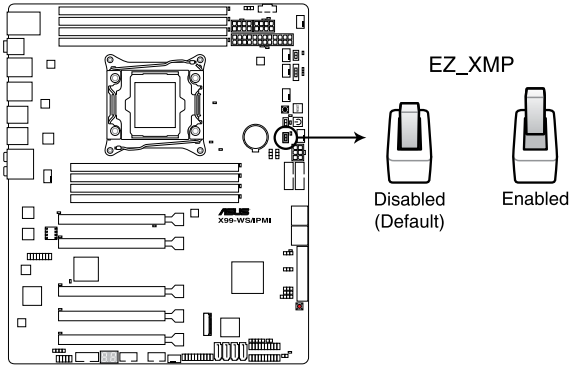

X99-WS/IPMI EZ_XMP switch

The EZ XMP LED (XLED1) lights up when you enable the EZ XMP switch. For the location of the EZ XMP LED, refer to section **1.2.8 Onboard LEDs**.

Chapter 1

1.2.7 Jumpers

1. CPU Over Voltage jumper (3-pin CPU_OV)

The CPU Over Voltage jumper allows you to set a higher CPU voltage for a flexible overclocking system, depending on the type of the installed CPU. To gain more CPU voltage setting, insert the jumper to pins 2-3. To go back to its default CPU voltage setting, insert the jumper to pins 1-2.

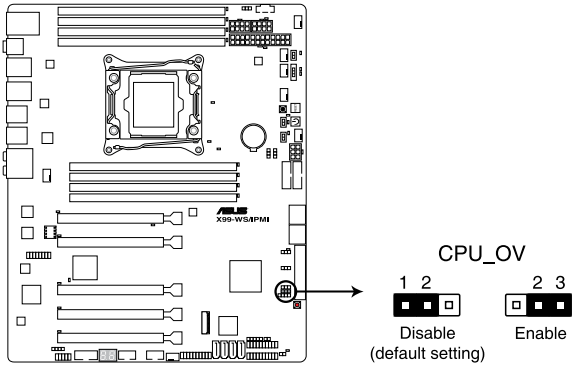

X99-WS/IPMI CPU_OV setting

2. Chassis Fan control setting jumper (3-pin CHAFAN_SEL)

These jumpers allow you to switch fan pin selection. The CHAFAN_SEL jumper is for the front fans and rear fans control. Set pins 1-2 to let the BIOS control the settings of the chassis fans. Set pins 2-3 to control the settings of the 4-pin PWM fans.

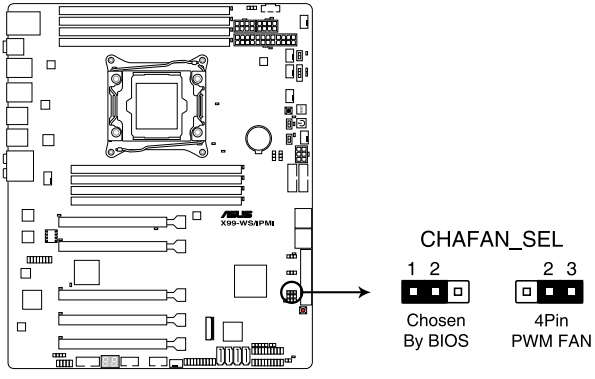

X99-WS/IPMI CHAFAN setting

Chapter 1

3. **SMBUS connection setting jumper (3-pin TESLA_M_SW)**

This jumper allows you to select the connection to BMC or PCH for PCIE 1, PCIE 3, and PCIE 5 SMBUS.

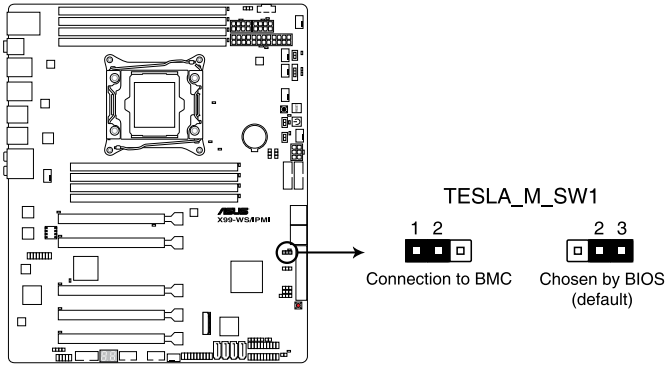

X99-WS/IPMI TESLA_M_SW1 setting

4. **DDR4 Thermaltrip setting jumper (3-pin DIMMTRIP1)**

This jumper allows you to enable or disable DDR4 DIMM thermal sensing event feature.

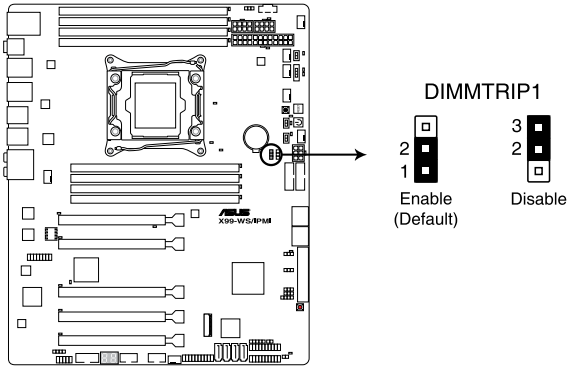

X99-WS/IPMI Thermaltrip setting

Chapter 1

5. **PMBus 1.2 PSU select jumper (3-pin SMART_PSU1)**

This jumper allows you to select PSU PMBus version. Set to pins 1-2 for PMBus, or set to pins 2-3 for others.

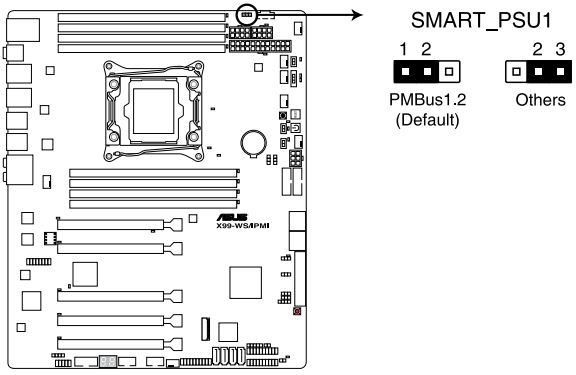

X99-WS/IPMI PMBus 1.2 PSU setting

6. **VGA controller setting (3-pin VGA_SW1)**

This jumper allows you to enable o disable the onboard VGA controller. Set to pins 1-2 to activate the VGA feature.

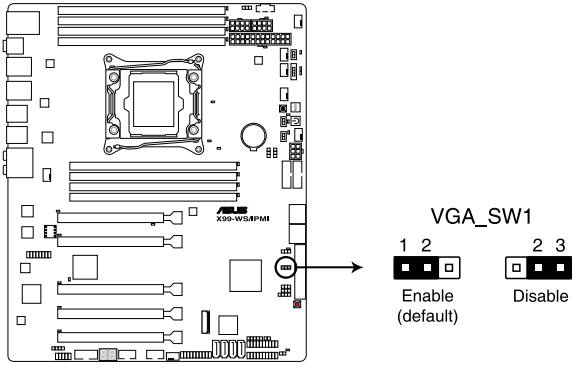

X99-WS/IPMI VGA setting

Chapter 1

7. **Baseboard Management Controller jumper (3-pin BMC_EN1)**

This jumper allows you to enable o disable the Base Management Controller. Set to pins 1-2 to activate the BMC feature.

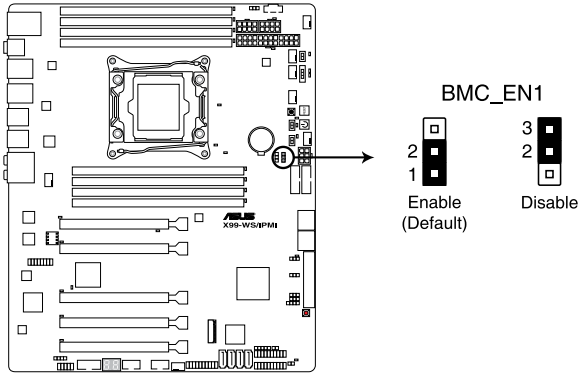

X99-WS/IPMI BMC setting

8. **Power supply SMBus connector (PSUSMB1)**

This connector supplies power for low-speed system management communications.

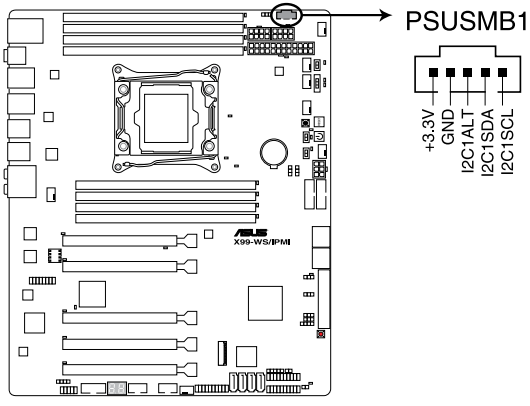

Chapter 1

1.2.8 Onboard LEDs

1. Diagnosis LEDs

The Diagnosis LEDs provide the status of these key components during POST (Power-On-Self Test): CPU, memory modules, VGA card, and hard disk drives. If an error is found, the critical component's LED stays lit up until the problem is solved.

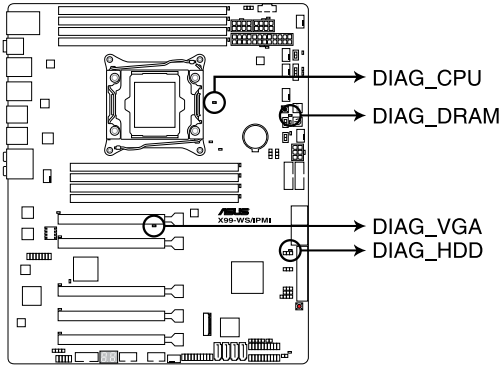

X99-WS/IPMI Diagnosis LED

2. TPU LED (TPU_LED)

The TPU LED lights up when the TPU switch is enabled.

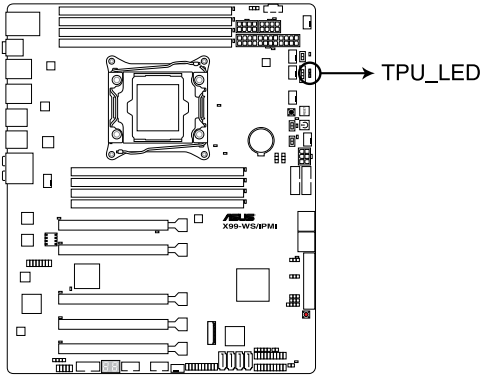

X99-WS/IPMI TPU LEDs

3. EPU LED (O2LED3)

The EPU LED lights up when the EPU switch is enabled.

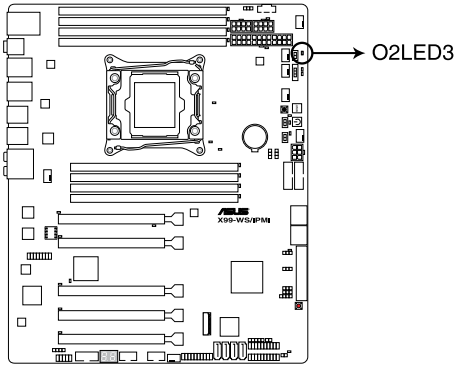

X99-WS/IPMI EPU LED

4. EZ XMP LED (XLED1)

This LED lights up when you enable the EZ XMP switch.

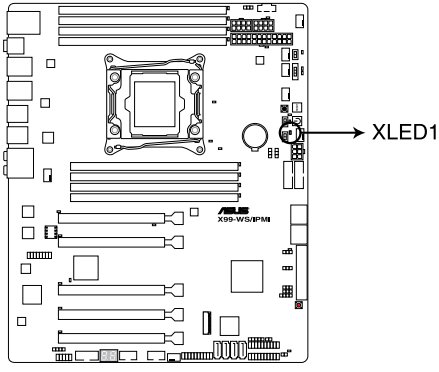

X99-WS/IPMI XLED1

Chapter 1

5. **ASUS Dr. Power LED (PGLED3)**

This LED near the Dr. Power switch lights up when the Dr. Power switch is enabled.

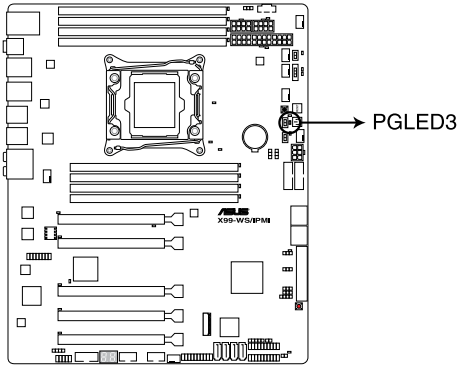

X99-WS/IPMI PGLED3

6. **PWR_SUPPLY LED**

The ASUS Dr. Power LED near the EATX PWR connector lights up when the ASUS Dr. Power switch setting is on and the power supply unit has failed.

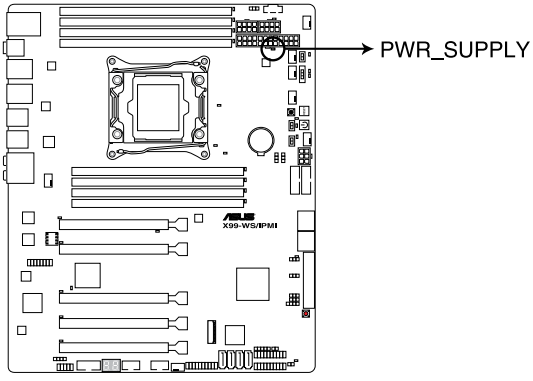

X99-WS/IPMI PWR_SUPPLY LED

7. **Power LED (+12V_PWR LED)**

The Power LED near the EATX12V1 connector lights up when you enable the ASUS Dr. Power switch and if there is no power detected on the 8-pin EATX12V connector.

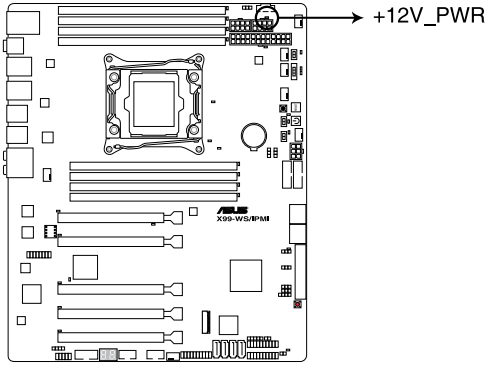

X99-WS/IPMI +12V_PWR LED

8. **Baseboard Management Controller LED (BMC_LED1)**

The BMC LED lights up when the Baseboard Management Controller jumper is set to enabled.

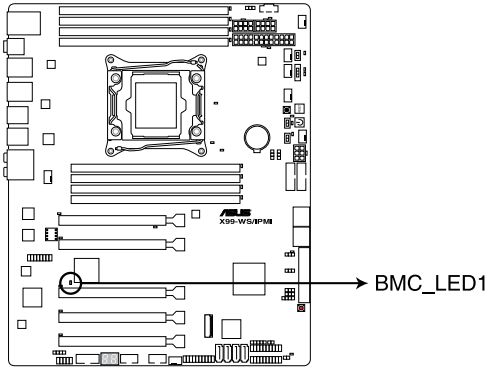

X99-WS/IPMI BMC_LED1

Chapter 1

9. **Q-Code LEDs**

The Q-Code LED design provides you with a 2-digit error code that displays the system status. Refer to the Q-Code table on the next page for details.

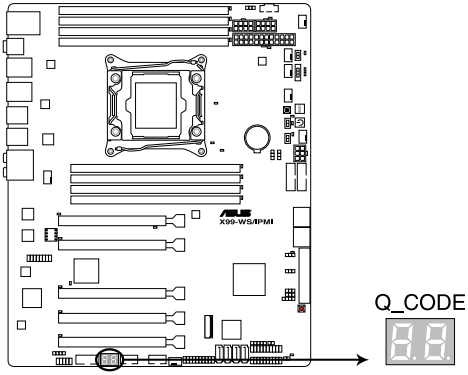

X99-WS/IPMI Q-Code LED

Q-Code table

Code	Description
00	Not used
02	microcode
03	CACHE_ENABLED
04	PCH initialization
06	CPU_EARLY_INIT
10	PEI Core is started
11 – 14	Pre-memory CPU initialization is started
15 – 18	Pre-memory System Agent initialization is started
19 – 1C	Pre-memory PCH initialization is started
2B – 2F	Memory initialization
30	Reserved for ASL (see ASL Status Codes section below)
31	Memory Installed
32 – 36	CPU post-memory initialization
37 – 3A	Post-Memory System Agent initialization is started
3B – 3E	Post-Memory PCH initialization is started
4F	DXE IPL is started
50 – 53	Memory initialization error. Invalid memory type or incompatible memory speed
4F	DXE IPL is started
54	Unspecified memory initialization error
55	Memory not installed
56	Invalid CPU type or Speed
57	CPU mismatch
58	CPU self test failed or possible CPU cache error
59	CPU micro-code is not found or micro-code update is failed
5A	Internal CPU error
5B	Reset PPI is not available
5C – 5F	Reserved for future AMI error codes
E0	S3 Resume is stared (S3 Resume PPI is called by the DXE IPL)
E1	S3 Boot Script execution
E2	Video repost
E3	OS S3 wake vector call
E4 – E7	Reserved for future AMI progress codes
E8	S3 Resume Failed
E9	S3 Resume PPI not Found
EA	S3 Resume Boot Script Error
EB	S3 OS Wake Error
EC – EF	Reserved for future AMI error codes
F0	Recovery condition triggered by firmware (Auto recovery)
F1	Recovery condition triggered by user (Forced recovery)
F2	Recovery process started
F3	Recovery firmware image is found
F4	Recovery firmware image is loaded
F5 – F7	Reserved for future AMI progress codes
F8	Recovery PPI is not available
F9	Recovery capsule is not found

(continued on the next page)

Code	Description
FA	Invalid recovery capsule
FB – FF	Reserved for future AMI error codes
60	DXE Core is started
61	NVRAM initialization
62	Installation of the PCH Runtime Services
63 – 67	CPU DXE initialization is started
68	PCI host bridge initialization
69	System Agent DXE initialization is started
6A	System Agent DXE SMM initialization is started
6B – 6F	System Agent DXE initialization (System Agent module specific)
70	PCH DXE initialization is started
71	PCH DXE SMM initialization is started
72	PCH devices initialization
73 – 77	PCH DXE Initialization (PCH module specific)
78	ACPI module initialization
79	CSM initialization
7A – 7F	Reserved for future AMI DXE codes
90	Boot Device Selection (BDS) phase is started
91	Driver connecting is started
92	PCI Bus initialization is started
93	PCI Bus Hot Plug Controller Initialization
94	PCI Bus Enumeration
95	PCI Bus Request Resources
96	PCI Bus Assign Resources
97	Console Output devices connect
98	Console input devices connect
99	Super IO Initialization
9A	USB initialization is started
9B	USB Reset
9C	USB Detect
9D	USB Enable
9E – 9F	Reserved for future AMI codes
A0	IDE initialization is started
A1	IDE Reset
A2	IDE Detect
A3	IDE Enable
A4	SCSI initialization is started
A5	SCSI Reset
A6	SCSI Detect
A7	SCSI Enable
A8	Setup Verifying Password
A9	Start of Setup
AA	Reserved for ASL (see ASL Status Codes section below)
AB	Setup Input Wait

(continued on the next page)

Code	Description
AC	Reserved for ASL (see ASL Status Codes section below)
AD	Ready To Boot event
AE	Legacy Boot event
AF	Exit Boot Services event
B0	Runtime Set Virtual Address MAP Begin
B1	Runtime Set Virtual Address MAP End
B2	Legacy Option ROM Initialization
B3	System Reset
B4	USB hot plug
B5	PCI bus hot plug
B6	Clean-up of NVRAM
B7	Configuration Reset (reset of NVRAM settings)
B8– BF	Reserved for future AMI codes
D0	CPU initialization error
D1	System Agent initialization error
D2	PCH initialization error
D3	Some of the Architectural Protocols are not available
D4	PCI resource allocation error. Out of Resources
D5	No Space for Legacy Option ROM
D6	No Console Output Devices are found
D7	No Console Input Devices are found
D8	Invalid password
D9	Error loading Boot Option (LoadImage returned error)
DA	Boot Option is failed (StartImage returned error)
DB	Flash update is failed
DC	Reset protocol is not available

ACPI/ASL Checkpoints (under OS)

Code	Description
03	System is entering S3 sleep state
04	System is entering S4 sleep state
05	System is entering S5 sleep state
30	System is waking up from the S3 sleep state
40	System is waking up from the S4 sleep state
AC	System has transitioned into ACPI mode. Interrupt controller is in PIC mode.
AA	System has transitioned into ACPI mode. Interrupt controller is in APIC mode.

1.2.9 Internal connectors

1. Serial port connector (10-1 pin COM1)

This connector is for the serial (COM) port. Connect the serial port module cable to one of these connectors, then install the module to a slot opening at the back of the system chassis.

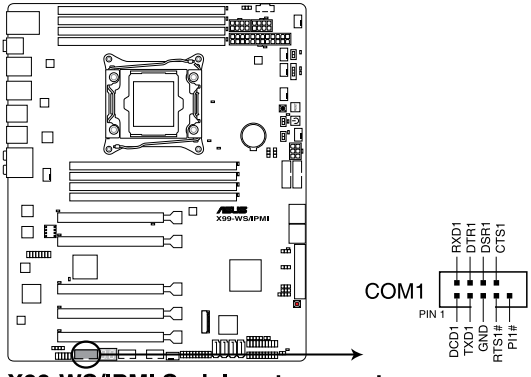

X99-WS/IPMI Serial port connector

2. Digital audio connector (4-1 pin SPDIF_OUT)

This connector is for an additional Sony/Philips Digital Interface (S/PDIF) port. Connect the S/PDIF Out module cable to this connector, then install the module to a slot opening at the back of the system chassis.

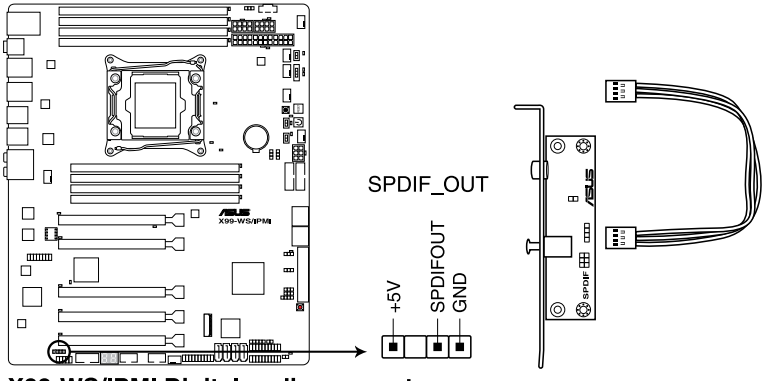

X99-WS/IPMI Digital audio connector

The S/PDIF module is purchased separately.

Chapter 1

3. **Intel® X99 Serial ATA 6 Gb/s connectors (7-pin SATA6G_12, SATA6G_34, SATA6G_56/SATAEXPRESS_1)**

These connectors connect to Serial ATA 6 Gb/s hard disk drives via Serial ATA 6 Gb/s signal cables.

If you installed Serial ATA hard disk drives, you can create a RAID 0, 1, 5, and 10 configuration with the Intel® Rapid Storage Technology through the onboard Intel® X99 chipset.

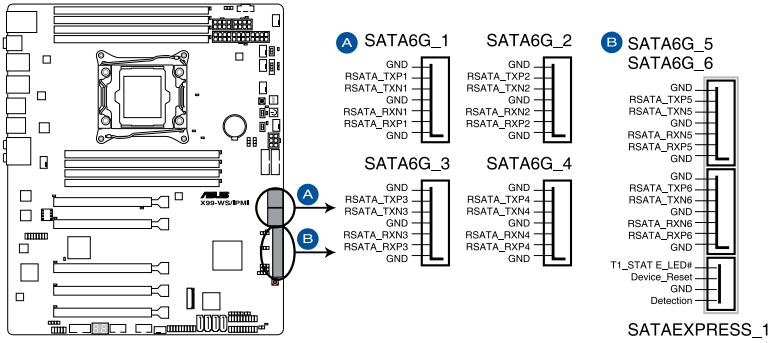

X99-WS/IPMI Intel® SATA 6 Gb/s connectors

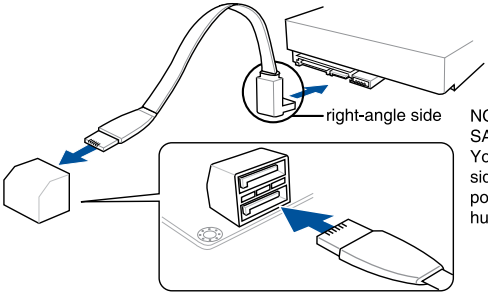

NOTE: Connect the right-angle side of SATA signal cable to SATA device. You may also connect the right-angle side of SATA cable to the onboard SATA port to avoid mechanical conflict with huge graphics cards.

- These connectors are set to **[AHCI Mode]** by default. If you intend to create a Serial ATA RAID set using these connectors, set the SATA Mode item in the BIOS to **[RAID Mode]**. Refer to section **3.6.3 PCH Storage Configuration** for details.
- Before creating a RAID set, refer to the manual bundled in the motherboard support DVD.

- The SATAEXPRESS_1 connector can support one SATA Express device or two SATA devices.
- Due to chipset behavior, the SATA6G_78 and SATA6G_910 ports (black) do not support Intel® Rapid Storage Technology and RAID configuration.

4. **Serial ATA 3.0 Gb/s connectors (SSATA1-4 [black])**

These connectors are for the Serial ATA signal cables for Serial ATA hard disk drives that allows up to 3 Gbps of data transfer rate.

If you installed Serial ATA hard disk drives, you can use a software RAID solution to create a RAID 0, RAID 1, RAID 5, or a RAID 10 configuration. For more information on the SATA RAID solutions supported on this motherboard, refer to the RAID Configuration chapter of this user guide.

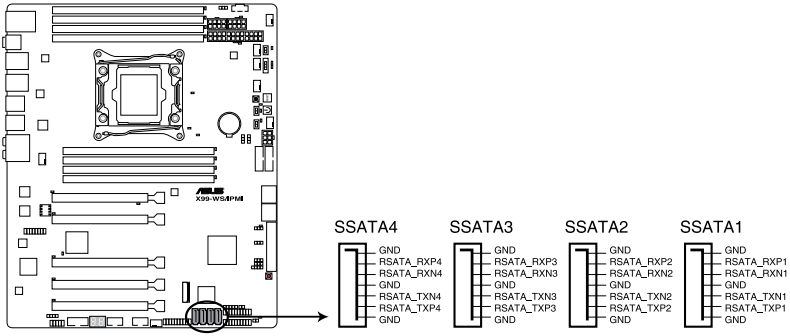

X99-WS/IPMI SSATA connectors

5. **VGA connector (VGA_HDR1)**

This connector supports the VGA High Dynamic-Range interface.

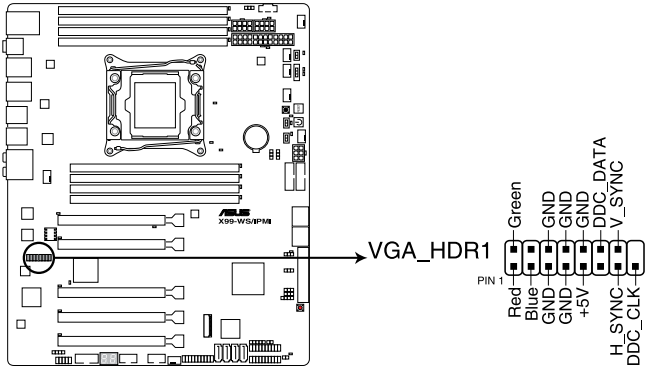

X99-WS/IPMI Internal VGA connector

Chapter 1

6. **Front panel audio connector (10-1 pin AAFP)**

This connector is for a chassis-mounted front panel audio I/O module that supports either HD Audio or legacy AC`97 audio standard. Connect one end of the front panel audio I/O module cable to this connector.

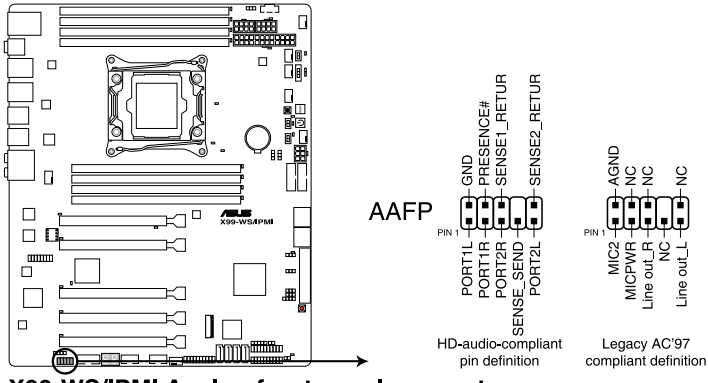

X99-WS/IPMI Analog front panel connector

- We recommend that you connect a high-definition front panel audio module to this connector to avail of the motherboard's high-definition audio capability.
- If you want to connect a high-definition or an AC'97 front panel audio module to this connector, set the Front Panel Type item in the BIOS setup to **[HD]** or **[AC97]**.

7. **System Management Bus (SMBUS) connector (5-1 pin SMBUS1)**

This connector controls the system and power management-related tasks. This connector processes the messages to and from devices rather than tripping the individual control lines.

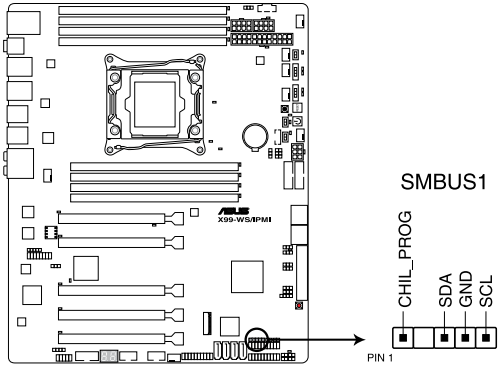

X99-WS/IPMI SMBUS connector

Chapter 1

8. **USB 3.0 connectors (20-1 pin USB3_12, USB3_34)**

These connectors allow you to connect a USB 3.0 module for additional USB 3.0 front or rear panel ports. With an installed USB 3.0 module, you can enjoy all the benefits of USB 3.0 including faster data transfer speeds of up to 5 Gb/s, faster charging time for USB-chargeable devices, optimized power efficiency, and backward compatibility with USB 2.0.

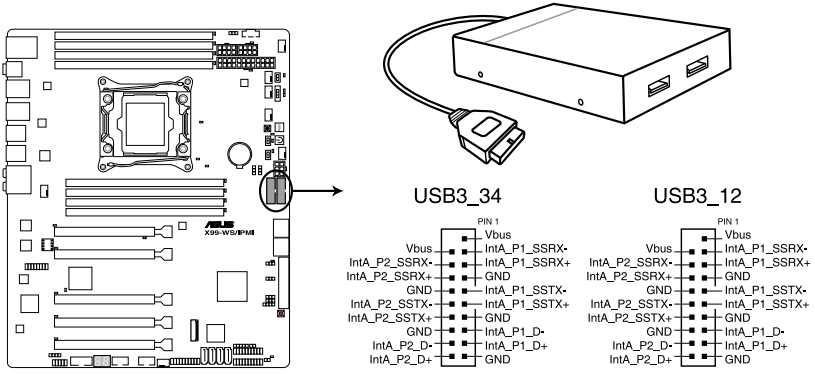

X99-WS/IPMI USB3.0 connectors

The USB 3.0 module is purchased separately.

- Ensure to install the related driver to fully use the USB 3.0 ports under Windows® 7.
- The plugged USB 3.0 device may run on xHCI or EHCI mode depending on the operating system's setting.
- These USB 3.0 ports support native UASP transfer standard in Windows® 8 / Windows® 8.1 and Turbo Mode when using USB 3.0 Boost feature.

9. **USB 2.0 connectors (10-1 pin USB910; US1112)**

These connectors are for USB 2.0 ports. Connect the USB module cable to any of these connectors, then install the module to a slot opening at the back of the system chassis. These USB connectors comply with USB 2.0 specification that supports up to 48 Mb/s connection speed.

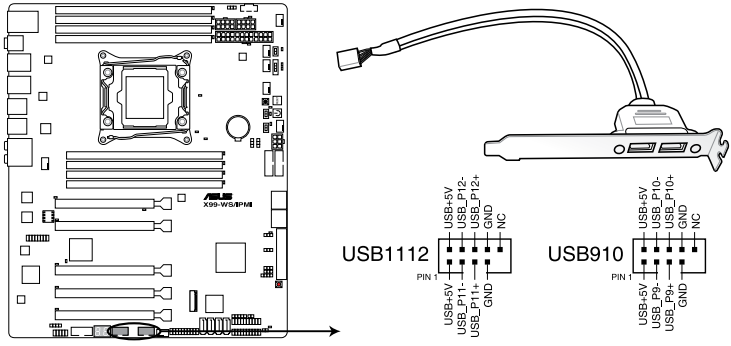

X99-WS/IPMI USB2.0 connectors

DO NOT connect a 1394 cable to the USB connectors. Doing so will damage the motherboard!

You can connect the front panel USB cable to the ASUS Q-Connector (USB) first, and then install the Q-Connector (USB) to the USB connector onboard if your chassis supports front panel USB ports.

The USB 2.0 module is purchased separately.

10. **CPU, CPU optional, auxiliary, and chassis fan connectors (4-pin CPU_FAN1-2; 4-pin REAR_FAN1; 4-pin FRNT_FAN1-3; 4-pin AUX_ FANSENSE)**

Connect the fan cables to the fan connectors on the motherboard, ensuring that the black wire of each cable matches the ground pin of the connector.

- DO NOT forget to connect the fan cables to the fan connectors. Insufficient air flow inside the system may damage the motherboard components. These are not jumpers! Do not place jumper caps on the fan connectors!
- Ensure that the CPU fan cable is securely installed to the CPU fan connector.

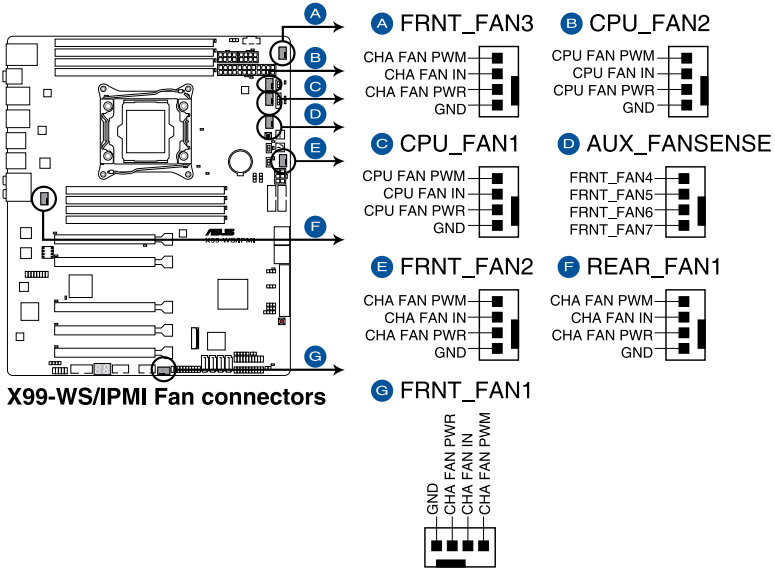

X99-WS/IPMI Fan connectors

The CPU_FAN1-2 connectors support the CPU fan of maximum 1A (12 W) fan power.

Chapter 1

11. ATX power connectors (24-pin EATXPWR12V; 8-pin EATX12V; 8-pin EATX12V1; 6-pin EATX12V_1)

These connectors are for ATX power supply plugs. The power supply plugs are designed to fit these connectors in only one orientation. Find the proper orientation and push down firmly until the connectors completely fit.

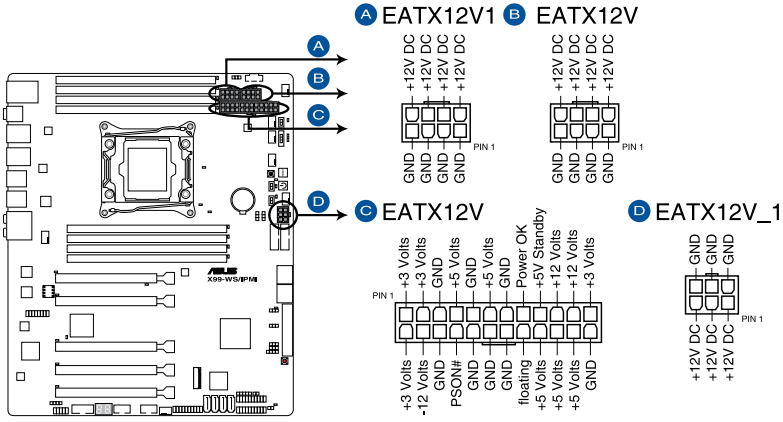

X99-WS/IPMI ATX power connectors

- For a fully configured system, we recommend that you use a power supply unit (PSU) that complies with ATX 12 V Specification 2.0 (or later version) and provides a minimum power of 350 W.
- DO NOT forget to connect the 4-pin/8-pin EATX12 V power plug. Otherwise, the system will not boot.
- We recommend that you use a PSU with a higher power output when configuring a system with more power-consuming devices. The system may become unstable or may not boot up if the power is inadequate.
- If you want to use two or more high-end PCI Express x16 cards, use a PSU with 1000W power or above to ensure the system stability.
- If you are uncertain about the minimum power supply requirement for your system, refer to the Recommended Power Supply Wattage Calculator at http://support.asus.com/PowerSupplyCalculator/PSCalculator.aspx?SLanguage=en-us for details.

12. System panel connector (20-8 pin PANEL)

This connector supports several chassis-mounted functions.

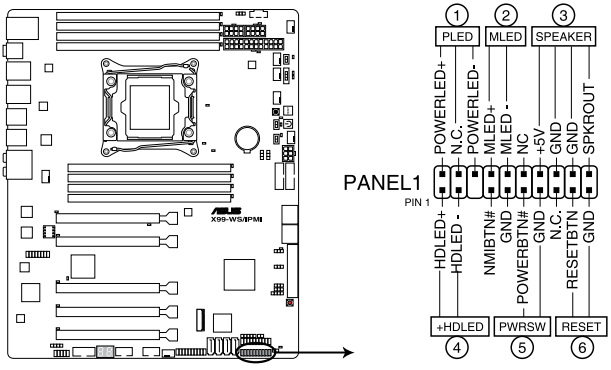

X99-WS/IPMI System panel connector

- **System power LED (2-pin PLED)**

  This 2-pin connector is for the system power LED. Connect the chassis power LED cable to this connector. The system power LED lights up when you turn on the system power, and blinks when the system is in sleep mode.

- **Hard disk drive activity LED (2-pin HDD_LED)**

  This 2-pin connector is for the HDD Activity LED. Connect the HDD Activity LED cable to this connector. The HDD LED lights up or flashes when data is read from or written to the HDD.

- **System warning speaker (4-pin SPEAKER)**

  This 4-pin connector is for the chassis-mounted system warning speaker. The speaker allows you to hear system beeps and warnings.

- **ATX power button/soft-off button (2-pin PWRSW)**

  This connector is for the system power button. Pressing the power button turns the system on or puts the system in sleep or soft-off mode depending on the operating system settings. Pressing the power switch for more than four seconds while the system is ON turns the system OFF.

- **Reset button (2-pin RESET)**

  This 2-pin connector is for the chassis-mounted reset button for system reboot without turning off the system power.

13. TPM connector (20-1 pin TPM)

This connector supports a Trusted Platform Module (TPM) system, which securely store keys, digital certificates, passwords and data. A TPM system also helps enhance network security, protect digital identities, and ensures platform integrity.

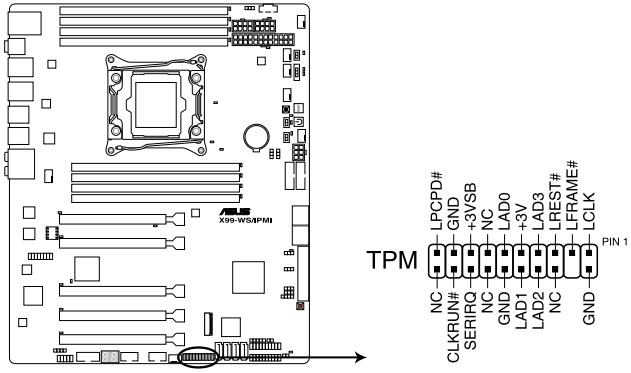

X99-WS/IPMI TPM connector

The TPM module is purchased separately.

14. DirectKey connector (2-pin DRCT)

This connector is for the chassis-mounted button that supports the DirectKey function. Connect the button cable that supports DirectKey, from the chassis to this connector on the motherboard.

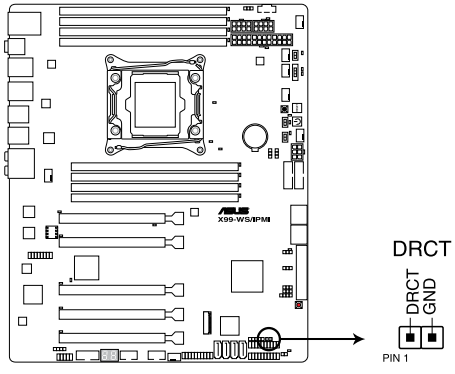

X99-WS/IPMI DRCT connector

Ensure that your chassis comes with the extra button cable that supports the DirectKey feature. Refer to the technical documentation that came with the chassis for details.

Chapter 1

15. M.2 socket 3

This socket allows you to install an M.2 (NGFF) SSD module.

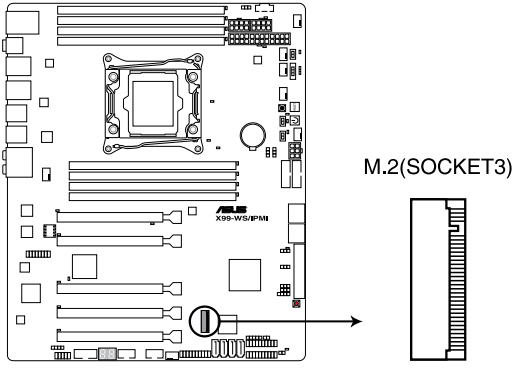

X99-WS/IPMI M.2(SOCKET3)

- This socket supports M Key and type 2260/2280 storage devices.
- This socket supports PCIe and SATA modes.

16. T_Sensor connector (2-pin T_SENSOR1)

This connector is for the thermistor cable that allows you to monitor the temperature of your motherboard's critical components and connected devices.

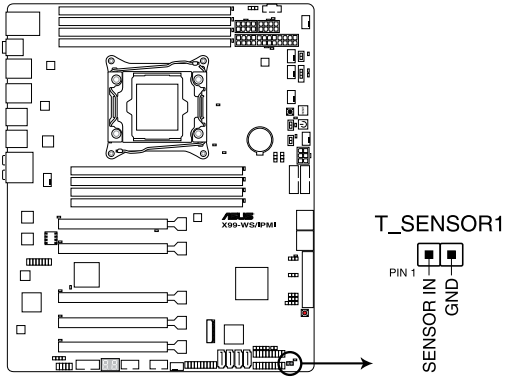

X99-WS/IPMI T_SENSOR connector

The thermistor cable is purchased separately.

Chapter 1

17. Chassis intrusion connector (4-1 pin CHASSIS)

This connector is for a chassis-mounted intrusion detection sensor or switch. Connect one end of the chassis intrusion sensor or switch cable to this connector. The chassis intrusion sensor or switch sends a high-level signal to this connector when a chassis component is removed or replaced. The signal is then generated as a chassis intrusion event.

By default, the pin labeled “Chassis Signal” and “Ground” are shorted with a jumper cap. Remove the jumper caps and enable the related options in BIOS if you intend to use the chassis intrusion detection feature.

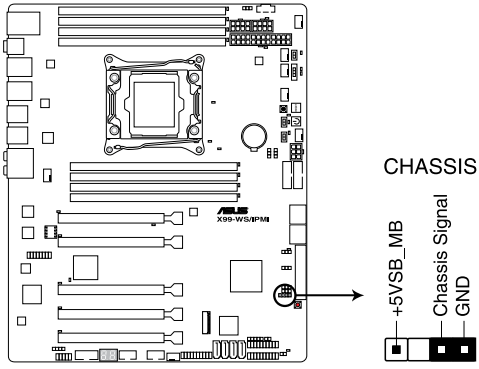

X99-WS/IPMI Chassis intrusion connector

A message appears when you connect the sensor or switch at the first time or when you reconnect the sensor or switch to this connector. Reset the system to exit the message.

18. Auxiliary panel connector (20-2 pin AUX_PANEL1)

This connector is for additional front panel features including front panel SMB, locator LED and switch, and LAN LEDs.

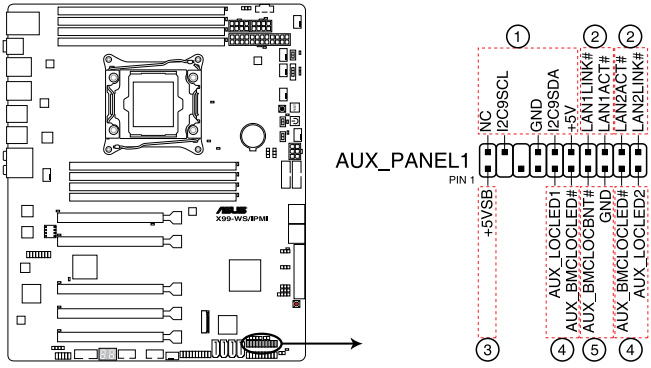

X99-WS/IPMI Auxiliary panel connector

(1) Front panel SMB (6-1 pin FPSMB)

These leads connect the front panel SMBus cable.

(2) LAN activity LED (2-pin LAN12_LED)

These leads are for Gigabit LAN activity LEDs on the front panel.

(3) Locator LED (2-pin LOCATORLED1 and 2-pin LOCATORLED2)

These leads are for the locator LED1 and LED2 on the front panel. Connect the Locator LED cables to these 2-pin connector. The LEDs will light up when the Locator button is pressed.

(4) Locator Button/Swich (2-pin LOCATORBTN)

These leads are for the locator button on the front panel. This button queries the state of the system locator.

Basic installation

2

2.1 Building your PC system

2.1.1 Motherboard installation

The diagrams in this section are for reference only. The motherboard layout may vary with models, but the installation steps are the same for all models.

1. Install the ASUS Q-Shield to the chassis rear I/O panel.

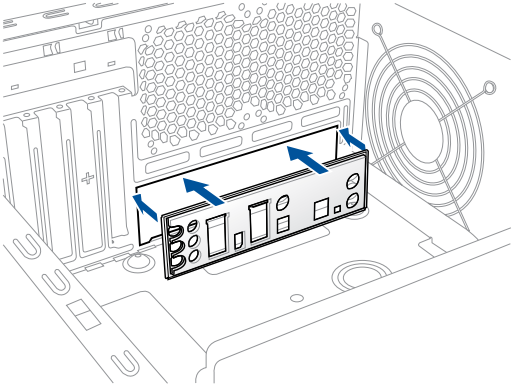

2. Place the motherboard into the chassis, ensuring that its rear I/O ports are aligned to the chassis' rear I/O panel.

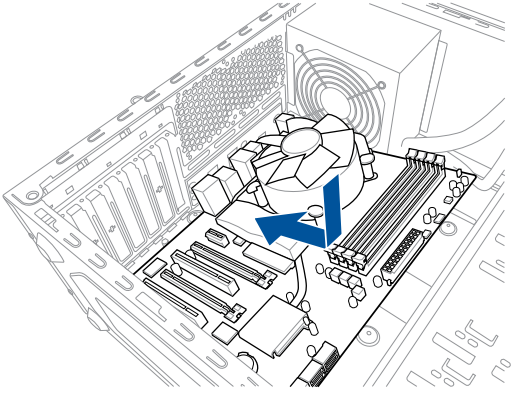

3. Place nine screws into the holes indicated by circles to secure the motherboard to the chassis.

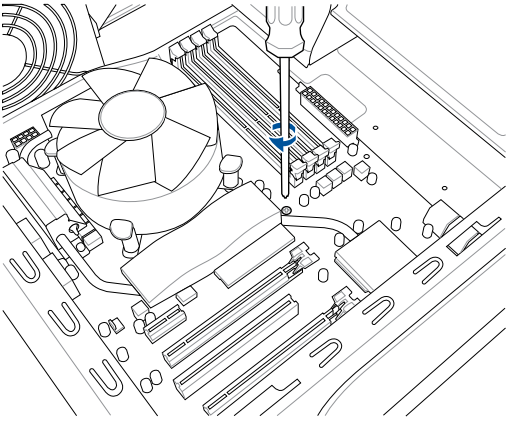

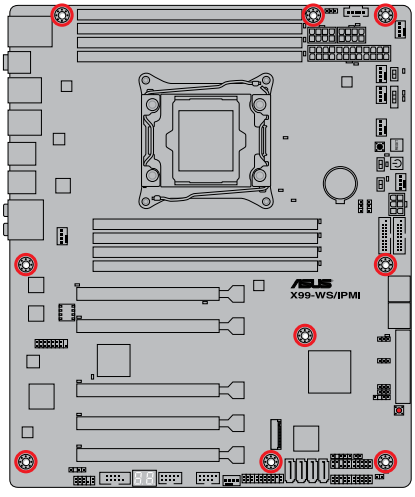

DO NOT overtighten the screws! Doing so can damage the motherboard.

Chapter 2

2.1.2 CPU installation

Please note the order in opening/ closing the double latch. Follow the instructions printed on the metal sealing hatch or the illustrations shown below in this manual. The plastic cap will pop up automatically once the CPU is in place and the hatch properly sealed down.

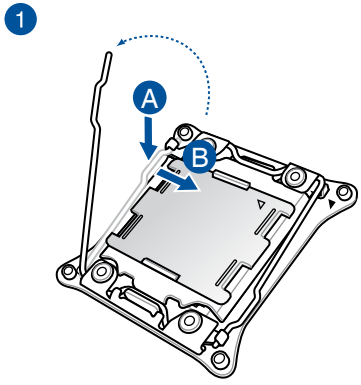

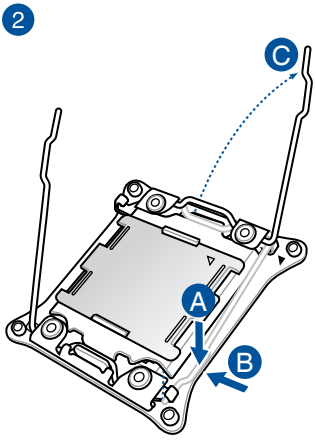

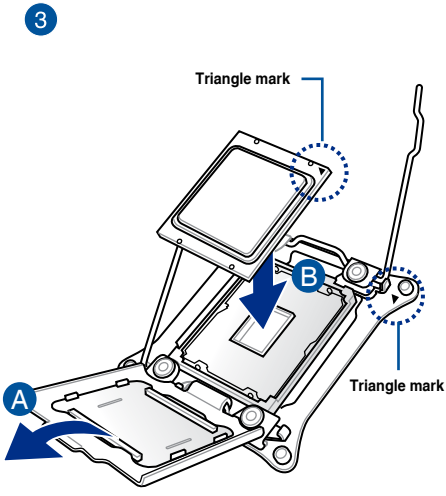

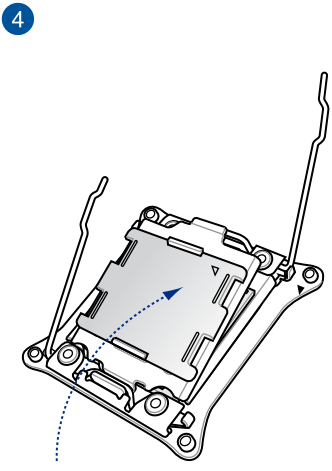

Chapter 2

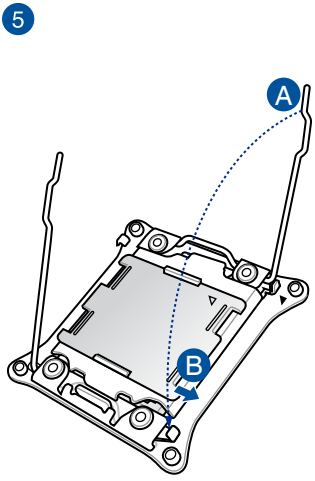

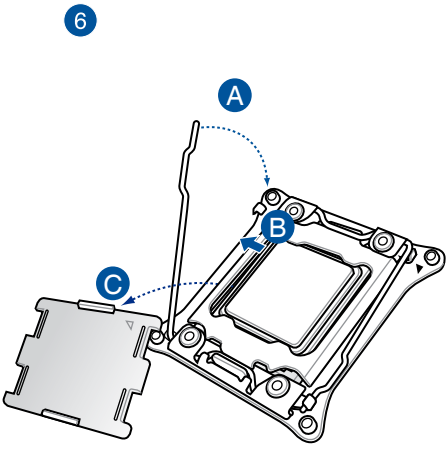

2.1.3 CPU heatsink and fan assembly installation

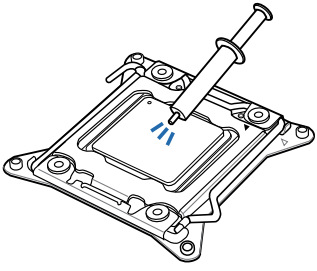

Apply the Thermal Interface Material to the CPU heatsink and CPU before you install the heatsink and fan, if necessary.

To install the CPU heatsink and fan assembly

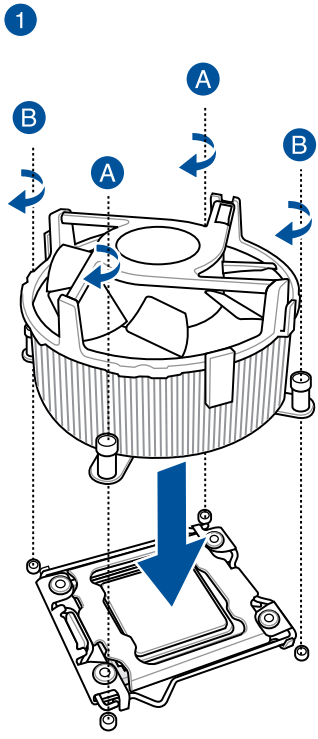

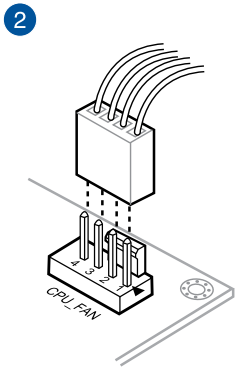

Chapter 2

2.1.4 DIMM installation

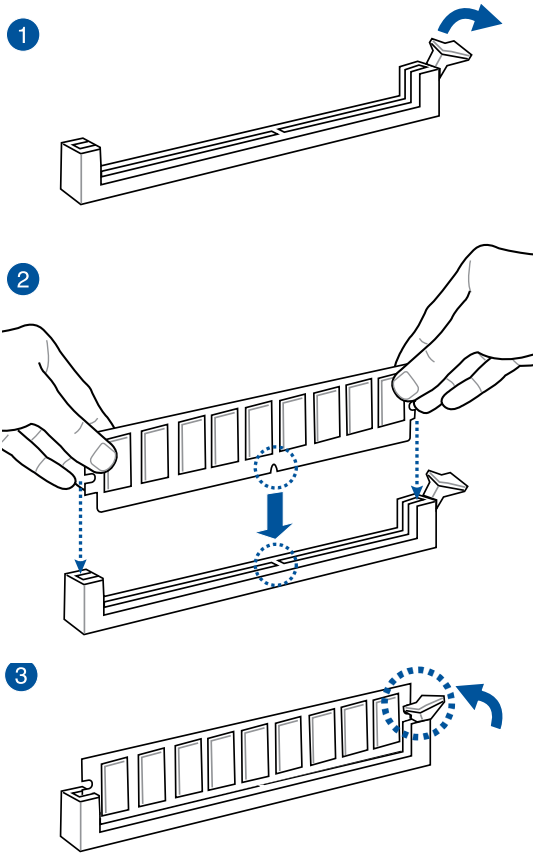

To remove a DIMM

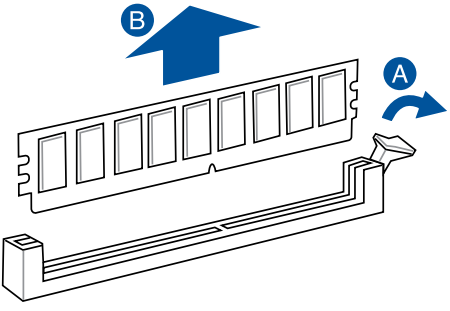

2.1.5 ATX Power connection

1

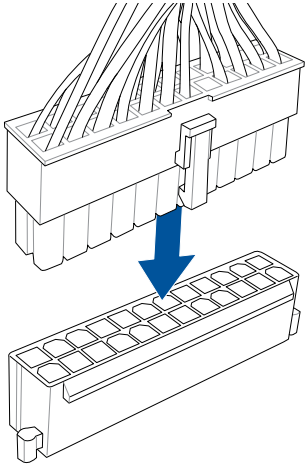

2

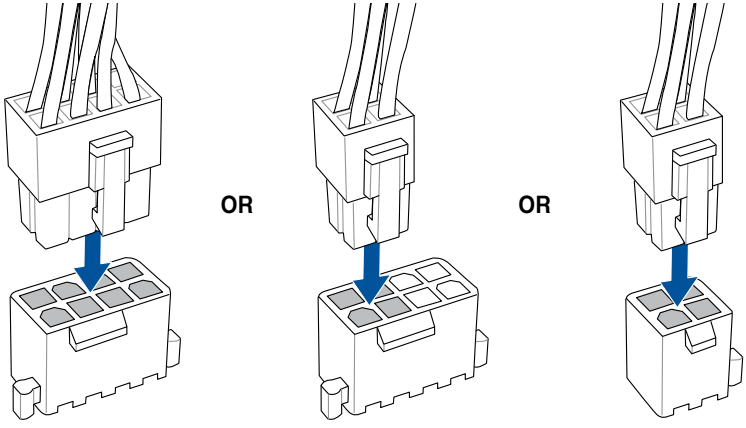

Chapter 2

2.1.6 SATA device connection

1

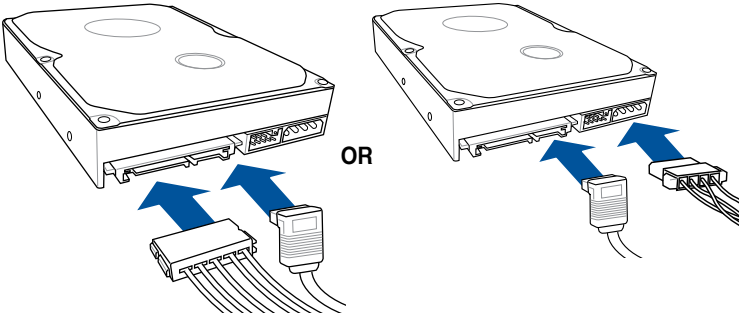

2

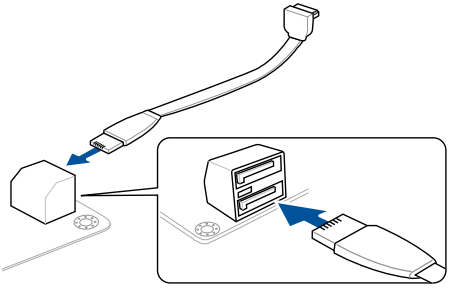

2.1.7 Front I/O Connector

To install USB 2.0 connector

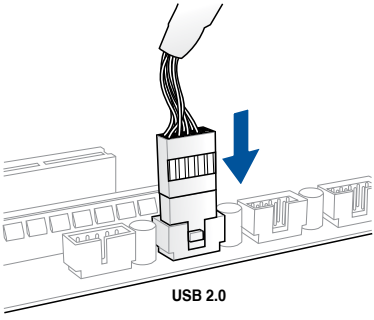

To install front panel audio connector

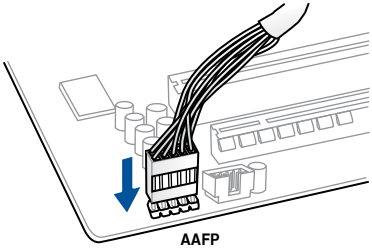

To install USB 3.0 connector

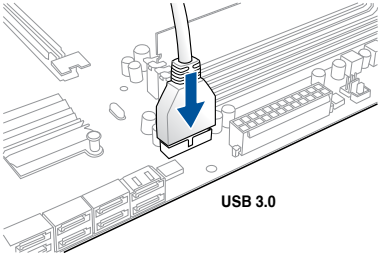

Chapter 2

2.1.8 Expansion Card installation

To install PCIe x16 cards

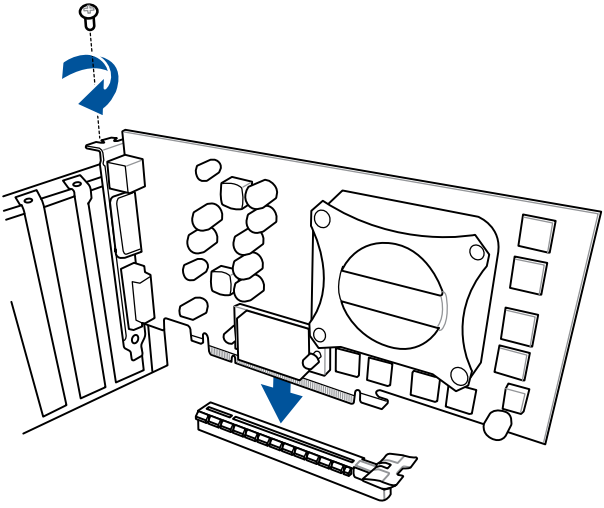

2.2 BIOS update utility

USB BIOS Flashback

USB BIOS Flashback allows you to easily update the BIOS without entering the existing BIOS or operating system. Simply insert a USB storage device to the USB port (the USB port hole marked in green on the I/O shield) then press the USB BIOS Flashback button for three seconds to automatically update the BIOS.

To use USB BIOS Flashback:

1. Download the latest BIOS from the support site at http://support.asus.com and save it to as USB storage device.

We recommend you to use a USB 2.0 storage device to save the latest BIOS version for better compatibility and stability.

2. Insert the USB storage device to the USB Flashback port.

Refer to section **2.4.1 Rear I/O connection** for the location of the USB port that supports USB BIOS Flashback.

3. Shut down your computer.
4. Press the BIOS Flashback button for three seconds until the Flashback LED blinks three times, indicating that the BIOS Flashback function is working.

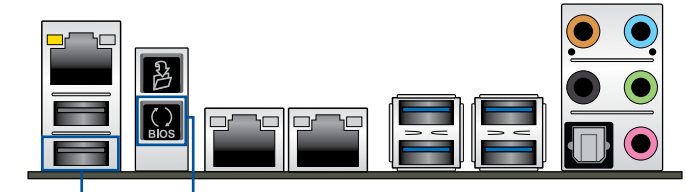

5. Wait until the light goes out, indicating that the BIOS updating process is completed.

For more BIOS update utilities in BIOS setup, refer to the section **3.12 Updating BIOS** in Chapter 3.

- Do not unplug portable disk, power system, or press the CLR_CMOS button while BIOS update is ongoing, otherwise update will be interrupted. In case of interruption, please follow the steps again.
- If the light flashes for five seconds and turns into a solid light, this means that the BIOS Flashback is not operating properly. This may be caused by improper installation of the USB storage device and filename/file format error. If this scenario happens, please restart the system to turn off the light.
- Updating BIOS may have risks. If the BIOS program is damaged during the process and results to the system's failure to boot up, please contact your local ASUS Service Center.

2.3 Q-Code Logger utility

2.3.1 Using the Q-Code Logger

Q-Code Logger allows you to easily check Q-Code event logs without opening the system's case.

To use the Q-Code Logger:

1. Insert the USB storage device to the dedicated Q-Code Logger USB port.
2. Press the Q-Code Logger button for three seconds until the Q-Code Logger LED blinks three times, indicating that the Q-Code Logger function is enabled.

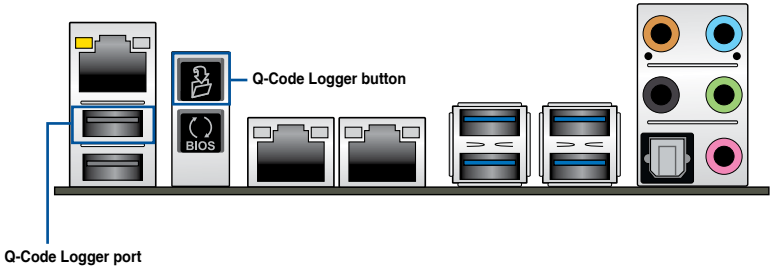

2.4 Motherboard rear and audio connection

2.4.1 Rear I/O connection

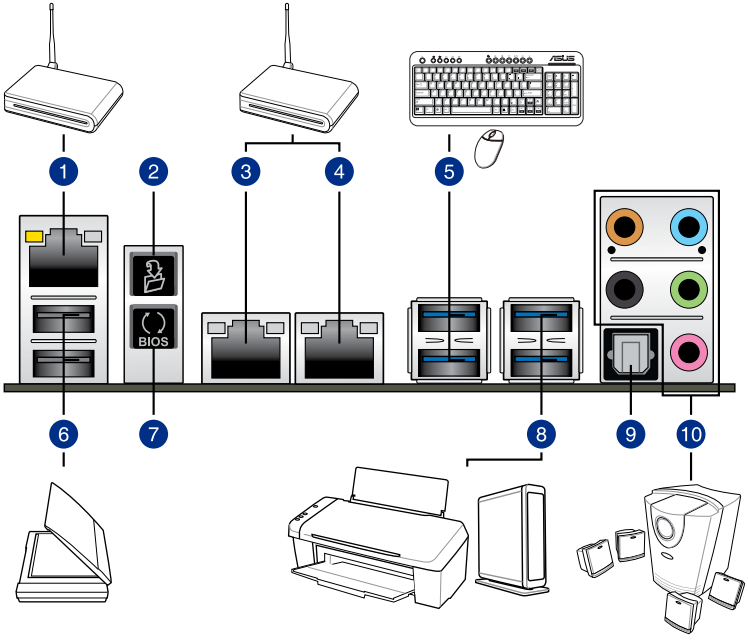

Rear panel connectors			
1.	Management LAN Port (DMLAN3)*	6.	USB 2.0 ports 78 (lower port supports USB BIOS Flashback; upper port supports Q-Code Logger
2.	Q-Code Logger button	7.	USB BIOS Flashback
3.	Intel® LAN port (LAN2)*	8.	USB 3.0 ports 56
4.	Intel® LAN port (LAN1)*	9.	Optical S/PDIF Out port
5.	USB 3.0 ports E12	10.	Audio I/O ports**

*** and **: Refer to the tables on the next page for the LAN port LEDs and audio port definitions.**

The Management LAN Port (DMLAN3) is for iKVM and only functions when you enable the ASMB8 controller.

Chapter 2

- The plugged USB 3.0 device may run on xHCI mode or EHCI mode, depending on the operating system's setting.
- USB 3.0 devices can only be used as data storage only.
- We strongly recommend that you connect USB 3.0 devices to USB 3.0 ports for faster and better performance for your USB 3.0 devices.
- Due to the design of the Intel® X99 series chipset, all USB devices connected to the USB 2.0 and USB 3.0 ports are controlled by the xHCI controller. Some legacy USB devices must update their firmware for better compatibility.

* LAN ports LED indications

Activity Link LED		Speed LED	
Status	Description	Status	Description
Off	No link	Off	10 Mbps connection
Orange	Linked	Orange	100 Mbps connection
Orange (Blinking)	Data activity	Green	1 Gbps connection
Orange (Blinking then steady)	Ready to wake up from S5 mode		

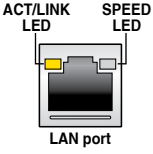

You can disable the LAN controllers in BIOS. Due to hardware design, the LAN1 port's LEDs may continue to blink even when disabled.

** Audio 2, 4, 6, or 8-channel configuration

Port	Headset 2-channel	4-channel	6-channel	8-channel
Light Blue	Line In	Line In	Line In	Side Speaker Out
Lime	Line Out	Front Speaker Out	Front Speaker Out	Front Speaker Out
Pink	Mic In	Mic In	Mic In	Mic In
Orange	–	–	Center/Subwoofer	Center/Subwoofer
Black	–	Rear Speaker Out	Rear Speaker Out	Rear Speaker Out

2.4.2 Audio I/O connection

Audio I/O ports

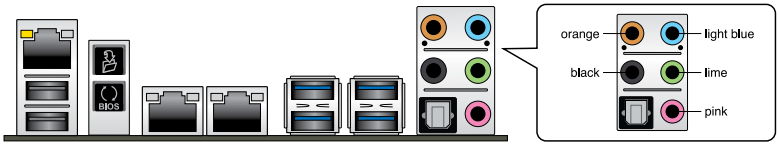

Connect to Headphone and Mic

Connect to Stereo Speakers

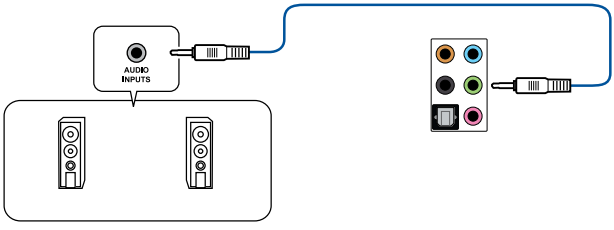

Chapter 2

Connect to 2.1 channel Speakers

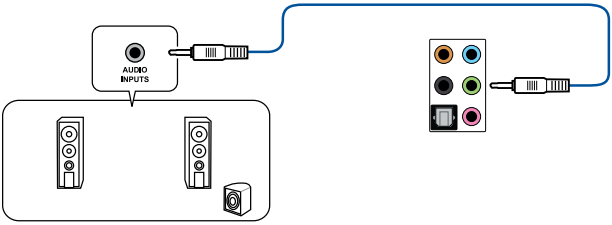

Connect to 4.1 channel Speakers

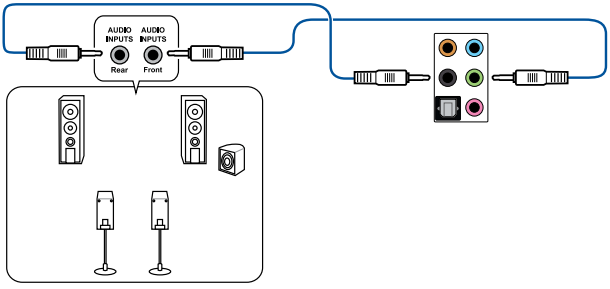

Connect to 5.1 channel Speakers

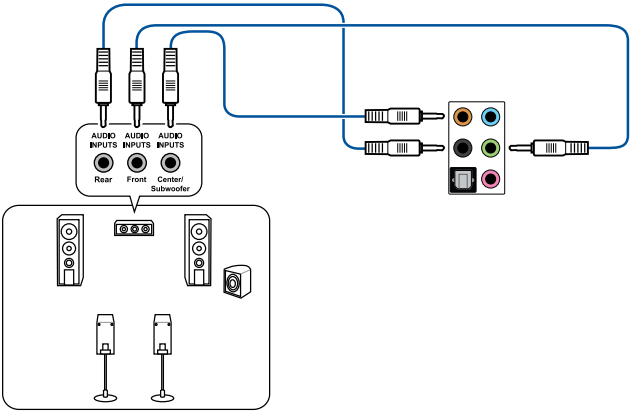

Chapter 2

Connect to 7.1 channel Speakers

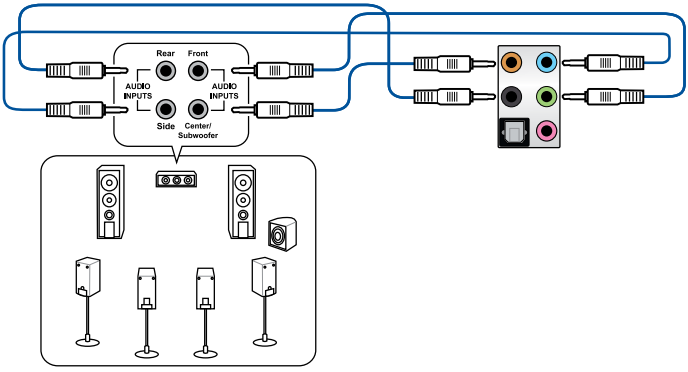

When the DTS UltraPC II function is enabled, ensure to connect the rear speaker to the light blue port.

2.5 Starting up for the first time

1. After making all the connections, replace the system case cover.
2. Ensure that all switches are off.
3. Connect the power cord to the power connector at the back of the system chassis.
4. Connect the power cord to a power outlet that is equipped with a surge protector.
5. Turn on the devices in the following order:
   a. Monitor
   b. External SCSI devices (starting with the last device on the chain)
   c. System power
6. After applying power, the system power LED on the system front panel case lights up. For systems with ATX power supplies, the system LED lights up when you press the ATX power button. If your monitor complies with the “green” standards or if it has a “power standby” feature, the monitor LED may light up or change from orange to green after the system LED turns on.

   The system then runs the power-on self tests (POST). While the tests are running, the BIOS beeps (refer to the BIOS beep codes table) or additional messages appear on the screen. If you do not see anything within 30 seconds from the time you turned on the power, the system may have failed a power-on test. Check the jumper settings and connections or call your retailer for assistance.

BIOS Beep	Description
One short beep	VGA detected Quick boot set to disabled No keyboard detected
One continuous beep followed by two short beeps then a pause (repeated)	No memory detected
One continuous beep followed by three short beeps	No VGA detected
One continuous beep followed by four short beeps	Hardware component failure

7. At power on, hold down the <Delete> key to enter the BIOS Setup. Follow the instructions in Chapter 3.

2.6 Turning off the computer

While the system is ON, press the power button for less than four seconds to put the system on sleep mode or soft-off mode, depending on the BIOS setting. Press the power switch for more than four seconds to let the system enter the soft-off mode regardless of the BIOS setting.

BIOS setup

3

3.1 Knowing BIOS

The new ASUS UEFI BIOS is a Unified Extensible Interface that complies with UEFI architecture, offering a user-friendly interface that goes beyond the traditional keyboard-only BIOS controls to enable a more flexible and convenient mouse input. You can easily navigate the new UEFI BIOS with the same smoothness as your operating system. The term “BIOS” in this user manual refers to “UEFI BIOS” unless otherwise specified.

BIOS (Basic Input and Output System) stores system hardware settings such as storage device configuration, overclocking settings, advanced power management, and boot device configuration that are needed for system startup in the motherboard CMOS. In normal circumstances, the default BIOS settings apply to most conditions to ensure optimal performance. **DO NOT change the default BIOS settings** except in the following circumstances:

- An error message appears on the screen during the system bootup and requests you to run the BIOS Setup.
- You have installed a new system component that requires further BIOS settings or update.

Inappropriate BIOS settings may result to instability or boot failure. We strongly recommend that you change the BIOS settings only with the help of a trained service personnel.

When downloading or updating the BIOS file, rename it as **X99WSI.CAP** for this motherboard.

3.2 BIOS setup program

Use the BIOS Setup to update the BIOS or configure its parameters. The BIOS screen include navigation keys and brief onscreen help to guide you in using the BIOS Setup program.

Entering BIOS at startup

To enter BIOS Setup at startup, press <Delete> during the Power-On Self Test (POST). If you do not press <Delete>, POST continues with its routines.

Entering BIOS Setup after POST

To enter BIOS Setup after POST:

- Press <Ctrl>+<Alt>+<Delete> simultaneously.
- Press the reset button on the system chassis.
- Press the power button to turn the system off then back on. Do this option only if you failed to enter BIOS Setup using the first two options.

After doing either of the three options, press <Delete> key to enter BIOS.

- The BIOS setup screens shown in this section are for reference purposes only, and may not exactly match what you see on your screen.
- Ensure that a USB mouse is connected to your motherboard if you want to use the mouse to control the BIOS setup program.
- If the system becomes unstable after changing any BIOS setting, load the default settings to ensure system compatibility and stability. Select the **Load Optimized Defaults** item under the **Exit** menu or press hotkey <F5>. See section **3.10 Exit menu** for details.
- If the system fails to boot after changing any BIOS setting, try to clear the CMOS and reset the motherboard to the default value. See section **1.2.6 Onboard buttons and switches** for information on how to erase the RTC RAM via the Clear CMOS button.
- The BIOS setup program does not support the Bluetooth devices.

3.2.1 Advanced Mode

The Advanced Mode provides advanced options for experienced end-users to configure the BIOS settings. The figure below shows an example of the Advanced Mode. Refer to the following sections for the detailed configurations.

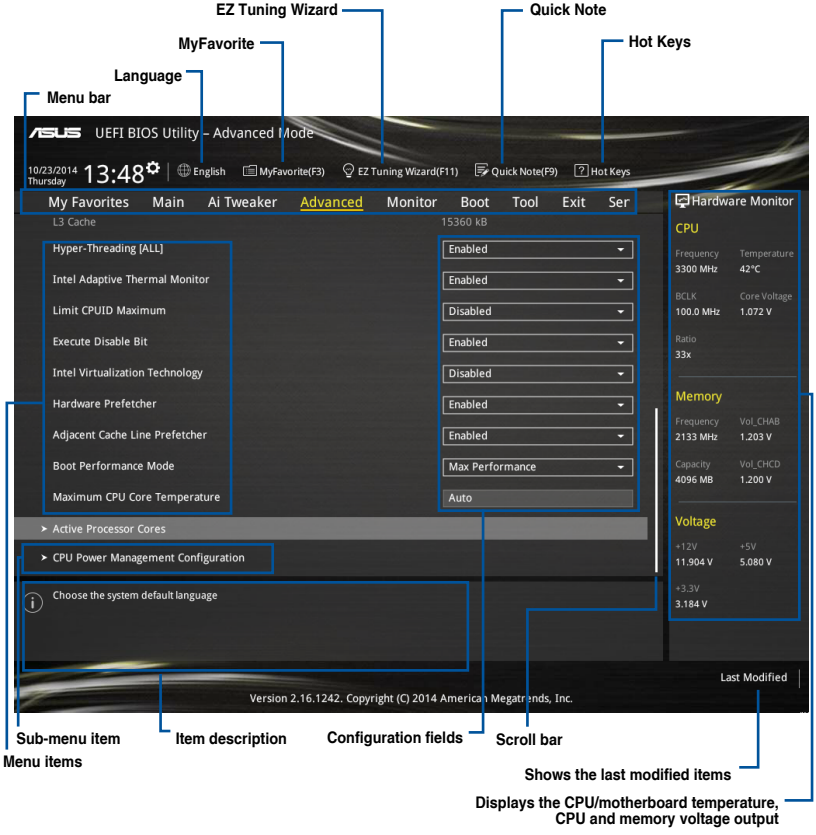

Chapter 3

Menu bar

The menu bar on top of the screen has the following main items:

My Favorites	For saving the frequently-used system settings and configuration.
Main	For changing the basic system configuration
Ai Tweaker	For changing the overclocking settings
Advanced	For changing the advanced system settings
Monitor	For displaying the system temperature, power status, and changing the fan settings.
Boot	For changing the system boot configuration
Tool	For configuring options for special functions
Exit	For selecting the exit options and loading default settings
Server Mgmt	For configuring options of server management features/functions

Menu items

The highlighted item on the menu bar displays the specific items for that menu. For example, selecting **Main** shows the Main menu items.

The other items (My Favorites, Ai Tweaker, Advanced, Monitor, Boot, Tool, and Exit) on the menu bar have their respective menu items.

Submenu items

A greater than sign (>) before each item on any menu screen means that the item has a submenu. To display the submenu, select the item and press <Enter>.

Language

This button above the menu bar contains the languages that you can select for your BIOS. Click this button to select the the language that you want to display in your BIOS screen.

MyFavorites (F3)

This button above the menu bar shows all BIOS items in a Tree Map setup. Select frequently-used BIOS settings and save it to MyFavorites menu.

Refer to section **3.3 My Favorites** for more information.

EZ Tuning Wizard (F11)

This button above the menu bar allows you to view and tweak the overclocking settings of your system. It also allows you to change the motherboard's SATA mode from AHCI to RAID mode.

Refer to section **3.2.2 EZ Tuning Wizard** for more information.

Quick Note (F9)

This button above the menu bar allows you to key in notes of the activities that you have done in BIOS.

- The Quick Note function does not support the following keyboard functions: delete, cut, copy and paste.
- You can only use the alphanumeric characters to enter your notes.

Hot keys

This button above the menu bar contains the navigation keys for the BIOS setup program. Use the navigation keys to select items in the menu and change the settings.

Scroll bar

A scroll bar appears on the right side of a menu screen when there are items that do not fit on the screen. Press the Up/Down arrow keys or <Page Up> / <Page Down> keys to display the other items on the screen.

General help

At the top right corner of the menu screen is a brief description of the selected item. Use <F12> key to capture the BIOS screen and save it to the removable storage device.

Configuration fields

These fields show the values for the menu items. If an item is user-configurable, you can change the value of the field opposite the item. You cannot select an item that is not user-configurable.

A configurable field is highlighted when selected. To change the value of a field, select it and press <Enter> to display a list of options.

Last Modified button

This button shows the items that you last modified and saved in BIOS Setup.

3.2.2 EZ Tuning Wizard

EZ Tuning Wizard allows you to overclock your CPU and DRAM, computer usage, and CPU fan to their best settings. You can also easily set RAID in your system using this feature.

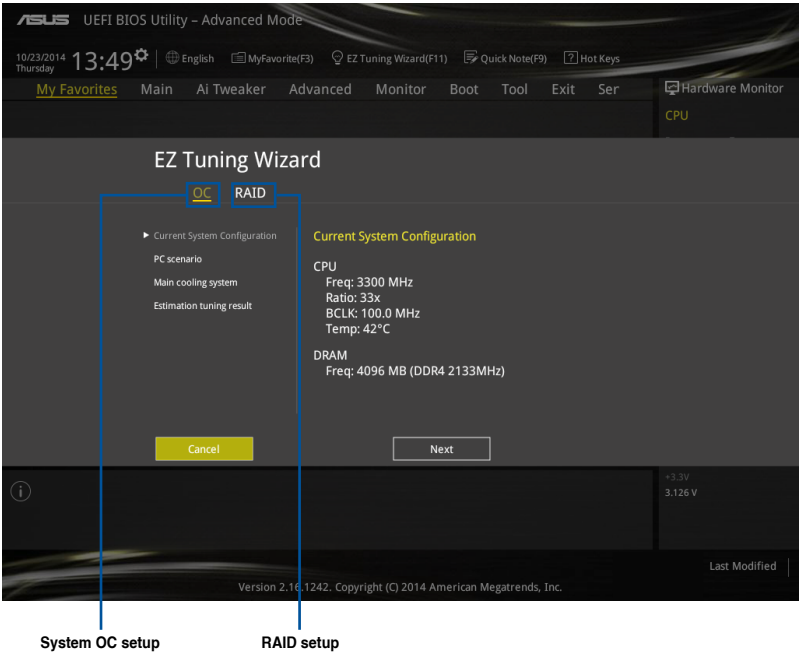

Tuning your system settings

To tune your settings:

1. Press <F11> on your keyboard or click EZ Tuning Wizard(F11) from the BIOS screen to open EZ Tuning Wizard screen, then click **Next**.
2. Select a PC scenario **Daily Computing** or **Gaming/Media Editing**, then click **Next**.
3. Select the CPU fan type (**Box cooler**, **Tower cooler**, or **Water cooler**) that you installed then click **Next**.

If you are not sure of the CPU fan type, click **I'm not sure**. The system automatically detects the CPU fan type.

4. Click **Next** then click **Yes** to confirm auto-tuning.

Chapter 3

Creating RAID

To create RAID:

1. Press <F11> on your keyboard or click EZ Tuning Wizard(F11) from the BIOS screen to open EZ Tuning Wizard screen.

2. Click **RAID** then click **Next**.

- Ensure that your HDDs have no existing RAID volumes.
- Ensure to connect your HDDs to Intel® SATA connectors.

3. Select the type of storage for your RAID **Easy Backup** or **Super Speed**, then click **Next**.

   a. For Easy Backup, click **Next** then select from **Easy Backup (RAID1)** or **Easy Backup (RAID10)**.

   You can only select Easy Backup (RAID 10) if you connect four (4) HDDs.

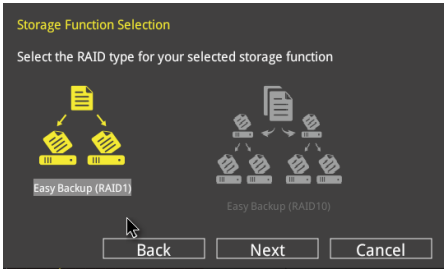

   b. For Easy Backup, click **Next** then select from **Super Speed (RAID0)** or **Super Speed (RAID5)**.

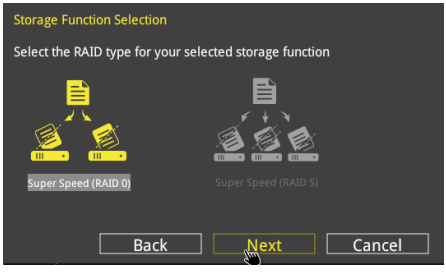

4. After selecting the type of RAID, click **Next** then click **Yes** to continue the RAID setup.

5. After the RAID setup is done, click **Yes** to exit the setup then click **OK** to reset your system.

Chapter 3

3.3 My Favorites

MyFavorites is your personal space where you can easily save and access your favorite BIOS items.

Chapter 3

Adding items to My Favorites

To add BIOS items:

1. Press <F3> on your keyboard or click (F3)MyFavorite from the BIOS screen to open Setup Tree Map screen.

2. On the Setup Tree Map screen, select the BIOS items that you want to save in MyFavorites screen.

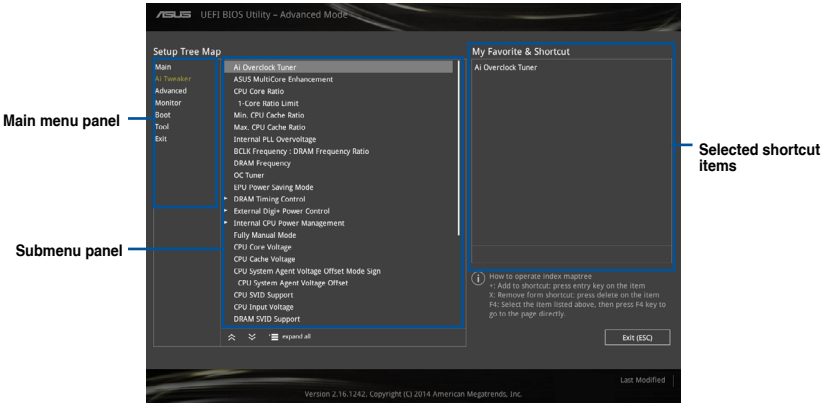

3. Select an item from main menu panel, then click the submenu that you want to save as favorite from the submenu panel and tap or click + or press <Enter> on your keyboard.

You cannot add the following items to My Favorite items:

- Items with submenu options
- User-managed items such as language and boot order
- Configuration items such as Memory SPD Information, system time and date.

4. Click **Exit (ESC)** or press <esc> key to close Setup Tree Map screen.

5. Go to My Favorites menu to view the saved BIOS items.

Chapter 3

3.4 Main menu

The Main menu screen appears when you enter the Advanced Mode of the BIOS Setup program. The Main menu provides you an overview of the basic system information, and allows you to set the system date, time, language, and security settings.

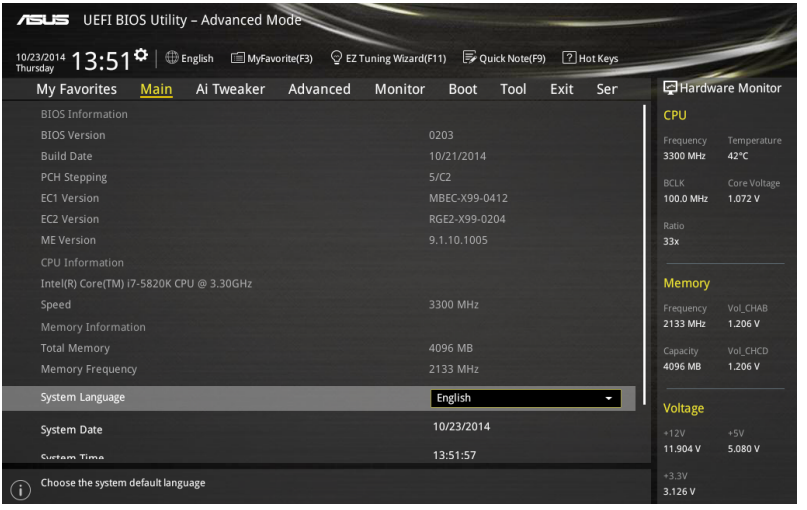

Security

The Security menu items allow you to change the system security settings.

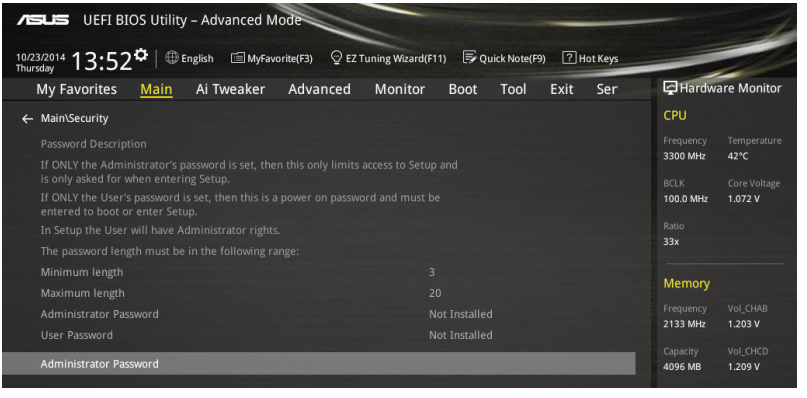

- If you have forgotten your BIOS password, erase the CMOS Real Time Clock (RTC) RAM to clear the BIOS password. See section **1.2.6 Onboard buttons and switches** for information on how to erase the RTC RAM via the Clear CMOS button.
- The Administrator or User Password items on top of the screen show the default **[Not Installed]**. After you set a password, these items show **[Installed]**.

Chapter 3

Administrator Password

If you have set an administrator password, we recommend that you enter the administrator password for accessing the system. Otherwise, you might be able to see or change only selected fields in the BIOS setup program.

To set an administrator password:

1. Select the **Administrator Password** item and press <Enter>.
2. From the **Create New Password** box, key in a password, then press <Enter>.
3. Confirm the password when prompted.

To change an administrator password:

1. Select the **Administrator Password** item and press <Enter>.
2. From the **Enter Current Password** box, key in the current password, then press <Enter>.
3. From the **Create New Password** box, key in a new password, then press <Enter>.
4. Confirm the password when prompted.

To clear the administrator password, follow the same steps as in changing an administrator password, but press <Enter> when prompted to create/confirm the password. After you clear the password, the **Administrator Password** item on top of the screen shows **Not Installed**.

User Password

If you have set a user password, you must enter the user password for accessing the system. The User Password item on top of the screen shows the default Not Installed. After you set a password, this item shows Installed.

To set a user password:

1. Select the **User Password** item and press <Enter>.
2. From the **Create New Password** box, key in a password, then press <Enter>.
3. Confirm the password when prompted.

To change a user password:

1. Select the **User Password** item and press <Enter>.
2. From the **Enter Current Password** box, key in the current password, then press <Enter>.
3. From the **Create New Password** box, key in a new password, then press <Enter>.
4. Confirm the password when prompted.

To clear the user password, follow the same steps as in changing a user password, but press <Enter> when prompted to create/confirm the password. After you clear the password, the **User Password** item on top of the screen shows **Not Installed**.

3.5 Ai Tweaker menu

The Ai Tweaker menu items allow you to configure overclocking-related items.

Be cautious when changing the settings of the Ai Tweaker menu items. Incorrect field values can cause the system to malfunction.

The configuration options for this section vary depending on the CPU and DIMM model you installed on the motherboard.

Scroll down to display other BIOS items.

Ai Overclock Tuner [Auto]

This item allows you to select the CPU overclocking options to achieve the desired CPU internal frequency. Select any of these preset overclocking configuration options:

[Auto] Loads the optimal settings for the system.

[Manual] Automatically optimizes the CPU ratio and BCLK frequency.

The following item appears only when you set the Ai Overclocking Tuner to **[Manual]**.

CPU Strap [Auto]

This item allows you to select a strap close to your target BCLK (base clock) for an extreme overclocking, or leave it at **[Auto]** for the BIOS to upgrade.
Configuration options: [Auto] [100MHz] [125MHz] [166MHz] [250MHz]

The following item appears only when you set the CPU Strap to **[100MHz]**, **[125MHz]**, **[167MHz]**, or **[250MHz]**.

Source Clock Tuner [Auto]
This item allows you to select the source clock based on the assigned CPU strap for a better overclocking capability.

Configuration options: [8Ohm dbl] [7Ohm dbl] [6Ohm dbl] [5Ohm dbl] [4Ohm dbl] [3Ohm dbl] [2Ohm dbl]

PLL Selection [Auto]

This item is set to LC PLL by default for better stability. Select SB PLL when the BCLK (base clock) frequency is far away from 100 MHz. This may affect the function of other devices that need precise clock jitters.
Configuration options: [Auto] [LC PLL] [SB PLL]

Filter PLL [Auto]

Set this item to high BCLK (base clock) mode when using a very high BCLK to improve overclocking capability.
Configuration options: [Auto] [Low BCLK mode] [High BCLK mode]

BCLK Frequency [Auto]

This item allows you to set the BCLK (base clock) frequency to enhance the system performance. Use the <+> or <-> keys to adjust the value. The values range from 80.0 MHz to 300.0 MHz.

We recommend you to set the value based on the CPU specification, as high BCLK frequencies may damage the CPU permanently.

Initial BCLK Frequency [Auto]

This item allows you to start overclocking the system from the initial BCLK (base clock) frequency to the assigned BCLK frequency. Use the <+> or <-> keys to adjust the value. The value ranges depend on the value you set on BCLK Frequency.

ASUS MultiCore Enhancement [Auto]

[Auto]	This item allows you to maximize the oveclocking performance optimized by ASUS core ratio settings.
[Disabled]	This item allows you to set to default core ratio settings.

CPU Core Ratio [Sync All Cores]

This item allows you to set the CPU core ratio limit per core or synchronize automatically to all cores.

Configuration options: [Auto] [Sync All Cores] [Per Core]

The following item appears only when you set the CPU Core Ratio to **[Per Core]**.

1-Core Ratio Limit [Auto]
Select **[Auto]** to apply the CPU default Turbo Ratio setting or manually assign a 1-Core Limit value that must be higher than or equal to the 2-Core Ratio Limit.

2-Core Ratio Limit [Auto]
Select **[Auto]** to apply the CPU default Turbo Ratio setting or manually assign a 2-Core Limit value that must be higher than or equal to the 3-Core Ratio Limit.

If you assign a value for 2-Core Ratio Limit, do not set the 1-Core Ratio Limit to **[Auto]**.

3-Core Ratio Limit [Auto]
Select **[Auto]** to apply the CPU default Turbo Ratio setting or manually assign a 3-Core Limit value that must be higher than or equal to the 4-Core Ratio Limit.

If you assign a value for 3-Core Ratio Limit, do not set the 1-Core Ratio Limit and 2-Core Ratio Limit to **[Auto]**.

4-Core Ratio Limit [Auto]
Select **[Auto]** to apply the CPU default Turbo Ratio setting or manually assign a 4-Core Limit value that must be higher than or equal to the 5-Core Ratio Limit.

If you assign a value for 4-Core Ratio Limit, do not set the 1-Core Ratio Limit, 2-Core Ratio Limit, and 3-Core Ratio to **[Auto]**.

5-Core Ratio Limit [Auto]
Select **[Auto]** to apply the CPU default Turbo Ratio setting or manually assign a 5-Core Limit value that must be higher than or equal to the 6-Core Ratio Limit.

If you assign a value for 5-Core Ratio Limit, do not set the 1-Core Ratio Limit, 2-Core Ratio Limit, 3-Core Ratio, and 4-Core Ratio to **[Auto]**.

6-Core Ratio Limit [Auto]
Select **[Auto]** to apply the CPU default Turbo Ratio setting or manually assign a 6-Core Limit value.

If you assign a value for 6-Core Ratio Limit, do not set the 1-Core Ratio Limit, 2-Core Ratio Limit, 3-Core Ratio, 4-Core Ratio, and 5-Core Ratio to **[Auto]**.

Min. CPU Cache Ratio [Auto]

This item allows you to set the minimum possible ratio on the Uncore part of the processor. Use the <+> or <-> keys to adjust the value. The values depend on the CPU installed.

Max. CPU Cache Ratio [Auto]

This item allows you to set the maximum possible ratio on the Uncore part of the processor. Use the <+> or <-> keys to adjust the value. The values depend on the CPU installed.

Internal PLL Overvoltage [Auto]

This item allows you to enable the internal PLL Overvoltage for K-SKU CPUs to get the extreme overclocking capability.

Configuration options: [Auto] [Enabled] [Disabled]

BCLK Frequency: DRAM Frequency Ratio [Auto]

This item allows you to set the base clock frequency of the DRAM frequency ratio.

[Auto]	The DRAM ratio is set to its optimized settings.
[100:100]	The DRAM ratio is set to 100:100.
[100:133]	The DRAM ratio is set to 100:133.

DRAM Frequency [Auto]

This item allows you to set the memory operating frequency. The configurable options vary with the BCLK (base clock) frequency setting. Select the auto mode to apply the optimized setting.

Configuration options: [DDR4-800MHz] [DDR4-1000MHz] [DDR4-1067MHz] [DDR4-1200MHz] [DDR4-1333MHz] [DDR4-1400MHz] [DDR4-1600MHz] [DDR4-1800MHz] [DDR4-1866MHz] [DDR4-2000MHz] [DDR4-2133MHz] [DDR4-2200MHz] [DDR4-2400MHz] [DDR4-2600MHz] [DDR4-2666MHz] [DDR4-2800MHz] [DDR4-2933MHz] [DDR4-3000MHz] [DDR4-3200MHz] [DDR4-3400MHz] [DDR4-3467MHz] [DDR4-3600MHz] [DDR4-3733MHz] [DDR4-3800MHz] [DDR4-4000MHz]

OC Tuner [Keep Current Settings]

This item allows you to automatically overclock the CPU and DRAM frequencies and voltage for an enhanced system performance. It also accelerates the CPU graphics performance to the extreme depending on the CPU graphics loading.

Configuration options: [Keep Current Settings] [Ratio Tuning] [BCLK + Ratio Tuning]

Ensure that you installed an efficient CPU fan for CPU and graphics loading before selecting either **[BCLK First]** or **[Ratio First]**. To keep the current overclocking tuner status, select **[Keep Current Settings]**.

EPU Power Saving Mode [Disabled]

The ASUS EPU (Energy Processing Unit) sets the CPU in its minimum power consumption settings. Enable this item to set lower CPU VCCIN and Vcore voltages and achieve the best energy saving condition.

Configuration options: [Disabled] [Enabled]

DRAM Timing Control

The subitems in this menu allow you to set the DRAM timing control features. Use the <+> or <-> keys to adjust the value. To restore the default setting, type [auto] using the keyboard and press the <Enter> key.

Changing the values in this menu may cause the system to become unstable! If this happens, revert to the default settings.

Primary Timings

DRAM CAS# Latency [Auto]

Configuration options: [Auto] [1] – [31]

DRAM RAS# to CAS# Delay [Auto]

Configuration options: [Auto] [1] – [31]

DRAM RAS# PRE Time [Auto]

Configuration options: [Auto] [1] – [31]

DRAM RAS# ACT Time [Auto]

Configuration options: [Auto] [1] – [63]

DRAM Command Rate [Auto]

Configuration options: [Auto] [Timing T1] – [Timing T3]

Secondary Timings

DRAM RAS# to RAS# Delay [Auto]

Configuration options: [Auto] [1] – [7]

DRAM RAS# to RAS# Delay L [Auto]

Configuration options: [Auto] [1] – [7]

DRAM REF Cycle Time [Auto]

Configuration options: [Auto] [1] – [1023]

DRAM Refresh Interval [Auto]

Configuration options: [Auto] [1] – [32767]

DRAM WRITE Recovery Time [Auto]

Configuration options: [Auto] [1] – [31]

DRAM READ to PRE Time [Auto]

Configuration options: [Auto] [1] – [15]

DRAM FOUR ACT WIN Time [Auto]

Configuration options: [Auto] [1] – [63]

DRAM WRITE to READ Delay [Auto]

Configuration options: [Auto] [1] – [15]

DRAM WRITE to READ Delay L [Auto]

Configuration options: [Auto] [1] – [15]

DRAM CKE Minimum Pulse Width [Auto]

Configuration options: [Auto] [4] – [8]

DRAM Write Latency [Auto]

Configuration options: [Auto] [1] – [31]

Third Timings

tRRDR [Auto]

Configuration options: [Auto] [1] - [7]

tRRDD [Auto]

Configuration options: [Auto] [1] - [7]

tWWDR [Auto]

Configuration options: [Auto] [1] - [7]

tWWDD [Auto]

Configuration options: [Auto] [1] - [7]

tRWDR [Auto]

Configuration options: [Auto] [1] - [7]

tWRDR [Auto]

Configuration options: [Auto] [1] - [7]

tWRDD [Auto]

Configuration options: [Auto] [1] - [7]

tRWSR [Auto]

Configuration options: [Auto] [1] - [7]

tCCD [Auto]

Configuration options: [Auto] [1] - [7]

tUWRDR [Auto]

Configuration options: [Auto] [1] - [3]

tRWDR2 [Auto]

Configuration options: [Auto] [0] - [31]

tRWDD [Auto]

Configuration options: [Auto] [0] - [31]

tRWSR2 [Auto]

Configuration options: [Auto] [0] - [31]

tWRDD2 [Auto]

Configuration options: [Auto] [0] - [31]

tCCDWR [Auto]

Configuration options: [Auto] [0] - [7]

tCCD_L [Auto]

Configuration options: [Auto] [1] – [3]

RTL IOL control

DRAM RTL INIT Value [Auto]
Configuration options: [Auto] [1] - [127]

DRAM RTL (CHA D0 R0) [Auto]
Configuration options: [Auto] [1] - [127]

DRAM RTL (CHA D0 R1) [Auto]
Configuration options: [Auto] [1] - [127]

DRAM RTL (CHA D1 R0) [Auto]
Configuration options: [Auto] [1] - [127]

DRAM RTL (CHA D1 R1) [Auto]
Configuration options: [Auto] [1] - [127]

DRAM RTL (CHB D0 R0) [Auto]
Configuration options: [Auto] [1] - [127]

DRAM RTL (CHB D0 R1) [Auto]
Configuration options: [Auto] [1] - [127]

DRAM RTL (CHB D1 R0) [Auto]
Configuration options: [Auto] [1] - [127]

DRAM RTL (CHB D1 R1) [Auto]
Configuration options: [Auto] [1] - [127]

DRAM RTL (CHC D0 R0) [Auto]
Configuration options: [Auto] [1] - [127]

DRAM RTL (CHC D0 R1) [Auto]
Configuration options: [Auto] [1] - [127]

DRAM RTL (CHC D1 R0) [Auto]
Configuration options: [Auto] [1] - [127]

DRAM RTL (CHC D1 R1) [Auto]
Configuration options: [Auto] [1] - [127]

DRAM RTL (CHD D0 R0) [Auto]
Configuration options: [Auto] [1] - [127]

DRAM RTL (CHD D0 R1) [Auto]
Configuration options: [Auto] [1] - [127]

DRAM RTL (CHD D1 R0) [Auto]
Configuration options: [Auto] [1] - [127]

DRAM RTL (CHD D1 R1) [Auto]
Configuration options: [Auto] [1] - [127]

DRAM IO-L (CHA D0 R0) [Auto]
Configuration options: [Auto] [1] - [255]

DRAM IO-L (CHA D0 R1) [Auto]
Configuration options: [Auto] [1] - [255]

DRAM IO-L (CHA D1 R0) [Auto]
Configuration options: [Auto] [1] - [255]

DRAM IO-L (CHA D1 R1) [Auto]
Configuration options: [Auto] [1] - [255]

DRAM IO-L (CHB D0 R0) [Auto]
Configuration options: [Auto] [1] - [255]

DRAM IO-L (CHB D0 R1) [Auto]
Configuration options: [Auto] [1] - [255]

DRAM IO-L (CHB D1 R0) [Auto]
Configuration options: [Auto] [1] - [255]

DRAM IO-L (CHB D1 R1) [Auto]
Configuration options: [Auto] [1] - [255]

DRAM IO-L (CHC D0 R0) [Auto]
Configuration options: [Auto] [1] - [255]

DRAM IO-L (CHC D0 R1) [Auto]
Configuration options: [Auto] [1] - [255]

DRAM IO-L (CHC D1 R0) [Auto]
Configuration options: [Auto] [1] - [255]

DRAM IO-L (CHC D1 R1) [Auto]
Configuration options: [Auto] [1] - [255]

DRAM IO-L (CHD D0 R0) [Auto]
Configuration options: [Auto] [1] - [255]

DRAM IO-L (CHD D0 R1) [Auto]
Configuration options: [Auto] [1] - [255]

DRAM IO-L (CHD D1 R0) [Auto]
Configuration options: [Auto] [1] - [255]

DRAM IO-L (CHD D1 R1) [Auto]
Configuration options: [Auto] [1] - [255]

IO control

MC Vref(CHA) [Auto]
Configuration options: [Auto] [50] - [99.911]

MC Vref(CHB) [Auto]
Configuration options: [Auto] [50] - [99.911]

MC Vref(CHC) [Auto]
Configuration options: [Auto] [50] - [99.911]

MC Vref(CHD) [Auto]
Configuration options: [Auto] [50] - [99.911]

DRAM Vref (CHA) [Auto]
Configuration options: [Auto] [60] - [99]

DRAM Vref (CHB) [Auto]
Configuration options: [Auto] [60] - [99]

DRAM Vref (CHC) [Auto]
Configuration options: [Auto] [60] - [99]

DRAM Vref (CHD) [Auto]
Configuration options: [Auto] [60] - [99]

CTL Vref (CHAB) Sign [+]
Configuration options: [+] [-]

CTL Vref (CHAB) [Auto]
Configuration options: [Auto] [0.00] - [0.20]

CTL Vref (CHCD) Sign [+]
Configuration options: [+] [-]

CTL Vref (CHCD) [Auto]
Configuration options: [Auto] [0.00] - [0.20]

Receiver DQ Pre-emphasis [Auto]
Configuration options: [Auto] [0.90] - [1.60]

Receiver DQ De-emphasis [Auto]
Configuration options: [Auto] [0.90] - [1.60]

Transmitter DQ Pre-emphasis [Auto]
Configuration options: [Auto] [0.90] - [1.60]

Receiver DQS Pre-emphasis [Auto]
Configuration options: [Auto] [0.90] - [1.60]

Receiver DQS De-emphasis [Auto]
Configuration options: [Auto] [0.90] - [1.60]

Transmitter DQS Pre-emphasis [Auto]
Configuration options: [Auto] [0.90] - [1.60]

Receiver CMD Pre-emphasis [Auto]
Configuration options: [Auto] [0.80] - [1.60]

Receiver CMD De-emphasis [Auto]
Configuration options: [Auto] [0.80] - [1.60]

Transmitter CMD De-emphasis [Auto]
Configuration options: [Auto] [0.80] - [1.60]

Receiver CLK Pre-emphasis [Auto]
Configuration options: [Auto] [1.00] - [2.00]

Receiver CLK De-emphasis [Auto]
Configuration options: [Auto] [1.00] - [2.00]

Transmitter CLK Pre-emphasis [Auto]
Configuration options: [Auto] [1.00] - [2.00]

Receiver CTL Pre-emphasis [Auto]
Configuration options: [Auto] [1.00] - [1.60]

Receiver CTL De-emphasis [Auto]
Configuration options: [Auto] [1.00] - [1.60]

Transmitter CTL Pre-emphasis [Auto]
Configuration options: [Auto] [1.00] - [1.60]

Receiver ODT Pre-emphasis [Auto]
Configuration options: [Auto] [1.00] - [1.60]

Receiver ODT De-emphasis [Auto]
Configuration options: [Auto] [1.00] - [1.60]

Transmitter ODT De-emphasis [Auto]
Configuration options: [Auto] [1.00] - [1.60]

MISC

DRAM Eventual Voltage (CHA/CHB/CHC/CHD) [Auto]

Use <+> or <-> to adjust the eventual voltages of the DIMM slots. The values range from 0.8 V to 1.9 V with a 0.10 V increment.

DRAM CLK Period [Auto]

This item allows you to set a DRAM clock period.
Configuration options: [Auto] [1] – [19]

Memory optimize Control [Auto]

This item allows you to optimize the memory control.
Configuration options: [Auto] [Enabled] [Disabled]

Enhanced Training (CHA/CHB/CHC/CHD) [Auto]

Configuration options: [Auto] [Enabled] [Disabled]

MemTest [Auto]

This item allows you to enable or disable the memory testing.
Configuration options: [Auto] [Enabled] [Disabled]

Attempt Fast Boot [Auto]

This item allows the portion of the memory reference code to be skipped when possible to increase boot speed.
Configuration options: [Auto] [Enabled] [Disabled]

Attempt Fast Cold Boot [Auto]

This item allows the portion of the memory reference code to be skipped when possible to increase boot speed.
Configuration options: [Auto] [Enabled] [Disabled]

DRAM Training [Auto]

This item allows the system to set the training channel status of the installed DRAMs.
Configuration options: [Auto] [Ignore] [Enabled]

DRAM SPD Write [Disabled]

This item allows you to enable/disable the DRAM SPD write for memory SMBus programming.
Configuration options: [Enabled] [Disabled]

External Digi+ Power Control

CPU Input Boot Voltage [Auto]

This item allows you to set a higher CPU input boot voltage for better overclocking capability. Use the <+> or <-> keys to adjust the value. The values range from 0.80 V to 2.7 V with an interval of 10 V.

CPU Load-line Calibration [Auto]

Load-line is defined by Intel® specification and affects CPU power voltage. The CPU working voltage decreases proportionally to CPU loading. Higher load-line calibration could get higher voltage and good overclocking performance, but increases the CPU and VRM thermal conditions. Select from levels 1 to 9 to adjust the CPU power voltage from 0% to 125%.
Configuration options [Auto] [Level 1] - [Level 9]

The actual performance boost may vary depending on your CPU specification.

DO NOT remove the thermal module. The thermal conditions should be monitored.

CPU VRM Switching Frequency [Auto]

This item affects the VRM transient response speed and the component thermal production. Select [Manual] to configure a higher frequency for a quicker transient response speed.

Configuration options: [Auto] [Manual]

DO NOT remove the thermal module. The thermal conditions should be monitored.

The following item appears only when you set the CPU VRM Switching Frequency to **[Manual]**.

Fixed CPU VRM Switching Frequency (KHz) [300]

This item allows you to set a higher frequency for a quicker transient response speed. Use the <+> or <-> keys to adjust the value. The values range from 300 KHz to 600 KHz with an interval of 50 KHz.

VRM Spread Spectrum [Disabled]

This item allows to enhance the system stability.

Configuration options: [Disabled] [Enabled]

Active Frequency Mode [Disabled]

This item allows to enhance the power saving condition of your system.

Configuration options: [Disabled] [Enabled]

CPU Power Phase Control [Auto]

This item allows you to set the power phase control of the CPU.

Configuration options: [Auto] [Standard] [Optimized] [Extreme] [Power Phase Response]

DO NOT remove the thermal module when setting this item to **[Power Phase Response]**. The thermal conditions should be monitored.

The following item appears only when you set the CPU Power Phase Control to **[Power Phase Response]**.

Power Phase Response [Fast]

This item allows you to set a faster phase response for the CPU to increase system performance or to slower phase response to decrease DRAM power efficiency.

Configuration options: [Ultra Fast] [Fast] [Medium] [Regular]

CPU Power Duty Control [T.Probe]

DIGI + VRM Duty Control adjusts the current of every VRM phase and the thermal conditions of every phase component.

[T. Probe]	Select to maintain the VRM thermal balance.
[Extreme]	Select to maintain the current VRM balance.

DO NOT remove the thermal module. The thermal conditions should be monitored.

CPU Current Capability [Auto]

This item provides a total power range for CPU overclocking. A higher value setting provides higher power consumption delivery and extends the overclocking frequency range simultaneously.

Configuration options: [Auto] [100%] [110%] [120%] [130%] [140%]

CPU Power Thermal Control [120]

A higher temperature brings a wider CPU power thermal range and extends the overclocking tolerance to enlarge the overclocking potential. Use the <+> or <-> keys to adjust the value. The values depend on the CPU installed.

DO NOT remove the thermal module. The thermal conditions should be monitored.

DRAM AB/CD Current Capability [100%]

This item adjusts the total power range for DRAM overclocking. Set a higher value to provide a wider total power range and extends the overclocking frequency range simultaneously.

Configuration options: [100%] [110%] [120%] [130%]

DRAM AB/CD Switching Frequency [Auto]

This item affects the overclocking range and system stability. Set this item to **[Manual]** to manually set a fixed DRAM switching frequency for an increased overclocking range or enhanced system stability.

The following item appears only when you set the DRAM Switching Frequency to **[Manual]**.

Fixed DRAM AB/CD Switching Frequency (KHz) [500]

This item allows you to set a higher frequency for an increased overclocking range or a lower frequency for an enhanced system stability. Use the <+> or <-> keys to adjust the value. The values range from 300 KHz to 550 KHz with an interval of 50 KHz.

DRAM Power Phase Control [CHA-CHB/CHC-CHD] [Standard]

This item allows you to set the DRAM power phase control.

Standard	The phase control is based on the CPU command.
Optimized	Set to the ASUS optimized phase tuning profile.
Extreme	Set to the full phase mode.

Internal CPU Power Management

The subitems in this menu allow you to set the CPU ratio and its features.

Enhanced Intel SpeedStep Technology [Enabled]

This item allows the operating system to dynamically adjust the processor voltage and cores frequency which decreases the average power consumption the average heat production.

Configuration options: [Enabled] [Disabled]

Turbo Mode [Enabled]

This item allows you to enable your core processor's speed to run faster than the base operating frequency when it is below operating power, current and temperature specification limit.

Configuration options: [Disabled] [Enabled]

The following items appear only when you set the Turbo Mode to **[Enabled]**.

Turbo Mode Parameters

Long Duration Package Power Limit [Auto]
Allows you to limit the Turbo Ratio's time duration that exceeds the TDP (Thermal Design Power) for maximum performance. Use the <+> or <-> keys to adjust the value. The values range from 1 W t0 4095 W.

Package Power Time Window [Auto]
Also known as Power Limit 1, this item allows you to maintain the time window for Turbo Ratio over TDP (Thermal Design Power). Use the <+> or <-> keys to adjust the value. The values range from 1 to 127 in seconds.

Short Duration Package Power Limit [Auto]
Also known as Power Limit 2, this item allows you to provide rapid protection when the package power exceeds the Power Limit 1. Use the <+> or <-> keys to adjust the value. The values range from 1 W t0 4095 W.

CPU Integrated VR Current Limit [Auto]
Allows you to set a higher current limit to prevent frequency and power throttling when overclocking. Use the <+> or <-> keys to adjust the value. The values range from 0.125 to 1023.875 with a 0.125 interval.

CPU Internal Power Fault Control

CPU Integrated VR Fault Management [Auto]

Disable this item to prevent tripping the Fully Integrated Voltage Regulator when doing over-voltage. We recommend you to disable this item when overclocking.

Configuration options: [Auto] [Disabled] [Enabled]

CPU Internal Power Configuration

CPU Integrated VR Efficiency Management [Auto]

This item allows you to improve the power rating when the CPU is in low power state, or make the FIVR (fully integrated voltage regulator work in high performance at all times.

Configuration options: [Auto] [High Performance] [Balanced]

Extreme Over-voltage [Disabled]

Disable this item to protect the CPU from damage by over-voltage or enable to choose a high voltage for overclocking.

Configuration options: [Disabled] [Enabled]

You can only enable this item if you enable the CPU OverVoltage jumper on your motherboard. Refer to section **1.2.2 Motherboard layout** for the location of the CPU Overvoltage jumper.

Fully Manual Mode [Disabled]

Set this item to [Enabled] to support voltage control via ROG Connect and OC Panel.

Configuration options: [Disabled] [Enabled]

The following items appear only when you set Fully Manual Mode item to **[Disabled]**.

CPU System Agent Voltage Offset Mode Sign [+]

[+] To offset the voltage by a positive value.

[-] To offset the voltage by a negative value.

CPU System Agent Voltage Offset [Auto]

This item allows you to set the amount of voltage fed to the system agent of the processor including its PCIE controller and power control unit (PCU). Setting a high system agent voltage may enhance the overclocking capability.Use the <+> or <-> key to adjust the value. The values range from 0.001 V to 0.999 V at 0.001 V increment.

CPU Core Voltage [Auto]

This item allows you to configure the amount of Voltage fed to the CPU cores. Increase the voltage when configuring a high CPU core frequency.

Configuration options: [Auto] [Manual Mode] [Offset Mode] [Adaptive Mode]

The following item appears only when you set the CPU Core Voltage to **[Manual Mode]**.

CPU Core Voltage Override [Auto]

This item allows you to configure the CPU core voltage. Use<+> or <-> key to adjust the value. The values range from 0.001V to 1.920 V at 0.001 V increment.

The following items appear only when you set the CPU Core Voltage to **[Offset Mode]**.

Offset Mode Sign [+]

[+] To offset the voltage by a positive value.

[-] To offset the voltage by a negative value.

CPU Core Voltage Offset [Auto]

This item allows you to configure the CPU core voltage offset value. Use<+> or <-> key to adjust the value. The values range from 0.001 V to 0.999V at 0.001 V increment.

The following items appear only when you set the CPU Core Voltage to **[Adaptive Mode]**.

Additional Turbo Mode CPU Core Voltage [Auto]

This item allows you to set the amount of voltage fed to the CPU cores when running in turbo mode. Increase the voltage when configuring a high CPU core frequency. The voltage you set is affected by the offset value. Use the <+> or <-> keys to adjust the value. The values range from 0.001 V to 1.920 V with a 0.001 V interval.

Total Adaptive Mode CPU Core Voltage [Auto]

This item sums up the voltages of the CPU Core Voltage offset and Additional Turbo Mode CPU Core Voltage options.

CPU Cache Voltage [Auto]

This item allows you to configure the amount of voltage fed to the CPU uncores including it is cache. Increase the voltage when configuring a high CPU cache frequency.

Configuration options: [Auto] [Manual Mode] [Offset Mode] [Adaptive Mode]

The following item appears only when you set the CPU Cache Voltage to **[Manual Mode]**.

CPU Cache Voltage Override [Auto]

This item allows you to configure the CPU cache voltage. Use<+> or <-> key to adjust the value. The values range from 0.001 V to 1.920 V at 0.001 V increment.

The following items appear only when you set the CPU Core Voltage to **[Offset Mode]**.

Offset Mode Sign [+]

[+]	To offset the voltage by a positive value.
[-]	To offset the voltage by a negative value.

CPU Cache Voltage Offset [Auto]

This item allows you to configure the CPU cache voltage offset value. Use<+> or <-> key to adjust the value. The values range from 0.001 V to 0.999 V at 0.001 V increment.

The following items appear only when you set the CPU Core Voltage to **[Adaptive Mode]**.

Additional Turbo Mode CPU Cache Voltage [Auto]

This item allows you to set the amount of voltage fed to the CPU cores when running in turbo mode. Increase the voltage when configuring a high CPU core frequency. The voltage you set is affected by the offset value. Use the <+> or <-> keys to adjust the value. The values range from 0.001 V to 1.920 V with a 0.001 V interval.

Total Adaptive Mode CPU Cache Voltage [Auto]

This item sums up the voltages of the CPU Cache Voltage offset and Additional Turbo Mode CPU Cache Voltage options.

CPU SVID Support [Auto]

Set this item to [Enabled] when overclocking. Disabling this item prevents the CPU from communicating with the external voltage regulator.

Configuration options: [Auto] [Disabled] [Enabled]

The following items appear only when you set the CPU Core Voltage to **[Enabled]**.

SVID Voltage Override[Auto]

This item allows you to set a VCCIN for the CPU during initial part of POST. Use the <+> or <-> key to adjust the value. The values range from 0.001 V to 2.440 V at 0.001 V increment.

CPU Input Voltage [Auto]

This item allows you to configure the input voltage for the CPU by the external voltage regulator. Use the <+> or <-> key to adjust the value. The values range from 0.80 V to 2.70 V at 0.010 V increment.

DRAM SVID Support [Auto]

Set this item to [Disabled] to stop the CPU from communicating with the external voltage regulator. Disable this item when you overclock your system.

Configuration options: [Auto] [Disabled] [Enabled]

DRAM Voltage (CHA/CHB, CHC/CHD) [Auto]

This item allows you to set the voltage for the system memory. Use the <+> or <-> key to adjust the value. The values range from 0.80 V to 1.90 V at 0.010 V increment.

According to Intel® CPU specifications, DIMMs with voltage requirement over 1.65 V may damage the CPU permanently. We recommend that you install the DIMMs with the voltage requirement below 1.65 V.

PCH Core Voltage [Auto]

This item allows you to configure the core voltage for the PCH (platform controller hub). Use the <+> or <-> key to adjust the value. The values range from 0.70 V to 1.80 V at 0.00625 V increment.

PCH I/O Voltage [Auto]

This item allows you to configure the I/O voltage for the PCH (platform controller hub). Use the <+> or <-> key to adjust the value. The values range from 1.20 V to 2.20 V at 0.00625 V increment.

VCCIO CPU 1.05V Voltage [Auto]

This item allows you to set the main power supply for the CPU REF. Use the <+> or <-> key to adjust the value. The values range from 0.7000 V to 1.8000 V at 0.00625 V increment.

VCCIO PCH 1.05V Voltage [Auto]

This item allows you to set the tmain power supply for the PCH REF. Use the <+> or <-> key to adjust the value. The values range from 0.7000 V to 1.8000 V at 0.00625 V increment.

VTTDR Voltage (CHA/CHB) [Auto]

This item allows you to set the termination voltage for the DRAM on the left. Use the <+> or <-> key to adjust the value. The values range from 0.2000 V to 1.0000 V at 0.00625 V increment.

VTTDR Voltage (CHC/CHD) [Auto]

This item allows you to set the termination voltage for the DRAM on the right. Use the <+> or <-> key to adjust the value. The values range from 0.2000 V to 1.0000 V at 0.00625 V increment.

PLL Termination Voltage [Auto]

This item allows you to terminate the PLL Voltage. You can use the <+> or <-> keys to adjust the value. The values range from 0.20000 V to 3.098278 V with a 0.006602 V interval.

PLL Reference Offset Mode Sign [+]

[+]	To offset the voltage by a positive value.
[–]	To offset the voltage by a negative value.

PLL Reference Offset Value [Auto]

This item allows you to configure the PLL reference value. You can use the <+> or <-> keys to adjust the value.

Configuration options: [Auto] [1] - [20]

CPU Spread Spectrum [Auto]

This item allows you to enhance the BCLK overclocking capability or reduce the EMI (electromagnetic disturbance) generated by the BCLK. Set this item to [Enabled] for EMI reduction, or set this item to [Disabled] to enhance BCLK overclocking.

Configuration options: [Auto] [Disabled] [Enabled]

3.6 Advanced menu

The Advanced menu items allow you to change the settings for the CPU and other system devices.

Be cautious when changing the settings of the Advanced menu items. Incorrect field values can cause the system to malfunction.

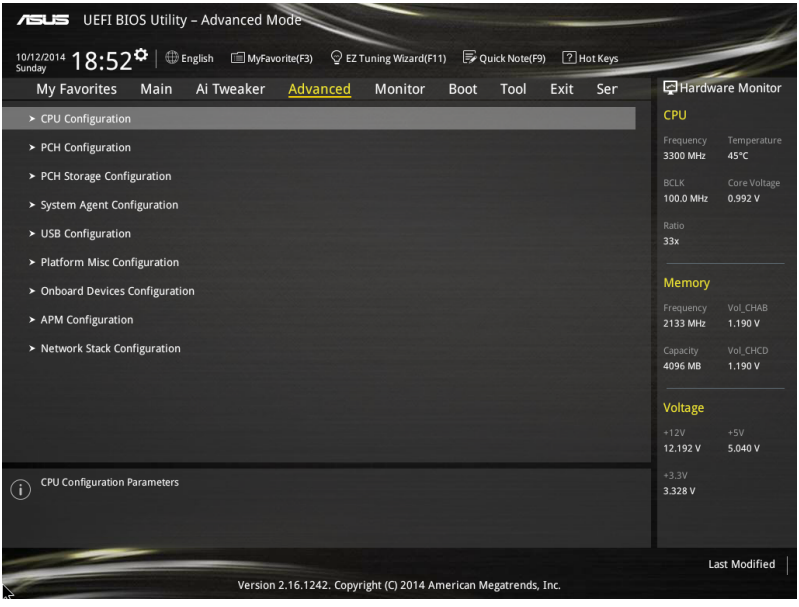

Chapter 3

3.6.1 CPU Configuration

The items in this menu show the CPU-related information that the BIOS automatically detects.

The items in this menu may vary based on the CPU installed.

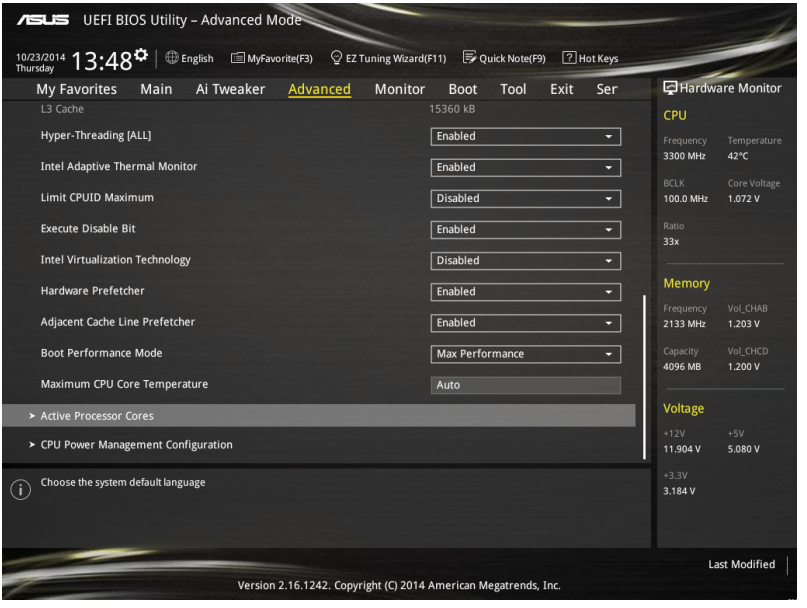

Hyper-Threading [ALL] [Enabled]

This item allows you to enable/disable the Hyper-Threading for logical processor threads.

Configuration options: [Enabled] [Disabled]

Intel Adaptive Thermal Monitor [Enabled]

This item allows you to protect the CPU by decreasing its frequency as it reaches the thermal throttle point. The thermal monitor includes TM1 (Thermal monitor 1), TM2 (Thermal monitor 2), and EMTTM (Enhanced Multi-threaded Thermal Monitoring).

Configuration options: [Disabled] [Enabled]

Limit CPUID Maximum [Disabled]

When set to **[Enabled]**, this item allows the legacy OS to boot even without support for CPUs with extended CPUID functions.

Configuration options: [Disabled] [Enabled]

Execute Disable Bit [Enabled]

Execute Disable prevents certain classes of malicious buffer overflow attacks when combined with a supporting OS (SuSE Linux 9.2, RedHat Enterprise 3 Update 3).

Configuration options: [Disabled] [Enabled]

Intel Virtualization Technology [Disabled]

When set to **[Enabled]**, a VMM can utilize the additional hardware capabilities provided by Vanderpool Technology.

Configuration options: [Disabled] [Enabled]

Hardware Prefetcher [Enabled]

This item allows the CPU to prefetch commands and data in the L2 cache, reduces the DRAM loading time and improves the system performance.

Configuration options: [Disabled] [Enabled]

Adjacent Cache Line Prefetcher [Enabled]

This item allows the mid level cache (L2) to prefetch adjacent cache lines, reducing the DRAM loading time and improves the system performance.

Configuration options: [Disabled] [Enabled]

Boot Performance Mode [Max Performance]

This item allows you to select the CPU performance state during system boot before the operating system takes control. The CPU runs at a selected performance ratio based on CPU configuration.

Configuration options: [Max Efficient] [Turbo Performance]

Maximum CPU Core Temperature [Auto]

This item allows you to set the maximum allowable temperature for CPU cores. The CPU throttles or shuts down when it reaches its maximum temperature to prevent damaging the CPU cores.

Configuration options: [Auto] [60] - [120]

We recommend that you set the temperature 105° C or lower. High temperatures may damage the CPU permanently.

Active Processor Cores

The items in this menu allow you to enable/disable the cores of your CPU.

Active Processor Core (0-5) [Enabled]

Configuration options: [Enabled] [Disabled]

CPU Power Management Configuration

The items in this menu allow you to manage and configure the CPU's power.

Enhanced Intel SpeedStep Technology [Enabled]

This item allows your system to adjust the CPU's voltage and cores frequency, resulting in decreased power consumption and heat production.

[Disabled]	The CPU runs at its default speed.
[Enabled]	The system controls the CPU speed.

Turbo Mode [Enabled]

This item allows you to automatically set the CPU cores to run faster than the base operating frequency when it is below the operating power, current and temperature specification limit.

Configuration options: [Enabled] [Disabled]

CPU states [Auto]

This item allows you to set the power saving of the CPU states.

Configuration options: [Auto] [Disabled] [Enabled]

The following items appear only when you set the CPU states to **[Enabled]**.

Enhanced C1 state [Enabled]
This item allows your CPU to reduce power consumption when the system is in idle mode.

Configuration options: [Enabled] [Disabled]

CPU C3 Report [Enabled]
This item allows you to disable or enable the CPU C3 report to the operating system.

Configuration options: [Enabled] [Disabled]

CPU C6 Report [Enabled]
This item allows you to disable or enable the CPU C6 report to the operating system.

Configuration options: [Enabled] [Disabled]

Package C State limit [Auto]
This item allows you to set the a C-state support for the CPU package.
Configuration options: [Auto] [C0/C1 state] [C2 state] [C6 (non Retention) state] [C6 (Retention) state]

3.6.2 PCH Configuration

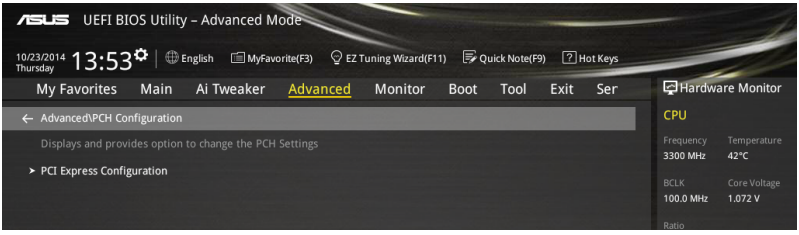

PCI Express Configuration

This item allows you to configure the PCI Express slots.

PCIe Speed [Auto]

This item allows your system to automatically select the PCI Express port speed. When set to [Gen1], the PCI-E port runs at PCI-E 1.0 speed. When set to [Gen2], the PCI-E port runs at PCI-E 2.0 speed.

Configuration options: [Auto] [Gen1] [Gen2]

Chapter 3

3.6.3 PCH Storage Configuration

While entering Setup, the BIOS automatically detects the presence of SATA devices. The SATA Port items show **Not Present** if no SATA device is installed to the corresponding SATA port.

Scroll down to display the other BIOS items.

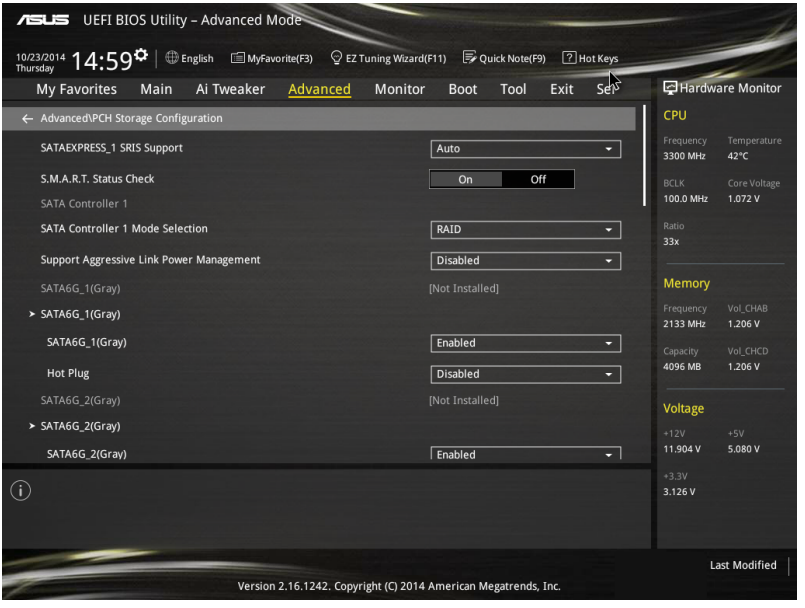

SATAExpress_1 SRIS Support [Auto]

When set to **[Auto]**, this item allows the system to automatically adjust the SRIS (Separate Reference Clock Independent Spread Spectrum Clocking Architecture) support for connected SATA Express devices. Set this item to **[Disabled]** to activate ASUS RUNWAY SATA Express bridge card

Configuration options: [Auto] [Disabled]

S.M.A.R.T. Status Check [On]

S.M.A.R.T. (Self-Monitoring, Analysis and Reporting Technology) is a monitoring system that shows a warning message during POST (Power-on Self Test) when an error occurs in the hard disks.

Configuration options: [On] [Off]

SATA Controller 1 Mode Selection [AHCI]

This item allows you to set the SATA configuration.

[Disabled] Disables the SATA function.

[IDE Mode] Set to [IDE Mode] when you want to use the Serial ATA hard disk drives as Parallel ATA physical storage devices.

[AHCI Mode] Set to [AHCI Mode] when you want the SATA hard disk drives to use the AHCI (Advanced Host Controller Interface). The AHCI allows the onboard storage driver to enable advanced Serial ATA features that increases storage performance on random workloads by allowing the drive to internally optimize the order of commands.

[RAID Mode] Set to [RAID Mode] when you want to create a RAID configuration from the SATA hard disk drives.

The following item appears only when you set the SATA Mode Selection to **[IDE]**.

SATA6G_1-6 (Gray)

These items display all connected devices to SATA6G ports. If some ports are not used, these items show **[Not Installed]**.

SATA Controller 2 Mode Selection [AHCI]

This item allows you to set the SATA configuration.

[Disabled] Disables the SATA function.

[IDE Mode] Set to [IDE Mode] when you want to use the Serial ATA hard disk drives as Parallel ATA physical storage devices.

[AHCI Mode] Set to [AHCI Mode] when you want the SATA hard disk drives to use the AHCI (Advanced Host Controller Interface). The AHCI allows the onboard storage driver to enable advanced Serial ATA features that increases storage performance on random workloads by allowing the drive to internally optimize the order of commands.

Due to Intel® chipset specification, the SATA ports from SATA controller 2 does not support Intel® Rapid Storage Technology including RAID configuration.

The following item appears only when you set the SATA Mode Selection to **[IDE]**.

SATA6G_7-10 (Black)

These items display all connected devices to SATA6G ports. If some ports are not used, these items show **[Not Installed]**.

Support Aggressive Link Power Management [Disabled]

This item is designed for LPM (link power management) support with a better energy saving conditions. When disabled, the hot plug function of SATA ports are disabled.

Configuration options: [Disabled] [Enabled]

Hot Plug [Disabled] (SATA6G_1-6 (Gray) / SATA6G_7-10 (Black))

These items allow you to enable/disable SATA Hot Plug Support.

Configuration options: [Disabled] [Enabled]

3.6.4 System Agent Configuration

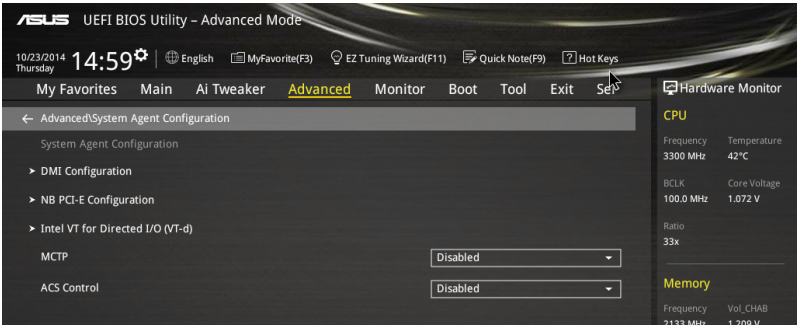

DMI Configuration

The item in this menu allows you configure the Direct Media Interface.

DMI Gen 2 [Enabled]

This item allows you to run the DMI at PCI-E 2.0 speed.
Configuration options: [Enabled] [Disabled]

NB PCI-E Configuration

The items in this menu allow you to select the operating speeds of the PCIe slots.

PCIEX16_1 Link Speed [Auto]

This item allows you to select the operating speed of the PCIEX16_1 slot.
Configuration options: [Auto] [Gen1] [Gen2] [Gen3]

PCIEX16_2 Link Speed [Auto]

This item allows you to select the operating speed of the PCIEX16_2 slot.
Configuration options: [Auto] [Gen1] [Gen2] [Gen3]

PCIEX16_3 Link Speed [Auto]

This item allows you to select the operating speed of the PCIEX16_3 slot.
Configuration options: [Auto] [Gen1] [Gen2] [Gen3]

PCIEX16_4 Link Speed [Auto]

This item allows you to select the operating speed of the PCIEX16_4 slot.
Configuration options: [Auto] [Gen1] [Gen2] [Gen3]

PCIEX16_5 Link Speed [Auto]

This item allows you to select the operating speed of the PCIEX16_5 slot.
Configuration options: [Auto] [Gen1] [Gen2] [Gen3]

Intel VT for Directed I/O (VT-d)

The item in this menu allows you to configure the Intel® Virtualization Technology for Directed I/O (VT-d).

Intel VT for Directed I/O (VT-d) [Disabled]

This item allows you to enable/disable the Intel® Virtualization Technology for Directed I/O (VT-d) by reporting the I/O device assignment to VMM via the DMAR ACPI Tables.

Configuration options: [Enabled] [Disabled]

MCTP [Disabled]

This item allows you to enable/disable Management Component Transport Protocol.

Configuration options: [Enabled] [Disabled]

ACS Control [Disabled]

This item allows you to enable/disable ACS Control.

Configuration options: [Enabled] [Disabled]

3.6.5 USB Configuration

The items in this menu allow you to change the USB-related features.

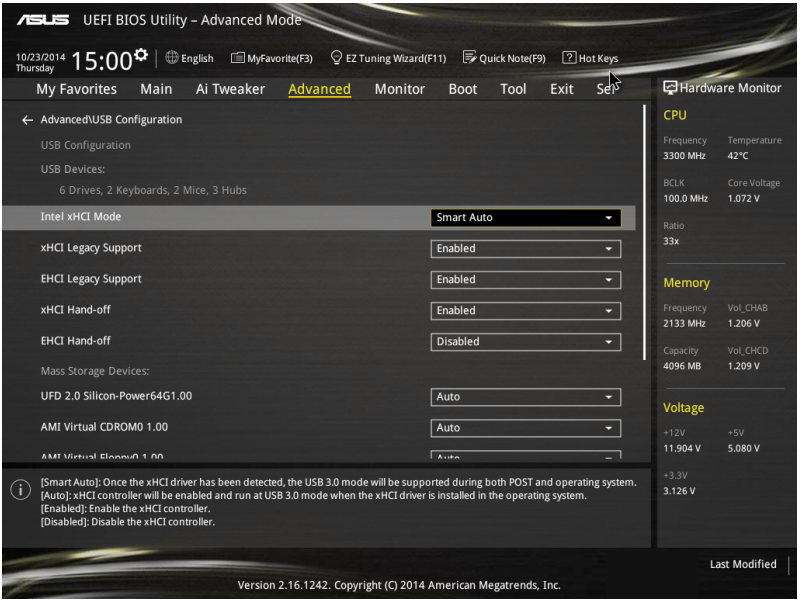

The **Mass Storage Devices** item shows the auto-detected values. If no USB device is detected, the item shows **None**.

Intel xHCI Mode [Smart Auto]

[Auto]	The xHCI is automatically enabled and runs at USB 3.0 mode when the xHCI driver is installed in the operating system.
[Smart Auto]	Upon detection, the xHCI driver supports the USB 3.0 mode during both POST and operating system.
[Enabled]	Enables the xHCI controller.
[Disabled]	Disables the xHCI controller.

xHCI Legacy USB Support [Enabled]

[Enabled]	Your system supports the USB 3.0 devices in legacy operating systems.
[Disabled]	Your USB 3.0 devices can be used for BIOS setup only and cannot be recognized in the boot devices list.
[Auto]	Your system automatically detects the presence of USB3.0 devices at startup. If any USB 3.0 devices are detected, the xHCI legacy USB support is enabled.

EHCI Legacy USB Support [Enabled]

[Enabled] Your system supports the USB 2.0 devices in legacy operating systems.

[Disabled] Your USB 2.0 devices can be used for BIOS setup only and cannot be recognized in the boot devices list.

[Auto] Your system automatically detects the presence of USB 2.0 devices at startup. If any USB 2.0 devices are detected, the xHCI legacy USB support is enabled.

xHCI Hand-off [Disabled]

[Enabled] Enables the support for operating systems without an xHCI hand-off feature.

[Disabled] Disables the xHCI Hand-off support.

EHCI Hand-off [Disabled]

[Enabled] Enables the support for operating systems without an EHCI hand-off feature.

[Disabled] Disables the EHCI Hand-off support.

Mass Storage Devices

AMI Virtual CDROM 1.00 [Auto] / AMI Virtual Floppy0 1.00 [Auto] / AMI Virtual HDisk0 1.00 [Auto] / AMI Virtual CDROM1 1.00 [Auto] / AMI Virtual Floppy1 1.00 [Auto] / AMI Virtual HDisk1 1.00 [Auto]

These items describe the emulation type of each storage device. Select [Auto] to emulate the device according to its media format.

Configuration options: [Auto] [Floppy] [Forced FDD] [Hard Disk] [CD-ROM]

- The optical drives are emulated as [CD-ROM].
- Drives without media are emulated according to their drive type.

USB Single Port Control

This item allows you to enable or disable the individual USB ports.

Refer to section **1.2.2 Motherboard layout** for the location of the USB ports.

3.6.6 Platform Misc Configuration

The items in this menu allow you to configure the platform-related features.

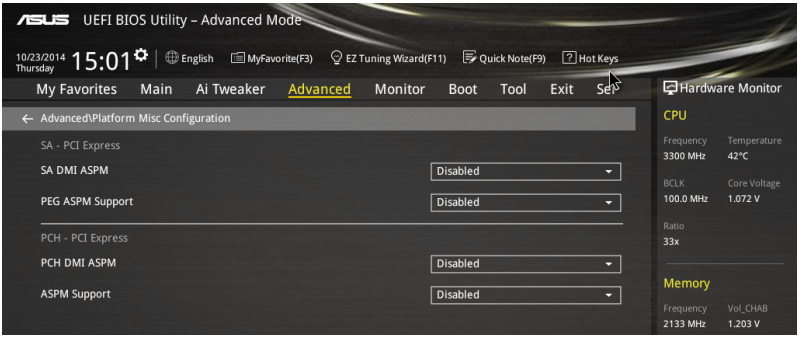

SA - PCI Express

SA SMI ASPM [Disabled]

This item allows you to enable/disable the ASPM (L1) support for the downstream devices.

Configuration options: [Auto] [Disabled] [L1 only]

PEG ASPM Support [Disabled]

This item allows you to enable/disable the ASPM support for the downstream devices.

Configuration options: [Disabled] [L1 only]

PCH - PCI Express

PCH DMI ASPM [Disabled]

This item allows you to enable/disable the PCH DMI ASPM Setting.

Configuration options: [Disabled] [Enabled]

ASPM Support [Disabled]

This item allows you to enable/disable the ASPM support for all downstream devices.

Configuration options: [Disabled] [L1 only]

3.6.7 Onboard Devices Configuration

Scroll down to view the other BIOS items.

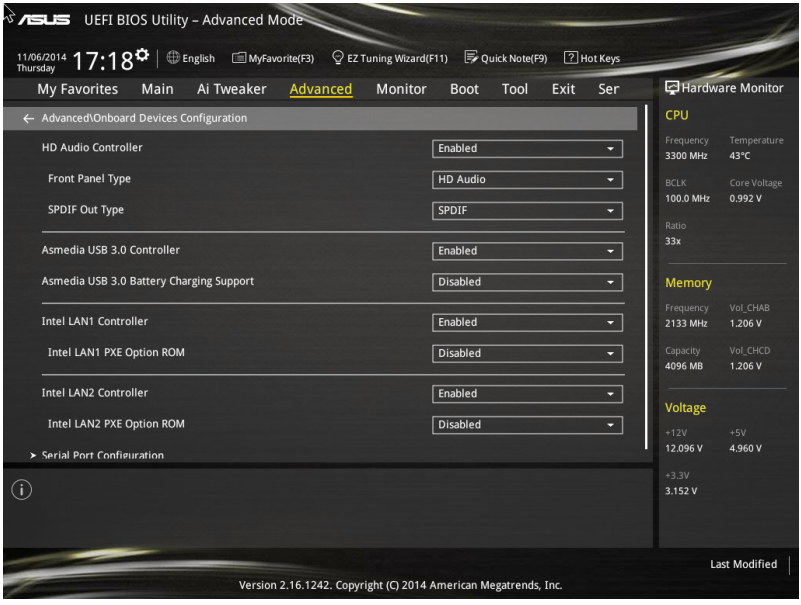

HD Audio Controller [Enabled]

This item allows you to use the Azalia High Definition Audio Controller

Configuration options: [Disabled] [Enabled]

The following items appear only when you set the HD Audio Controller to **[Enabled]**.

Front Panel Type [HD Audio]

This item allows you to set the front panel audio connector (AAFP) mode to legacy AC'97 or high-definition audio depending on the audio standard that the front panel audio module supports.

[HD Audio] Sets the front panel audio connector (AAFP) mode to high definition audio.

[AC97] Sets the front panel audio connector (AAFP) mode to legacy AC'97.

SPDIF Out Type [SPDIF]

[SPDIF] Sets to an SPDIF audio output.

[HDMI] Sets to an HDMI audio output.

Chapter 3

ASMedia USB 3.0 Controller [Enabled]

This item allows you to enable/disable the ASMedia® USB 3.0 controller of your system.

Configuration options: [Disabled] [Enabled]

The following item appears only when you set the ASMedia USB 3.0 Controller to **[Enabled]**.

ASMedia USB 3.0 Battery Charging Support [Disabled]

This item allows you to enable/disable the ASMedia® USB 3.0 battery charging support of your system.

Configuration options: [Disabled] [Enabled]

Intel LAN Controller (LAN1-LAN2) [Enabled]

This item allows you to enable or disable the Intel LAN1/2 controllers.

Configuration options: [Disabled] [Enabled]

The following item appears only when you set the Intel LAN Controller to **[Enabled]**.

Intel PXE OPROM (LAN1-LAN2) [Disabled]

This item allows you to enable/disable the PXE OptionRom of the Intel® LAN controller.

Configuration options: [Enabled] [Disabled]

Serial Port Configuration

The items in this menu allows you to set the parameters of the serial port.

This items in this menu works only if a serial port connector is installed on the motherboard.

Serial Port [On]

This item allows you to enable/disable the serial port.

Configuration options: [On] [Off]

Change Settings [Auto]

This item allows you to select an optimal setting for Super IO device.

Configuration options: [IO=3F8h; IRQ=4;] [IO=2F8h; IRQ=3] [IO=3E8h; IRQ=4] [IO=2E8h; IRQ=3]

3.6.8 APM Configuration

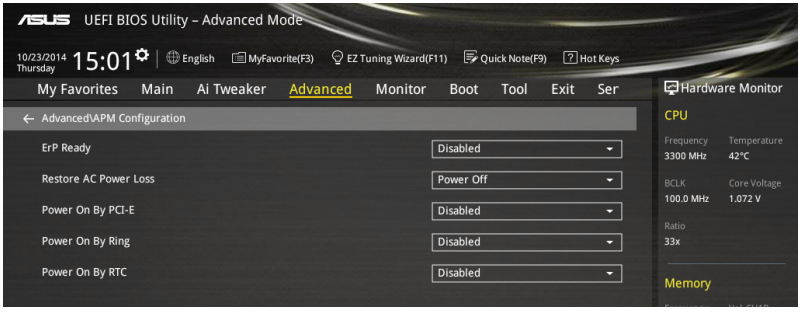

ErP Ready [Disabled]

This item allows you to switch off some power at S4+S5 or S5 to get the system ready for ErP requirement. When set to **[Enabled]**, all other PME options are switched off.

Configuration options: [Disabled] [Enabled (S4+S5] [Enabled (S5)]

Restore AC Power Loss [Power Off]

This item allows your system to go to ON state, OFF state, or both states after an AC power loss. When setting your system to [Last State], it goes to the previous state before the AC power loss.

Configuration options: [Power Off] [Power On] [Last State]

Power On By PCI-E/PCI [Disabled]

This item allows you to enable/disable the Wake-on-LAN function of the onboard LAN controller or other installed PCI-E LAN cards.

Configuration options: [Disabled] [Enabled]

Power On By Ring [Disabled]

This item allows you to enable/disable the Power On by Ring feature of your motherboard.

Configuration options: [Disabled] [Enabled]

Power On By RTC [Disabled]

This item allows you to enable/disable the RTC (Real-Time Clock) to generate a wake event and configure the RTC alarm date. When enabled, you can set the days, hours, minutes, or seconds to schedule an RTC alarm date.

Configuration options: [Disabled] [Enabled]

3.6.9 Network Stack Configuration

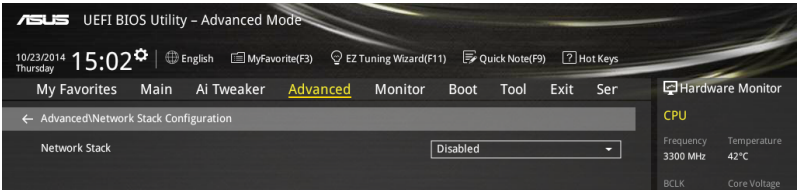

Network stack [Disabled]

This item allows you to disable/enable the UEFI network stack.

Configuration options: [Disabled] [Enabled]

The following item appears only when you set the Network Stack to **[Enabled]**.

Ipv4/Ipv6 PXE Support [Enabled]

This item allows you to enable/disable the Ipv4/Ipv6 PXE wake event.

Configuration options: [Disabled] [Enabled]

Chapter 3

3.7 Monitor menu

The Monitor menu displays the system temperature/power status, and allows you to change the fan settings.

Scroll down to display the other BIOS items.

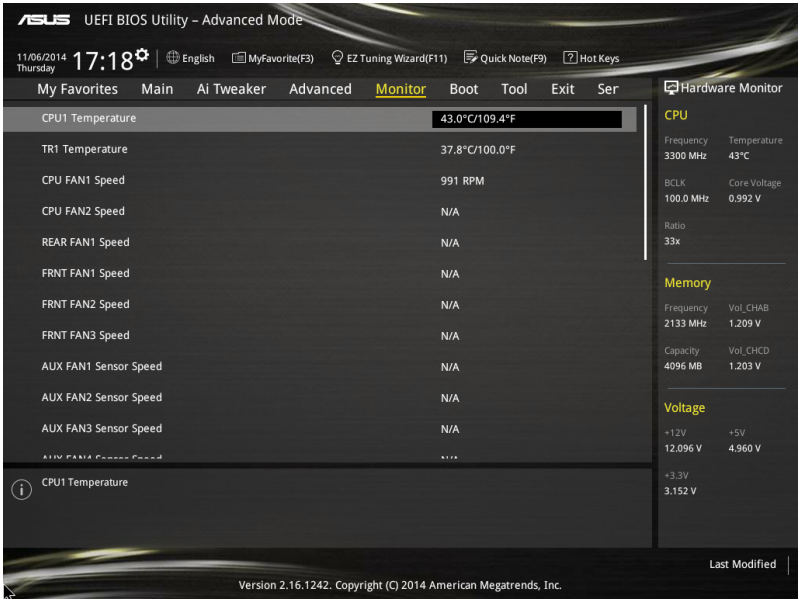

CPU1 Temperature / TR1 Temperature [xxx°C/xxx°F]

The onboard hardware monitor automatically detects and displays the CPU and the motherboard temperatures. Select **[Ignore]** if you do not wish to display the detected temperatures.

CPU FAN1-2 Speed [xxxx RPM] or [Ignore] / [N/A], REAR FAN1 Speed [xxxx RPM] or [Ignore], FRNT FAN1-3 Speed [xxxx RPM] or [Ignore] / [N/A], AUX FAN1-4 Speed [xxxx RPM] or [Ignore] / [N/A]

The onboard hardware monitor automatically detects and displays the CPU, chassis, and power fan speed in rotations per minute (RPM). If the fan is not connected to the motherboard, the field shows N/A. Select **[Ignore]** if you do not wish to display the detected speed.

+VCCIO, +VCORE1, +VDDQ_AB, +VDDQ_CD, +5VSB, +5V, +12V, +3.3V, VBAT, +3.3VSB Voltages

The onboard hardware monitor automatically detects the voltage output through the onboard voltage regulators. Select **[Ignore]** if you do not want to detect this item.

CPU FAN 1&2, REAR FAN1, FRNT FAN2, FRNT FAN2&3 modes

This item allows you to select a specific speed for your CPU and front fans.

Configuration options: [Generic Speed] [High Speed] [Full Speed] [Manual]

The following item appears only when you set the CPU FAN 1&2 and FRNT FAN1 mode to **[Manual]**.

Duty% [50]

This item allows you to set a duty cycle percentage to meet the thermal requirement for your system. Use the <+> or <-> keys to adjust the value. The values range from 0 to 100 with an interval of 5.

3.8 Boot menu

The Boot menu items allow you to change the system boot options.

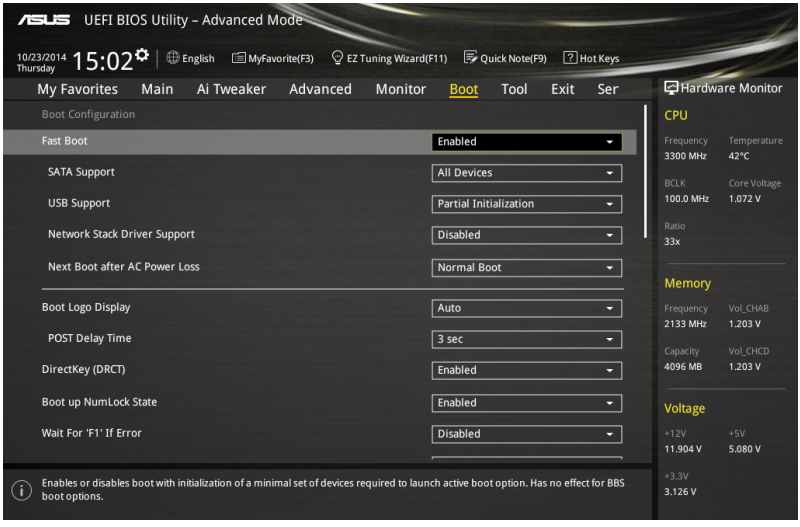

Boot Configuration

Fast Boot [Enabled]

[Disabled] This item allows your system to go back to its normal boot speed.

[Enabled] This item allows your system to accelerate the boot speed.

The following items appear only when you set the Fast Boot to **[Enabled]**.

SATA Support [All Devices]

[All Devices] All devices connected to SATA ports are available during POST. This process extends the POST time.

[Hard Drive Only] Only hard drives connected to SATA ports are detected during POST.

[Boot Drive Only] Only boot drives connected to a SATA ports are detected during POST.

USB Support [Partial Initialization]

[Disabled] All USB devices will not be available until OS boot up for a fastest POST time.

[Full Initialization] All USB devices will be available during POST. This process will extend the POST time.

[Partial Initialization] For a faster POST time, only USB ports with keyboard and mouse connections will be detected.

Network Stack Driver Support [Disabled]

[Disabled] Select to skip the network stack driver from loading during POST.

[Enabled] Select to load the network stack driver during POST.

Next Boot after AC Power Loss [Normal Boot]

[Normal Boot] Returns to normal boot on the next boot after an AC power loss.

[Fast Boot] Accelerates the boot speed on the next boot after an AC power loss.

Boot Logo Display [Auto]

[Auto] Sets the boot logo to display during POST.

[Full Screen] Sets the boot logo display in full screen during POST.

[Disabled] Disables the boot logo display during POST.

The following item appears only when you set the Boot Logo Display to **[Auto]** and **[Full Screen]**.

Post Delay Time [3 sec]

This item allows you to select a desired additional POST waiting time to easily enter the BIOS Setup. You can only execute the POST delay time during normal boot. The values range from 0 to 10 seconds.

This feature only works when set under normal boot.

The following items appear only when you set the Boot Logo Display to **[Disabled]**.

Post Report [5 sec]

This item allows you to select a desired POST report waiting time.
Configuration options: [1 sec] - [10 sec] [Until Press ESC]

DirectKey (DRCT) [Enabled]

[Disabled] Disables the DirectKey button. The system will only power on or off when you press the DirectKey button.

[Enabled] Allows the system to power on and go to the BIOS Setup directly when you press the Reset button. Connect the 2-pin connector of the chassis reset buton cable to the onboard DRCT header.

Bootup NumLock State [Enabled]

This item allows you to enable/disable power-on state of the NumLock.

Configuration options: [Enabled] [Disabled]

Wait For 'F1' If Error [Enabled]

This item allows your system to wait for the <F1> key to be pressed when error occurs.

Configuration options: [Disabled] [Enabled]

Option ROM Messages [Force BIOS]

This item allows you to set the display mode for Option ROM.

Configuration options: [Force BIOS] [Keep Current]

INT19 Trap Response [Immediate]

[Immediate] Executes the trap for INT19 immediately.

[Postponed] Executes the trap during legacy boot.

Above 4G Decoding [Disabled]

This item allows you to decode the 64-bit capable devices above 4G address space. Ensure that your system supports 64-bit PCI decoding.

Configuration options: [Disabled] [Enabled]

CSM (Compatibility Support Module)

This item allows you to configure the CSM (Compatibility Support Module) items to fully support the various VGA, bootable devices and add-on devices for better compatibility.

Launch CSM [Enabled]

[Auto] The system automatically detects the bootable devices and the add-on devices.

[Enabled] For better compatibility, enable the CSM to fully support the non-UEFI driver add-on devices or the Windows® UEFI mode.

[Disabled] Disables the CSM to fully support the non-UEFI driver add-on devices or the Windows® UEFI mode.

The following items appear only when you set the Launch CSM to **[Enabled]**.

Boot Device Control [UEFI and Legacy OpROM]
This item allows you to select the type of devices that you want to boot.

Configuration options: [UEFI and Legacy OpROM] [Legacy OpROM only] [UEFI only]

Boot from Network Devices [Legacy OpROM first]
This item allows you to select the type of network devices that you want to launch.

Configuration options: [Legacy only] [UEFI driver first] [Ignore]

Boot from Storage Devices [Legacy OpROM first]
This item allows you to select the type of storage devices that you want to launch.

Configuration options: [Legacy only] [UEFI driver first] [Ignore]

Boot from PCI-E/PCI Expansion Devices [Legacy OpROM first]
This item allows you to select the type of PCIe/PCI expansion devices that you want to launch.

Configuration options: [Legacy only] [UEFI driver first]

Secure Boot

This item allows you to configure the Windows® Secure Boot settings and manage its keys to protect the system from unauthorized access and malwares during POST.

OS Type [Windows UEFI Mode]

[Windows UEFI Mode]	This item allows you to select your installed operating system. Execute the Microsoft® Secure Boot check. Only select this option when booting on Windows® UEFI mode or other Microsoft® Secure Boot compliant OS.
[Other OS]	Get the optimized function when booting on Windows® non-UEFI mode. Microsoft® Secure Boot only supports Windows® UEFI mode.

Key Management

This item allows you to manage the Secure Boot keys.

Install Default Secure Boot keys
This item allows you to immediately load the default Security Boot keys, Platform key (PK), Key-exchange Key (KEK), Signature database (db), and Revoked Signatures (dbx). When the default Secure boot keys are loaded, the PK state will change from Unloaded mode to loaded mode.

Clear Secure Boot keys
This item appears only when you load the default Secure Boot keys. This item allows you to clear all default Secure Boot keys.

Save Secure Boot Keys
This item allows you to save the PK (Platform Keys) to a USB storage device.

PK Management

The Platform Key (PK) locks and secures the firmware from any permissible changes. The system verifies the PK before your system enters the OS.

Delete PK
This item allows you to delete the PK from your system. Once the PK is deleted, all the system's Secure Boot keys will not be active.

Configuration options: [Yes] [No]

Load PK from File
This item allows you to load the downloaded PK from a USB storage device.

The PK file must be formatted as a UEFI variable structure with time-based authenticated variable.

KEK Management

The KEK (Key-exchange Key or Key Enrollment Key) manages the Signature database (db) and Revoked Signature database (dbx).

Key-exchange Key (KEK) refers to Microsoft® Secure Boot Key-Enrollment Key (KEK).

Delete the KEK
This item allows you to delete the KEK from your system.

Configuration options: [Yes] [No]

Load Default KEK
This item allows you to load the downloaded KEK from a USB storage device.

Append Default KEK
This item allows you to load the additional KEK from a storage device for an additional db and dbx loaded management.

The KEK file must be formatted as a UEFI variable structure with time-based authenticated variable.

DB Management

The db (Authorized Signature database) lists the signers or images of UEFI applications, operating system loaders, and UEFI drivers that you can load on the single computer.

Delete the db
This item allows you to delete the db file from your system.

Configuration options: [Yes] [No]

Load Default db
This item allows you to load the downloaded db from a USB storage device.

Append Default db
This item allows you to load the additional db from a storage device so that more images can be loaded securely.

The db file must be formatted as a UEFI variable structure with time-based authenticated variable.

DBX Management

The dbx (Revoked Signature database) lists the forbidden images of db items that are no longer trusted and cannot be loaded.

Delete the dbx
This item allows you to delete the dbx file from your system.

Load Default dbx
This item allows you to load the downloaded dbx from a USB storage device.

Configuration options: [Yes] [No]

Append Default dbx
This item allows you to load the additional dbx from a storage device so that more db's images cannot be loaded.

The dbx file must be formatted as a UEFI variable structure with time-based authenticated variable.

Boot Option Priorities

These items specify the boot device priority sequence from the available devices. The number of device items that appears on the screen depends on the number of devices installed in the system.

- To access Windows® OS in Safe Mode, press <F8 > after POST (Windows® 8 not supported).
- To select the boot device during system startup, press <F8> when ASUS Logo appears.

Boot Override

These item displays the available devices. The number of device items that appear on the screen depends on the number of devices installed in the system. Click an item to start booting from the selected device.

3.9 Tool menu

The Tool menu items allow you to configure options for special functions. Select an item then press <Enter> to display the submenu.

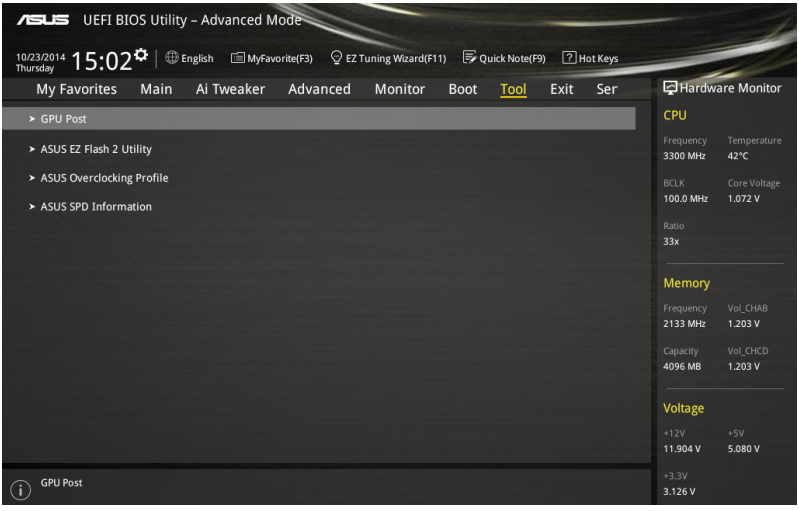

GPU Post

This item shows the installed graphics cards in your motherboard. It also shows the recommended number of graphics card to install to your motherboard for best performance.

3.9.1 ASUS EZ Flash 2 Utility

This item allows you to run ASUS EZ Flash 2. When you press <Enter>, a confirmation message appears. Use the left/right arrow key to select between [Yes] or [No], then press <Enter> to confirm your choice.

For more details, refer to section **3.12.2 ASUS EZ Flash 2**.

Chapter 3

3.9.2 ASUS O.C. Profile

This item allows you to store or load multiple BIOS settings.

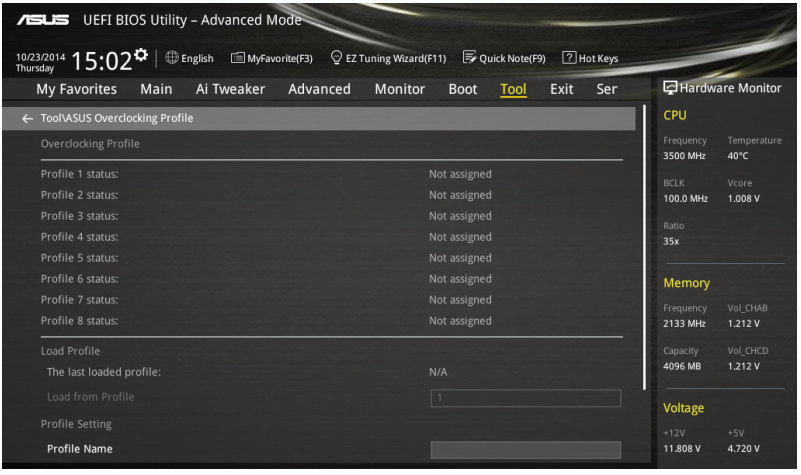

Load from Profile

This item allows you to load the previous BIOS settings saved in the BIOS Flash. Key in the profile number that saved your BIOS settings, press <Enter>, and then select **Yes**.

- DO NOT shut down or reset the system while updating the BIOS to prevent the system boot failure!
- We recommend that you update the BIOS file only coming from the same memory/ CPU configuration and BIOS version.

Profile Name

This item allows you to key in a profile name.

Save to Profile

This item allows you to save the current BIOS settings to the BIOS Flash, and create a profile. Key in a profile number from one to eight, press <Enter>, and then select **Yes**.

Load/Save Profile from/to USB Drive

This item allows you to load or save profile from your USB drive, load and save profile to your USB drive.

3.9.3 ASUS SPD Information

This item allows you to view the DRAM SPD information.

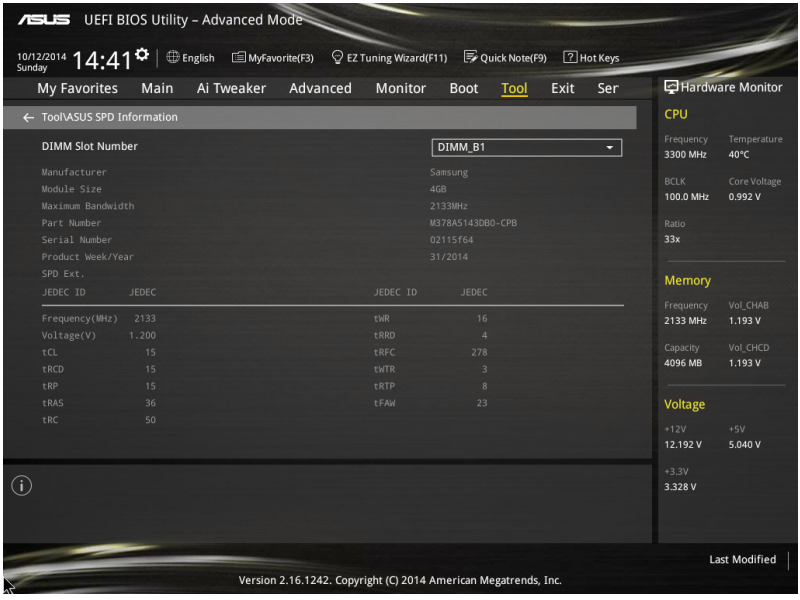

Chapter 3

3.10 Exit menu

The Exit menu items allow you to load the optimal default values for the BIOS items, and save or discard your changes to the BIOS items. You can access the EZ Mode from the Exit menu.

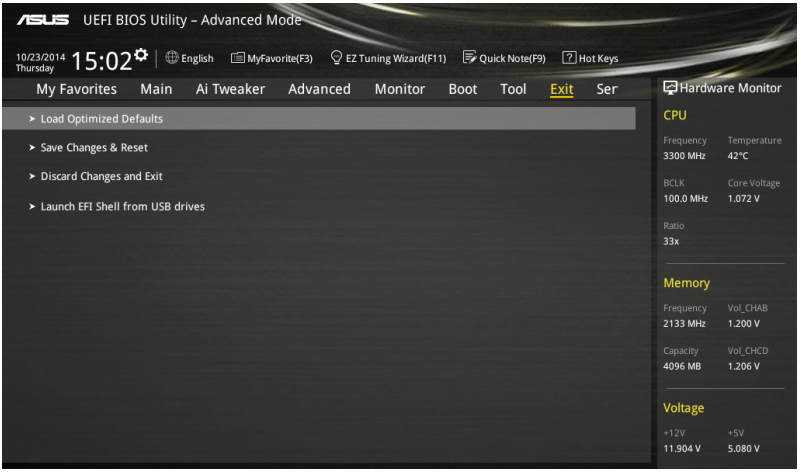

Load Optimized Defaults

This option allows you to load the default values for each of the parameters on the Setup menus. When you select this option or if you press <F5>, a confirmation window appears. Select **OK** to load the default values.

Save Changes & Reset

Once you are finished making your selections, choose this option from the Exit menu to ensure the values you selected are saved. When you select this option or if you press <F10>, a confirmation window appears. Select **OK** to save changes and exit.

Discard Changes & Exit

This option allows you to exit the Setup program without saving your changes. When you select this option or if you press <Esc>, a confirmation window appears. Select **Yes** to discard changes and exit.

Launch EFI Shell from USB drives

This option allows you to attempt to launch the EFI Shell application (shellx64.efi) from one of the available filesystem devices.

3.11 Server Management menu

The Server Management menu displays the server management status and allows you to change its settings.

OS Watchdog Timer [Disabled]

This item allows you to start a BIOS timer which can only be shut off by Intel® Management Software after the OS loads.

Configuration options: [Disabled] [Enabled]

The following items appear only when you set the Launch CSM to **[Enabled]**.

OS Wtd Timer Timeout [10 minutes]

This item allows you to configure the duration of the OS Boot Watchdof timer.

Configuration options: [5 minutes] [10 minutes] [15 minutes] [20 minutes]

OS Wtd Timer Policy [Reset]

This item allows you to configure how the system responds if the OS Boot Watchdog Timer expires.

Configuration options: [Do Nothing] [Reset] [Power Down]

Serial Mux [Disabled]

This item allows you to enable/disable the Serial Mux Configuration

3.11.1 System Event Log

The items in this menu allow you to change the SEL event log configuration.

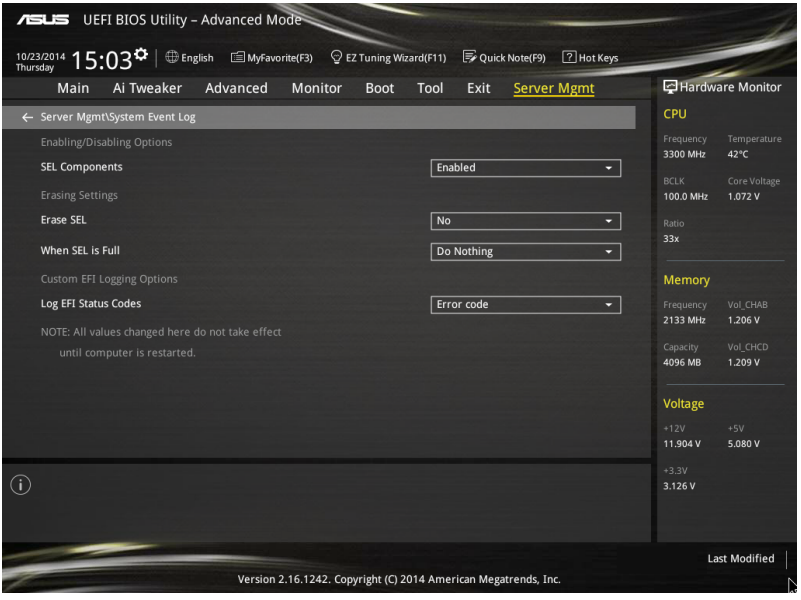

SEL Components [Enabled]

The items in this menu allow you to enable/disable all features of System Event Logging during boot.

Configuration options: [Disabled] [Enabled]

- The following items appear only when you set the SEL components item to **[Enabled]**.
- All changes made will take effect when restarting your system.

Erase SEL [No]

This item allows you to select an option of erasing SEL.
Configuration options: [No] [Yes, On next reset] [Yes, On every reset]

When SEL is Full [Do Nothing]

This item allows you to select a reaction to a full SEL.
Configuration options: [Do Nothing] [Erase Immediately]

Log EFI Status Codes [Error code]

This item allows you to disable the logging of EFI status codes, logging only error code or progress code, or both codes.
Configuration options: [Disabled] [Both] [Error code] [Progress code]

3.11.2 BMC Network configuration

The items in this configuration allow you to configure the BMC network parameters. The items are blank if no BMC card is detected by the system.

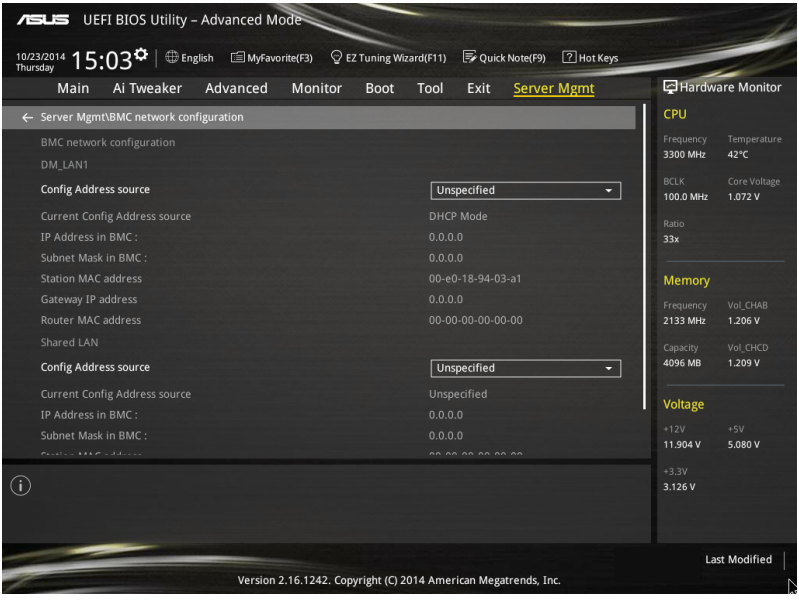

Config Address source [Unspecified]

This item allows you to configure the LAN channel parameters statistically or dynamically (by BIOS or BMC). Unspecified option does not modify any BMC network parameters during BIOS phase.

Configuration options: [Unspecified] [Static] [DynamicBmcDhcp]

3.11.3 View System Event Log

This item allows you to view the system event log records.

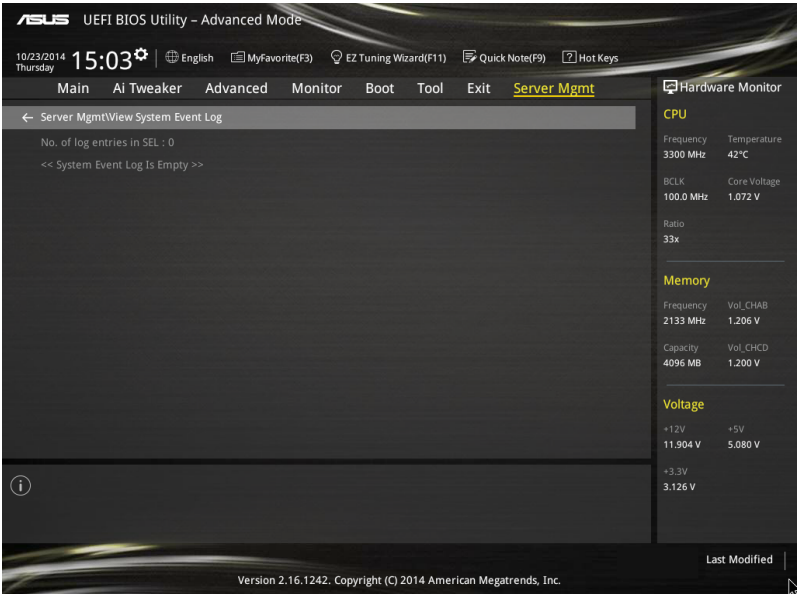

Chapter 3

3.12 Updating BIOS

The ASUS website publishes the latest BIOS versions to provide enhancements on system stability, compatibility,and performance. However, BIOS updating is potentially risky. If there is no problem using the current version of BIOS, DO NOT manually update the BIOS. Inappropriate BIOS updating may result to system's failure to boot. Carefully follow the instructions in this chapter to update your BIOS when necessary.

Visit http://www.asus.com to download the latest BIOS file for this motherboard.

The following utilities allow you to manage and update the motherboard BIOS setup program.

1. EZ Update: Updates the BIOS in Windows® environment.
2. ASUS EZ Flash 2: Updates the BIOS using a USB flash drive.
3. ASUS CrashFree BIOS 3: Restores the BIOS using the motherboard support DVD or a USB flash drive when the BIOS file fails or gets corrupted.
4. ASUS BIOS Updater: Updates the BIOS in DOS environment using the motherboard support DVD and a USB flash disk drive.

3.12.1 EZ Update

The EZ Update is a utility that allows you to update the motherboard BIOS in Windows® environment.

- EZ Update requires an Internet connection either through a network or an ISP (Internet Service Provider).
- This utility is available in the support DVD that comes with the motherboard package. Refer to the documentation that came with the support DVD.

3.12.2 ASUS EZ Flash 2

ASUS EZ Flash 2 allows you to update the BIOS without having to use a bootable floppy disk or an OS-based utility.

Before you start using this utility, download the latest BIOS from the ASUS website at www.asus.com.

To update the BIOS using EZ Flash 2:

1. Insert the USB flash disk that contains the latest BIOS file to the USB port.
2. Enter the Advanced Mode of the BIOS setup program. Go to the Tool menu to select ASUS EZ Flash Utility and press <Enter> to enable it.

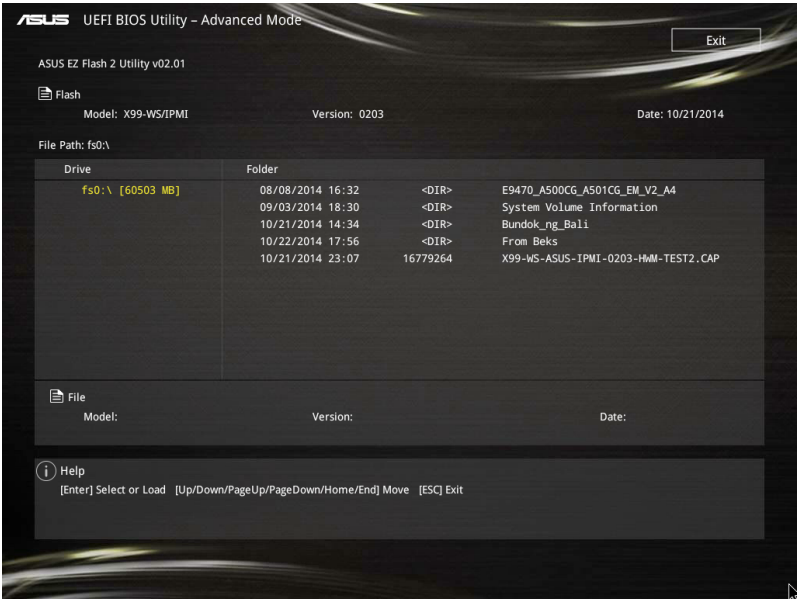

3. Press <Tab> to switch to the Drive field.
4. Press the Up/Down arrow keys to find the USB flash disk that contains the latest BIOS, and then press <Enter>.
5. Press <Tab> to switch to the Folder Info field.
6. Press the Up/Down arrow keys to find the BIOS file, and then press <Enter> to perform the BIOS update process. Reboot the system when the update process is done.

- This function can support devices such as a USB flash disk with FAT 32/16 format and single partition only.
- DO NOT shut down or reset the system while updating the BIOS to prevent system boot failure!

Ensure to load the BIOS default settings to ensure system compatibility and stability. Select the Load Optimized Defaults item under the Exit menu. See section **3.10 Exit Menu** for details.

3.12.3 ASUS CrashFree BIOS 3

The ASUS CrashFree BIOS 3 utility is an auto recovery tool that allows you to restore the BIOS file when it fails or gets corrupted during the updating process. You can restore a corrupted BIOS file using the motherboard support DVD or a USB flash drive that contains the BIOS file.

The BIOS file in the motherboard support DVD may be older than the BIOS file published on the ASUS official website. If you want to use the newer BIOS file, download the file at http://support.asus.com and save it to a USB flash drive.

Recovering the BIOS

To recover the BIOS:

1. Turn on the system.
2. Insert the motherboard support DVD to the optical drive, or the USB flash drive containing the BIOS file to the USB port.
3. The utility automatically checks the devices for the BIOS file. When found, the utility reads the BIOS file and enters ASUS EZ Flash 2 automatically.
4. The system requires you to enter BIOS Setup to recover the BIOS setting. To ensure system compatibility and stability, we recommend that you press <F5> to load default BIOS values.

DO NOT shut down or reset the system while updating the BIOS! Doing so can cause system boot failure!

3.12.4 ASUS BIOS Updater

ASUS BIOS Updater allows you to update the BIOS in DOS environment.

The screen captures used in this section are for reference only and may not be exactly the same as actually shown on your computer screen.

Before updating BIOS

- Prepare the motherboard support DVD and a USB flash drive.
- Download the latest BIOS file and BIOS Updater from http://support.asus.com and save them in your USB flash drive.

NTFS is not supported under DOS environment. Ensure that your USB flash drive is in single partition and in FAT32/16 format.

- Turn off the computer.
- Ensure that your computer has a DVD optical drive.

Booting the system in DOS environment

To boot the system in DOS:

1. Insert the USB flash drive with the latest BIOS file and BIOS Updater to the USB port.
2. Boot your computer then press <F8> to launch the select boot device screen.
3. When the select boot device screen appears, insert the Support DVD into the optical drive then select the optical drive as the boot device.

```
Please select boot device:

E1:  ASUS DVD-E818A6T  (4069MB)
 USB DISK 2.0 (3824MB)
UEFI: (FAT)  USB DISK 2.0 (3824MB)
Enter Setup

      ↑ and ↓ to move selection
     ENTER to select boot device
      ESC to boot using defaults
```

4. When the booting message appears, press <Enter> within five (5) seconds to enter FreeDOS prompt.

```
ISOLINUX 3.20 2006-08-26 Copyright (C) 1994-2005 H. Peter Anvin
A Bootable DVD/CD is detected. Press ENTER to boot from the DVD/CD.
If no key is pressed within 5 seconds, the system will boot next priority
device automatically. boot:
```

5. On the FreeDOS prompt, type **d:** then press <Enter> to switch the disk from Drive C (optical drive) to Drive D (USB flash drive).

```
Welcome to FreeDOS (http://www.freedos.org)!
C:/> d:
D:/>
```

Updating the BIOS file

To update the BIOS file:

1. On the FreeDOS prompt, type **bupdater /pc /g** and press <Enter>.

```
D:/> bupdater /pc /g
```

Chapter 3

2. On the BIOS Updater screen, press <Tab> to switch from Files panel to Drives panel then select **D:**.

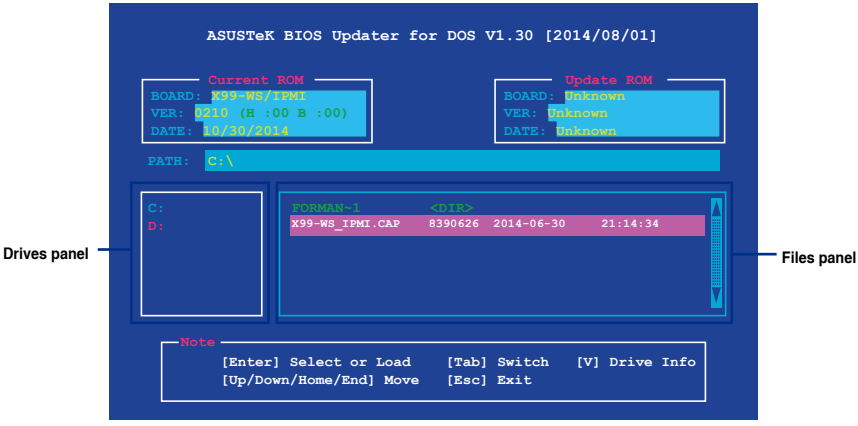

3. Press <Tab> to switch from Drives panel to Files panel then press <Up/Down or Home/End> keys to select the BIOS file and press <Enter>.
4. After the BIOS Updater checks the selected BIOS file, select **Yes** to confirm the BIOS update.

The BIOS Backup feature is not supported due to security regulations.

5. Select **Yes** then press <Enter>. When BIOS update is done, press <ESC> to exit BIOS Updater.
6. Restart your computer.

DO NOT shut down or reset the system while updating the BIOS to prevent system boot failure.

Ensure to load the BIOS default settings to ensure system compatibility and stability. Select **Load Optimized Defaults** item under the **Exit** BIOS menu. See section **3.10 Exit menu** for details.

Chapter 3

Software support

4

4.1 Installing an operating system

- This motherboard supports 32-bit/64-bit Windows® 7, 32-bit/64-bit Windows® 8, and 32-bit/64-bit Windows® 8.1 operating systems (OS).
- Motherboard settings and hardware options vary. The setup procedures presented in this chapter are for reference only. Refer to Windows® operating system documentation for detailed information.

4.2 Support DVD information

The contents of the support DVD are subject to change at any time without notice. Visit the ASUS website at www.asus.com for updates.

4.2.1 Running the support DVD

Ensure that you have an Administrator account before running the support DVD in Windows® 7, Windows® 8, or Windows® 8.1 operating systems.

To run the support DVD:

1. Place the Support DVD into the optical drive.
2. In the **AutoPlay** dialog box, click or tap **Run ASSETUP.EXE**.

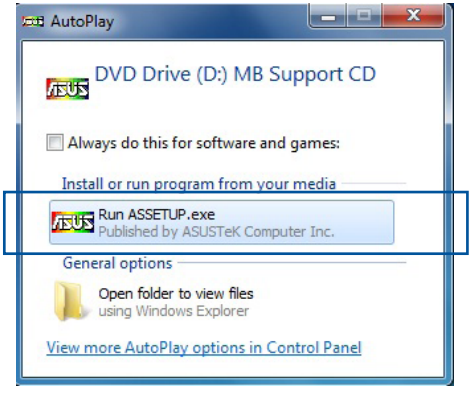

If the **AutoPlay** dialog box does not appear, browse the contents of the support DVD and double-click or tap **\\bin\ASSETUP.EXE** to launch the **ASUS motherboard support DVD** main menu.

Support DVD main menu

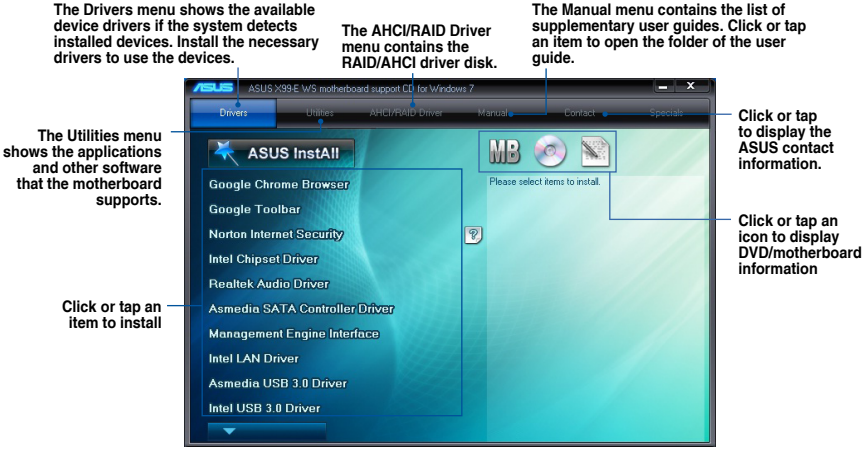

Chapter 4

4.2.2 Obtaining the software manuals

The software manuals are included in the support DVD. Follow the instructions below to get the necessary software manuals.

The software manual files are in Portable Document Format (PDF). Install the Adobe® Acrobat® Reader from the **Utilities** tab before opening the files.

To read about your motherboard's utility guide:

1. Click or tap **Manual** tab > **ASUS Motherboard Utility Guide**.

2. From the **Manual** folder, open the folder of the software manual that you wish to read.

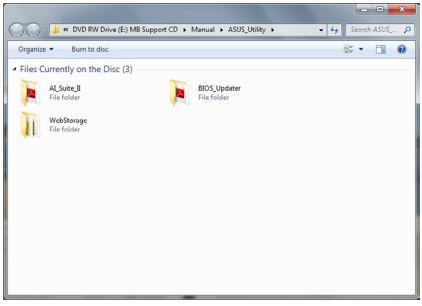

3. Some software manuals are provided in different languages. Open the language's folder to view the software manual.

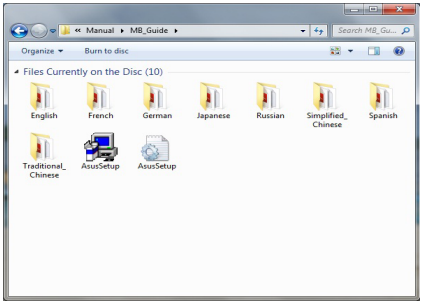

The screenshots in this section are for reference only. The actual software manuals containing in the support DVD vary by models.

Chapter 4

4.3 Software information

Most of the applications in the support DVD have wizards that will conveniently guide you through the installation. View the online help or readme file that came with the software application for more information.

4.4 ASUS Utilities

Your motherboard supports the following utilities:

- Ai Charger+
- USB Charger+
- ASUS Dr. Power

To install these utlities on your computer:

Windows® 7 OS

1. Place the Support DVD into the optical drive.
2. In the **AutoPlay** dialog box, click **Run ASSETUP.exe** then select the **Utilities** tab

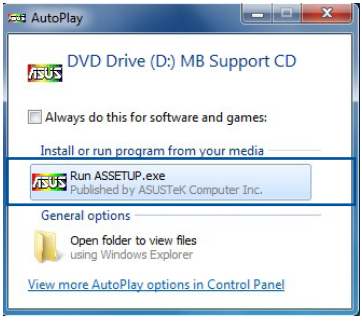

3. From the **Utilities** tab, click the name of the utility then follow the succeeding onscreen instructions.

Chapter 4

Windows® 8 / Windows® 8.1 OS

1. Place the Support DVD into the optical drive then follow onscreen instructions.
2. From the **ASUS motherboard support DVD** main menu, select the **Utilities** tab and click **AI Suite 3**.
3. Follow the succeeding onscreen instructions.

   If the **ASUS motherboard support DVD** main menu did not appear, try the following steps:

   a. Go to the **Start Screen** then click or tap the **Desktop** app.

   b. On the lower left corner of the Desktop, click or tap **File Explorer** then select your DVD drive and tap or double-click the **Setup** application.

Chapter 4

4.4.1 Ai Charger+

Ai Charger+ allows you to fast-charge your portable BC 1.1* mobile devices on your computer's USB port three times faster than the standard USB devices**.

Launching Ai Charger+

From your desktop, click/tap **Ai Charger+**.

Ai Charger+ is available only in selected motherboard models.

Ai Charger+ screen

Tick to enable or disable Ai Charger+

Click or tap to apply the selection

- * Check the manufacturer if your USB device is a Battery Charging Specification 1.1 (BC 1.1) compliant or compatible device.
- ** Actual charging speeds may vary depending on the charging rate and specifications of your USB device.
- To ensure normal charging function, disconnect and reconnect your USB device every time you enable or disable Ai Charger+.
- Ai Charger+ does not support USB hubs, USB extension cables, and generic USB cables.

4.4.2 USB Charger+

USB Charger+ allows you to quick-charge your portable USB devices even if your computer is off, in sleep mode or hibernate mode.

Before using USB Charger+, ensure to disable the ErP Ready item from the **Advanced > APM > ErP Ready** in the Advanced mode of the BIOS Setup program.

Launching USB Charger+

From your desktop, click/tap **USB Charger+**.

USB Charger+ screen

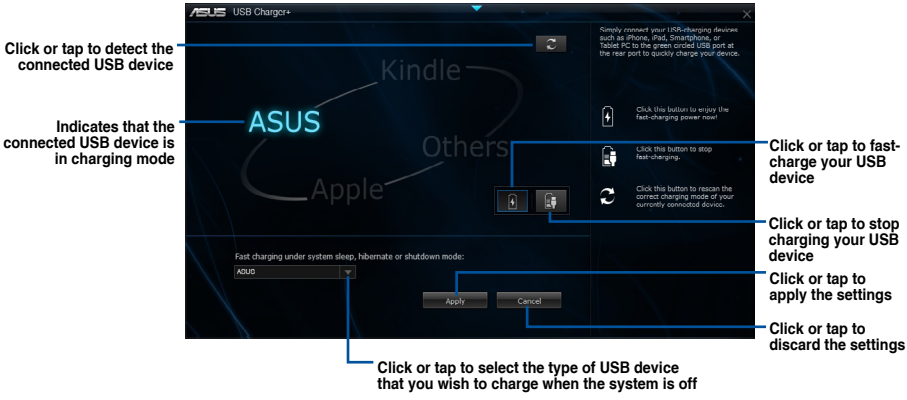

Ensure to connect your USB device into the USB port that supports this utility. Refer to section **2.4.1 Rear I/O connection** of your user guide for more details.

- The USB Charger+ does not support USB hubs and USB extension cables, and generic USB cables.
- The USB Charger+ may not recognize some ASUS devices due to a special design.

Chapter 4

4.4.3 ASUS Dr. Power Utility

ASUS Dr. Power is a monitoring utility that provides notifications when the power supply is unable to provide sufficient power to the system. You can choose to allow continuous notifications or stop messages from appearing until the next time you reboot your computer. The utility is used to monitor changes in the power supplied to the system that may affect performance and system stability.

ASUS Dr. Power Utility runs on your system only when the Dr. Power switch is enabled. (Please refer to **1.2.6 Onboard buttons and switches** for additional details). If the switch is disabled, the Dr. Power icon will not be available on the Windows® notification area.

Installing Dr. Power Utility

To install Dr. Power on your computer:

1. Place the support DVD in the optical drive. The setup window will be displayed if Autorun is enabled on your system.
2. Select the **Utilities** tab and then click or tap **ASUS Dr. Power**.
3. Follow the instructions to complete installation.

Using Dr. Power

After you complete installation, ASUS Dr. Power Utility will appear on the Windows® notification area. Place your mouse pointer over the Dr. Power icon to display current power status.

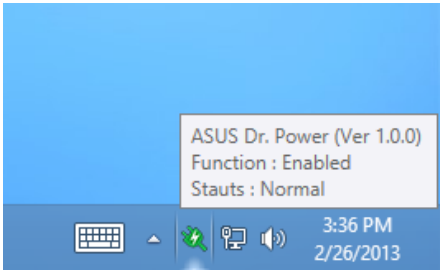

Right-click on the notification area then click **Event Notification** to disable or enable messages from the utility.

Chapter 4

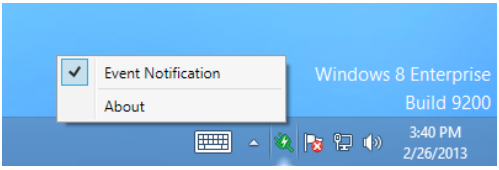

When ASUS Dr. Power detects that your system is running low on power, an event notification pops up to indicate that your power supply requires attention. The message will be displayed for 15 seconds or until you click the Close button. ASUS Dr. Power will notify you of the power status if the same conditions are present on your system.

ASUS Dr. Power can be configured to provide notifications at regular intervals:

- **15 minutes** - Messages will be displayed every 15 minutes.
- **4 hours** - Messages will be displayed every 4 hours.
- **Not showing** - Messages for any power issues will not be displayed.

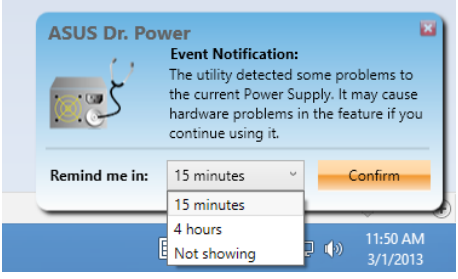

Chapter 4

4.5 Audio configurations

The Realtek® audio CODEC provides 8-channel audio capability to deliver the ultimate audio experience on your computer. The software provides Jack-Sensing function, S/PDIF Out support, and interrupt capability. The CODEC also includes the Realtek® proprietary UAJ® (Universal Audio Jack) technology for all audio ports, eliminating cable connection errors, and giving users plug and play convenience.

Follow the installation wizard to install the Realtek® Audio Driver from the support DVD that came with the motherboard package.

If the Realtek® audio software is correctly installed, you will find the Realtek® HD Audio Manager icon on the taskbar. Double-click or tap on the icon to display the Realtek® HD Audio Manager.

Realtek® HD Audio Manager

A. Realtek® HD Audio Manager with DTS UltraPC II for Windows® 8.1 / Windows® 8 / Windows® 7

Chapter 4

RAID support

5

5.1 RAID configurations

The motherboard supports Intel® Rapid Storage Technology with RAID 0, RAID 1, RAID 10, and RAID 5 solution.

If you want to install a Windows® operating system to a hard disk drive included in a RAID set, you have to create a RAID driver disk and load the RAID driver during OS installation. Refer to section **5.2 Creating a RAID driver disk** for details.

5.1.1 RAID definitions

RAID 0 (Data striping) optimizes two identical hard disk drives to read and write data in parallel, interleaved stacks. Two hard disks perform the same work as a single drive but at a sustained data transfer rate, double that of a single disk alone, thus improving data access and storage. Use of two new identical hard disk drives is required for this setup.

RAID 1 (Data mirroring) copies and maintains an identical image of data from one drive to a second drive. If one drive fails, the disk array management software directs all applications to the surviving drive as it contains a complete copy of the data in the other drive. This RAID configuration provides data protection and increases fault tolerance to the entire system. Use two new drives or use an existing drive and a new drive for this setup. The new drive must be of the same size or larger than the existing drive.

RAID 5 stripes both data and parity information across three or more hard disk drives. Among the advantages of RAID 5 configuration include better HDD performance, fault tolerance, and higher storage capacity. The RAID 5 configuration is best suited for transaction processing, relational database applications, enterprise resource planning, and other business systems. Use a minimum of three identical hard disk drives for this setup.

RAID 10 is data striping and data mirroring combined without parity (redundancy data) having to be calculated and written. With the RAID 10 configuration you get all the benefits of both RAID 0 and RAID 1 configurations. Use four new hard disk drives or use an existing drive and three new drives for this setup.

5.1.2 Installing Serial ATA hard disks

The motherboard supports Serial ATA hard disk drives. For optimal performance, install identical drives of the same model and capacity when creating a disk array.

To install the SATA hard disks for a RAID configuration:

1. Install the SATA hard disks into the drive bays.
2. Connect the SATA signal cables.
3. Connect a SATA power cable to the power connector on each drive.

5.1.3 Setting the RAID item in BIOS

You must enable the RAID function in the BIOS Setup before creating RAID sets using SATA HDDs.

To set the RAID item in BIOS:

1. Enter the BIOS Setup during POST.
2. Go to the **Advanced** menu > **PCH Storage Configuration** > **SATA Controller 1 Mode Selection**, then press <Enter>.
3. Set the SATA Mode item to **[RAID Mode]**.
4. Save your changes, and then exit the BIOS Setup.

Refer to Chapter 3 for details on entering and navigating through the BIOS Setup

Due to chipset limitation, when SATA ports are set to RAID mode, all SATA ports run at RAID mode together.

5.1.4 Intel® Rapid Storage Technology Option ROM utility

To enter the Intel® Rapid Storage Technology Option ROM utility:

1. Turn on the system.
2. During POST, press <Ctrl> + <I> to display the utility main menu.

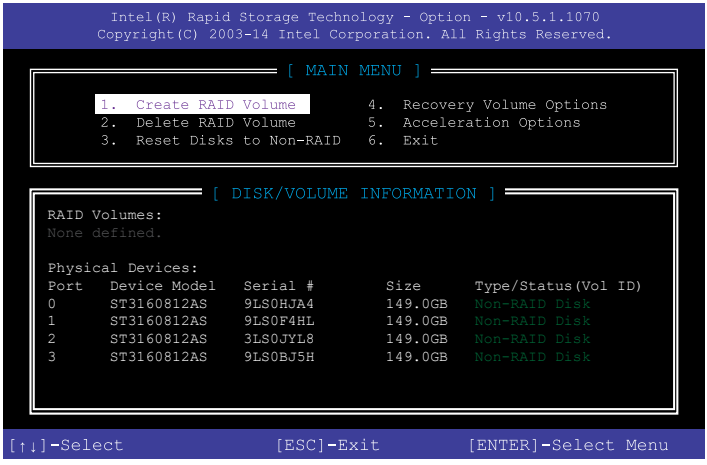

The navigation keys at the bottom of the screen allow you to move through the menus and select the menu options.

The RAID BIOS setup screens shown in this section are for reference only and may not exactly match the items on your screen.

The utility supports maximum four hard disk drives for RAID configuration.

Chapter 5

Creating a RAID set

To create a RAID set:

1. From the utility main menu, select **1. Create RAID Volume** and press <Enter>. The following screen appears:

2. Enter a name for the RAID set and press <Enter>.
3. When the RAID Level item is selected, press the up/down arrow key to select a RAID level to create, and then press <Enter>.
4. When the Disks item is selected, press <Enter> to select the hard disk drives you want to include in the RAID set. The SELECT DISKS screen appears:

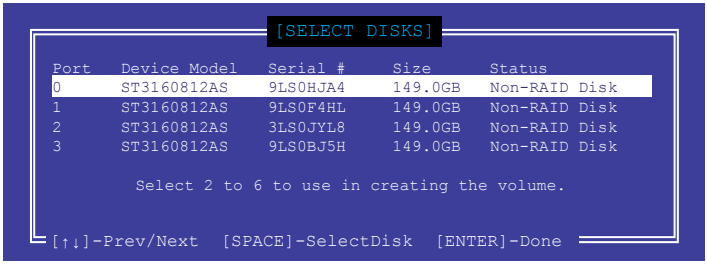

Chapter 5

5. Use the up/down arrow key to select a drive, and then press <Space> to select. A small triangle marks the selected drive. Press <Enter> after completing your selection.

6. Use the up/down arrow key to select the stripe size for the RAID array (for RAID 0, 10 and 5 only),then press <Enter>. The available stripe size values range from 4 KB to 128 KB. The following are typical values:

   - RAID 0: 128 KB
   - RAID 10: 64 KB
   - RAID 5: 64 KB

We recommend a lower stripe size for server systems, and a higher stripe size for multimedia computer systems used mainly for audio and video editing.

7. When the **Capacity** item is selected, enter the RAID volume capacity that you want and press <Enter>. The default value indicates the maximum allowed capacity.

8. When the **Create Volume** item is selected, press <Enter>. The following warning message appears:

```
WARNING:  ALL DATA ON SELECTED DISKS WILL BE LOST.
Are you sure you want to create this volume? (Y/N)
```

9. Press <Y> to create the RAID volume and return to the main menu, or <N> to go back to the **CREATE VOLUME** menu.

Deleting a RAID set

Be cautious when deleting a RAID set. You will lose all data on the hard disk drives when you delete a RAID set.

To delete a RAID set:

1. From the utility main menu, select **2. Delete RAID Volume** and press <Enter>. The following screen appears:

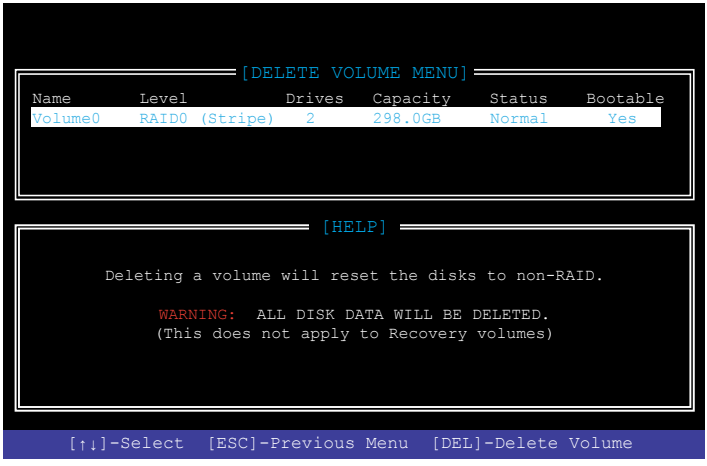

2. Use the up/down arrow key to select the RAID set you want to delete, and then press <Delete>. The following warning message appears:

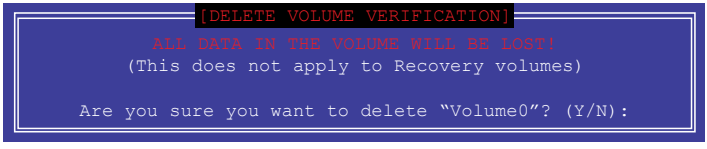

3. Press <Y> to delete the RAID set and return to the utility main menu, or press <N> to return to the DELETE VOLUME menu.

Exiting the Intel® Rapid Storage Technology Option ROM utility

To exit the utility:

1. From the utility main menu, select **5. Exit**, then press <Enter>. The following warning message appears:

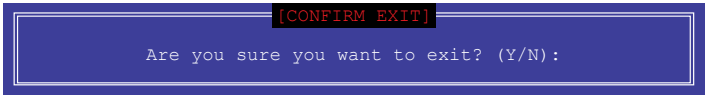

2. Press <Y> to exit or press <N> to return to the utility main menu.

5.2 Creating a RAID driver disk

A floppy disk with the RAID driver is required when installing a Windows® operating system on a hard disk drive that is included in a RAID set.

The motherboard does not provide a floppy drive connector. You have to use a USB floppy disk drive when creating a SATA RAID driver disk.

5.2.1 Creating a RAID driver disk without entering the OS

To create a RAID driver disk without entering the OS:

1. Boot your computer.
2. Press <Delete> during POST to enter the BIOS setup utility.
3. Set the optical drive as the primary boot device.
4. Insert the support DVD into the optical drive.
5. Save changes and exit BIOS.
6. When the Make Disk menu appears, press <1> to create a RAID driver disk.
7. Insert a formatted floppy disk into the USB floppy disk drive, then press <Enter>.
8. Follow the succeeding screen instructions to complete the process.

5.2.2 Creating a RAID driver disk in Windows®

To create a RAID driver disk in Windows®:

1. Start Windows®.
2. Plug the USB floppy disk drive and insert a floppy disk.
3. Place the motherboard support DVD into the optical drive.
4. Go to the **Intel AHCI/RAID Driver** menu then click **Intel AHCI/RAID Driver path** to open the RAID driver folder.
5. Select **32bit** or **64bit** folder depending on your operating system. Copy the files of the selected folder to the root path of your USB floppy disk drive.

Write-protect the floppy disk to avoid a computer virus infection.

5.2.3 Installing the RAID driver during Windows® OS installation

To install the RAID driver for Windows® 7:

1. During the OS installation, click **Load Driver** to allow you to select the installation media containing the RAID driver.
2. Insert the USB flash drive with RAID driver into the USB port or the support DVD into the optical drive, and then click **Browse**.
3. Click the name of the device you've inserted, go to **Drivers > RAID**, and then select the RAID driver for the corresponding OS version. Click **OK**.
4. Follow the succeeding screen instructions to complete the installation.

Before loading the RAID driver from a USB flash drive, you have to use another computer to copy the RAID driver from the support DVD to the USB flash drive.

To set up a Windows® UEFI operating system under RAID mode, ensure to load the UEFI driver for your optical drive.

Multiple GPU support

6

6.1 AMD® CrossFireX™ technology

The motherboard supports the AMD® CrossFireX™ technology that allows you to install multi-graphics processing units (GPU) graphics cards. Follow the installation procedures in this section.

6.1.1 Requirements

- In Dual CrossFireX mode, you should have two identical CrossFireX-ready graphics cards or one CrossFireX-ready dual-GPU graphics card that are AMD® certified.
- Ensure that your graphics card driver supports the AMD CrossFireX technology. Download the latest driver from the AMD website at www.amd.com.
- Ensure that your power supply unit (PSU) can provide at least the minimum power required by your system. See Chapter 1 for details.

- We recommend that you install additional chassis fans for better thermal environment.
- Visit the AMD Game website at http://game.amd.com for the latest certified graphics card and the supported 3D application list.

6.1.2 Before you begin

For AMD CrossFireX to work properly, you have to uninstall all existing graphics card drivers before installing AMD CrossFireX graphics cards to your system.

To uninstall existing graphics card drivers:

1. Close all current applications.
2. Go to **Control Panel > Programs and Features**.
3. Select your current graphics card driver/s.
4. Select **Uninstall**.
5. Turn off your computer.

6.1.3 Installing two CrossFireX™ graphics cards

The following pictures are for reference only. The graphics cards and the motherboard layout may vary with models, but the installation steps remain the same.

To install two CrossFire™ graphics cards:

1. Prepare two CrossFireX-ready graphics cards.
2. Insert the two graphics card into the PCIEX16 slots. If your motherboard has more than two PCIEX16 slots, refer to Chapter 1 in this user manual for the locations of the PCIEX16 slots recommended for multi-graphics card installation.
3. Ensure that the cards are properly seated on the slots.
4. Align and firmly insert the CrossFireX bridge connector to the goldfingers on each graphics card. Ensure that the connector is firmly in place.

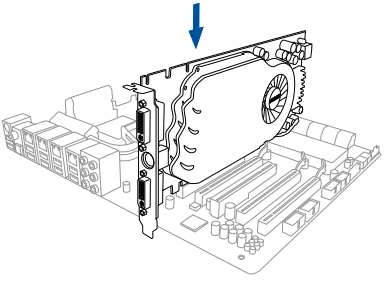

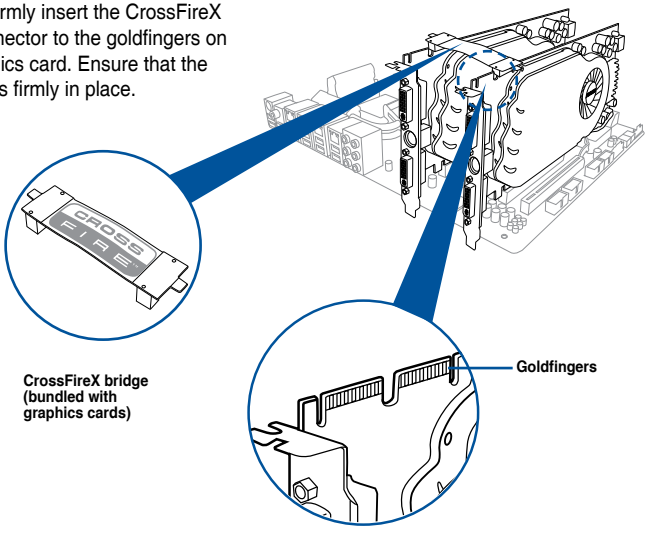

5. Connect two independent auxiliary power sources from the power supply to the two graphics cards separately.
6. Connect a VGA or a DVI cable to the graphics card.

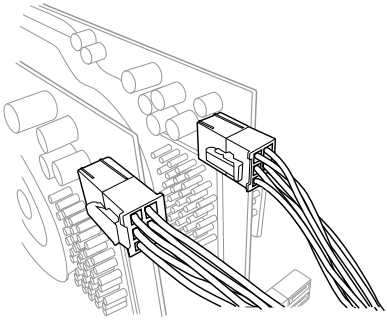

6.1.4 Installing three CrossFireX™ graphics cards

To install three CrossFire™ graphics cards:

1. Prepare three CrossFireX-ready graphics cards.
2. Insert the three graphics card into the PCIEX16 slots. If your motherboard has more than three PCIEX16 slots, refer to Chapter 1 in this user manual for the locations of the PCIEX16 slots recommended for multi-graphics card installation.
3. Ensure that the cards are properly seated on the slots.
4. Align and firmly insert the two CrossFireX™ bridge connectors to the goldfingers on each graphics card. Ensure that the connectors are firmly in place.

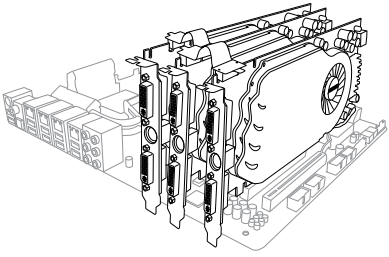

5. Connect three independent auxiliary power sources from the power supply to the three graphics cards separately.
6. Connect a VGA or a DVI cable to the graphics card.

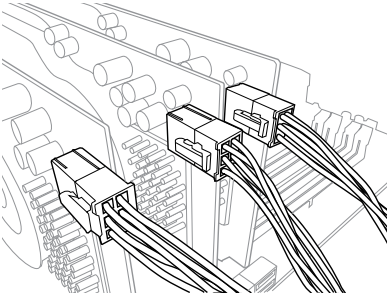

6.1.5 Installing the device drivers

Refer to the documentation that came with your graphics card package to install the device drivers.

Ensure that your PCI Express graphics card driver supports the AMD® CrossFireX™ technology. Download the latest driver from the AMD website at www.amd.com.

6.1.6 Enabling the AMD® CrossFireX™ technology

After installing your graphics cards and the device drivers, enable the CrossFireX™ feature through the AMD Vision Engine Control Center in Windows environment.

Launching the AMD VISION Engine Control Center

To launch the AMD VISION Engine Control Center:

1. Right-click on the Windows® desktop and select **AMD VISION Engine Control Center**.

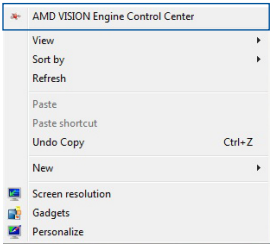

Chapter 6

Enabling Dual CrossFireX™ technology

To enable Dual CrossFire™ technology:

1. In the AMD Vision Engine Control Center window, click **Performance > AMD CrossFireX™**.
2. Select **Enable CrossFireX™**.
3. Select a GPU combination from the drop-down list.
4. Click **Apply** to save and activate the GPU settings made.

Chapter 6

6.2 NVIDIA® SLI™ technology

The motherboard supports the NVIDIA® SLI™ (Scalable Link Interface) technology that allows you to install multi-graphics processing units (GPU) graphics cards. Follow the installation procedures in this section.

6.2.1 Requirements

- In SLI mode, you should have two identical SLI-ready graphics cards that are NVIDIA® certified.
- Ensure that your graphics card driver supports the NVIDIA SLI technology. Download the latest driver from the NVIDIA website at www.nvidia.com.
- Ensure that your power supply unit (PSU) can provide at least the minimum power required by your system.

- We recommend that you install additional chassis fans for better thermal environment.
- Visit the NVIDIA zone website at http://www.nzone.com for the latest certified graphics card and supported 3D application list.

6.2.2 Installing two SLI-ready graphics cards

The following pictures are for reference only. The graphics cards and the motherboard layout may vary with models, but the installation steps remain the same.

To install two SLI-ready graphics cards:

1. Prepare two SLI-ready graphics cards.
2. Insert the two graphics card into the PCIEX16 slots. If your motherboard has more than two PCIEX16 slots, refer to Chapter 1 in this user manual for the locations of the PCIEX16 slots recommended for multi-graphics card installation.
3. Ensure that the cards are properly seated on the slots.

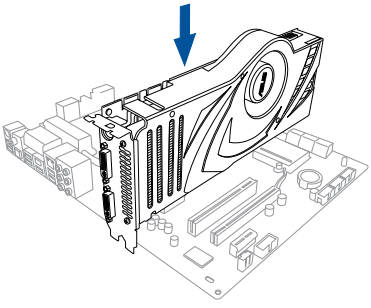

Chapter 6

4. Align and firmly insert the SLI bridge connector to the goldfingers on each graphics card. Ensure that the connector is firmly in place.

5. Connect two independent auxiliary power sources from the power supply to the two graphics cards separately.

6. Connect a VGA or a DVI cable to the graphics card.

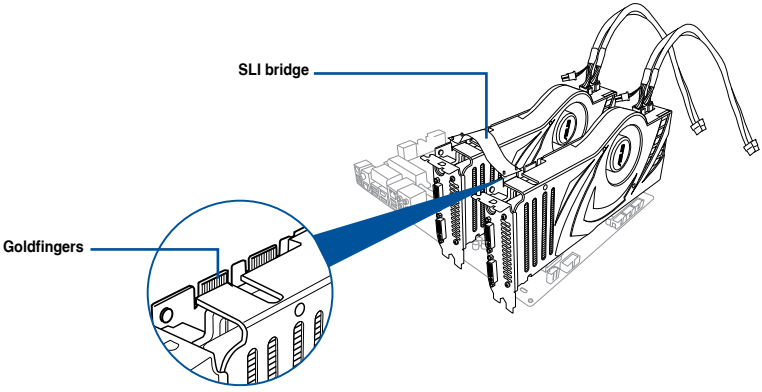

6.2.3 Installing three SLI-ready graphics cards

Refer to the documentation that came with your graphics card package to install the device drivers.

To install three SLI-ready graphics cards:

1. Prepare three SLI-ready graphics cards.

2. Insert the three graphics cards into the PCIEX16 slots. If your motherboard has more than two PCIEX16 slots, refer to Chapter 1 in this user manual for locations of the PCIEX16 slots recommended for multi-graphics card installation.

3. Ensure that the cards are properly seated on the slots.

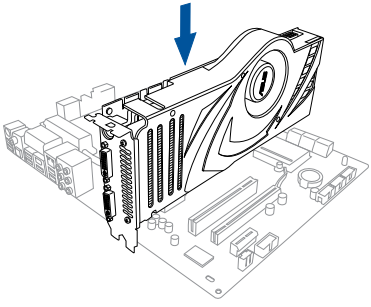

Chapter 6

4. Align and firmly insert the 3-way SLI bridge connector to the goldfingers on each graphics card. Ensure that the connector is firmly in place.

5. Connect three independent auxiliary power sources from the power supply to the three graphics cards separately.

6. Connect a VGA or a DVI cable to the graphics card.

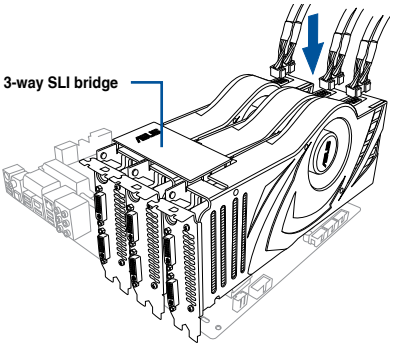

6.2.4 Installing the device drivers

Refer to the documentation that came with your graphics card package to install the device drivers.

Ensure that your PCI Express graphics card driver supports the NVIDIA® SLI™ technology. Download the latest driver from the NVIDIA website at www.nvidia.com.

6.2.5 Enabling the NVIDIA® SLI™ technology

After installing your graphics cards and the device drivers, enable the SLI feature in NVIDIA® Control Panel under the Windows® 7 operating system.

Launching the NVIDIA Control Panel

You can launch the NVIDIA Control Panel by the following two methods:

A. Right click on the empty space of the Windows® desktop and select **NVIDIA Control Panel**.

The NVIDIA Control Panel window appears (See Step B3).

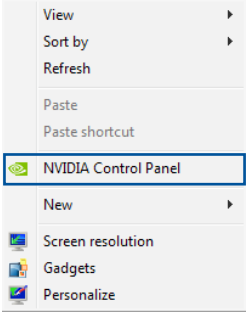

Chapter 6

B1. If you cannot see the NVIDIA Control Panel item in step (A), select **Screen Resolution**.

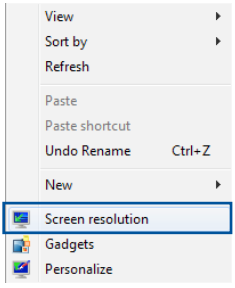

B2. From the Screen Resolution window, click **Advanced settings**.

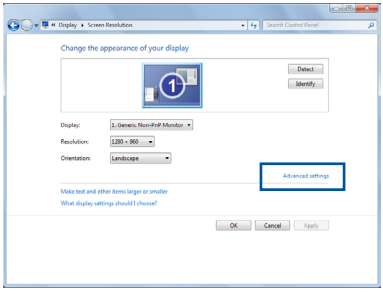

B3. The NVIDIA Control Panel window appears.

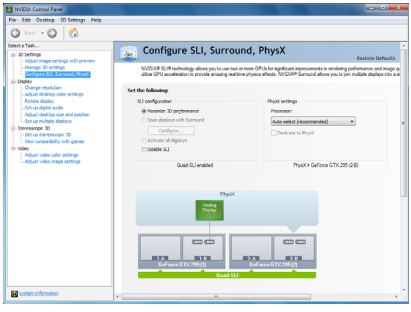

Chapter 6

Enabling SLI settings

From the NVIDIA Control Panel window, select **Configure SLI**, **Surround**, **PhysX**. In the **Quad-SLI enabled**, click **Maximize 3D Performance SLI** to set the display for viewing SLI rendered content. When done, click **Apply**.

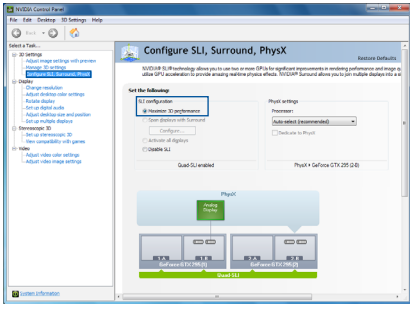

Appendices

Notices

Federal Communications Commission Statement

This device complies with Part 15 of the FCC Rules. Operation is subject to the following two conditions:

- This device may not cause harmful interference.
- This device must accept any interference received including interference that may cause undesired operation.

This equipment has been tested and found to comply with the limits for a Class B digital device, pursuant to Part 15 of the FCC Rules. These limits are designed to provide reasonable protection against harmful interference in a residential installation. This equipment generates, uses and can radiate radio frequency energy and, if not installed and used in accordance with manufacturer's instructions, may cause harmful interference to radio communications. However, there is no guarantee that interference will not occur in a particular installation. If this equipment does cause harmful interference to radio or television reception, which can be determined by turning the equipment off and on, the user is encouraged to try to correct the interference by one or more of the following measures:

- Reorient or relocate the receiving antenna.
- Increase the separation between the equipment and receiver.
- Connect the equipment to an outlet on a circuit different from that to which the receiver is connected.
- Consult the dealer or an experienced radio/TV technician for help.

The use of shielded cables for connection of the monitor to the graphics card is required to assure compliance with FCC regulations. Changes or modifications to this unit not expressly approved by the party responsible for compliance could void the user's authority to operate this equipment.

IC: Canadian Compliance Statement

Complies with the Canadian ICES-003 Class B specifications. This device complies with RSS 210 of Industry Canada. This Class B device meets all the requirements of the Canadian interference-causing equipment regulations.

This device complies with Industry Canada license exempt RSS standard(s). Operation is subject to the following two conditions: (1) this device may not cause interference, and (2) this device must accept any interference, including interference that may cause undesired operation of the device.

Cut appareil numérique de la Classe B est conforme à la norme NMB-003 du Canada.
Cet appareil numérique de la Classe B respecte toutes les exigences du Règlement sur le matériel brouilleur du Canada.

Cet appareil est conforme aux normes CNR exemptes de licence d'Industrie Canada. Le fonctionnement est soumis aux deux conditions suivantes :

(1) cet appareil ne doit pas provoquer d'interférences et

(2) cet appareil doit accepter toute interférence, y compris celles susceptibles de provoquer un fonctionnement non souhaité de l'appareil.

Canadian Department of Communications Statement

This digital apparatus does not exceed the Class B limits for radio noise emissions from digital apparatus set out in the Radio Interference Regulations of the Canadian Department of Communications.

This class B digital apparatus complies with Canadian ICES-003.

VCCI: Japan Compliance Statement

VCCI Class B Statement

情報処理装置等電波障害自主規制について
この装置は、情報処理装置等電波障害自主規制協議会（VCCI）の基準に基づくクラスB情報技術装置
です。この装置は家庭環境で使用されることを目的としていますが、この装置がラジオやテレビジ
ョン受信機に近接して使用されると、受信障害を引き起こすことがあります。

取扱説明書に従って正しい取り扱いをして下さい。

KC: Korea Warning Statement

B급 기기 (가정용 방송통신기자재)
이 기기는 가정용(B급) 전자파적합기기로서 주로 가정에서 사용하는 것을 목적으로 하며, 모든 지역에서 사용할 수 있습니다.

*당해 무선설비는 전파혼신 가능성이 있으므로 인명안전과 관련된 서비스는 할 수 없습니다.

Appendices

REACH

Complying with the REACH (Registration, Evaluation, Authorisation, and Restriction of Chemicals) regulatory framework, we published the chemical substances in our products at ASUS REACH website at http://csr.asus.com/english/REACH.htm.

DO NOT throw the motherboard in municipal waste. This product has been designed to enable proper reuse of parts and recycling. This symbol of the crossed out wheeled bin indicates that the product (electrical and electronic equipment) should not be placed in municipal waste. Check local regulations for disposal of electronic products.

DO NOT throw the mercury-containing button cell battery in municipal waste. This symbol of the crossed out wheeled bin indicates that the battery should not be placed in municipal waste.

ASUS Recycling/Takeback Services

ASUS recycling and takeback programs come from our commitment to the highest standards for protecting our environment. We believe in providing solutions for you to be able to responsibly recycle our products, batteries, other components as well as the packaging materials. Please go to http://csr.asus.com/english/Takeback.htm for detailed recycling information in different regions.

RF Equipment Notices

CE: European Community Compliance Statement

The equipment complies with the RF Exposure Requirement 1999/519/EC, Council Recommendation of 12 July 1999 on the limitation of exposure of the general public to electromagnetic fields (0–300 GHz). This wireless device complies with the R&TTE Directive.

Wireless Radio Use

This device is restricted to indoor use when operating in the 5.15 to 5.25 GHz frequency band.

Exposure to Radio Frequency Energy

The radiated output power of the Wi-Fi technology is below the FCC radio frequency exposure limits. Nevertheless, it is advised to use the wireless equipment in such a manner that the potential for human contact during normal operation is minimized.

FCC Bluetooth Wireless Compliance

The antenna used with this transmitter must not be colocated or operated in conjunction with any other antenna or transmitter subject to the conditions of the FCC Grant.

Bluetooth Industry Canada Statement

This Class B device meets all requirements of the Canadian interference-causing equipment regulations.

Cet appareil numérique de la Class B respecte toutes les exigences du Règlement sur le matériel brouilleur du Canada.

NCC: Taiwan Wireless Statement

無線設備的警告聲明
經型式認證合格之低功率射頻電機，非經許可，公司、商號或使用者均不得擅自變更射頻、加大功率或變更原設計之特性及功能。低功率射頻電機之使用不得影響飛航安全及干擾合法通信；經發現有干擾現象時，應立即停用，並改善至無干擾時方得繼續使用。前項合法通信指依電信法規定作業之無線通信。低功率射頻電機須忍受合法通信或工業、科學及醫療用電波輻射性電機設備之干擾。

於 5.25GHz 至 5.35GHz 區域內操作之
無線設備的警告聲明
工作頻率 5.250 ～ 5.350GHz 該頻段限於室內使用。

Japan RF Equipment Statement

この製品は、周波数帯域5.15～5.35G Hzで動作しているときは、屋内においてのみ使用可能です。

KC (RF Equipment)

대한민국 규정 및 준수
방통위고시에 따른 고지사항
해당 무선설비는 운용 중 전파혼신 가능성이 있음,
이 기기는 인명안전과 관련된 서비스에 사용할 수 없습니다.

Google™ License Terms

Copyright© 2014 Google Inc. All Rights Reserved.

Licensed under the Apache License, Version 2.0 (the “License”); you may not use this file except in compliance with the License. You may obtain a copy of the License at:

http://www.apache.org/licenses/LICENSE-2.0

Unless required by applicable law or agreed to in writing, software distributed under the License is distributed on an “AS IS” BASIS, WITHOUT WARRANTIES OR CONDITIONS OF ANY KIND, either express or implied.

See the License for the specific language governing permissions and limitations under the License.

ASUS contact information

ASUSTeK COMPUTER INC.

Address	15 Li-Te Road, Peitou, Taipei, Taiwan 11259
Telephone	+886-2-2894-3447
Fax	+886-2-2890-7798
E-mail	info@asus.com.tw
Web site	www.asus.com.com/

Technical Support

Telephone	+86-21-38429911
Fax	+86-21-5866-8722, ext. 9101#
Online support	http://www.asus.com/tw/support/

ASUS COMPUTER INTERNATIONAL (America)

Address	800 Corporate Way, Fremont, CA 94539, USA
Telephone	+1-510-739-3777
Fax	+1-510-608-4555
Web site	http://www.asus.com/us/

Technical Support

Support fax	+1-812-284-0883
Telephone	+1-812-282-2787
Online support	http://www.service.asus.com/

ASUS COMPUTER GmbH (Germany and Austria)

Address	Harkort Str. 21-23, D-40880 Ratingen, Germany
Fax	+49-2102-959911
Web site	http://www.asus.com/de
Online contact	http://eu-rma.asus.com/sales

Technical Support

Telephone	+49-1805-010923*
Support Fax	+49-2102-9599-11
Online support	http://www.asus.com/de/support/

DECLARATION OF CONFORMITY

Per FCC Part 2 Section 2. 1077(a)

Responsible Party Name: **Asus Computer International**

Address: **800 Corporate Way, Fremont, CA 94539.**

Phone/Fax No: **(510)739-3777/(510)608-4555**

hereby declares that the product

Product Name : Motherboard

Model Number : X99-WS/IPMI

Conforms to the following specifications:

☒ FCC Part 15, Subpart B, Unintentional Radiators

Supplementary Information:

This device complies with part 15 of the FCC Rules. Operation is subject to the following two conditions: (1) This device may not cause harmful interference, and (2) this device must accept any interference received, including interference that may cause undesired operation.

Representative Person's Name : **Steve Chang / President**

Signature :

Date : **Nov. 07, 2014**

Ver. 140331

EC Declaration of Conformity

ASUS IN SEARCH OF INCREDIBLE

We, the undersigned,

Manufacturer:	ASUSTeK COMPUTER INC.
Address:	4F, No. 150, LI-TE Rd., PEITOU, TAIPEI 112, TAIWAN
Authorized representative in Europe:	ASUS COMPUTER GmbH
Address, City:	HARKORT STR. 21-23, 40880 RATINGEN
Country:	GERMANY

declare the following apparatus:

Product name :	**Motherboard**
Model name :	**X99-WS/IPMI**

conform with the essential requirements of the following directives:

☒2004/108/EC-EMC Directive

☒ EN 55022:2010+AC:2011	☒ EN 55024:2010
☒ EN 61000-3-2:2006+A2:2009	☒ EN 61000-3-3:2008
☐ EN 55013:2001+A1:2003+A2:2006	☐ EN 55020:2007+A11:2011

☐1999/5/EC-R&TTE Directive

☐ EN 300 328 V1.7.1(2006-10)	☐ EN 301 489-1 V1.9.2(2011-09)
☐ EN 300 440-1 V1.6.1(2010-08)	☐ EN 301 489-3 V1.4.1(2002-08)
☐ EN 300 440-2 V1.4.1(2010-08)	☐ EN 301 489-4 V1.4.1(2009-05)
☐ EN 301 511 V9.0.2(2003-03)	☐ EN 301 489-7 V1.3.1(2005-11)
☐ EN 301 908-1 V5.2.1(2011-05)	☐ EN 301 489-9 V1.4.1(2007-11)
☐ EN 301 908-2 V5.2.1(2011-07)	☐ EN 301 489-17 V2.2.1(2012-09)
☐ EN 301 893 V1.6.1(2011-11)	☐ EN 301 489-24 V1.5.1(2010-09)
☐ EN 302 544-2 V1.1.1(2009-01)	☐ EN 302 326-2 V1.2.2(2007-06)
☐ EN 302 623 V1.1.1(2009-01)	☐ EN 302 326-3 V1.3.1(2007-09)
☐ EN 50360:2001	☐ EN 301 357-2 V1.4.1(2008-11)
☐ EN 62479:2010	☐ EN 302 291-1 V1.1.1(2005-07)
☐ EN 50385:2002	☐ EN 302 291-2 V1.1.1(2005-07)
☐ EN 62311:2008	

☒2006/95/EC-LVD Directive

☒ EN 60950-1 / A12:2011	☐ EN 60065:2002 / A12:2011

☐2009/125/EC-ErP Directive

☐ Regulation (EC) No. 1275/2008	☐ Regulation (EC) No. 278/2009
☐ Regulation (EC) No. 642/2009	☐ Regulation (EC) No. 617/2013

☒2011/65/EU-RoHS Directive

Ver. 140331

☒CE marking

(EC conformity marking)

Position : **CEO**

Name : **Jerry Shen**

Signature : _____

Declaration Date: 07/11/2014

Year to begin affixing CE marking: 2014