X10DRFR
X10DRFR-N
X10DRFR-NT

USER'S MANUAL

Revision 1.1

The information in this user's manual has been carefully reviewed and is believed to be accurate. The vendor assumes no responsibility for any inaccuracies that may be contained in this document, and makes no commitment to update or to keep current the information in this manual, or to notify any person or organization of the updates. **Please Note: For the most up-to-date version of this manual, please see our website at www.supermicro.com.**

Super Micro Computer, Inc. ("Supermicro") reserves the right to make changes to the product described in this manual at any time and without notice. This product, including software and documentation, is the property of Supermicro and/or its licensors, and is supplied only under a license. Any use or reproduction of this product is not allowed, except as expressly permitted by the terms of said license.

IN NO EVENT WILL SUPER MICRO COMPUTER, INC. BE LIABLE FOR DIRECT, INDIRECT, SPECIAL, INCIDENTAL, SPECULATIVE OR CONSEQUENTIAL DAMAGES ARISING FROM THE USE OR INABILITY TO USE THIS PRODUCT OR DOCUMENTATION, EVEN IF ADVISED OF THE POSSIBILITY OF SUCH DAMAGES. IN PARTICULAR, SUPER MICRO COMPUTER, INC. SHALL NOT HAVE LIABILITY FOR ANY HARDWARE, SOFTWARE, OR DATA STORED OR USED WITH THE PRODUCT, INCLUDING THE COSTS OF REPAIRING, REPLACING, INTEGRATING, INSTALLING OR RECOVERING SUCH HARDWARE, SOFTWARE, OR DATA.

Any disputes arising between the manufacturer and the customer shall be governed by the laws of Santa Clara County in the State of California, USA. The State of California, County of Santa Clara shall be the exclusive venue for the resolution of any such disputes. Supermicro's total liability for all claims will not exceed the price paid for the hardware product.

FCC Statement: This equipment has been tested and found to comply with the limits for a Class A digital device pursuant to Part 15 of the FCC Rules. These limits are designed to provide reasonable protection against harmful interference when the equipment is operated in a commercial environment. This equipment generates, uses, and can radiate radio frequency energy and, if not installed and used in accordance with the manufacturer's instruction manual, may cause harmful interference with radio communications. Operation of this equipment in a residential area is likely to cause harmful interference, in which case you will be required to correct the interference at your own expense.

California Best Management Practices Regulations for Perchlorate Materials: This Perchlorate warning applies only to products containing CR (Manganese Dioxide) Lithium coin cells. "Perchlorate Material-special handling may apply. See www.dtsc.ca.gov/hazardouswaste/perchlorate".

WARNING: Handling of lead solder materials used in this product may expose you to lead, a chemical known to the State of California to cause birth defects and other reproductive harm.

Manual Revision 1.1

Release Date: April 5, 2016

Unless you request and receive written permission from Super Micro Computer, Inc., you may not copy any part of this document.

Information in this document is subject to change without notice. Other products and companies referred to herein are trademarks or registered trademarks of their respective companies or mark holders.

Copyright © 2016 by Super Micro Computer, Inc.
All rights reserved.

Printed in the United States of America

Preface

This manual is written for system integrators, IT professionals, and knowledgeable end-users. It provides information for the installation and use of the X10DRFR/X10DRFR-N//X10DRFR-NT motherboard.

About This Motherboard

The Super X10DRFR/X10DRFR-N/X10DRFR-NT motherboard supports dual Intel® E5-2600 (v3/v4) processors (Socket R3) that offer new Intel Microarchitecture 22nm (E5-2600v3)/14nm (E5-2600v4) Process Technology, delivering the best balanced solution of performance, power efficiency, and features to meet demands of high-end server platforms. With the PCH C612 built in, the X10DRFR(-N/-NT) motherboard supports Intel® Manageability Engine, Intel Rapid Storage Technology enterprise, Digital Media Interface, PCI-E Gen. 3.0, and 2400 MHz (max) DDR4 memory. This motherboard is ideal for 4U FatTwin server platforms. Please refer to our website (http://www.supermicro.com) for processor and memory support updates.

Manual Organization

Chapter 1 describes the features, specifications and performance of the motherboard. It also provides detailed information about the Intel PCH C612 chipset.

Chapter 2 provides hardware installation instructions. Read this chapter when installing the processor, memory modules, and other hardware components into the system. If you encounter any problems, see **Chapter 3**, which describes troubleshooting procedures for video, memory, and system setup stored in the CMOS.

Chapter 4 includes an introduction to BIOS, and provides detailed information on running the BIOS Setup utility.

Appendix A provides BIOS Error Beep Codes.

Appendix B lists software installation instructions**.**

Appendix C contains UEFI BIOS Recovery instructions.

Conventions Used in the Manual

Pay special attention to the following symbols for proper system installation and to prevent damage to the system or injury to yourself:

Warning: Important information given to ensure proper system installation or to prevent damage to the components

Note: Additional information given to differentiate between various models or provides information for proper system setup.

Contacting Supermicro

Headquarters

Address:	Super Micro Computer, Inc.
	980 Rock Ave.
	San Jose, CA 95131 U.S.A.
Tel:	+1 (408) 503-8000
Fax:	+1 (408) 503-8008
Email:	marketing@supermicro.com (General Information)
	support@supermicro.com (Technical Support)
Website:	www.supermicro.com

Europe

Address:	Super Micro Computer B.V.
	Het Sterrenbeeld 28, 5215 ML
	's-Hertogenbosch, The Netherlands
Tel:	+31 (0) 73-6400390
Fax:	+31 (0) 73-6416525
Email:	sales@supermicro.nl (General Information)
	support@supermicro.nl (Technical Support)
	rma@supermicro.nl (Customer Support)
Website:	www.supermicro.nl

Asia-Pacific

Address:	Super Micro Computer, Inc.
	3F, No. 150, Jian 1st Rd.
	Zhonghe Dist., New Taipei City 235
	Taiwan (R.O.C)
Tel:	+886-(2) 8226-3990
Fax:	+886-(2) 8226-3992
Email:	support@supermicro.com.tw
Website:	www.supermicro.com.tw

Table of Contents

Preface

Chapter 1 Overview

1-1 Overview 1-1

1-2 Processor and Chipset Overview 1-11

1-3 Special Features 1-12

1-4 System Health Monitoring 1-12

1-5 ACPI Features 1-13

1-6 Power Supply 1-13

1-7 Advanced Power Management 1-14

Intel® Intelligent Power Node Manager (NM) (Available when the Supermicro Power Manager [SPM] is installed) 1-14

Management Engine (ME) 1-14

Chapter 2 Installation

2-1 Standardized Warning Statements 2-1

2-2 Static-Sensitive Devices 2-4

2-3 Motherboard Installation 2-5

2-4 Processor and Heatsink Installation 2-7

Installing the LGA2011 Processor 2-7

Installing a Passive Heatsink 2-11

Removing the Passive Heatsink 2-12

2-5 Installing and Removing the Memory Modules 2-13

Installing & Removing DIMMs 2-13

Removing Memory Modules 2-13

2-6 Control Panel Connectors and I/O Ports 2-16

Back Panel Connectors and I/O Ports 2-16

Back Panel I/O Port Locations and Definitions 2-16

Universal Serial Bus (USB) 2-17

Video Connector 2-17

Ethernet Ports 2-18

2-7 Connecting Cables 2-19

Power Connectors 2-19

COM Port Header 2-20

IPMB I²C SMB 2-20

Fan Headers 2-21

TPM Header/Port 80 2-22

Non-Mask Interrupt Header 2-22

T-SGPIO 1/2 Headers 2-23
NVM Express Connections (For X10DRFR-N/NT Only) 2-23
2-8 Jumper Settings 2-24
Explanation of Jumpers 2-24
LAN Ports 1/2 Enable 2-24
CMOS Clear 2-25
Watch Dog Enable/Disable 2-25
VGA Enable 2-26
BMC Enable 2-26
I^2C Bus to PCI-Exp. Slots 2-27
Manufacturer Mode Select 2-27
2-9 Onboard LED Indicators 2-28
LAN LEDs 2-28
IPMI_LAN LEDs 2-28
Standby_Power Good LED 2-29
BMC Heartbeat LED 2-29
System_Power Good LED 2-30
SATA Activity LED 2-30
2-10 PCI-Express and Serial ATA Connections 2-31
PCI-Express 3.0 x16 Slot 2-31
PCI-Express 3.0 x8 Slots 2-31
Serial ATA Ports 2-32

Chapter 3 Troubleshooting

3-1 Troubleshooting Procedures 3-1
3-2 Technical Support Procedures 3-5
3-3 Battery Removal and Installation 3-6
Battery Removal 3-6
3-4 Frequently Asked Questions 3-7
3-5 Returning Merchandise for Service 3-8

Chapter 4 BIOS

4-1 Introduction 4-1
4-2 Main Setup 4-2
4-3 Advanced Setup Configurations 4-4
4-4 Event Logs 4-32
4-5 IPMI 4-34
4-6 Security Settings 4-36
4-7 Boot Settings 4-37
4-8 Save & Exit 4-39

Appendix A BIOS Error Beep Codes

A-1 BIOS Error Beep Codes A-1

Appendix B Software Installation Instructions

B-1 Installing Software Programs B-1
B-2 Configuring SuperDoctor 5 .....B-2

Appendix C UEFI BIOS Recovery Instructions

C-1 An Overview to the UEFI BIOS C-1
C-2 How to Recover the UEFI BIOS Image (-the Main BIOS Block).....C-1
C-3 To Recover the Main BIOS Block Using a USB-Attached Device.....C-1

Chapter 1

Overview

1-1 Overview

Checklist

Congratulations on purchasing your computer motherboard from an acknowledged leader in the industry. Supermicro boards are designed with the utmost attention to detail to provide you with the highest standards in quality and performance.

The X10DRFR(-N/-NT) motherboard was designed to be used with a Supermicro-proprietary chassis as an integrated server platform. It is not to be used as a stand-alone product and will not be shipped independently in a retail box. No motherboard shipping package will be provided in your shipment.

Note 1: For your system to work properly, please follow the links below to download all necessary drivers/utilities and the user's manual for your motherboard.

- Supermicro product manuals: http://www.supermicro.com/support/manuals/
- Product Drivers and utilities: ftp://ftp.supermicro.com/

Note 2: For safety considerations, please refer to the complete list of safety warnings posted on the Supermicro website at http://www.supermicro.com/about/policies/safety_information.cfm.

If you have any questions, please contact our support team at support@supermicro.com.

Motherboard Image

Note: All graphics shown in this manual were based upon the latest PCB Revision available at the time of publishing of the manual. The motherboard you've received may or may not look exactly the same as the graphics shown in this manual.

Motherboard Layout

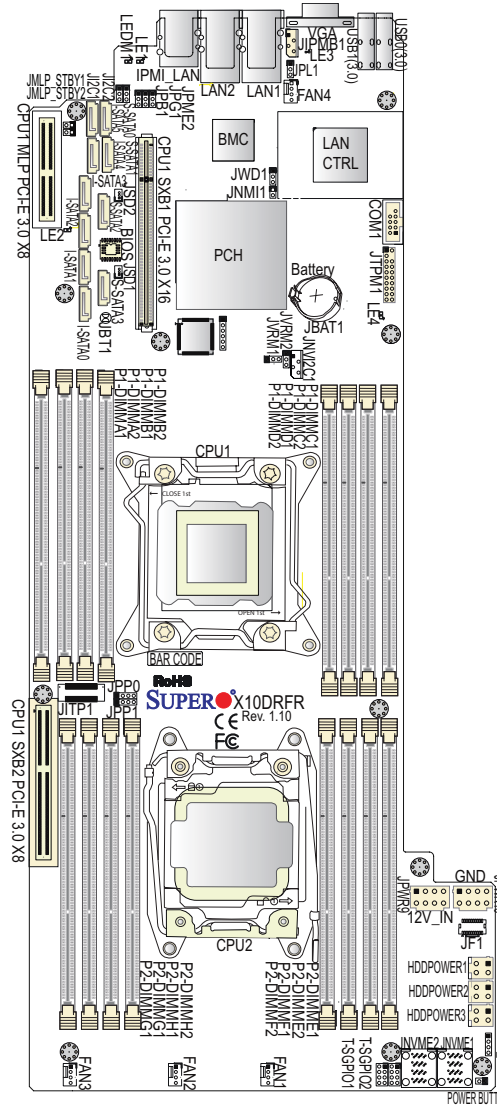

Notes:

1. For the latest CPU/Memory updates, please refer to our website at http://www.supermicro.com/products/motherboard/ for details.

2. Use only the correct type of onboard CMOS battery as specified by the manufacturer. Do not install the onboard battery upside down to avoid possible explosion.

Motherboard Quick Reference

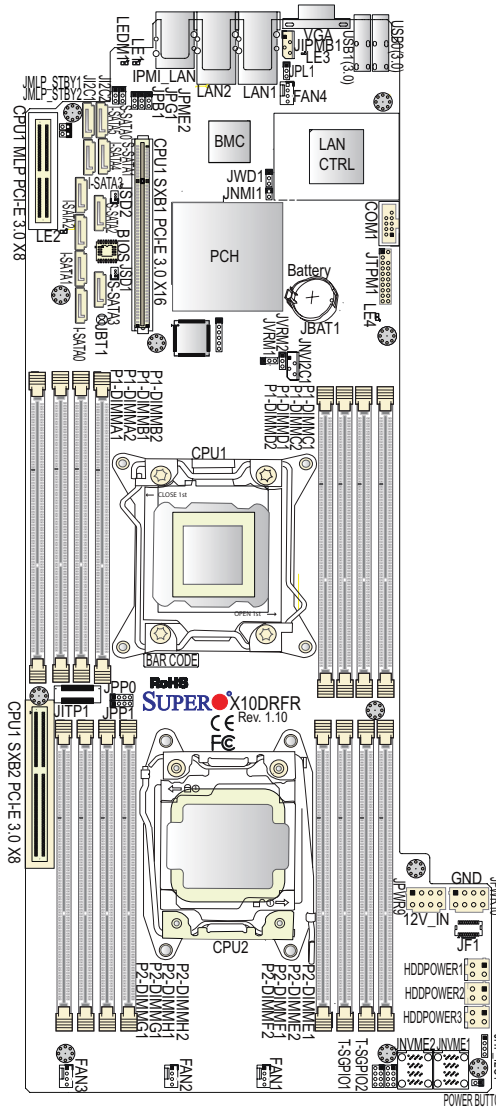

Notes:

- See Chapter 2 for detailed information jumpers, I/O ports, connectors and expansion slots. "■" indicates the location of "Pin 1".
- Components/Jumpers/LED Indicators that are not documented in this manual are reserved for internal testing only.

X10DRFR/X10DRFR-N/X10DRFR-NT Motherboard Jumpers

Jumper	Description	Default Setting
JBT1	Clear CMOS/Reset BIOS Configuration	See Chapter 2
JI^{2}C1/JI^{2}C2	SMB to PCI-E Slots	Pins 2-3 (Normal)
JPB1	BMC Enable	Pins 1-2 (Enabled)
JPG1	VGA Enable	Pins 1-2 (Enabled)
JPL1 (For X10DRFR(-N)	GLAN1/GLAN2 Enable	Pins 1-2 (Enabled)
JPL1 (For X10DRFR-NT)	10G-LAN1/10G-LAN2 Enable	Pins 1-2 (Enabled)
JPME2	Manufacture Mode (ME) Select	Pins 1-2 (Normal)
JWD1	Watch Dog	Pins 1-2 (Reset)

X10DRFR/X10DRFR-N/X10DRFR-NT Motherboard Connectors

Connectors	Description
Battery	Onboard CMOS battery (JBAT1) (See the Note on P. 1-3.)
COM1	Serial Port/COM Port 1
CPU1 MLP_PCI-E 3.0x8	Micro Low_Profile (MLP) PCI-E 3.0 x8 slot supported by CPU1
CPU1_SXB_PCI-E 3.0x16	SXB1_PCI-E 3.0 x16 slot supported by CPU1
FAN1-FAN4	CPU/System Cooling Fan headers 1-4
HDDPOWER 1/2/3	HDD Power headers 1/2/3 (JPWR_HDD1/2/3)
JF1	SMCI-Proprietary multiple connections head w/PMBus, Hotswap I^{2}C, LED signals, button signals, 5V standby power supported
JIPMB1	4-pin External BMC I^{2}C header (for an IPMI card)
JNMI1	Non-Mask Interrupt header
JPTM1	TPM (Trusted Platform Module)/Port 80
JPWR9/JPWR10	8-pin Power Connector 9 (12V_in)/Power Connector 10 (Ground)
JNVME1/2	NVM Express PCI-E 3.0 x4 ports 1/2 (for X10DRFR-N/NT only)
JNVI^{2}C1	System Management Bus (SMB) for NVM Express port (for X10DRFR-N/NT only)
LAN1/2	Gigabit (GLAN) Ethernet ports 1/2 (for X10DRFR(-N), 10G-LAN (TLAN) Ethernet ports 1/2 (for X10DRFR-NT)
(IPMI) LAN	IPMI_dedicated LAN port
Power-Button	Onboard power button

I-SATA0-5	I-SATA connectors 0-5 (supported by Intel PCH)
S-SATA0-3	S-SATA connectors 0-3, supported by Intel SCU (S-SATA2/3: used for Supermicro SuperDOMs (Devices-on-Module with built-in power pins)
T-SGPIO 1/2	Serial_link General Purpose I/O headers 1/2 (T-SGPIO1: for I-SATA0-5, T-SGPIO2: for S-SATA0-3)
USB0/USB1 (3.0)	Back panel USB 3.0 ports (USB0/USB1)
VGA	Back panel VGA port (JVGA1)

X10DRFR/X10DRFR-N/X10DRFR-NT Motherboard LED Indicators

LED	Description	State
LE1	UID (Unit_Identifier) LED)	Blue: (On/Blinking) Unit identified
LE2	System Power Good LED	On: System power on
LE3	SATA Activity LED	Green (Blinking): SATA active
LE4	Standby Power Good LED	On: Standby power on
LEDM1	BMC Heartbeat LED	Green (Blinking): BMC Normal

Warning: Do not install the onboard battery upside down to avoid damaging the components or the motherboard. Also, be sure to follow the instructions given by your local hazardous materials management agency to properly dispose of the used battery for your safety.

Motherboard Features

CPU	• Dual Intel® E5-2600 (v3/v4) processors (Socket R3 LGA 2011); each processor supports two full-width Intel QuickPath Interconnect (QPI) links (with Data Transfer Rate of up to 9.6 GT/s per QPI) **Notes**: 1. E5-2600v4 requires Revision 2.0 BIOS (or higher). 2. E5-2600v3 is fully back-compatible with all BIOS revisions.
Memory	• Integrated memory controller supports up to 1024 GB of Load Reduced (LRDIMM), and up to 512 GB of Registered (RDIMM) DDR4 (288-pin) ECC 2400/2133/1866/1600 MHz memory in 16 slots **Note**: Memory speed support is pending on the processors installed in the system. For the latest CPU/memory updates, please refer to our website at http://www.supermicro.com/products/motherboard.
	DIMM Sizes
	64GB @ 1.20V
Chipset	• Intel® PCH C612
Expansion Slots	• One (1) Micro Low-Profile (MLP) PCI-Exp 3.0 x8 slot supported CPU1 • One (1) SXB1 PCI-Exp 3.0 x16 slot supported CPU1 • Two (2) NVMe Ports 1/2 (dual PCI-E 3.0 x 4 mini-SAS HD connectors) (X10DRFR-N/-NT)
Graphics	• ASpeed AST2400 BMC Controller
Network	• One Intel i350 Gigabit (10/100/1000 Mb/s) Ethernet Dual-Channel Controller for GLAN 1/GLAN 2 ports (for X10DRFR/X10DRFR-N) • One Intel X540 10-Gigabit Ethernet Dual-Channel Controller for 10G-LAN (TLAN) 1/10G-LAN (TLAN) 2 ports (X10DRFR-NT) • One IPMI-dedicated LAN supported by the AST2400 BMC

I/O Devices	**SATA Connections**	
	• SATA 3.0	Six (6) SATA 3.0 Connections supported by Intel PCH (I-SATA0-5), Four (4) SATA 3.0 Connections supported by Intel SCU (S-SATA0-3), (S-SATA2/3: used with Supermicro's SuperDOMs (Device-on-Module) with power supply supported
	• RAID	RAID 0, 1, 5, 10 (from Intel PCH)
	IPMI 2.0	
	• IPMI 2.0 supported by the ASpeed 2400 BMC	
	Serial (COM) Port	
	• One (1) Fast UART 16550 Connection: 9-pin RS-232 port	
	VGA	
	• Rear VGA Port	
Peripheral Devices	**USB Devices**	
	• Two (2) USB 3.0 ports on the rear I/O panel (USB0/USB1)	
BIOS	• 16 MB AMI SPI BIOS Flash ROM	
	• DMI/DMI2 2.3, PCI 2.3, ACPI 2.0/3.0/4.0, USB Keyboard, Plug & Play (PnP), UEFI 2.3.1, and SMBIOS 2.7 or later	
Power Config.	• ACPI Power Management	
	• Main switch override mechanism	
	• Power-on mode for AC power recovery	
	• Intel® Intelligent Power Node Manager (available when the Supermicro Power Manager [SPM] is installed)	
	• Management Engine	
	• Riser Card auto-detection	
System Health Monitoring	**System Health Monitoring**	
	• Onboard system health monitors for 1.2V, +3.3V, 3.3V Standby, +5V, +5V Standby, +12, chipset (PCH) voltage, memory voltage, BMC voltage, and battery voltage.	

	• CPU 6-Phase switching voltage regulator
	• CPU/System overheat LED and control
	• CPU Thermal Trip support
	• Thermal Monitor 2 (TM2) support
	Fan Control
	• Fan status monitoring with firmware 4-pin fan speed control
	• Low noise fan speed control
	LED Indicators
	• System/CPU Overheat LED
	• Suspend-state LED
System Management	• PECI (Platform Environment Configuration Interface) 2.0 support
	• System resource alert via SuperDoctor® 5
	• Thermal Monitor 2 (TM2) support
	• SuperDoctor® 5, Watch Dog, NMI
	• Chassis Intrusion Header and Detection
Dimensions	• 19.63" (L) x 8.53" (W) x (498.60 mm x 216.67 mm)

Note: For IPMI Configuration Instructions, please refer to the Embedded IPMI Configuration User's Guide available @ http://www.supermicro.com/support/manuals/.

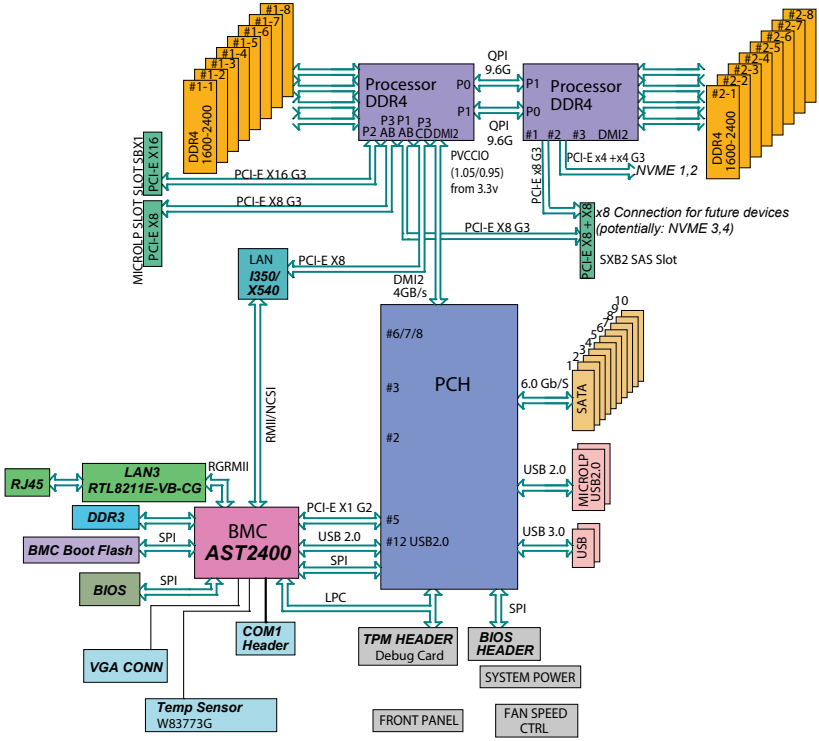

System Block Diagram

Notes: 1. This is a general block diagram and may not exactly represent the features on your motherboard. See the Motherboard Features pages for the actual specifications of each motherboard. 2. This block diagram is provided for your reference only.

1-2 Processor and Chipset Overview

Built upon the functionality and capability of the Intel E5-2600 (v3/v4) processors (Socket R3) and the Intel C612 PCH, the X10DRFR(-N/-NT) motherboard provides the best-balanced solution for performance, power efficiency, and features to address the diverse needs of next-generation Enterprise (4U) FatTwin server platforms.

With support of new Intel Microarchitecture 22nm (E5-2600v3)/14nm (E5-2600v4) Process Technology, the X10DRFR(-N/-NT) motherboard dramatically increases system performance.

The PCH C612 chip provides Enterprise SMbus and MCTP support, including the following features:

- DDR4 288-pin memory support on Socket R3
- Support for MCTP Protocol and ME
- Support of SMBus speeds of up to 1 MHz for BMC connectivity
- Improved I/O capabilities to high-storage-capacity configurations
- Embedded Platform
- SPI Enhancements with address space large enough for 2x BIOS
- BMC supports remote management, virtualization, and the security package for enterprise platforms

Notes:

1. E5-2600v4 requires Revision 2.0 BIOS (or higher).
2. E5-2600v3 is fully backward-compatible with all BIOS revisions.

1-3 Special Features

Recovery from AC Power Loss

The Basic I/O System (BIOS) provides a setting that determines how the system will respond when AC power is lost and then restored to the system. You can choose for the system to remain powered off (in which case you must press the power switch to turn it back on), or for it to automatically return to the power-on state. See the Advanced BIOS Setup section for this setting. The default setting is **Last State**.

1-4 System Health Monitoring

This section describes the features of system health monitoring of the motherboard. This motherboard has an onboard BaseBoard Management Controller (BMC) chip that supports system health monitoring. An onboard voltage monitor will scan the following onboard voltages continuously: +1.2V, +3.3V, 3.3V Standby, +5V, +5V Standby, +12V, CPU core, memory, chipset, BMC, and battery voltages. Once a voltage becomes unstable, a warning is given, or an error message is sent to the screen. The user can adjust the voltage thresholds to define the sensitivity of the voltage monitor.

Fan Status Monitor with Firmware Control

The system health monitoring support provided by the BMC controller can check the RPM status of a cooling fan. The onboard CPU and chassis fans are controlled by the thermal management via the onboard BMC.

Environmental Temperature Control

System-Health sensors monitor temperatures and voltage settings of onboard processors and the system in real time via the IPMI interface. Whenever the temperature of the CPU or the system exceeds a user-defined threshold, system/CPU cooling fans will be turned on to prevent the CPU or the system from overheating.

Note: To avoid possible system overheating, please be sure to provide adequate airflow to your system.

System Resource Alert

This feature is available when used with SuperDoctor 5. SuperDoctor 5 is used to notify the user of certain system events. For example, you can configure SuperDoctor 5 to provide you with warnings when the system temperature, CPU temperatures, voltages and fan speeds go beyond a predefined range.

1-5 ACPI Features

ACPI stands for Advanced Configuration and Power Interface. The ACPI specification defines a flexible and abstract hardware interface that provides a standard way to integrate power management features throughout a computer system, including its hardware, operating system and application software. This enables the system to automatically turn on and off peripherals such as network cards, hard disk drives and printers.

In addition to enabling operating_system-directed power management, ACPI also provides a generic system event mechanism for Plug and Play, and an operating system-independent interface for configuration control. ACPI leverages the Plug and Play BIOS data structures, while providing a processor architecture-independent implementation that is compatible with Windows 7, Windows 8/R2, and Windows 2012/R2 operating systems.

1-6 Power Supply

As with all computer products, a stable power source is necessary for proper and reliable operation. It is even more important for processors that have high CPU clock rates. In areas where noisy power transmission is present, you may choose to install a line filter to shield the computer from noise. It is recommended that you also install a power surge protector to help avoid problems caused by power surges.

1-7 Advanced Power Management

The following new advanced power management features are supported by the motherboard.

Intel® Intelligent Power Node Manager (NM) (Available when the Supermicro Power Manager [SPM] is installed)

The Intel® Intelligent Power Node Manager (IPNM) provides your system with real-time thermal control and power management for maximum energy efficiency. Although IPNM Specification Version 1.5/2.0 is supported by the BMC (BaseBoard Management Controller), your system must also have IPNM-compatible Management Engine (ME) firmware installed to use this feature.

Note: Support for IPNM Specification Version 1.5 or Vision 2.0 depends on the power supply used in the system.

Management Engine (ME)

The Management Engine, which is an ARC controller embedded in the IOH (I/O Hub), provides Server Platform Services (SPS) to your system. The services provided by SPS are different from those provided by the ME on client platforms.

Chapter 2

Installation

2-1 Standardized Warning Statements

The following statements are industry-standard warnings, provided to warn the user of situations which have the potential for bodily injury. Should you have questions or experience difficulty, contact Supermicro's Technical Support department for assistance. Only certified technicians should attempt to install or configure components.

Read this section in its entirety before installing or configuring components in the Supermicro chassis.

Battery Handling

Warning!

There is a danger of explosion if the battery is replaced incorrectly. Replace the battery only with the same or equivalent type recommended by the manufacturer. Dispose of used batteries according to the manufacturer's instructions

電池の取り扱い

電池交換が正しく行われなかった場合、破裂の危険性があります。交換する電池はメーカーが推奨する型、または同等のものを使用下さい。使用済電池は製造元の指示に従って処分して下さい。

警告

电池更换不当会有爆炸危险。请只使用同类电池或制造商推荐的功能相当的电池更换原有电池。请按制造商的说明处理废旧电池。

警告

電池更換不當會有爆炸危險。請使用製造商建議之相同或功能相當的電池更換原有電池。請按照製造商的說明指示處理廢棄舊電池。

Warnung

Bei Einsetzen einer falschen Batterie besteht Explosionsgefahr. Ersetzen Sie die Batterie nur durch den gleichen oder vom Hersteller empfohlenen Batterietyp. Entsorgen Sie die benutzten Batterien nach den Anweisungen des Herstellers.

Attention

Danger d'explosion si la pile n'est pas remplacée correctement. Ne la remplacer que par une pile de type semblable ou équivalent, recommandée par le fabricant. Jeter les piles usagées conformément aux instructions du fabricant.

¡Advertencia!

Existe peligro de explosión si la batería se reemplaza de manera incorrecta. Reemplazar la batería exclusivamente con el mismo tipo o el equivalente recomendado por el fabricante. Desechar las baterías gastadas según las instrucciones del fabricante.

אזהרה !

קיימת סכנת פיצוץ של הסוללה במידה והוחלפה בדרך לא תקינה. יש להחליף את הסוללה בסוג התואם מחברת יצרן מומלצת.

סילוק הסוללות המשומשות יש לבצע לפי הוראות היצרן.

هناك خطر من انفجار في حالة استبدال البطارية بطريقة غير صحيحة فعليك استبدال البطارية
فقط بنفس النوع أو ما يعادلها كما أوصت به الشركة المصنعة
تخلص من البطاريات المستعملة وفقا لتعليمات الشركة الصانعة

경고!

배터리가 올바르게 교체되지 않으면 폭발의 위험이 있습니다. 기존 배터리와 동일하거나 제조사에서 권장하는 동등한 종류의 배터리로만 교체해야 합니다. 제조사의 안내에 따라 사용된 배터리를 처리하여 주십시오.

Waarschuwing

Er is ontploffingsgevaar indien de batterij verkeerd vervangen wordt. Vervang de batterij slechts met hetzelfde of een equivalent type die door de fabrikant aanbevolen wordt. Gebruikte batterijen dienen overeenkomstig fabrieksvoorschriften afgevoerd te worden.

Product Disposal

Warning!

Ultimate disposal of this product should be handled according to all national laws and regulations.

製品の廃棄

この製品を廃棄処分する場合、国の関係する全ての法律・条例に従い処理する必要があります。

警告

本产品的废弃处理应根据所有国家的法律和规章进行。

警告

本產品的廢棄處理應根據所有國家的法律和規章進行。

Warnung

Die Entsorgung dieses Produkts sollte gemäß allen Bestimmungen und Gesetzen des Landes erfolgen.

¡Advertencia!

Al deshacerse por completo de este producto debe seguir todas las leyes y reglamentos nacionales.

Attention

La mise au rebut ou le recyclage de ce produit sont généralement soumis à des lois et/ou directives de respect de l'environnement. Renseignez-vous auprès de l'organisme compétent.

2-2 Static-Sensitive Devices

Electrostatic Discharge (ESD) can damage electronic components. To avoid possible damage to your system board, it is important to handle it very carefully. The following measures are generally sufficient to protect your equipment from ESD.

Precautions

- Use a grounded wrist strap designed to prevent static discharge.
- Touch a grounded metal object before removing the board from the antistatic bag.
- Handle the board by its edges only; do not touch its components, peripheral chips, memory modules or gold contacts.
- When handling chips or modules, avoid touching their pins.
- Put the motherboard and peripherals back into their antistatic bags when not in use.
- For grounding purposes, make sure that your system chassis provides excellent conductivity between the power supply, the case, the mounting fasteners and the motherboard.

Unpacking

The motherboard is shipped in antistatic packaging to avoid static damage. When unpacking the board, make sure that the person handling it is static protected.

2-3 Motherboard Installation

All motherboards have standard mounting holes to fit different types of chassis. Make sure that the locations of all the mounting holes for both motherboard and chassis match. Although a chassis may have both plastic and metal mounting fasteners, metal ones are highly recommended because they ground the motherboard to the chassis. Make sure that the metal standoffs click in or are screwed in tightly. Then use a screwdriver to secure the motherboard onto the motherboard tray.

Tools Needed

- Phillips Screwdriver
- Pan head screws (11 pieces)
- Standoffs (11 pieces, if needed)

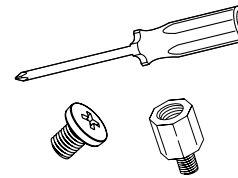

Location of Mounting Holes

There are eleven (11) mounting holes on this motherboard indicated by the arrows.

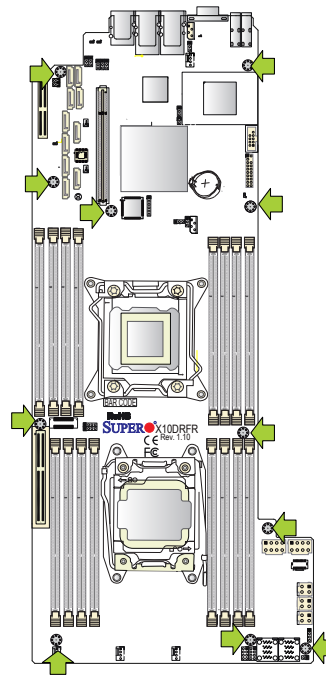

Caution: 1) To avoid damaging the motherboard and its components, please do not use a force greater than 8 lb/inch on each mounting screw during motherboard installation. 2) Some components are very close to the mounting holes. Please take precautionary measures to prevent damage to these components when installing the motherboard to the chassis.

Installing the Motherboard

Note: Always connect the power cord last, and always remove it before adding, removing or changing any hardware components. Install the I/O shield into the chassis.

1. Locate the mounting holes on the motherboard.

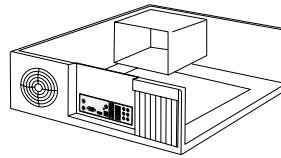

2. Locate the matching mounting holes on the chassis. Align the mounting holes on the motherboard against the mounting holes on the chassis.

3. Install standoffs in the chassis as needed.

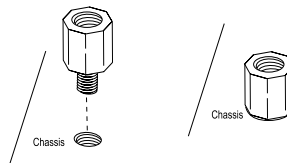

4. Install the motherboard into the chassis carefully to avoid damaging motherboard components.

5. Using the Phillips screwdriver, insert a Pan head #6 screw into a mounting hole on the motherboard and its matching mounting hole on the chassis.

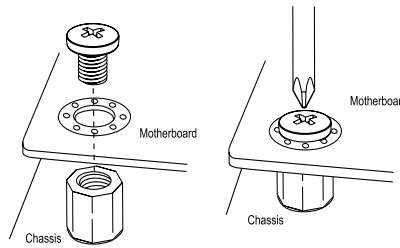

6. Repeat Step 5 to insert #6 screws into all mounting holes.

7. Make sure that the motherboard is securely placed in the chassis.

Note: Images displayed are is for illustration only. Your chassis or components might look different from those shown in this manual.

2-4 Processor and Heatsink Installation

Warning: When handling the processor package, avoid placing direct pressure on the label area. Also, improper CPU installation or socket/pin misalignment can cause serious damage to the CPU or the motherboard that will require RMA repairs. Be sure to read and follow all instructions thoroughly before installing your CPU and heatsink.

Notes:

- Always connect the power cord last, and always remove it before adding, removing or changing any hardware components. Make sure that you install the processor into the CPU socket before you install the CPU heatsink.
- If you buy a CPU separately, make sure that you use an Intel-certified multi-directional heatsink only.
- Make sure to install the motherboard into the chassis before you install the CPU heatsink.
- When receiving a motherboard without a processor pre-installed, make sure that the plastic CPU socket cap is in place, and none of the socket pins are bent; otherwise, contact your retailer immediately.
- Refer to the Supermicro website for updates on CPU support.

Installing the LGA2011 Processor

1. There are two load levers on the LGA2011 socket. To open the socket cover, first press and release the load lever labeled 'Open 1st'.

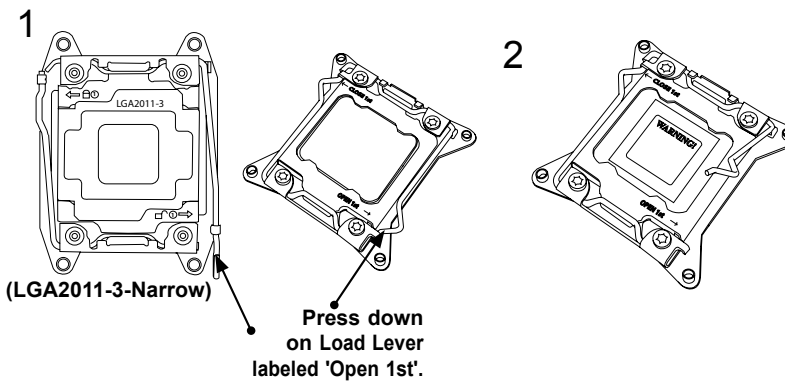

Note: the graphics provided in the manual are for illustration only. Your components may or may not look the same as the ones shown in this manual.

2. Press the second load lever labeled 'Close 1st' to release the load plate that covers the CPU socket from its locking position.

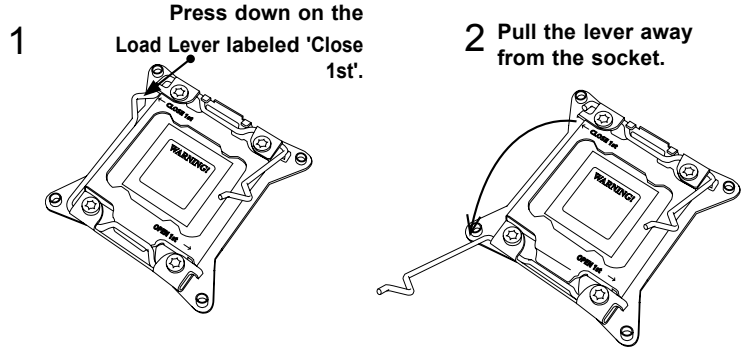

3. With the 'Close 1st' lever fully retracted, gently push down on the lever labeled 'Open 1st' to open the load plate. Lift the load plate to open it completely.

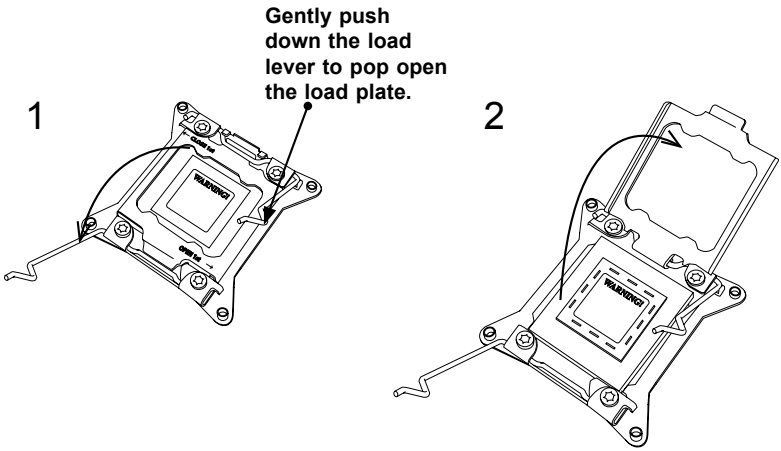

4. Using your thumb and the index finger, remove the 'WARNING' plastic cap from the socket.

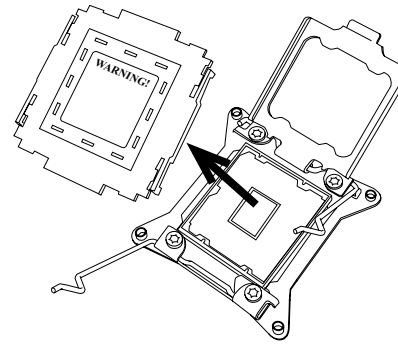

5. Use your thumb and index finger to hold the CPU on its edges. Align the CPU keys, which are semi-circle cutouts, against the socket keys.

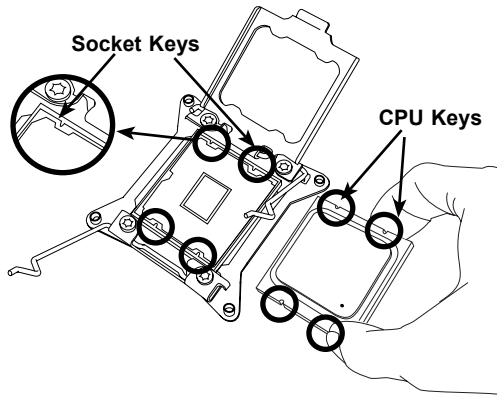

6. Once they are aligned, carefully lower the CPU straight down into the socket. (Do not drop the CPU on the socket. Do not move the CPU horizontally or vertically. Do not rub the CPU against the surface or against any pins of the socket to avoid damaging the CPU or the socket.)

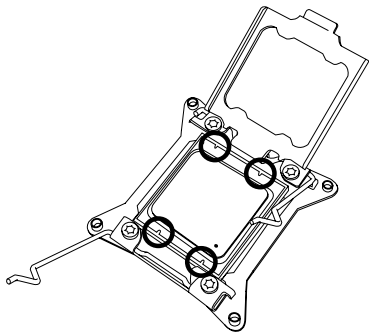

Warning: You can only install the CPU inside the socket in one direction. Make sure that it is properly inserted into the CPU socket before closing the load plate. If it doesn't close properly, do not force it as it may damage your CPU. Instead, open the load plate again and double-check that the CPU is aligned properly.

7. With the CPU inside the socket, inspect the four corners of the CPU to make sure that the CPU is properly installed.

8. Close the load plate with the CPU inside the socket. Lock the lever labeled 'Close 1st' first, then lock the lever labeled 'Open 1st' lever second. Use your thumb to gently push the load levers down to the lever locks.

1 **Gently close the load plate.**

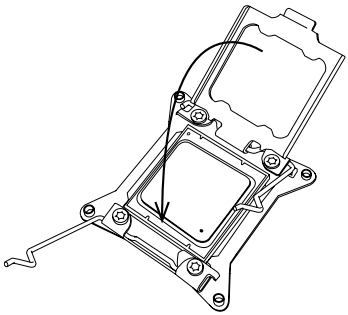

2 **Push down and lock lever labeled 'Close 1st'.**

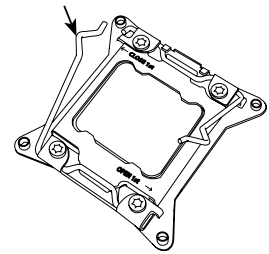

3

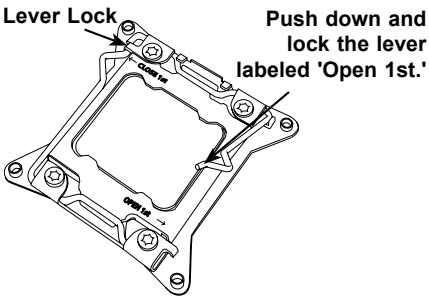

4

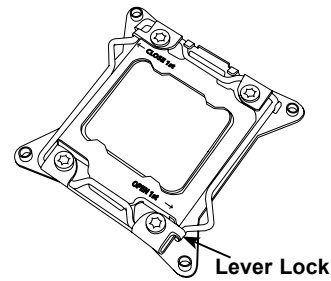

Installing a Passive Heatsink

1. Apply the proper amount of thermal grease to the heatsink.

2. Place the heatsink on top of the CPU so that the two mounting holes on the heatsink are aligned with those on the retention mechanism.

3. Insert two push-pins on the sides of the heatsink through the mounting holes on the motherboard, and turn the push-pins clockwise to lock them.

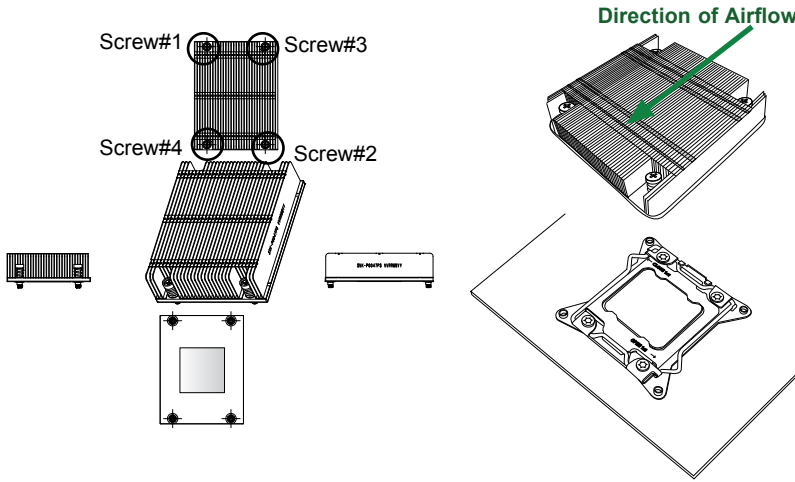

Note: For optimized airflow, please follow your chassis airflow direction to properly install the heatsink. Graphics included in this manual are for reference only. They might look different from the components installed in your system.

Removing the Passive Heatsink

Warning: We do not recommend that the CPU or the heatsink be removed. However, if you do need to remove the heatsink, please follow the instructions below to uninstall the heatsink to avoid damaging the CPU or other components.

1. Unplug the power cord from the power supply.

2. Press down the push-pin on the heatsink, and turn counter-clock-wise to loosen it. Repeat the same step to loosen the second push-pin.

3. Hold the heatsink as shown in the picture below, and gently wriggle the heat-sink to loosen it. (Do not use excessive force when wriggling the heatsink.)

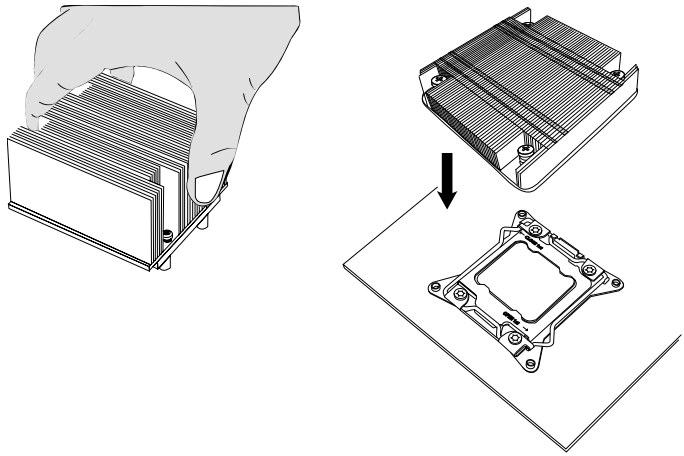

4. Once the heatsink is loosened, remove it from the motherboard.

2-5 Installing and Removing the Memory Modules

Note: Check Supermicro's website for recommended memory modules.

CAUTION

Exercise extreme care when installing or removing DIMM modules to prevent any possible damage.

Installing & Removing DIMMs

1. Insert the desired number of DIMMs into the memory slots, starting with P1-DIMMA1. (For best performance, please use the memory modules of the same type and speed in the same bank.)

2. Push the release tabs outwards on both ends of the DIMM slot to unlock it.

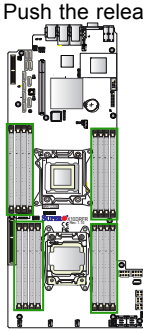

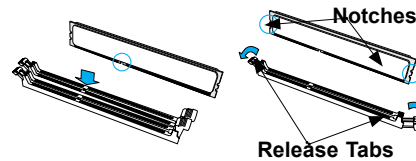

3. Align the key of the DIMM module with the receptive point on the memory slot.

4. Align the notches on both ends of the module against the receptive points on the ends of the slot.

5. Use two thumbs together to press the notches on both ends of the module straight down into the slot until the module snaps into place.

6. Press the release tabs to the locking positions to secure the DIMM module into the slot.

Press both notches straight down into the memory slot at the same time.

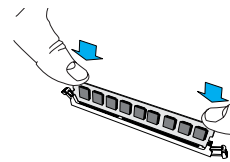

Removing Memory Modules

Press the release tabs on both ends of the memory module to unlock it. Once it is loosened, remove the DIMM module from the memory slot.

Memory Support for the X10DRFR(-N/-NT) Motherboard

The X10DRFR(-N/-NT) motherboard supports up to 1024 GB of Load Reduced (LRDIMM), and up to 512 GB of Registered (RDIMM) DDR4 (288-pin) ECC 2400/2133/1866/1600 MHz memory in 16 slots

Note: Memory speed support is pending on the processors installed in the system. For the latest CPU/memory updates, please refer to our website at http://www.supermicro.com/products/motherboard.

Processor & Memory Module Population Configuration

For memory to work properly, follow the tables below for memory installation.

Processors and their Corresponding Memory Modules								
CPU#	**Corresponding DIMM Modules**							
CPU 1	P1-DIMMA1	P1-DIMMB1	P1-DIMMC1	P1-DIMMD1	P1-DIMMA2	P1-DIMMB2	P1-DIMMC2	P1-DIMMD2
CPU2	P2-DIMME1	P2-DIMMF1	P2-DIMMG1	P2-DIMMH1	P2-DIMME2	P2-DIMM F2	P2-DIMMG2	P2-DIMMH2

Processor and Memory Module Population for Optimal Performance	
Number of CPUs+DIMMs	**CPU and Memory Population Configuration Table (For memory to work properly, please follow the instructions below.)**
1 CPU & 2 DIMMs	CPU1 P1-DIMMA1/P1-DIMMB1
1 CPU & 4 DIMMs	CPU1 P1-DIMMA1/P1-DIMMB1, P1-DIMMC1/P1-DIMMD1
1 CPU & 5~8 DIMMs	CPU1 P1-DIMMA1/P1-DIMMB1, P1-DIMMC1/P1-DIMMD1 + Any memory pairs in P1-DIMMA2/P1-DIMMB2/P1-DIMMC2/P1-DIMMD2 slots
2 CPUs & 4 DIMMs	CPU1 + CPU2 P1-DIMMA1/P1-DIMMB1, P2-DIMME1/P2-DIMMF1
2 CPUs & 6 DIMMs	CPU1 + CPU2 P1-DIMMA1/P1-DIMMB1/P1-DIMMC1/P1-DIMMD1, P2-DIMME1/P2-DIMMF1
2 CPUs & 8 DIMMs	CPU1 + CPU2 P1-DIMMA1/P1-DIMMB1/P1-DIMMC1/P1-DIMMD1, P2-DIMME1/P2-DIMMF1/P2-DIMMG1/P2-DIMMH1
2 CPUs & 9~16 DIMMs	CPU1/CPU2 P1-DIMMA1/P1-DIMMB1/P1-DIMMC1/P1-DIMMD1, P2-DIMME1/P2-DIMMF1/P2-DIMMG1/P2-DIMMH1 + Any memory pairs in P1, P2 DIMM slots
2 CPUs & 16 DIMMs	CPU1/CPU2 P1-DIMMA1/P1-DIMMB1/P1-DIMMC1/P1-DIMMD1, P2-DIMME1/P2-DIMMF1/P2-DIMMG1/P2-DIMMH1,P1-DIMMA2/P1-DIMMB2/P1-DIMMC2/P1-DIMMD2, P2-DIMME2/P2-DIMMF2/P2-DIMMG2/P2-DIMMH2

Populating DIMM Memory Modules for E5-2600v3-based Motherboards

Type	Ranks Per DIMM and Data Width	DIMM Capacity (GB)		Speed (MT/s); Voltage (V); Slot Per Channel (SPC) and DIMM Per Channel (DPC)	
				2 Slots Per Channel	
				1DPC	2DPC
		4Gb	8Gb	1.2V	1.2V
RDIMM	SRx4	8GB	16GB	2133	1866
RDIMM	SRx8	4GB	8GB	2133	1866
RDIMM	DRx8	8GB	16GB	2133	1866
RDIMM	DRx4	16GB	32GB	2133	1866
LRDIMM	QRx4	32GB	64GB	2133	2133
LRDIMM 3DS†	8Rx4	64GB	128GB	2133	2133

Populating DIMM Memory Modules for E5-2600v4-based Motherboards

Type	Ranks Per DIMM and Data Width	DIMM Capacity (GB)		Speed (MT/s); Voltage (V); Slot Per Channel (SPC) and DIMM Per Channel (DPC)	
				2 Slots Per Channel	
				1DPC	2DPC
		4Gb	8Gb	1.2V	1.2V
RDIMM	SRx4	8GB	16GB	2400	2133
RDIMM	SRx8	4GB	8GB	2400	2133
RDIMM	DRx8	8GB	16GB	2400	2133
RDIMM	DRx4	16GB	32GB	2400	2133
LRDIMM	QRx4	32GB	64GB	2400	2400
LRDIMM 3DS	8Rx4	64GB	128GB	2400	2400

2-6 Control Panel Connectors and I/O Ports

The I/O ports are color coded in conformance with the industry standards. See the picture below for the locations of the various I/O ports.

Back Panel Connectors and I/O Ports

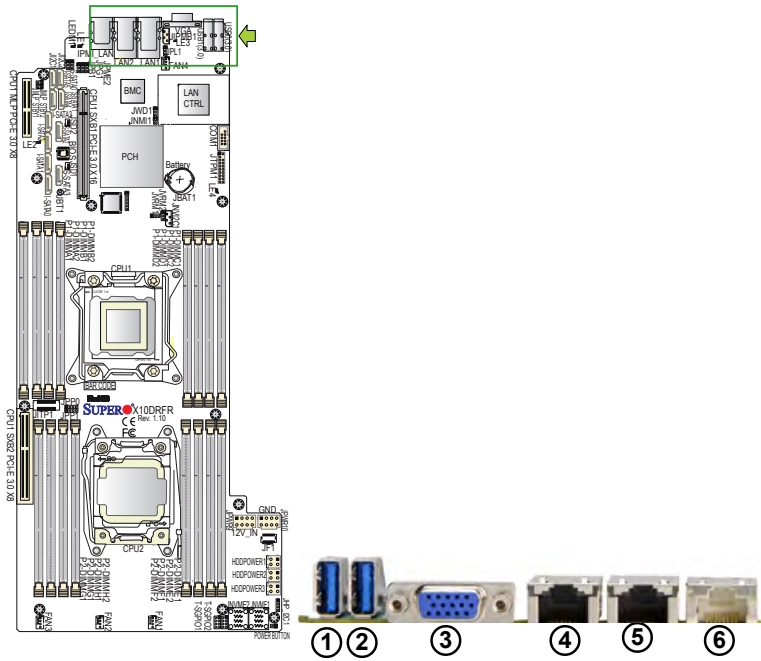

Back Panel I/O Port Locations and Definitions

1. Back panel USB 3.0 Port 0
2. Back panel USB 3.0 Port 1
3. Back panel VGA (Blue)
4. GLAN Port 1 (for X10DRFR(-N)), 10G-LAN (TLAN) Port 1 (for X10DRFR-NT)
5. GLAN Port 2 (for X10DRFR(-N)), 10G-LAN (TLAN) Port 1 (for X10DRFR-NT)
6. IPMI_Dedicated LAN

Universal Serial Bus (USB)

Two Universal Serial Bus (USB) 3.0 ports are located on the I/O back panel. Connect USB cables to use USB ports 0/1. (Cables are not included.) See the tables on the right for pin definitions.

Back Panel USB (USB 3.0 0/1) Pin Definitions	
Pin#	Definition
1	+5V
2	PO-
3	PO+
4	Ground
5	NA

Video Connector

A Video (VGA) connector is located next to USB Port 1 on the IO back panel. This connector is used to provide video to your monitor display. Refer to the board layout below for the location.

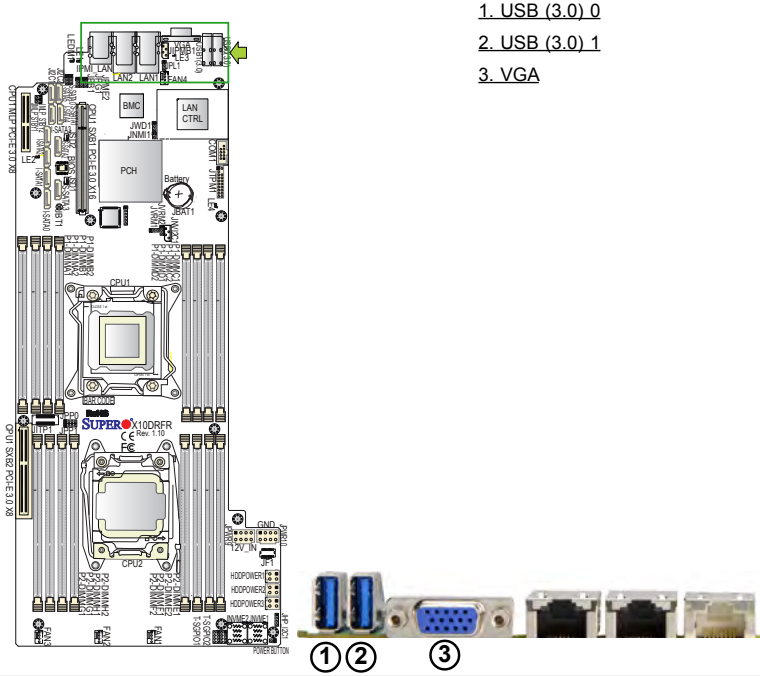

Ethernet Ports

Two Ethernet ports (LAN1/2) are located on the I/O back panel on the motherboard. These two LAN ports support Gigabit LAN connections on the X10DRFR(-N), and 10-Gigabit LAN (TLAN) connections on the X10DRFR-NT. In addition, an IPMI_Dedicated LAN is located next to LAN 2 on the back panel to provide IPMI/KVM support for the motherboard. All these ports accept RJ45 type cables. (**Note**: Please refer to the LED Indicator Section for LAN LED information.)

LAN Ports Pin Definition			
Pin#	Definition		
1	P2V5SB	10	SGND
2	TD0+	11	Act LED
3	TD0-	12	P3V3SB
4	TD1+	13	Link 100 LED (Yellow, +3V3SB)
5	TD1-	14	Link 1000 LED (Yellow, +3V3SB)
6	TD2+	15	Ground
7	TD2-	16	Ground
8	TD3+	17	Ground
9	TD3-	18	Ground

(NC: No Connection)

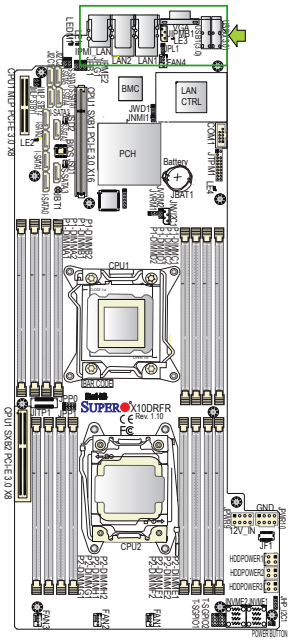

2-7 Connecting Cables

Power Connectors

There are two 8-pin power connectors and three 4-pin power connectors located on the motherboard. The 8-pin power connectors (JPWR9/JPWR10) provide power supply to the motherboard. The 4-pin power connectors (JPWR_HDD1/2/3) are used to for onboard HDDs. See the layout below for the locations of the power connectors.

12V 8-pin PWR Connector Pin Definitions		
Connect# Pins	Definition	
JPWR9	1-8	+12V
JPWR10	1-8	GND

12V 4-pin Power Connector Pin Definitions	
Pins	Definition
1	+12V
2-3	Ground
4	+5V

Warning: To ensure adequate power supply to your motherboard, be sure to connect all the power connectors mentioned above to your power supply For proper system operation.

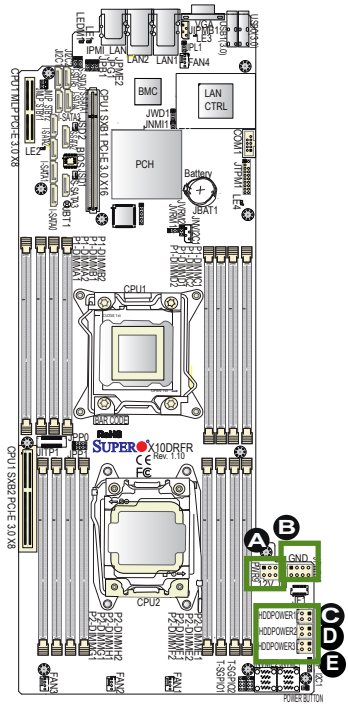

A. JPWR9: 8-pin PWR (12V-in) (Req'd)

B. JPWR10: 8-pin PWR (Ground) (Req'd)

C. HDDPOWER1 (JPWR_HDD1: HDD power supply)

D. HDDPOWER2 (JPWR_HDD2: HDD power supply)

E. HDDPOWER3 (JPWR_HDD3: HDD power supply)

COM Port Header

A COM port header is located next to the LAN controller. See the table on the right for pin definitions.

Serial Port Pin Definitions (COM1)			
Pin #	Definition	Pin #	Definition
1	CDC	6	DSR
2	RXD	7	RTS
3	TXD	8	CTS
4	DTR	9	RI
5	Ground		

IPMB I²C SMB

A System Management Bus header for the IPMI slot is located at JIPMB1. Connect an appropriate cable here to use the IPMB I²C connection on your system.

SMB Header Pin Definitions	
Pin#	Definition
1	Data
2	Ground
3	Clock
4	No Connection

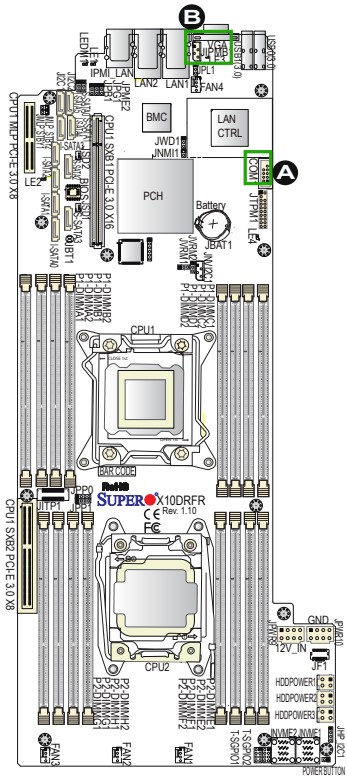

Fan Headers

This motherboard has four system cooling fan headers (Fan1-Fan4). All these 4-pin fans headers are backward compatible with the traditional 3-pin fans. However, fan speed control is available for 4-pin fans only and is controlled by thermal management via IPMI 2.0 interface. See the table on the right for pin definitions.

Fan Header Pin Definitions	
Pin#	Definition
1	Ground
2	+12V
3	Tachometer
4	PWR Modulation

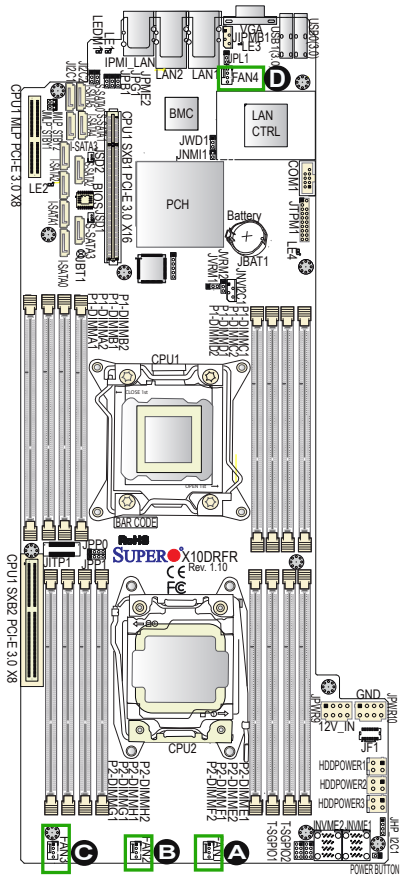

A. Fan1

B. Fan2

C. Fan3

D. Fan4

TPM Header/Port 80

A Trusted Platform Module/Port 80 header is located at JTPM1 to provide TPM support and Port 80 connection. Use this header to enhance system performance and data security. See the table on the right for pin definitions.

TPM/Port 80 Header Pin Definitions			
Pin #	Definition	Pin #	Definition
1	LCLK	2	GND
3	LFRAME#	4	<(KEY)>
5	LRESET#	6	+5V (X)
7	LAD 3	8	LAD 2
9	+3.3V	10	LAD1
11	LAD0	12	GND
13	SMB_CLK4	14	SMB_DAT4
15	+3V_DUAL	16	SERIRQ
17	GND	18	CLKRUN# (X)
19	LPCPD#	20	LDRQ# (X)

Non-Mask Interrupt Header

A Non-Mask Interrupt header is located at JNMI1 to provide NMI1 connection. Use this header to enhance system. See the layout for the location.

NMI Button Pin Definitions	
Pin#	Definition
1	Control
2	Ground

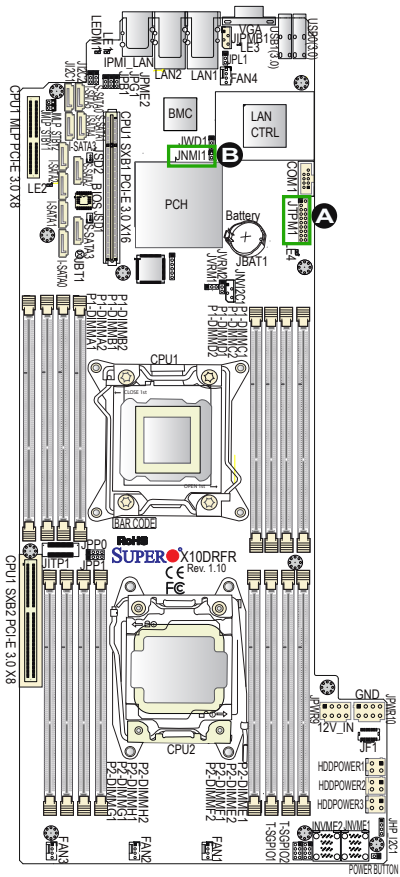

A. TPM/Port80

B. JNMI1

T-SGPIO 1/2 Headers

Two SGPIO (Serial-Link General Purpose Input/Output) headers (T-SGPIO 1/2) are located on the motherboard. These headers support Serial_Link interface for onboard SATA connections (T-SGPIO1: for I-SATA0-5, T-SGPIO2: for S-SATA0-3). See the table on the right for pin definitions.

T-SGPIO Pin Definitions			
Pin#	Definition	Pin	Definition
1	NC	2	NC
3	Ground	4	Data
5	Load	6	Ground
7	Clock	8	NC

NVM Express Connections (For X10DRFR-N/NT Only)

Two NVM Express ports are located on the motherboard. JNVME ports 1/2 provide high-speed, low-latency PCI-Exp. 3.0 x4 connections directly from the CPU to NVMe Solid State (SSD) drives. This greatly increases SSD data-throughput performance and significantly reduces PCI-E latency by simplifying driver/software requirements resulted from direct PCI-E interface from the CPU to the NVMe SSD drives.

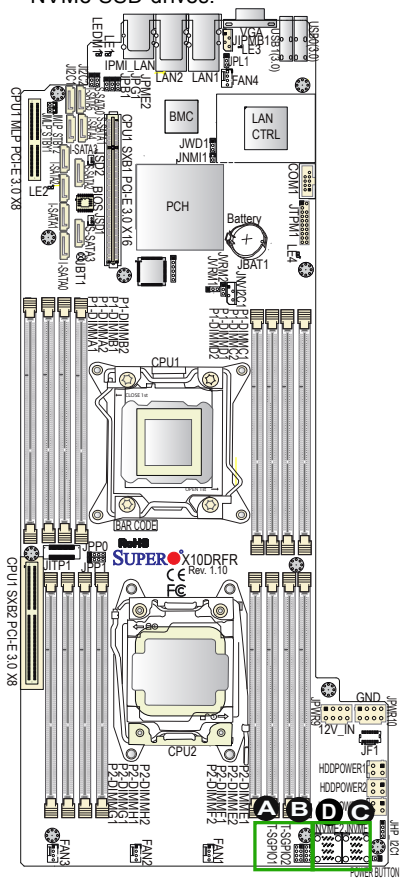

A. T-SGPIO 1

B. T-SGPIO 2

C. JNVME1

D. JNVME2

2-8 Jumper Settings

Explanation of Jumpers

To modify the operation of the motherboard, jumpers can be used to choose between optional settings. Jumpers create shorts between two pins to change the function of the connector. Pin 1 is identified with a square solder pad on the printed circuit board. See the motherboard layout pages for jumper locations.

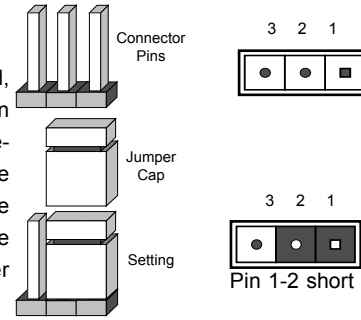

Note: On two pin jumpers, "Closed" means the jumper is on and "Open" means the jumper is off the pins.

LAN Ports 1/2 Enable

JPL1 is used to enable or disable onboard LAN1 and LAN2. LAN ports 1/2 support Gigabit LANs on the X10DRFR(/-N), and support 10G-LANs on the X10DRFR-NT. See the table on the right for jumper settings.

LAN Enable Jumper Settings	
Jumper Setting	Definition
1-2	Enabled (default)
2-3	Disabled

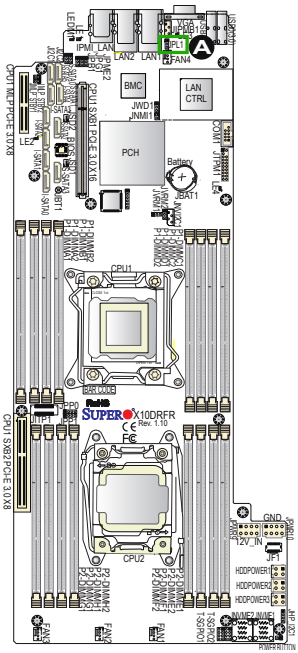

A. GLAN1/2 Enable (X10DRFR(/-N))

A. 10G-LAN1/2 Enable (X10DRFR-NT)

CMOS Clear

JBT1 is used to clear CMOS. Instead of pins, this "jumper" consists of contact pads to prevent accidental clearing of CMOS. To clear CMOS, use a metal object such as a small screwdriver to touch both pads at the same time to short the connection. Always remove the AC power cord from the system before clearing CMOS.

Note: Be sure to completely power-off the system, remove power cords, and the onboard CMOS battery before you short JBT1 to clear CMOS.

Watch Dog Enable/Disable

Watch Dog (JWD1) is a system monitor that can reboot the system when a software application hangs. Close pins 1-2 to reset the system if an application hangs. Close pins 2-3 to generate non-maskable interrupt signals for the application that hangs. See the table on the right for jumper settings. Watch Dog must also be enabled in the BIOS.

Watch Dog Jumper Settings	
Jumper Setting	Definition
Pins 1-2	Reset (default)
Pins 2-3	NMI
Open	Disabled

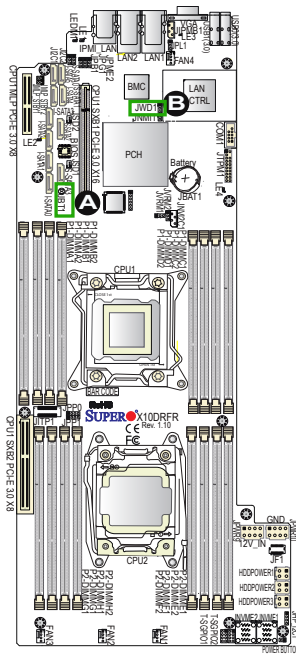

VGA Enable

Jumper JPG1 allows the user to enable the onboard VGA connector. The default setting is on pins 1/2 to enable the connection. See the table on the right for jumper settings.

VGA Enable Jumper Settings	
Jumper Setting	Definition
1-2	Enabled (Default)
2-3	Disabled

BMC Enable

Jumper JPB1 allows you to enable the onboard BMC (Baseboard Management) Controller to provide IPMI 2.0/KVM support on the motherboard. See the table on the right for jumper settings.

BMC Enable Jumper Settings	
Jumper Setting	Definition
Pins 1-2	BMC Enable (Default)
Pins 2-3	Normal

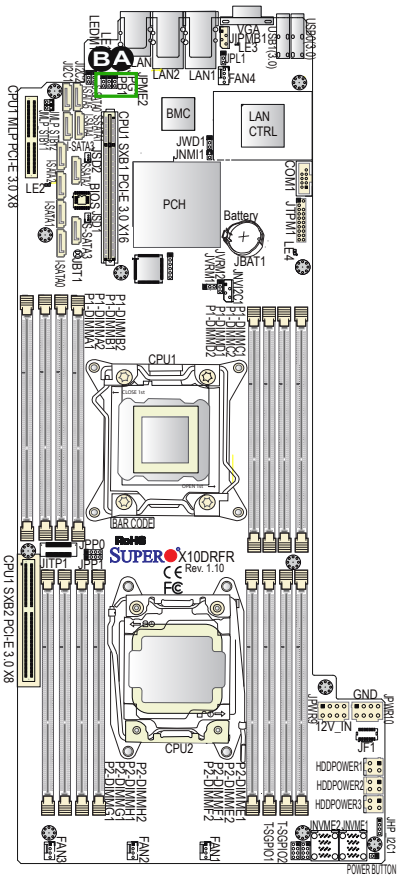

A. VGA Enabled

B. BMC Enabled

I²C Bus to PCI-Exp. Slots

Jumpers JI²C1 and JI²C2 allow you to connect the System Management Bus (I²C) to PCI-Express slots. The default setting is on pins 2/3 for normal operation. See the table on the right for jumper settings.

I²C to PCI-Exp Jumper Settings	
Jumper Setting	Definition
1-2	Enabled
2-3	Normal (Default)

Manufacturer Mode Select

Close pin 2 and pin 3 of Jumper JPME2 to bypass SPI flash security and force the system to operate in the Manufacturer mode, allowing the user to flash the system firmware from a host server for system setting modifications. See the table on the right for jumper settings.

ME Mode Select Jumper Settings	
Jumper Setting	Definition
1-2	Normal (Default)
2-3	Manufacture Mode

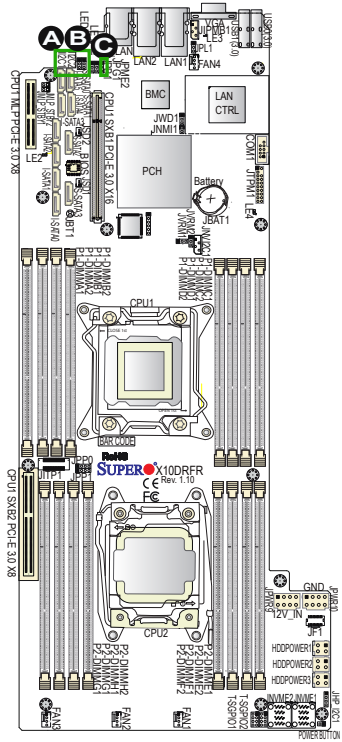

A. JI²C1

B. JI²C2

C. JPME2

2-9 Onboard LED Indicators

LAN LEDs

The LAN ports are located on the IO back panel on the motherboard. Each Ethernet LAN port has two LEDs. The yellow LED indicates activity. The Link LED on the left side of the LAN port may be green, amber or off to indicate the speed of the connection. See the tables at right for more information.

Rear View (when facing the rear side of the chassis)

GLAN Activity Indicator (Left) LED Settings		
Color	Status	Definition
Yellow	Flashing	Active

LAN Link LED Settings (For X10DRFR(/-N))	
Color	Definition
Off	No Connection, 10 Mbps
Green	100 Mbps
Amber	1 Gbps

LAN Link LED Settings (For X10DRFR-NT)	
Color	Definition
Off	No Connection, 10 or 100 Mbps
Green	10 Gbps
Amber	1 Gbps

IPMI_LAN LEDs

In addition to LAN1/LAN2, an IPMI_LAN is also located next to LAN2 port on the I/O back panel. The amber LED on the right indicates activity, while the green LED on the left indicates the speed of the connection. See the tables at right for more information.

IPMI LAN

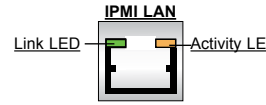

IPMI LAN Link LED (Left) & Activity LED (Right)		
	Color/State	Definition
Link (Left)	Green: Solid Amber: Solid	100 Mbps 1 Gbps
Activity (Right)	Amber: Blinking	Active

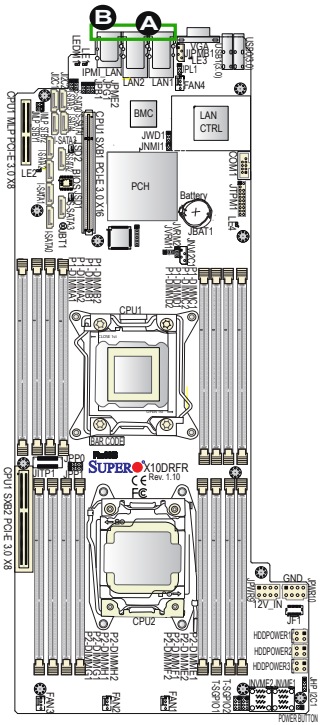

A. LAN1/2 LEDs

B. IPMI LAN LEDs

Standby_Power Good LED

The Standby_Power Good LED is located at LE4 on the motherboard. When LE4 is on, standby power is normal. See the table at right for more information.

Standby PWR Good LED Status	
State	Description
On	Standby PWR Normal

BMC Heartbeat LED

A BMCHeartbeat LED is located at LEDM1 on the motherboard. When LEDM1 is blinking, BMC functions normally. See the table at right for more information.

BMC Heartbeat LED Status	
Color/State	Definition
Green: Blinking	BMC: Normal

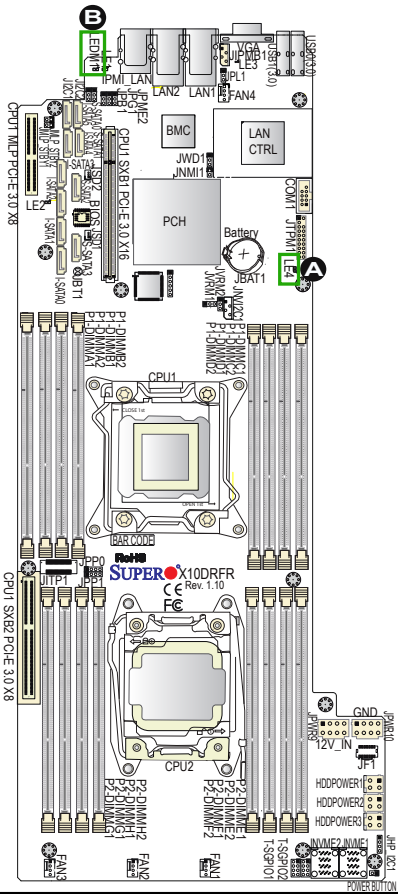

System_Power Good LED

The System_Power Good LED is located at LE2 on the motherboard. When LE2 is on, system power is normal. See the table at right for more information.

System PWR Good LED Status	
State	Description
On	System PWR Normal

SATA Activity LED

An onboard SATA Activity LED is located at LE3 on the motherboard. When LE3 is blinking, SATA is active. See the table at right for more information.

SATA Activity LED Status	
State	Description
Blinking	SATA Active

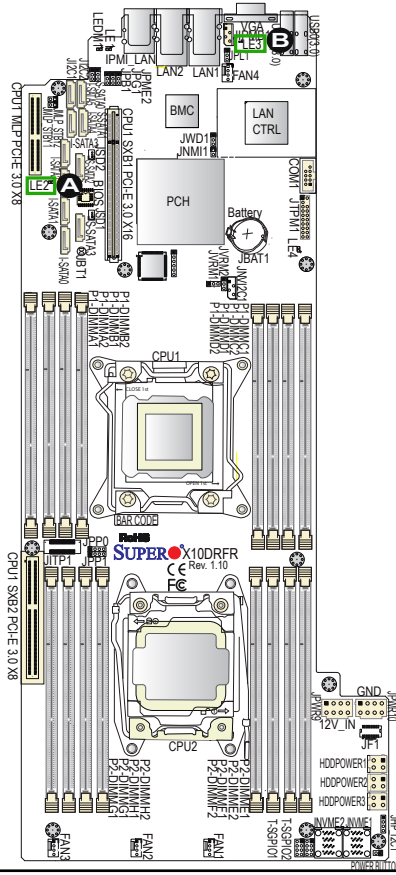

A. System PWR Good LED

B. SATA Activity LED

2-10 PCI-Express and Serial ATA Connections

PCI-Express 3.0 x16 Slot

A PCI-Express 3.0 x16 slot (CPU1 SXB1 PCI-E 3x16) is located on the motherboard. This slot supports PCI-Express 3.0 connections. Refer to the layout below for the location.

PCI-Express 3.0 x8 Slots

One PCI-Express 3.0 x8 slot (CPU1 MLP PCI-E 3x8) is located on the motherboard. This slot supports Micro Low-profile PCI-E 3.0 x8 add-on cards. In addition, CPU 1 SXB2, located next to P2-DIMMG1, also supports PCI-E 3.0x8. Refer to the layout below for the locations.

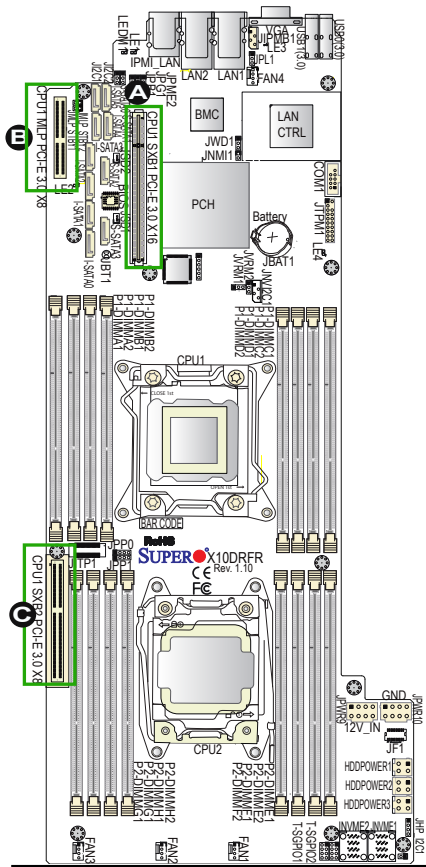

A. CPU1 SXB1 PCI-E 3.0 x16 Slot
B. CPU1 MLP PCI-E 3.0 x8 Slot
C. CPU1 SXB2 PCI-E 3.0 x8 Slot

Serial ATA Ports

Six Serial ATA Ports (I-SATA0-I-SATA5), supported by Intel PCH, are located on the motherboard. I-SATA0-3 support SATA 2.0, and I-SATA4/5 support SATA3 ports. In addition, four S-SATA connectors (S-SATA0-3), supported by the Intel SCU, are also located on the motherboard. S-SATA2/3, colored in yellow, are used with Supermicro SuperDOM (Disk-on-Module) connectors with power-pins built in. Supermicro SuperDOM connectors are backward-compatible with regular SATA HDDs and SATA DOMs. All SATA ports provide serial-link signal connections, which are faster than the connections of Parallel ATA. See the table on the right for pin definitions.

SATA 2/0/3.0 Pin Definitions	
Pin#	Definition
1	Ground
2	TX_P
3	TX_N
4	Ground
5	RX_N
6	RX_P
7	Ground

Note: Please refer to the Intel SATA HostRAID User's Guide posted on our website @ http://www.supermicro.com for more info on SATA.

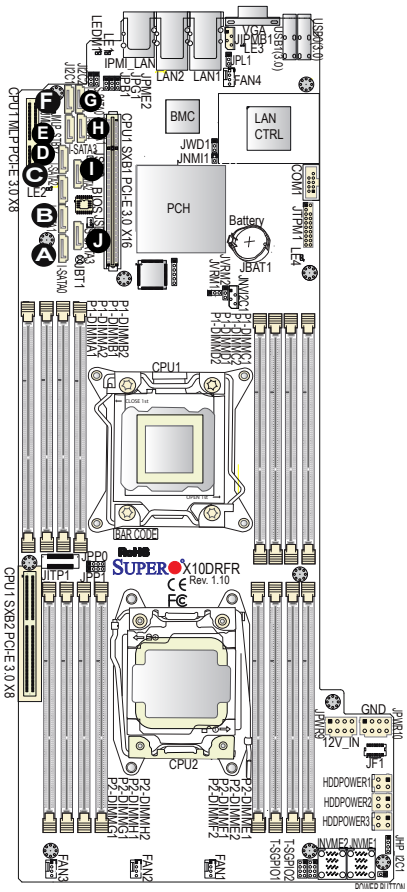
A
B
C
D
E
F
G
H
I
J
CPU1 TMLP PCI-E 3.0 X8
CPU1 SXB1 PCI-E 3.0 X16
CPU1 SXB2 PCI-E 3.0 X8
BMC
LAN CTRL
PCH
Battery
CPU1
CPU2
SUPERO X10DRFR
Rev. 1.10
BAR CODE
12V_IN
GND
HDDPOWER1
HDDPOWER2
HDDPOWER3
JF1
JTP1
JPW10
JPR3
FAN1
FAN2
FAN3
FAN4
LAN1
LAN2
IPMI_LAN
VGA
USB(3.0)
USB(2.0)
COM1
JTPM1
JBAT1
JWD1
JNMI1
JVRM1
JNVI2C1
JNVI2C2
P1-DIMMA1
P1-DIMMA2
P1-DIMMB1
P1-DIMMB2
P1-DIMMC1
P1-DIMMC2
P1-DIMMD1
P1-DIMMD2
P2-DIMMA1
P2-DIMMA2
P2-DIMMB1
P2-DIMMB2
P2-DIMMC1
P2-DIMMC2
P2-DIMMD1
P2-DIMMD2
P2-DIMMEF1
P2-DIMMEF2
P2-DIMMGH1
P2-DIMMGH2
T-SGPIO1
T-SGPIO2
NVME1
NVME2
HP_I2C1
JPI2C1
JPI2C2
JPB1
JPME2
JPL1
JUPDB1
LE1
LE2
LE3
LE4
LEDM1
JPW1
JPW2
JPW3
JPW4
JPW5
JPW6
JPW7
JPW8
JPW9
JPW10
JPG1
JPB2
JPI2C3
JPI2C4
JPI2C5
JPI2C6
JPI2C7
JPI2C8
JPI2C9
JPI2C10
JPI2C11
JPI2C12
JPI2C13
JPI2C14
JPI2C15
JPI2C16
JPI2C17
JPI2C18
JPI2C19
JPI2C20
JPI2C21
JPI2C22
JPI2C23
JPI2C24
JPI2C25
JPI2C26
JPI2C27
JPI2C28
JPI2C29
JPI2C30
JPI2C31
JPI2C32
JPI2C33
JPI2C34
JPI2C35
JPI2C36
JPI2C37
JPI2C38
JPI2C39
JPI2C40
JPI2C41
JPI2C42

Chapter 3

Troubleshooting

3-1 Troubleshooting Procedures

Use the following procedures to troubleshoot your system. If you have followed all of the procedures below and still need assistance, refer to the 'Technical Support Procedures' and/or 'Returning Merchandise for Service' section(s) in this chapter. Note: Always disconnect the power cord before adding, changing or installing any hardware components.

Before Power On

1. Make sure that there are no short circuits between the motherboard and chassis.

2. Disconnect all ribbon/wire cables from the motherboard, including those for the keyboard and mouse.

3. Remove all add-on cards.

4. Install CPU 1 first (making sure that it is fully seated) and connect the front panel connectors to the motherboard.

No Power

1. Make sure that no short circuits between the motherboard and the chassis.

2. Make sure that all power connectors are properly connected.

3. Check that the 115V/230V switch on the power supply is properly set, if available.

4. Turn the power switch on and off to test the system, if applicable.

5. The battery on your motherboard may be old. Check to verify that it still supplies ~3VDC. If it does not, replace it with a new one.

No Video

1. If the power is on, but you do not have video, remove all the add-on cards and cables.

2. Use the speaker to determine if any beep codes exist. Refer to Appendix A for details on beep codes.

System Boot Failure

If the system does not display POST or does not respond after the power is turned on, check the following:

1. Check for any error beep from the motherboard speaker.

- If there is no error beep, try to turn on the system without DIMM modules installed. If there is still no error beep, try to turn on the system again with only one processor installed in CPU Socket#1. If there is still no error beep, replace the motherboard.

- If there are error beeps, clear the CMOS settings by unplugging the power cord and contracting both pads on the CMOS Clear Jumper (JBT1). (Refer to Section 2-8 in Chapter 2.)

2. Remove all components from the motherboard, especially the DIMM modules. Make sure that the system power is on, and memory error beeps are activated.

3. Turn on the system with only one DIMM module installed. If the system boots, check for bad DIMM modules or slots by following the Memory Errors Troubleshooting procedure in this Chapter.

Losing the System's Setup Configuration

1. Make sure that you are using a high quality power supply. A poor quality power supply may cause the system to lose the CMOS setup information. Refer to Section 2-7 for details on recommended power supplies.

2. The battery on your motherboard may be old. Check to verify that it still supplies ~3VDC. If it does not, replace it with a new one.

3. If the steps indicated above do not fix the Setup Configuration problem, contact your vendor for repairs.

Memory Errors

When a No_Memory_Beep_Code is issued by the system, check the following:

1. Make sure that the memory modules are compatible with the system and that the DIMM modules are properly and fully installed. (For memory compatibility, refer to the Memory Compatibility Chart posted on our website @ http://www.supermicro.com.)

2. Check if DIMM modules with different speeds have been installed. It is strongly recommended that you use the same RAM speed for all DIMMs in the system.

3. Make sure that you are using the correct type of Registered (RDIMM)/Load Reduced (LRDIMM)ECC DDR4 memory modules as recommended by the manufacturer.

4. Check for bad DIMM modules or slots by swapping a single module among all memory slots and check the results.

5. Make sure that all memory modules are fully seated in their slots. Follow the instructions given in Section 2-5 in Chapter 2.

6. Please follow the instructions given in the DIMM Population Tables listed in Section 2-5 to install your memory modules.

When the System Becomes Unstable

A. When the system becomes unstable during or after OS installation, check the following:

1. CPU/BIOS support: Make sure that your CPU is supported, and you have the latest BIOS installed in your system.

2. Memory support: Make sure that the memory modules are supported by testing the modules using memtest86 or a similar utility.

   Note: Refer to the product page on our website http:\\www.supermicro.com for memory and CPU support and updates.

3. HDD support: Make sure that all hard disk drives (HDDs) work properly. Replace the bad HDDs with good ones.

4. System cooling: Check system cooling to make sure that all heatsink fans, CPU fans and system fans work properly. Check Hardware Monitoring set-

tings in the IPMI to make sure that the CPU and System temperatures are within the normal range. Also check the front panel Overheat LED, and make sure that the Overheat LED is not on.

5. Adequate power supply: Make sure that the power supply provides adequate power to the system. Make sure that all power connectors are connected. Please refer to our website for more information on minimum power requirement.

6. Proper software support: Make sure that the correct drivers are used.

B. When the system becomes unstable before or during OS installation, check the following:

1. Installation Devices: Make sure that the devices used for installation are working properly, including boot devices such as CD/DVD disc.

2. Cable connection: Check to make sure that all cables are connected and working properly.

3. Using minimum configuration for troubleshooting: Remove all unnecessary components (starting with add-on cards first), and use minimum configuration (with a CPU and a memory module installed) to identify the trouble areas. Refer to the steps listed in Section A above for proper troubleshooting procedures.

4. Identifying bad components by isolating them: If necessary, remove a component in question from the chassis, and test it in isolation to make sure that it works properly. Replace a bad component with a good one.

5. Check and change one component at a time instead of changing several items at the same time. This will help isolate and identify the problem.

6. To find out if a component is good, swap this component with a new one to see if the system will work properly. If so, then the old component is bad. You can also install the component in question in another system. If the new system works, the component is good and the old system has problems.

3-2 Technical Support Procedures

Before contacting Technical Support, please take the following steps. Also, please note that as a motherboard manufacturer, Supermicro also sells motherboards through its channels, so it is best to first check with your distributor or reseller for troubleshooting services. They should know of any possible problem(s) with the specific system configuration that was sold to you.

1. Please go through the 'Troubleshooting Procedures' and 'Frequently Asked Question' (FAQ) sections in this chapter or see the FAQs on our website (http://www.supermicro.com/) before contacting Technical Support.

2. BIOS upgrades can be downloaded from our website (http://www.supermicro.com).

3. If you still cannot resolve the problem, include the following information when contacting Supermicro for technical support:

- Motherboard model and PCB revision number

- BIOS release date/version (This can be seen on the initial display when your system first boots up.)

- System configuration

4. An example of a Technical Support form is on our website at (http://www.supermicro.com/RmaForm/).

- Distributors: For immediate assistance, please have your account number ready when placing a call to our technical support department. We can be reached by e-mail at support@supermicro.com.

3-3 Battery Removal and Installation

Battery Removal

To remove the onboard battery, follow the steps below:

1. Power off your system and unplug your power cable.
2. Locate the onboard battery as shown below.
3. Using a tool such as a pen or a small screwdriver, push the battery lock outwards to unlock it. Once unlocked, the battery will pop out from the holder.
4. Remove the battery.

Proper Battery Disposal

Warning: Please handle used batteries carefully. Do not damage the battery in any way; a damaged battery may release hazardous materials into the environment. Do not discard a used battery in the garbage or a public landfill. Please comply with the regulations set up by your local hazardous waste management agency to dispose of your used battery properly.

Battery Installation

1. To install an onboard battery, follow the steps 1& 2 above and continue below:
2. Identify the battery's polarity. The positive (+) side should be facing up.
3. Insert the battery into the battery holder and push it down until you hear a click to ensure that the battery is securely locked.

Warning: When replacing a battery, be sure to only replace it with the same type.

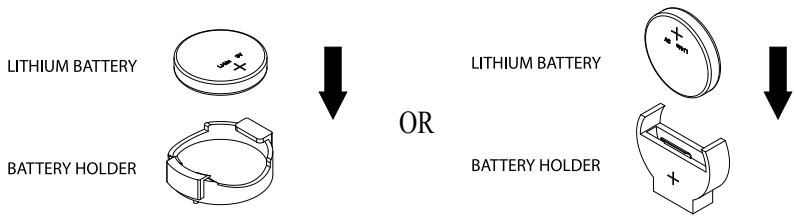

3-4 Frequently Asked Questions

Question: What are the various types of memory that my motherboard can support?

Answer: The motherboard supports DDR4 RDIMM/LRDIMM ECC modules. To enhance memory performance, do not mix memory modules of different speeds and sizes. Please follow all memory installation instructions given on Section 2-5 in Chapter 2.

Question: How do I update my BIOS?

It is recommended that you **do not** upgrade your BIOS if you are not experiencing any problems with your system. Updated BIOS files are located on our website at http://www.supermicro.com. Please check our BIOS warning message and the information on how to update your BIOS on our website. Select your motherboard model and download the BIOS file to your computer. Also, check the current BIOS revision to make sure that it is newer than your BIOS before downloading. You can choose from the zip file and the .exe file. If you choose the zip BIOS file, please unzip the BIOS file onto a bootable USB device. Run the batch file using the format FLASH.BAT filename.rom from your bootable USB device to flash the BIOS. Then, your system will automatically reboot.

Warning: Do not shut down or reset the system while updating the BIOS to prevent possible system boot failure!

Note: The SPI BIOS chip used on this motherboard cannot be removed. Send your motherboard back to our RMA Department at Supermicro for repair. For BIOS Recovery instructions, please refer to the AMI BIOS Recovery Instructions posted at http://www.supermicro.com.

Question: How do I handle the used battery?

Answer: Please handle used batteries carefully. Do not damage the battery in any way; a damaged battery may release hazardous materials into the environment. Do not discard a used battery in the garbage or a public landfill. Please comply with the regulations set up by your local hazardous waste management agency to dispose of your used battery properly. Refer to Section 3-3 on Page 3-6.

3-5 Returning Merchandise for Service

A receipt or copy of your invoice marked with the date of purchase is required before any warranty service will be rendered. You can obtain service by calling your vendor for a Returned Merchandise Authorization (RMA) number. When returning the motherboard to the manufacturer, the RMA number should be prominently displayed on the outside of the shipping carton, and the shipping package is mailed prepaid or hand-carried. Shipping and handling charges will be applied for all orders that must be mailed when service is complete. For faster service, You can also request a RMA authorization online (http://www.supermicro.com/RmaForm/).

This warranty only covers normal consumer use and does not cover damages incurred in shipping or from failure due to the alternation, misuse, abuse or improper maintenance of products.

During the warranty period, contact your distributor first for any product problems.

Chapter 4

BIOS

4-1 Introduction

This chapter describes the AMI BIOS setup utility for the X10DRFR(/-N/-NT). The ROM BIOS is stored in a Flash EEPROM and can be easily updated. This chapter describes the basic navigation of the AMI BIOS setup utility screens.

Note: For AMI BIOS recovery, please refer to the UEFI BIOS Recovery Instructions in Appendix C.

Starting BIOS Setup Utility

To enter the AMI BIOS setup utility screens, press the <Delete> key while the system is booting up.

Note: In most cases, the <Delete> key is used to invoke the AMI BIOS setup screen.

Each main BIOS menu option is described in this manual. The AMI BIOS setup menu screen has two main frames. The left frame displays all the options that can be configured. Grayed-out options cannot be configured. Options in blue can be configured by the user. The right frame displays the key legend. Above the key legend is an area reserved for a text message. When an option is selected in the left frame, it is highlighted in white. Often a text message will accompany it.

Note: the AMI BIOS has default text messages built in. Supermicro retains the option to include, omit, or change any of these text messages.

The AMI BIOS setup utility uses a key-based navigation system called "hot keys." Most of the AMI BIOS setup utility "hot keys" can be used at any time during the setup navigation process. These keys include <F1>, <F4>, <Enter>, <Esc>, arrow keys, etc.

Note: Options printed in **Bold** are default settings.

How To Change the Configuration Data

The configuration data that determines the system parameters may be changed by entering the AMI BIOS setup utility. This setup utility can be accessed by pressing <Del> at the appropriate time during system boot.

How to Start the Setup Utility

Normally, the only visible Power-On Self-Test (POST) routine is the memory test. As the memory is being tested, press the <Delete> key to enter the main menu of the AMI BIOS setup utility. From the main menu, you can access the other setup screens. An AMI BIOS identification string is displayed at the left bottom corner of the screen, below the copyright message.

Warning: Do not upgrade the BIOS unless your system has a BIOS-related issue. Flashing the wrong BIOS can cause irreparable damage to the system. In no event shall Supermicro be liable for direct, indirect, special, incidental, or consequential damages arising from a BIOS update. If you have to update the BIOS, do not shut down or reset the system while the BIOS is updating to avoid possible boot failure.

4-2 Main Setup

When you first enter the AMI BIOS setup utility, you will enter the Main setup screen. You can always return to the Main setup screen by selecting the Main tab on the top of the screen. The Main BIOS setup screen is shown below.

The following Main menu items will be displayed:

System Date/System Time

Use this option to change the system date and time. Highlight *System Date* or *System Time* using the arrow keys. Enter new values using the keyboard. Press the <Tab> key or the arrow keys to move between fields. The date must be entered in Day MM/DD/YYYY format. The time is entered in HH:MM:SS format.

Note: The time is in the 24-hour format. For example, 5:30 P.M. appears as 17:30:00.

Supermicro X10DRFR-NT

BIOS Version: This item displays the version of the BIOS ROM used in the system.

Build Date: This item displays the date when the version of the BIOS ROM used in the system was built.

Memory Information

Total Memory: This item displays the total size of memory available in the system.

Memory Speed: This item displays the default speed of the memory modules installed in the system.

4-3 Advanced Setup Configurations

Use the arrow keys to select Advanced setup and press <Enter> to access the submenu items:

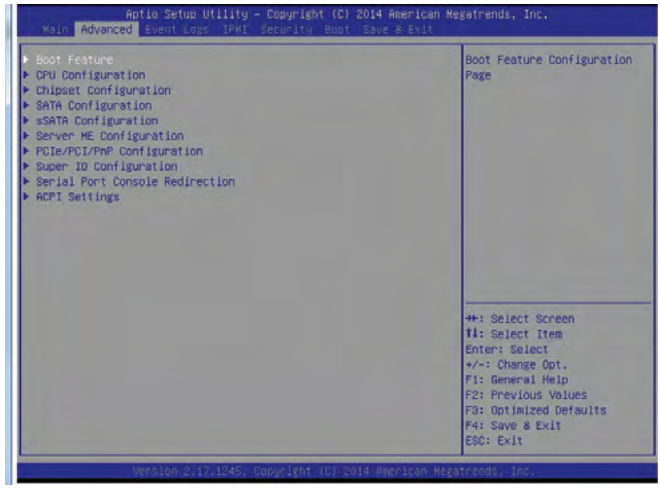

Warning: Take Caution when changing the Advanced settings. An incorrect value, an incorrect DRAM frequency, or an incorrect setting may cause the system to malfunction. When this occurs, restore the setting to the manufacture default setting.

▶Boot Feature

Quiet Boot

Use this feature to select the screen display between POST messages or the OEM logo at bootup. Select Disabled to display the POST messages. Select Enabled to display the OEM logo instead of the normal POST messages. The options are **Enabled** and Disabled.

AddOn ROM Display Mode

Use this item to set the display mode for the Option ROM. Select Keep Current to use the current AddOn ROM display setting. Select Force BIOS to use the Option ROM display mode set by the system BIOS. The options are **Force BIOS** and Keep Current.

Bootup Num-Lock State

Use this feature to set the Power-on state for the Numlock key. The options are Off and **On**.

Wait For 'F1' If Error

Select Enabled to force the system to wait until the 'F1' key is pressed if an error occurs. The options are Disabled and **Enabled**.

INT19 (Interrupt 19) Trap Response

Interrupt 19 is the software interrupt that handles the boot disk function. When this item is set to Immediate, the ROM BIOS of the host adaptors will "capture" Interrupt 19 at bootup immediately and allow the drives that are attached to these host adaptors to function as bootable disks. If this item is set to Postponed, the ROM BIOS of the host adaptors will not capture Interrupt 19 immediately and allow the drives attached to these adaptors to function as bootable devices at bootup. The options are **Immediate** and Postponed.

Re-try Boot

When EFI Boot is selected, the system BIOS will automatically reboot the system from an EFI boot device after its initial boot failure. Select Legacy Boot to allow the BIOS to automatically reboot the system from a Legacy boot device after its initial boot failure. The options are **Disabled**, Legacy Boot, and EFI Boot.

Power Configuration

Watch Dog Function

Select Enabled to allow the Watch Dog timer to reboot the system when it is inactive for more than 5 minutes. The options are Enabled and **Disabled.**

Power Button Function

This feature controls how the system shuts down when the power button is pressed. Select 4 Seconds Override for the user to power off the system after pressing and holding the power button for 4 seconds or longer. Select Instant Off to instantly power off the system as soon as the user presses the power button. The options are 4 Seconds Override and **Instant Off.**

Restore on AC Power Loss

Use this feature to set the power state after a power outage. Select Power-Off for the system power to remain off after a power loss. Select Power-On for the system power to be turned on after a power loss. Select Last State to allow the system to resume its last power state before a power loss. The options are Power-On, Stay-Off and **Last State**.

▶CPU Configuration

This submenu displays the following CPU information as detected by the BIOS. It also allows the user to configure CPU settings.

- Processor Socket
- Processor ID
- Processor Frequency
- Processor Max Ratio
- Processor Min Ratio
- Microcode Revision
- L1 Cache RAM
- L2 Cache RAM
- L3 Cache RAM
- CPU 1 Version
- CPU 2 Version

Clock Spread Spectrum

Select Enabled to allow the BIOS to attempt to reduce the level of Electromagnetic Interference caused by the components whenever needed. The options are **Disabled** and Enabled.

Hyper-Threading (All)

Select Enable to support Intel's Hyper-threading Technology to enhance CPU performance. The options are **Enable** and Disable.

Cores Enabled

This feature allows the user to determine the number of CPU cores to enable. Enter "0" to enable all cores. There are 14 cores available in the system. The default setting is **0**.

Execute-Disable Bit (Available if supported by the OS & the CPU)

Select Enable for Execute Disable Bit Technology support, which will allow the processor to designate areas in the system memory where an application code

can execute and where it cannot, thus preventing a worm or a virus from flooding illegal codes to overwhelm the processor to damage the system during an attack. The options are **Enable** and Disable. (Refer to Intel and Microsoft websites for more information.)

PPIN Control

Select Unlock/Enable to use the Protected-Processor Inventory Number (PPIN) in the system. The options are **Unlock/Enable** and Unlock/Disable.

Hardware Prefetcher (Available when supported by the CPU)

If set to Enable, the hardware prefetcher will prefetch streams of data and instructions from the main memory to the L2 cache to improve CPU performance. The options are Disable and **Enable**.

Adjacent Cache Prefetch (Available when supported by the CPU)

Select Enable for the CPU to prefetch both cache lines for 128 bytes as comprised. Select Disable for the CPU to prefetch both cache lines for 64 bytes. The options are Disable and **Enable**.

Note: Please reboot the system for changes on this setting to take effect. Please refer to Intel's website for detailed information.

DCU (Data Cache Unit) Streamer Prefetcher (Available when supported by the CPU)

If set to Enable, the DCU Streamer Prefetcher will prefetch data streams from the cache memory to the DCU (Data Cache Unit) to speed up data accessing and processing to enhance CPU performance. The options are Disable and **Enable**.

DCU IP Prefetcher

If set to Enable, the IP prefetcher in the DCU (Data Cache Unit) will prefetch IP addresses to improve network connectivity and system performance. The options are **Enable** and Disable.

Direct Cache Access (DCA)

Select Enable to use Intel DCA (Direct Cache Access) Technology to improve the efficiency of data transferring and accessing. The options are **Auto**, Enable, and Disable.

X2APIC

Select Enable to activate APIC (Advanced Programmable Interrupt Controller) support. The options are Enable and **Disable**.

AES-NI

Select Enable to use the Intel Advanced Encryption Standard (AES) New Instructions (NI) to ensure data security. The options are Enable and **Disable**.

Intel Virtualization Technology

Select Enable to use Intel Virtualization Technology support for Direct I/O VT-d support by reporting the I/O device assignments to the VMM (Virtual Machine Monitor) through the DMAR ACPI tables. This feature offers fully-protected I/O resource sharing across Intel platforms, providing greater reliability, security and availability in networking and data-sharing. The options are **Enable** and Disable.

▶ Advanced Power Management Configuration

Advanced Power Management Configuration

Power Technology

Select Energy Efficient to support power-saving mode. Select Custom to customize system power settings. Select Max Performance to optimize system performance. Select Disabled to disable power-saving settings. The options are Disable, **Energy Efficient**, and Custom.

If the option is set to Custom, the following items will display:

▶ CPU P State Control (Available when Power Technology is set to Custom)

EIST (P-states)

Select Enable to support EIST (Enhanced Intel SpeedStep Technology) to allow the system to automatically adjust processor voltage and core frequency to reduce power consumption and heat dissipation. The options are Disable and **Enable**.

Turbo Mode

Select Enable to use the Turbo Mode to boost system performance. The options are **Enable** and Disable.

P-state Coordination

Use this item to change the P-state (Power-Performance State) coordination type. P-state is also known as "SpeedStep" for Intel processors. Select HW_ALL to change the P-state coordination type for hardware components only. Select SW_ALL to change the P-state coordination type for all software installed in the system. Select SW_ANY to change the P-state coordination type for a software program in the system. The options are **HW_All,** SW_ALL, and SW_ANY.

▶ CPU C State Control (Available when Power Technology is set to Custom)

Package C State limit

Use this item to set the limit on the C-State package register. The options are C0/1 state, C2 state, C6 (non-Retention) state, and **C6 (Retention) state**.

CPU C3 Report

Select Enable to allow the BIOS to report the CPU C3 State (ACPI C2) to the operating system. During the CPU C3 State, the CPU clock generator is turned off. The options are Enable and **Disable.**

CPU C6 Report (Available when Power Technology is set to Custom)

Select Enable to allow the BIOS to report the CPU C6 state (ACPI C3) to the operating system. During the CPU C6 state, power to all cache is turned off. The options are **Enable** and Disable.

Enhanced Halt State (C1E)

Select Enable to use Enhanced Halt-State technology, which will significantly reduce the CPU's power consumption by reducing the CPU's clock cycle and voltage during a Halt-state. You will need to reboot the system for the change of this setting to take effect. The options are Disable and **Enable**.

▶ CPU T State Control (Available when Power Technology is set to Custom)

ACPI (Advanced Configuration Power Interface) T-States

Select Enable to support CPU throttling by the operating system to reduce power consumption. The options are **Enable** and Disable.

Energy Performance Tuning

Select Enable to support energy-performance tuning to enhance CPU performance. The options are Enable and **Disable**.

Energy Performance Bias Setting

Use this feature to select an appropriate fan setting to achieve maximum system performance (with maximum cooling) or maximum energy efficiency with maximum power saving). The fan speeds are controlled by the firmware management via IPMI 2.0. The options are Performance, **Balanced Performance**, Balanced Power, and Power.

Energy Efficiency Turbo Mode

Select Enable to use the Energy Efficiency Turbo mode to turn up the CPU core frequency to improve CPU performance without compromising energy efficiency. The options are **Enable** and Disable.

▶Chipset Configuration

Warning! Please set the correct settings for the items below. A wrong configuration setting may cause the system to become malfunction.

▶North Bridge

This feature allows the user to configure the settings for the Intel North Bridge.

▶IIO Configuration

EV DFX (Device Function On-Hide) Feature

When this feature is set to Enable, the EV_DFX Lock Bits that are located on a processor will always remain clear during electric tuning. The options are **Disable** and Enable.

▶IIO1 Configuration

IOU2 (II01 PCIe Port 1)

This item configures the PCI-E port Bifuraction setting for a PCI-E port specified by the user. The options are x4x4, x8, and **Auto**.

CPU1 SXB2 PCI-E 3.0 x8 Slot Link Speed

This item configures the link speed of a PCI-E port specified by the user. The options are Gen 1 (Generation 1) (2.5 GT/s), Gen 2 (Generation 2) (5 GT/s), and **Gen 3 (Generation 3) (8 GT/s)**.

IOU0 (II01 PCIe Port 2)

This item configures the PCI-E port Bifuraction setting for a PCI-E port specified by the user. The options are x4x4x4x4, x4x4x8, x8x4x4, x8x8, x16, and **Auto**.

CPU1 SXB1A PCI-E 3.0 x16/x8 Slot Link Speed

This item configures the link speed of a PCI-E port specified by the user. The options are Gen 1 (Generation 1) (2.5 GT/s), Gen 2 (Generation 2) (5 GT/s), and **Gen 3 (Generation 3) (8 GT/s)**.

IOU1 (II01 PCIe Port 3)

This item configures the PCI-E port Bifuraction setting for a PCI-E port specified by the user. The options are x4x4x4x4, x4x4x8, x8x4x4, x8x8, x16, and **Auto**.

CPU1 MLP PCI-E 3.0 x8 Slot Link Speed

This item configures the link speed of a PCI-E port specified by the user. The options are Gen 1 (Generation 1) (2.5 GT/s), Gen 2 (Generation 2) (5 GT/s), and **Gen 3 (Generation 3) (8 GT/s)**.

▶IIO2 Configuration

IOU0 (II02 PCIe Port 2)

This item configures the PCI-E port Bifuraction setting for a PCI-E port specified by the user. The options are x4x4x4x4, x4x4x8, x8x4x4, x8x8, x16, and **Auto**.

CPU2 NVME Port 1 Link Speed

This item configures the link speed of a PCI-E port specified by the user. The options are Gen 1 (Generation 1) (2.5 GT/s), Gen 2 (Generation 2) (5 GT/s), and **Gen 3 (Generation 3) (8 GT/s)**.

CPU2 NVME Port 2 Link Speed

This item configures the link speed of a PCI-E port specified by the user. The options are Gen 1 (Generation 1) (2.5 GT/s), Gen 2 (Generation 2) (5 GT/s), and **Gen 3 (Generation 3) (8 GT/s)**.

CPU2 NVME Port 3 Link Speed

This item configures the link speed of a PCI-E port specified by the user. The options are Gen 1 (Generation 1) (2.5 GT/s), Gen 2 (Generation 2) (5 GT/s), and **Gen 3 (Generation 3) (8 GT/s)**.

CPU2 NVME Port 4 Link Speed

This item configures the link speed of a PCI-E port specified by the user. The options are Gen 1 (Generation 1) (2.5 GT/s), Gen 2 (Generation 2) (5 GT/s), and **Gen 3 (Generation 3) (8 GT/s)**.

▶IOAT (Intel® IO Acceleration) Configuration

Enable IOAT

Select Enable to enable Intel I/OAT (I/O Acceleration Technology) support, which significantly reduces CPU overhead by leveraging CPU architectural improvements and freeing the system resource for other tasks. The options are **Enable** and Disable.

No Snoop

Select Enable to support no-snoop mode for each CB device. The options are **Disable** and Enable.

Relaxed Ordering

Select Enable to enable Relaxed Ordering support which will allow certain transactions to violate the strict-ordering rules of PCI bus for a transaction to be completed prior to other transactions that have already been queued earlier. The options are **Disable** and Enable.

▶ Intel VT for Directed I/O (VT-d)

Intel VT for Direct I/O (VT-d)

Intel® VT for Directed I/O (VT-d)

Select Enable to use Intel Virtualization Technology support for Direct I/O VT-d support by reporting the I/O device assignments to the VMM (Virtual Machine Monitor) through the DMAR ACPI Tables. This feature offers fully-protected I/O resource sharing across Intel platforms, providing greater reliability, security and availability in networking and data-sharing. The options are **Enable** and Disable.

Interrupt Remapping

Select Enable for Interrupt Remapping support to enhance system performance. The options are **Enable** and Disable.

▶QPI (Quick Path Interconnect) Configuration

QPI Status

The following information will display:

- Number of CPU
- Number of IIO
- Current QPI Link Speed
- Current QPI Link Frequency
- QPI Global MMIO Low Base/Limit
- QPI Global MMIO High Base/Limit
- QPI PCIe Configuration Base/Size

Link Frequency Select

Use this item to select the desired frequency for QPI Link connections. The options are 6.4GB/s, 8.0GB/s, 9.6GB/s, **Auto,** and Auto Limited.

Link L0p Enable

Select Enable for Link L0p support. The options are **Enable** and Disable.

Link L1 Enable

Select Enable for Link L1 support. The options are **Enable** and Disable.

COD Enable (Available when the OS and the CPU support this feature)

Select Enabled for Cluster-On-Die support to enhance system performance in cloud computing. The options are Enable, **Disable**, and Auto.

Early Snoop (Available when the OS and the CPU support this feature)

Select Enabled for Early Snoop support to enhance system performance. The options are Enable, Disable, and **Auto**.

Isoc Mode

Select Enabled for Isochronous support to meet QoS (Quality of Service) requirements. This feature is especially important for Virtualization Technology. The options are Enable and **Disable**.

▶Memory Configuration

Enforce POR

Select Enable to enforce POR restrictions on DDR4 frequency and voltage programming. The options are **Enabled** and Disabled.

Memory Frequency

Use this feature to set the maximum memory frequency for onboard memory modules. The options are **Auto**, 1333, 1400, 1600, 1800, 1867, 2000, 2133, 2200, and 2400.

Data Scrambling

Select Enabled to enable data scrambling to enhance system performance and data integrity. The options are **Auto**, Disabled and Enabled.

Enable ADR

Asynchronous DRAM Refresh (ADR), supported by the Haswell-EP/EN processors, provides a mechanism to preserve the key data in DDR4 NVDIMM system memory when an AC power-supply failure occurs. The options are **ADR + NVDIMMs** and Disabled.

Erase-Arm NVDIMMs (Non-Volatile DIMMs)

Non-volatile memory modules use flash memory to save data by erasing the old data first before writing (saving) data. When this item is set to Enabled, the BIOS will erase the flash memory located inside the NVDIMM and get it ready to save data. The options are **Enabled** and Disabled.

Restore NVDIMMs (Non-Volatile DIMMs)

Select Enabled to restore Non-Volatile DIMM modules. The options are **Enabled** and Disabled.

Interleave NVDIMMs (Non-Volatile DIMMs)

Select Enabled to support memory-rank interleaving for NVDIMM modules to enhance memory performance. The options are Enabled and **Disabled**.

DRAM RAPL (Running Average Power Limit) Baseline

Use this feature to set the run-time power-limit baseline for DRAM modules. The options are Disable, DRAM RAPL Mode 0, and **DRAM RAPL Mode 1**.

Set Throttling Mode

Throttling improves reliability and reduces power consumption in processors via automatic voltage control during processor idle states. The options are Disabled and **CLTT** (Closed Loop Thermal Throttling).

A7 Mode

Select Enabled to support the A7 (Addressing) mode to improve memory performance. The options are **Enable** and Disable.

▶DIMM Information

This item displays the status of a DIMM module as detected by the BIOS.

P1-DIMMA1 - P1-DIMMH2

▶Memory RAS (Reliability_Availability_Serviceability) Configuration

Use this submenu to configure the following Memory RAS settings.

RAS Mode

When Disable is selected, RAS is not supported. When Mirror is selected, the motherboard maintains two identical copies of all data in memory for data backup. When Lockstep is selected, the motherboard uses two areas of memory to run

the same set of operations in parallel to boost performance. The options are **Disable**, Mirror, and Lockstep Mode.

Memory Rank Sparing

Select Enable to enable memory-sparing support for memory ranks to improve memory performance. The options are **Disabled** and Enabled.

Patrol Scrub

Patrol Scrubbing is a process that allows the CPU to correct correctable memory errors detected on a memory module and send the correction to the requestor (the original source). When this item is set to Enable, the IO hub will read and write back one cache line every 16K cycles if there is no delay caused by internal processing. By using this method, roughly 64 GB of memory behind the IO hub will be scrubbed every day. The options are **Enable** and Disable.

Patrol Scrub Interval

This feature allows you to decide how many hours the system should wait before the next complete patrol scrub is performed. Use the keyboard to enter a value from 0-24. The Default setting is **24**.

Demand Scrub

Demand Scrubbing is a process that allows the CPU to correct correctable memory errors found on a memory module. When the CPU or I/O issues a demand-read command, and the read data from memory turns out to be a correctable error, the error is corrected and sent to the requestor (the original source). Memory is updated as well. Select Enable to use Demand Scrubbing for ECC memory correction. The options are **Enable** and Disable.

Device Tagging

Select Enable to support device tagging. The options are **Disable** and Enable.

▶South Bridge Configuration

The following South Bridge information will display:

▶USB Configuration

- USB Module Version
- USB Devices

Legacy USB Support

Select Enabled to support onboard legacy USB devices. Select Auto to disable legacy support if there are no legacy USB devices present. Select Disable to have all USB devices available for EFI applications only. The options are **Enabled**, Disabled and Auto.

XHCI (Extensible Host Controller Interface) Hand-Off

This is a work-around solution for operating systems that do not support XHCI (Extensible Host Controller Interface) hand-off. The XHCI ownership change should be claimed by the XHCI driver. The settings are **Enabled** and Disabled.

EHCI (Enhanced Host Controller Interface) Hand-Off

This item is for operating systems that do not support Enhanced Host Controller Interface (EHCI) hand-off. When this item is enabled, EHCI ownership change will be claimed by the EHCI driver. The settings are Enabled and **Disabled**.

Port 60/64 Emulation

Select Enabled for I/O port 60h/64h emulation support, which in turn, will provide complete legacy USB keyboard support for the operating systems that do not support legacy USB devices. The options are Disabled and **Enabled**.

USB 3.0 Support

Select Enabled for USB 3.0 support. The options are Smart Auto, **Auto**, Enabled, Disabled and Manual.

EHCI1

Select Enabled to enable EHCI (Enhanced Host Controller Interface) support on USB 2.0 connector #1 (-at least one USB 2.0 connector should be enabled for EHCI support.) The options are Disabled and **Enabled**.

EHCI2

Select Enabled to enable EHCI (Enhanced Host Controller Interface) support on USB 2.0 connector #2 (-at least one USB 2.0 connector should be enabled for EHCI support.) The options are Disabled and **Enabled**.

XHCI (Extensible Host Controller Interface) Pre-Boot Drive

Select Enabled to enable XHCI (Extensible Host Controller Interface) support on a pre-boot drive specified by the user. The options are Enabled and **Disabled**.

▶SATA Configuration

When this submenu is selected, AMI BIOS automatically detects the presence of the SATA devices that are supported by the Intel PCH chip and displays the following items:

SATA Controller

This item enables or disables the onboard SATA controller supported by the Intel PCH chip. The options are **Enabled** and Disabled.

Configure SATA as

Select IDE to configure a SATA drive specified by the user as an IDE drive. Select AHCI to configure a SATA drive specified by the user as an AHCI drive. Select RAID to configure a SATA drive specified by the user as a RAID drive. The options are IDE, **AHCI**, and RAID.

**If the item above "Configure SATA as" is set to AHCI, the following items will display:*

Support Aggressive Link Power Management

When this item is set to Enabled, the SATA AHCI controller manages the power usage of the SATA link. The controller will put the link to a low power state when the I/O is inactive for an extended period of time, and the power state will return to normal when the I/O becomes active. The options are **Enabled** and Disabled.

SATA Port 0~ Port 5

This item displays the information detected on the installed SATA drive on the particular SATA port.

- Model number of drive and capacity
- Software Preserve Support

Port 0~ Port 5

Select Enabled to enable a SATA port specified by the user. The options are Disabled and Enabled.

Port 0 ~ Port 5 Hot Plug

Select Enabled to enable hot-plugging support for a port specified by the user, which will allow the user to replace a SATA disk drive installed on this port without shutting down the system. The options are **Enabled** and Disabled.

Port 0 ~ Port 5 Spin Up Device

On an edge detect from 0 to 1, set this item to allow the PCH to initialize the device. The options are Enabled and **Disabled**.

Port 0 ~ Port 5 SATA Device Type

Use this item to specify if the SATA port specified by the user should be connected to a Solid State drive or a Hard Disk Drive. The options are **Hard Disk Drive** and Solid State Drive.

**If the item above "Configure SATA as" is set to IDE, the following items will display:*

Serial ATA Port 0~ Port 5

This item indicates that a SATA port specified by the user is installed (present) or not.

Port 0 ~ Port 5 SATA Device Type (Available when a SATA port is detected)

Use this item to specify if the SATA port specified by the user should be connected to a Solid State drive or a Hard Disk Drive. The options are **Hard Disk Drive** and Solid State Drive.

**If the item above "Configure SATA as" is set to RAID, the following items will display:*

Support Aggressive Link Power Management

When this item is set to Enabled, the SATA AHCI controller manages the power usage of the SATA link. The controller will put the link to a low power state when the I/O is inactive for an extended period of time, and the power state will return to normal when the I/O becomes active. The options are **Enabled** and Disabled.

SATA RAID Option ROM/UEFI Driver

Select EFI to load the EFI driver for system boot. Select Legacy to load a legacy driver for system boot. The options are Disabled, EFI, and **Legacy**.

SATA/sSATA RAID Boot Select

Select SATA Controller to use a device supported by the SATA connector for system boot. Select sSATA Controller to use a device supported by the sSATA connector for system boot. The options are SATA Controller, **sSATA Controller**, and Both.

SATA Port 0~ Port 5

This item displays the information detected on the installed SATA drives on the particular SATA port.

- Model number of drive and capacity
- Software Preserve Support

Port 0~ Port 5

Select Enabled to enable a SATA port specified by the user. The options are Disabled and **Enabled**.

Port 0 ~ Port 5 Hot Plug

Select Enabled to enable hot-plugging support for a port specified by the user, which will allow the user to replace a SATA disk drive installed on this port without shutting down the system. The options are **Enabled** and Disabled.

Port 0 ~ Port 5 Spin Up Device

On an edge detect from 0 to 1, set this item to allow the PCH to start a COMRESET initialization to the device. The options are Enabled and **Disabled**.

Port 0 ~ Port 5 SATA Device Type

Use this item to specify if the SATA port specified by the user should be connected to a Solid State drive or a Hard Disk Drive. The options are **Hard Disk Drive** and Solid State Drive.

▶sSATA Configuration

When this submenu is selected, AMI BIOS automatically detects the presence of the SATA devices that are supported by the PCH-sSATA controller and displays the following items:

sSATA Controller

This item enables or disables the onboard SATA controller supported by the Intel PCH-sSATA controller. The options are **Enabled** and Disabled.

Configure sSATA as

Select IDE to configure an sSATA drive specified by the user as an IDE drive. Select AHCI to configure an sSATA drive specified by the user as an AHCI drive. Select RAID to configure an sSATA drive specified by the user as a RAID drive. The options are IDE, **AHCI**, and RAID.

**If the item above "Configure sSATA as" is set to AHCI, the following items will display:*

Support Aggressive Link Power Management

When this item is set to Enabled, the SATA AHCI controller manages the power usage of the SATA link. The controller will put the link to a low power state when the I/O is inactive for an extended period of time, and the power state will return to normal when the I/O becomes active. The options are **Enabled** and Disabled.

sSATA Port 0~ Port 3

This item displays the information detected on the installed on the sSATA port. specified by the user.

- Model number of drive and capacity
- Software Preserve Support

sSATA Port 0~ Port 3

Select Enabled to enable an sSATA port specified by the user. The options are Disabled and Enabled.

sSATA Port 0 ~ Port 3 Hot Plug

Select Enabled to enable hot-plugging support for a port specified by the user, which will allow the user to replace a sSATA disk drive installed on this port without shutting down the system. The options are **Enabled** and Disabled.

sSATA Port 0 ~ Port 3 Spin Up Device

On an edge detect from 0 to 1, set this item to allow the PCH to start a COMRE-SET initialization to the device. The options are Enabled and **Disabled**.

Port 0 ~ Port 3 sSATA Device Type

Use this item to specify if the sSATA port specified by the user should be connected to a Solid State drive or a Hard Disk Drive. The options are **Hard Disk Drive** and Solid State Drive.

**If the item above "Configure sSATA as" is set to IDE, the following items will display:*

sSATA Port 0~ Port 3

This item indicates that an sSATA port specified by the user is installed (present) or not.

Port 0 ~ Port 3 sSATA Device Type (Available when a SATA port is detected)

Use this item to specify if the sSATA port specified by the user should be connected to a Solid State drive or a Hard Disk Drive. The options are **Hard Disk Drive** and Solid State Drive.

**If the item above "Configure sSATA as" is set to RAID, the following items will display:*

Support Aggressive Link Power Management

When this item is set to Enabled, the SATA AHCI controller manages the power usage of the SATA link. The controller will put the link to a low power state when the I/O is inactive for an extended period of time, and the power state will return to normal when the I/O becomes active. The options are **Enabled** and Disabled.

sSATA RAID Option ROM/UEFI Driver

Select EFI to load the EFI driver for system boot. Select Legacy to load a legacy driver for system boot. The options are Disabled, EFI, and **Legacy**.

SATA/sSATA RAID Boot Select

Select SATA Controller to use a device supported by the SATA connector for system boot. Select sSATA Controller to use a device supported by the sSATA connector for system boot. The options are SATA Controller, **sSATA Controller**, and Both.

sSATA Port 0~ Port 3

This item displays the information detected on the installed sSATA drives on the particular sSATA port.

- Model number of drive and capacity
- Software Preserve Support

sSATA Port 0~ Port 3

Select Enabled to enable an sSATA port specified by the user. The options are Disabled and Enabled.

sSATA Port 0 ~ Port 3 Hot Plug

This feature designates this port for hot plugging. Set this item to Enabled for hot-plugging support, which will allow the user to replace an sSATA drive without shutting down the system. The options are **Enabled** and Disabled.

sSATA Port 0 ~ Port 3 Spin Up Device

On an edge detect from 0 to 1, set this item to allow the PCH to start a COMRE-SET initialization to the device. The options are Enabled and **Disabled**.

Port 0 ~ Port 3 sSATA Device Type

Use this item to specify if the sSATA port specified by the user should be connected to a Solid State drive or a Hard Disk Drive. The options are **Hard Disk Drive** and Solid State Drive.

▶Server ME (Management Engine) Configuration

This feature displays the following system ME configuration settings.

- General ME Configuration
- Operational Firmware Version
- Recovery Firmware Version
- ME Firmware Features
- ME Firmware Status #1
- ME Firmware Status #2
  - Current State
  - Error Code

▶PCIe/PCI/PnP Configuration

The following PCI information will be displayed:

- PCI Bus Driver Version

PCI Latency Timer

Use this item to configure the PCI latency timer for a device installed on a PCI bus. Select 32 to set the PCI latency timer to 32 PCI clock cycles. The options are **32**, 64, 96, 128, 160, 192, 224 and 248 (PCI Bus Clocks).

PCI PERR/SERR Support

Select Enabled for the system to log an error event when a PERR (PCI/PCI-E Parity Error) or a SERR (System Error) occurs. The options are Enabled and **Disabled**.

Above 4G Decoding (Available if the system supports 64-bit PCI decoding)

Select Enabled to decode a PCI device that supports 64-bit in the space above 4G Address. The options are Enabled and **Disabled**.

SR-IOV (Available if the system supports Single-Root Virtualization)

Select Enabled for Single-Root IO Virtualization support. The options are Enabled and **Disabled.**

Maximum Payload

Select Auto for the system BIOS to automatically set the maximum payload value for a PCI-E device to enhance system performance. The options are **Auto**, 128 Bytes, and 256 Bytes.

Maximum Read Request

Select Auto for the system BIOS to automatically set the maximum size for a read request for a PCI-E device to enhance system performance. The options are **Auto**, 128 Bytes, 256 Bytes, 512 Bytes, 1024 Bytes, 2048 Bytes, and 4096 Bytes.

ASPM Support

Use this item to set the Active State Power Management (ASPM) level for a PCI-E device. Select Auto for the system BIOS to automatically set the ASPM level based on the system configuration. Select Disabled to disable ASPM support. The options are **Disabled** and Auto.

Warning: Enabling ASPM support may cause some PCI-E devices to fail!

MMIOHBase

Use this item to select the base memory size according to memory-address mapping for the base address above 4G decoding. The options are **56T**, 48T, 24T, 512G, and 256G.

MMIO High Size

Use this item to select the high memory size according to memory-address mapping for for the base address above 4G decoding. . The options are **256G**, 128G, 512G, and 1024G.

CPU1 SXB2 PCI-E 3.0 X8 Slot OP OPROM/CPU1 SXB1 PCI-E 3.0 X16 Slot OPROM/CPU1 MLP PCI-E 3.0X8 Slot OPROM

Select Enabled to enable Option ROM support to boot the computer using a device installed on the slot specified by the user. The options are Disabled, **Legacy** and EFI.

Onboard LAN Option ROM Type

Select Enabled to enable Option ROM support to boot the computer using a device installed on the slot specified by the user. The options are **Legacy** and EFI.

Onboard LAN1 Option ROM/Onboard LAN2 Option ROM

Use this option to select the type of device installed in LAN Port1, LAN Port2 or the onboard video device used for system boot. The default setting for LAN1 Option ROM is **PXE** and for LAN2 Option ROM is **Disabled**.

Onboard NVME1 Option ROM/Onboard NVME2 Option ROM/Onboard NVME3 Option ROM/Onboard NVME4 Option ROM

Use this option to select the type of the device installed on an NVME port specified by the user to be used for system boot. The options are Disabled and **EFI**.

Onboard Video Option ROM

Use this option to select the type of the device installed on the onboard video port to be used for system boot. The options are Disabled, **Legacy**, and EFI.

VGA Priority

Use this item to select the graphics device to be used as the primary video display for system boot. The options are **Onboard** and Offboard.

Network Stack

Select Enabled to enable PXE (Preboot Execution Environment) or UEFI (Unified Extensible Firmware Interface) for network stack support. The options are Enabled and **Disabled**.

▶Super IO Configuration

Super IO Chip AST2400

▶Serial Port 1 Configuration/Serial Port 2 Configuration

Serial Port 1/Serial Port 2

Select Enabled to enable the onboard serial port specified by the user. The options are **Enabled** and Disabled.

Device Settings

This item displays the base I/O port address and the Interrupt Request address of a serial port specified by the user.

Change Port 1 Settings/Change Port 2 Settings

This feature specifies the base I/O port address and the Interrupt Request address of Serial Port 1 or Serial Port 2. Select **Auto** for the BIOS to automatically assign the base I/O and IRQ address to a serial port specified.

The options for Serial Port 1 are **Auto**, (IO=3F8h; IRQ=4), (IO=3F8h; IRQ=3, 4, 5, 6, 7, 9, 10, 11, 12), (IO=2F8h; IRQ=3, 4, 5, 6, 7, 9, 10, 11, 12); (IO=3E8h; IRQ=3, 4, 5, 6, 7, 9, 10, 11, 12), and (IO=2E8h; IRQ=3, 4, 5, 6, 7, 9, 10, 11, 12).

The options for Serial Port 2 are **Auto**, (IO=3F8h; IRQ=4), (IO=3F8h; IRQ=3, 4, 5, 6, 7, 9, 10, 11, 12), (IO=2F8h; IRQ=3, 4, 5, 6, 7, 9, 10, 11, 12); (IO=3E8h; IRQ=3, 4, 5, 6, 7, 9, 10, 11, 12), and (IO=2E8h; IRQ=3, 4, 5, 6, 7, 9, 10, 11, 12).

Serial Port 2 Attribute

Select SOL to use COM Port 2 as a Serial_Over_LAN (SOL) port for console redirection. The options are COM and **SOL**.

▶Serial Port Console Redirection

COM 1

COM 1 Console Redirection

Select Enabled to enable COM Port 1 Console Redirection, which will allow a client machine to be connected to a host machine at a remote site for networking. The options are **Disabled** and Enabled.

**If the item above set to Enabled, the following items will become available for configuration:*

▶COM1 Console Redirection Settings

Terminal Type

Use this item to select the target terminal emulation type for Console Redirection. Select VT100 to use the ASCII Character set. Select VT100+ to add color and function key support. Select ANSI to use the Extended ASCII Character Set. Select VT-UTF8 to use UTF8 encoding to map Unicode characters into one or more bytes. The options are ANSI, VT100, **VT100+**, and VT-UTF8.

Bits Per second

Use this item to set the transmission speed for a serial port used in Console Redirection. Be sure to use the same speed in the host computer and the client computer. A lower transmission speed may be required for long and busy lines. The options are 9600, 19200, 38400, 57600 and **115200** (bits per second).

Data Bits

Use this item to set the data transmission size for Console Redirection. The options are 7 (Bits) and **8 (Bits)**.

Parity

A parity bit can be sent along with regular data bits to detect data transmission errors. Select Even if the parity bit is set to 0, and the number of 1's in data bits is even. Select Odd if the parity bit is set to 0, and the number of 1's in data bits is odd. Select None if you do not want to send a parity bit with your data bits in transmission. Select Mark to add a mark as a parity bit to be sent along with the data bits. Select Space to add a Space as a parity bit to be sent with your data bits. The options are **None**, Even, Odd, Mark and Space.

Stop Bits

A stop bit indicates the end of a serial data packet. Select 1 Stop Bit for standard serial data communication. Select 2 Stop Bits if slower devices are used. The options are **1** and 2.

Flow Control

Use this item to set the flow control for Console Redirection to prevent data loss caused by buffer overflow. Send a "Stop" signal to stop sending data when the receiving buffer is full. Send a "Start" signal to start sending data when the receiving buffer is empty. The options are **None** and Hardware RTS/CTS.

VT-UTF8 Combo Key Support

Select Enabled to enable VT-UTF8 Combination Key support for ANSI/VT100 terminals. The options are **Enabled** and Disabled**.**

Recorder Mode

Select Enabled to capture the data displayed on a terminal and send it as text messages to a remote server. The options are **Disabled** and Enabled.

Resolution 100x31

Select Enabled for extended-terminal resolution support. The options are Disabled and **Enabled**.

Legacy OS Redirection Resolution

Use this item to select the number of rows and columns used in Console Redirection for legacy OS support. The options are 80x24 and **80x25**.

Putty KeyPad

Use this item to configure the settings for the function keys and the key pad for Putty, which is a terminal emulator designed for the Windows OS. The options are **VT100**, LINUX, XTERMR6, SCO, ESCN, and VT400.

Redirection After BIOS Post

Use this item to enable or disable legacy Console Redirection after BIOS POST (Power-on Self-Test). When Bootloader is selected, legacy Console Redirection is disabled before booting the OS. When Always Enable is selected, legacy Console Redirection remains enabled upon OS bootup. The options are **Always Enable** and Bootloader.

SOL/COM2 Console Redirection

Select Enabled to use the SOL port for Console Redirection. The options are **Enabled** and Disabled.

**If the item above set to Enabled, the following items will become available for user's configuration:*

▶SOL/COM2 Console Redirection Settings

This feature specifies how the host computer exchanges data with the client computer, which is the remote computer used by the user.

Terminal Type

Use this item to select the target terminal emulation type for Console Redirection. Select VT100 to use the ASCII Character set. Select VT100+ to add color and function key support. Select ANSI to use the Extended ASCII Character Set. Select VT-UTF8 to use UTF8 encoding to map Unicode characters into one or more bytes. The options are ANSI, VT100, **VT100+**, and VT-UTF8.

Bits Per second

Use this item to set the transmission speed for a serial port used in Console Redirection. Be sure to use the same speed in the host computer and the client computer. A lower transmission speed may be required for long and busy lines. The options are 9600, 19200, 38400, 57600 and **115200** (bits per second).

Data Bits

Use this item to set the data transmission size for Console Redirection. The options are 7 (Bits) and **8 (Bits)**.

Parity

A parity bit can be sent along with regular data bits to detect data transmission errors. Select Even if the parity bit is set to 0, and the number of 1's in data bits is even. Select Odd if the parity bit is set to 0, and the number of 1's in data bits is odd. Select None if you do not want to send a parity bit with your data bits in transmission. Select Mark to add a mark as a parity bit to be sent along with the data bits. Select Space to add a Space as a parity bit to be sent with your data bits. The options are **None**, Even, Odd, Mark and Space.

Stop Bits

A stop bit indicates the end of a serial data packet. Select 1 Stop Bit for standard serial data communication. Select 2 Stop Bits if slower devices are used. The options are **1** and 2.

Flow Control

Use this item to set the flow control for Console Redirection to prevent data loss caused by buffer overflow. Send a "Stop" signal to stop sending data when

the receiving buffer is full. Send a "Start" signal to start data-sending when the receiving buffer is empty. The options are **None** and Hardware RTS/CTS.

VT-UTF8 Combo Key Support

Select Enabled to enable VT-UTF8 Combination Key support for ANSI/VT100 terminals. The options are **Enabled** and Disabled**.**

Recorder Mode

Select Enabled to capture the data displayed on a terminal and send it as text messages to a remote server. The options are **Disabled** and Enabled.

Resolution 100x31

Select Enabled for extended-terminal resolution support. The options are Disabled and **Enabled**.

Legacy OS Redirection Resolution

Use this item to select the number of rows and columns used in Console Redirection for legacy OS support. The options are 80x24 and **80x25**.

Putty KeyPad

Use this item to configure the settings for the function keys and the key pad for Putty, which is a terminal emulator designed for the Windows OS. The options are **VT100**, LINUX, XTERMR6, SCO, ESCN, and VT400.

Redirection After BIOS Post

Use this item to enable or disable legacy Console Redirection after BIOS POST (Power-On Self-Test). When this feature is set to Bootloader, legacy Console Redirection is disabled before booting the OS. When this feature is set to Always Enable, legacy Console Redirection remains enabled upon OS boot. The options are **Always Enable** and Bootloader.

▶Legacy Console Redirection Settings

This feature specifies how the host computer exchanges data with the client computer via Legacy Console Redirection.

Legacy Serial Redirection Port

The feature selects a serial port in a client server to be used by Legacy Console Redirection to communicate with a remote host server. The options are **COM1** and COM2/SOL.

Serial Port for Out-of-Band Management/Windows Emergency Management Services (EMS)

The submenu allows the user to configure Console Redirection settings to support Out-of-Band Serial Port management.

EMS Console Redirection

Select Enabled to use a COM port selected by the user for EMS Console Redirection. The options are Enabled and **Disabled.**

**If the item above set to Enabled, the following items will become available for user's configuration:*

►EMS Console Redirection Settings (Available when EMS Console Redirection is enabled)

This feature specifies how the host computer exchanges data with the client computer, which is the remote computer used by the user.

Out-of-Band Management Port

The feature selects a serial port in a client server to be used by the Windows Emergency Management Services (EMS) to communicate with a remote host server. The options are **COM1 (Console Redirection)** and COM2/SOL (Console Redirection).

Terminal Type

Use this item to select the target terminal emulation type for Console Redirection. Select VT100 to use the ASCII character set. Select VT100+ to add color and function key support. Select ANSI to use the extended ASCII character set. Select VT-UTF8 to use UTF8 encoding to map Unicode characters into one or more bytes. The options are ANSI, VT100, VT100+, and **VT-UTF8**.

Bits Per Second

This item sets the transmission speed for a serial port used in Console Redirection. Be sure to use the same speed in both host computer and the client computer. A lower transmission speed may be required for long and busy lines. The options are 9600, 19200, 57600, and **115200** (bits per second).

Flow Control

Use this item to set the flow control for Console Redirection to prevent data loss caused by buffer overflow. Send a "Stop" signal to stop data-sending when the receiving buffer is full. Send a "Start" signal to start data-sending when the receiving buffer is empty. The options are **None,** Hardware RTS/CTS, and Software Xon/Xoff.

The following settings will be displayed: Data Bits, Parity, Stop Bits

▶Trusted Computing (Available when a TPM device is installed and detected by the BIOS)

Configuration

Security Device Support

If this feature and the TPM jumper on the motherboard are both set to Enabled, onboard security devices will be enabled for TPM (Trusted Platform Module) support to enhance data integrity and network security. Please reboot the system for a change on this setting to take effect. The options are Enabled and **Disabled**.

TPM State

Select Enabled to use TPM (Trusted Platform Module) settings to enhance system data security. Please reboot your system for any change on the TPM state to take effect. The options are Disabled and **Enabled**.

Pending Operation

Use this item to schedule a TPM-related operation to be performed by a security device for system data integrity. Your system needs to reboot for a pending TPM command to be performed. The options are **0**, Enable Take Ownership, Disable Take Ownership, and TPM Clear.

Note: Your system will reboot to carry out a pending TPM operation.

Current Status Information

This item displays the status of the TPM support on this motherboard.

▶ACPI Settings

WHEA Support

Select Enabled to support the Windows Hardware Error Architecture (WHEA) platform and provide a common infrastructure for the system to handle hardware errors within the Windows OS environment to reduce system crashes and to enhance system recovery and health monitoring. The options are **Enabled** and Disabled.

High Precision Timer

Select Enabled to activate the High Precision Event Timer (HPET) that produces periodic interrupts at a much higher frequency than a Real-time Clock (RTC) does in synchronizing multimedia streams, providing smooth playback and reducing the dependency on other timestamp calculation devices, such as an x86 RDTSC Instruction embedded in the CPU. The High Performance Event Timer is used to replace the 8254 Programmable Interval Timer. The options are **Enabled** and Disabled.

NUMA (Available when the OS supports this feature)

Select Enabled to enable Non-Uniform Memory Access support to enhance system performance. The options are **Enabled** and Disabled.

4-4 Event Logs

Use this feature to configure Event Log settings.

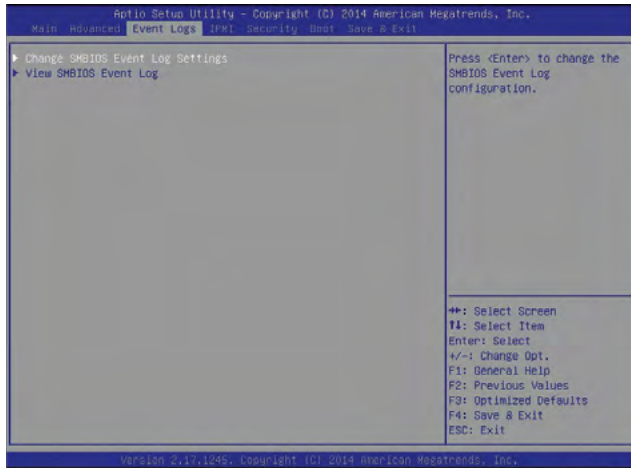

▶Change SMBIOS Event Log Settings

This feature allows the user to configure SMBIOS Event settings.

Enabling/Disabling Options

SMBIOS Event Log

Select Enabled to enable SMBIOS (System Management BIOS) Event Logging during system boot. The options are **Enabled** and Disabled.

Runtime Error Logging Support

Select Enable to support Runtime Error Logging. The options are **Enable** and Disable. If this item is set to Enable, the following item will be available for configuration:

Erasing Settings

Erase Event Log

Select Enabled to erase all error events in the SMBIOS (System Management BIOS) log before an event logging is initialized at bootup. The options are **No** and Yes.

When Log is Full

Select Erase Immediately to immediately erase all errors in the SMBIOS event log when the event log is full. Select Do Nothing for the system to do nothing when the SMBIOS event log is full. The options are **Do Nothing** and Erase Immediately.

SMBIOS Event Log Standard Settings

Log System Boot Event

Select Enabled to log system boot events. The options are **Disabled** and Enabled.

MECI (Multiple Event Count Increment)

Enter the increment value for the multiple event counter. Enter a number between 1 to 255. The default setting is **1**.

METW (Multiple Event Count Time Window)

This item is used to determine how long (in minutes) should the multiple event counter wait before generating a new event log. Enter a number between 0 to 99. The default setting is **60**.

Note: Please reboot the system for the changes to take effect.

▶View SMBIOS Event Log

This item allows the user to view the event in the SMBIOS event log. Select this item and press <Enter> to view the status of an event in the log. The following categories are displayed:

Date/Time/Error Code/Severity

4-5 IPMI

Use this feature to configure Intelligent Platform Management Interface (IPMI) settings.

IPMI Firmware Revision

This item indicates the IPMI firmware revision used in your system.

IPMI Status

This item indicates the status of the IPMI firmware installed in your system.

▶System Event Log

Enabling/Disabling Options

SEL Components

Select Enabled to enable all system event logging support at bootup. The options are **Enabled** and Disabled.

Erasing Settings

Erase SEL

Select Yes, On next reset to erase all system event logs upon next system reboot. Select Yes, On every reset to erase all system event logs upon each system reboot. Select No to keep all system event logs after each system reboot. The options are **No,** Yes, On next reset, and Yes, On every reset.

When SEL is Full

This feature allows the user to determine what the AMI BIOS should do when the system event log is full. Select Erase Immediately to erase all events in the log when the system event log is full. The options are **Do Nothing** and Erase Immediately.

Note: After making changes on a setting, be sure to reboot the system for the changes to take effect.

▶BMC Network Configuration

The following items will be displayed:

- IPMI LAN Selection
- IPMI Network Link Status

Update IPMI LAN Configuration

Select Yes for the system BIOS to automatically reset the following IPMI settings at next system boot. The options are Yes and **No**.

Configuration Address Source (Available when the item above - Update IPMI LAN Configuration is set to Yes)

Use this item to select the IP address source for this computer. If Static is selected, you will need to know the IP address of this computer and enter it to the system manually in the field. If DHCP is selected, AMI BIOS will search for a DHCP (Dynamic Host Configuration Protocol) server attached to the network and request the next available IP address for this computer. The options are **DHCP** Unspecified, and Static.

Station IP Address

This item displays the Station IP address for this computer. This should be in decimal and in dotted quad form (i.e., 192.168.10.253).

Subnet Mask

This item displays the sub-network that this computer belongs to. The value of each three-digit number is separated by dots and it should not exceed 255.

Station MAC Address

This item displays the Station MAC address for this computer. Mac addresses are 6 two-digit hexadecimal numbers.

Gateway IP Address

This item displays the Gateway IP address for this computer. This should be in decimal and in dotted quad form (i.e., 192.168.10.253).

4-6 Security Settings

This menu allows the user to configure the following security settings for the system.

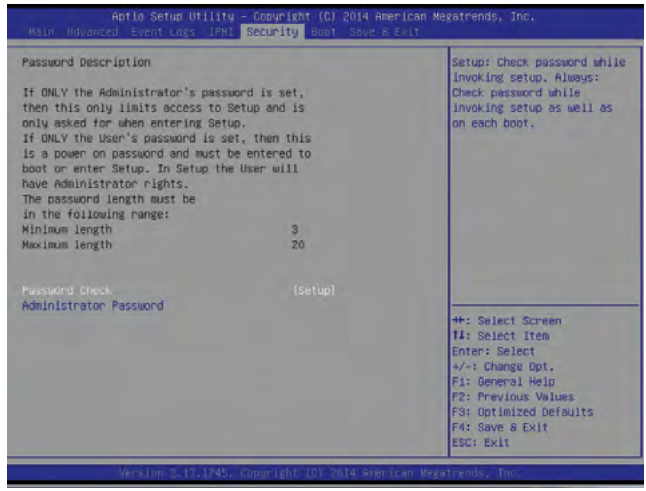

Password Check

Select Setup for the system to prompt for a password upon entering the BIOS setup utility. Select Always for the system to prompt for a password at bootup and upon entering the BIOS Setup utility. The options are **Setup** and Always.

Administrator Password

Use this feature to set the administrator password which is required before entering the BIOS setup utility. The length of the password should be from 3 characters to 20 characters long.

User Password

Use this feature to set the user password which is required to enter the BIOS setup utility. The length of the password should be from 3 characters to 20 characters long.

4-7 Boot Settings

Use this feature to configure Boot Settings:

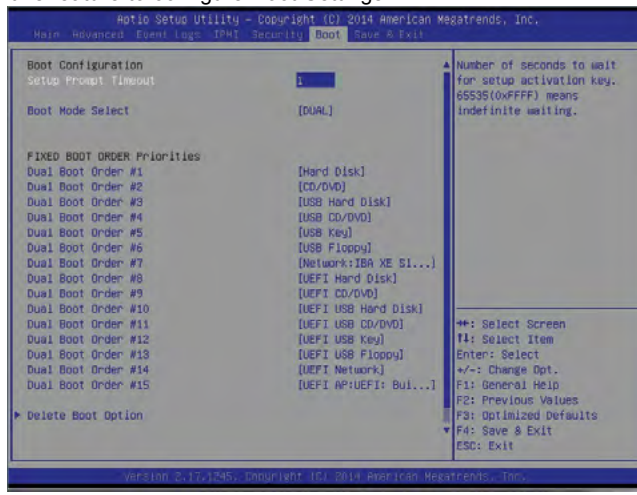

Boot Configuration

Setup Prompt Timeout

Use this item to indicate how many seconds the system shall wait for the BIOS setup activation key to respond before the system starts to boot. The default setting is **1**.

Boot Mode Select

Use this item to select the type of device to be used for system boot. The options are Legacy, UEFI, and **Dual.**

Fixed Boot Order Priorities

This option prioritizes the order of bootable devices from which the system will boot. Press <Enter> on each entry from top to bottom to select devices.

- Dual Boot Order #1
- Dual Boot Order #2
- Dual Boot Order #3
- Dual Boot Order #4
- Dual Boot Order #5
- Dual Boot Order #6

- Dual Boot Order #7
- Dual Boot Order #8
- Dual Boot Order #9
- Dual Boot Order #10
- Dual Boot Order #11
- Dual Boot Order #12
- Dual Boot Order #13
- Dual Boot Order #14
- Dual Boot Order #15

▶Delete Boot Option

Use this item to select a boot device to delete from the boot priority list.

Delete Boot Option

Select the target boot device to delete.

▶Network Drive BBS Priorities

- Legacy Boot Order #1

▶UEFI Application Boot Priorities

- UEFI Boot Order #1

4-8 Save & Exit

Select the Save & Exit tab from the BIOS setup screen to configure the settings below.

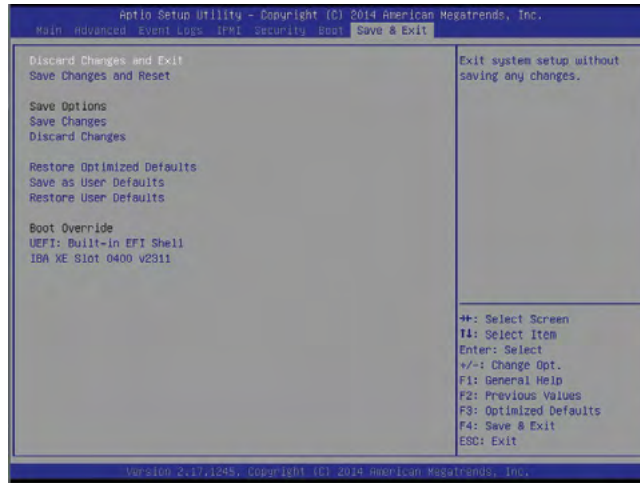

Discard Changes and Exit

Select this option to quit the BIOS setup without making any permanent changes to the system configuration, and reboot the computer. Select Discard Changes and Exit from the Exit menu and press <Enter>.

Save Changes and Reset

When you have completed the system configuration changes, select this option to leave the BIOS setup utility and reboot the computer for the new system configuration parameters to take effect. Select Save Changes and Exit from the Exit menu and press <Enter>.

Save Options

Save Changes

When you have completed the system configuration changes, select this option to save all changes made. This will not reset (reboot) the system.

Discard Changes

Select this option and press <Enter> to discard all the changes and return to the AMI BIOS Utility Program.

Restore Defaults

Select Restore Defaults from the Exit menu and press <Enter> to load manufacture default settings for your system to maximize system performance but not stability.

Save As User Defaults

Select Save as User Defaults from the Exit menu and press <Enter> to save changes to the BIOS setup for future use.

Restore User Defaults

Select Restore User Defaults from the Exit menu and press <Enter> to retrieve user-defined settings that have been previously saved.

Boot Override

This feature allows the user to override the Boot priorities sequence in the Boot menu, and immediately boot the system with another device specified by the user. This is a one-time override.

Appendix A

BIOS Error Beep Codes

During the POST (Power-On Self-Test) routines, which are performed at each system boot, errors may occur.

Non-fatal errors are those which, in most cases, allow the system to continue to boot. The error messages normally appear on the screen.

Fatal errors will not allow the system to continue with bootup procedure. If a fatal error occurs, you should consult with your system manufacturer for possible repairs.

These fatal errors are usually communicated through a series of audible beeps. The numbers on the fatal error list correspond to the number of beeps for the corresponding error.

A-1 BIOS Error Beep Codes

BIOS Error Beep Codes		
Beep Code/LED	**Error Message**	**Description**
1 beep	Refresh	Circuits have been reset. (Ready to power up)
5 short beeps + 1 long beep	Memory error	No memory detected in the system
5 long beeps + 2 short beeps	Display memory read/write error	Video adapter missing or with faulty memory
1 continuous beep	System OH	System Overheat

Notes

Appendix B

Software Installation Instructions

B-1 Installing Software Programs

After you've installed the operating system, a screen as shown below will appear. You are ready to install software programs and drivers that have not yet been installed. To install these programs, click the icons to the right of these items.

Note: To install the Windows OS, please refer to the instructions posted on our website at http://www.supermicro.com/support/manuals/.

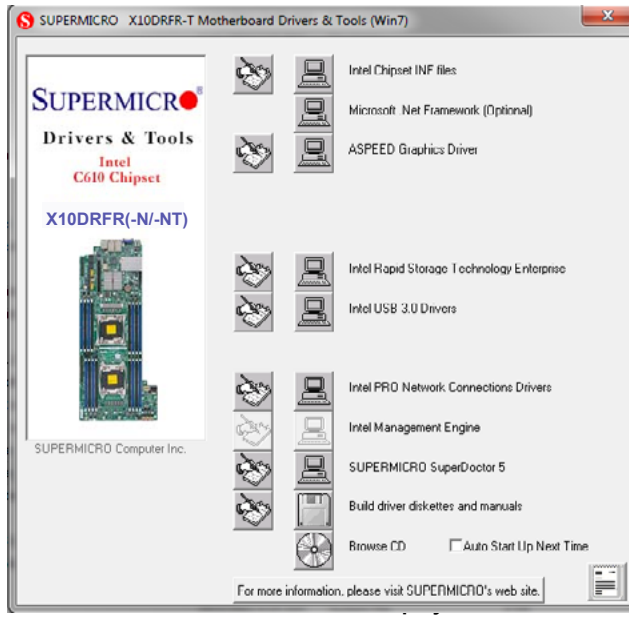

Note 1: Click the icons showing a hand writing on the paper to view the readme files for each item. Click a computer icon to the right of an item to install an item (from top to the bottom) one at a time. After installing each item, you must reboot the system before proceeding with the next item on the list. The bottom icon with a CD on it allows you to view the entire contents of the CD.

Note 2: When making a storage driver diskette by booting into a Driver CD, please set the SATA Configuration to "Compatible Mode" and configure SATA as IDE in the BIOS Setup. After making the driver diskette, be sure to change the SATA settings back to your original settings.

B-2 Configuring SuperDoctor 5

The Supermicro SuperDoctor® 5 is a hardware monitoring program that functions in a command-line or web-based interface in Windows and Linux operating systems. The program monitors system health information such as CPU temperature, system voltages, system power consumption, fan speed, and provides alerts via email or Simple Network Management Protocol (SNMP).

SuperDoctor 5 comes in local and remote management versions and can be used with Nagios to maximize your system monitoring needs. With SuperDoctor 5 Management Server (SSM Server), you can remotely control power on/off and reset chassis intrusion for multiple systems with SuperDoctor 5 or IPMI. SD5 Management Server monitors HTTP, FTP, and SMTP services to optimize the efficiency of your operation.

Note: The default User Name and Password for SuperDoctor 5 is admin / admin.

SuperDoctor 5 Interface Display Screen (Health Information)

Note: The SuperDoctor 5 program and user's manual can be downloaded from the Supermicro web site at http://www.supermicro.com/products/nfo/sms_sd5.cfm.

Appendix C

UEFI BIOS Recovery Instructions

Warning: Do not upgrade the BIOS unless your system has a BIOS-related issue. Flashing the wrong BIOS can cause irreparable damage to the system. In no event shall Supermicro be liable for direct, indirect, special, incidental, or consequential damages arising from a BIOS update. If you need to update the BIOS, do not shut down or reset the system while the BIOS is updating to avoid possible boot failure.

C-1 An Overview to the UEFI BIOS

The Unified Extensible Firmware Interface (UEFI) provides a software-based interface between the operating system and the platform firmware in the pre-boot environment. The UEFI specification supports an architecture-independent mechanism for add-on card initialization to allow the UEFI OS loader, which is stored in the add-on card, to boot the system. The UEFI offers a clean, hands-off control to a computer system at bootup.

C-2 How to Recover the UEFI BIOS Image (-the Main BIOS Block)

A UEFI BIOS flash chip consists of a recovery BIOS block and a main BIOS block (a main BIOS image). The boot block contains critical BIOS codes, including memory detection and recovery codes for the user to flash a new BIOS image if the original main BIOS image is corrupted. When the system power is on, the boot block codes execute first. Once it is completed, the main BIOS code will continue with system initialization and bootup.

Note: Follow the BIOS recovery instructions below for BIOS recovery when the main BIOS boot crashes. However, when the BIOS boot block crashes, you will need to follow the procedures below for BIOS recovery.

C-3 To Recover the Main BIOS Block Using a USB-Attached Device

This feature allows the user to recover a BIOS image using a USB-attached device without additional utilities used. A USB flash device such as a USB Flash Drive, or a USB CD/DVD ROM/RW device can be used for this purpose. However, a USB Hard Disk drive cannot be used for BIOS recovery at this time.

The file system supported by UEFI is FAT (including FAT12, FAT16, and FAT32) installed on a bootable or non-bootable USB-attached device. However, the BIOS might need several minutes to locate the SUPER.ROM file if the media size becomes too large because it contains too many folders and files.

To perform UEFI BIOS recovery using a USB-attached device, follow the instructions below.

1. Using a different machine, copy the "Super.ROM" binary image file into the disc Root "\" Directory of a USB device or a writeable CD/DVD.

   Note: If you cannot locate the "Super.ROM" file in your driver disk, visit our website at www.supermicro.com to download the BIOS image into a USB flash device and rename it "Super.ROM" for BIOS recovery use.

2. Insert the USB device that contains the new BIOS image ("Super.ROM") into your USB drive and power on the system

3. While powering on the system, please keep pressing <Ctrl> and <Home> simultaneously on your keyboard *until the following screen (or a screen similar to the one below) displays*.

Warning!! Please **stop** pressing the <Ctrl> and <Home> keys immediately when you see the screen (or a similar screen) below; otherwise, it will trigger a system reboot.

Note: On the other hand, if the following screen displays, please load the "Super.ROM" file to the root folder and connect this folder to the system. (You can do so by inserting a USB device that contains the new "Super.ROM" image to your machine for BIOS recovery.)

4. After locating the new BIOS binary image, the system will enter the BIOS Recovery menu as shown below.

Note: At this point, you may decide if you want to start with BIOS recovery. If you decide to proceed with BIOS recovery, follow the procedures below.

5. When the screen as shown above displays, using the arrow key, select the item "Proceed with flash update" and press the <Enter> key. You will see the progress of BIOS recovery as shown in the screen below.

Note: *Do not interrupt* the process of BIOS flashing until it is completed.

6. After the process of BIOS recovery is completed, press any key to reboot the system.

7. Using a different system, extract the BIOS package into a bootable USB flash drive.

8. When a DOS prompt appears, enter FLASH.BAT BIOSname.### at the prompt.

Note: *Do not interrupt this process* until BIOS flashing is completed.

9. After seeing the message that BIOS update is completed, unplug the AC power cable from the power supply to clear the CMOS, and then plug the AC power cable in the power supply again to power on the system.

10. Press <Del> continuously to enter the BIOS Setup utility.

11. Press <F3> to load default settings.

12. After loading default settings, press <F4> to save the settings and exit the BIOS Setup utility.

(Disclaimer Continued)

The products sold by Supermicro are not intended for and will not be used in life support systems, medical equipment, nuclear facilities or systems, aircraft, aircraft devices, aircraft/emergency communication devices or other critical systems whose failure to perform be reasonably expected to result in significant injury or loss of life or catastrophic property damage. Accordingly, Supermicro disclaims any and all liability, and should buyer use or sell such products for use in such ultra-hazardous applications, it does so entirely at its own risk. Furthermore, buyer agrees to fully indemnify, defend and hold Supermicro harmless for and against any and all claims, demands, actions, litigation, and proceedings of any kind arising out of or related to such ultra-hazardous use or sale.