SIEMENS

Data sheet 5TD2123

DELTA pushbutton device insert, UP 1 change-over contact can be used as NC contact 10A 250V



Model	
Product brand name	DELTA
Product designation	Pushbutton insert
Design of the product	single pushbutton
Design of the switching function	1 changeover contact
Type of composition	basic element
Design of the operating mechanism	pushbutton/momentary pushbutton
General technical data	
Printed marking	Without
Mounting type	fixing with claw and screw
Surface processing	others
Material	others
Supply voltage	
Operating voltage / Rated value	250 V
Protection class	
Protection class IP	IP20
Switching capacity	

Subject to change without notice
© Copyright Siemens

Switching capacity current	10 A

Main circuit

Operating current / rated value	10 A

Appearance

Appearance	not applicable
Color	miscellaneous

Product details

Product component	
• Labeling field	No
• Integrated / Light source	No
• Signaling contact	No
Product feature	
• halogen-free	Yes
• transparent	No

Number

Number of actuating rockers	1

Mechanical Design

Height	70 mm
Width	70 mm
Depth	32 mm
Mounting type	flush mounted
Material / of the enclosure	metal

Certificates

General Product Approval		Declaration of Conformity	Test Certificates	
ÖVE	VDE	EG-Konf.	Type Test Certific-ates/Test Report	Miscellaneous

Further information

Information- and Downloadcenter (Catalogs, Brochures,…)
http://www.siemens.com/lowvoltage/catalogs

Industry Mall (Online ordering system)
https://mall.industry.siemens.com/mall/en/en/Catalog/product?mlfb=5TD2123

Service&Support (Manuals, Certificates, Characteristics, FAQs,...)
https://support.industry.siemens.com/cs/ww/en/ps/5TD2123

Image database (product images, 2D dimension drawings, 3D models, device circuit diagrams, ...)
http://www.automation.siemens.com/bilddb/cax_en.aspx?mlfb=5TD2123

CAx-Online-Generator
http://www.siemens.com/cax

Tender specifications
http://www.siemens.com/specifications

Subject to change without notice
© Copyright Siemens

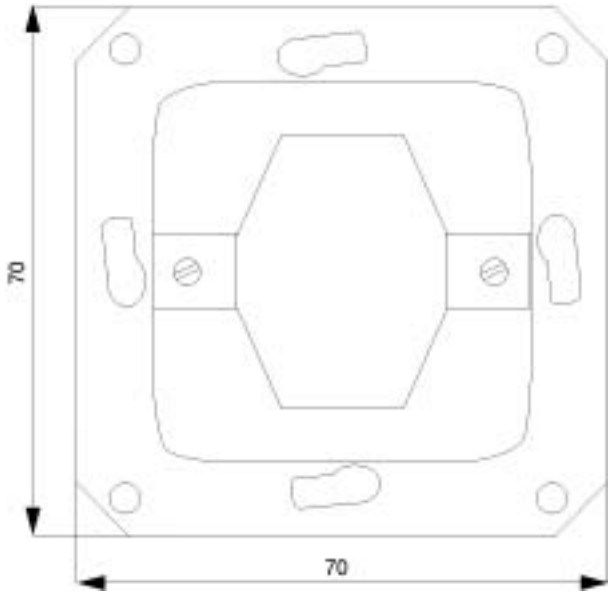

Subject to change without notice
© Copyright Siemens