SIEMENS

Dishwasher

SR...

siemens-home.bsh-group.com/welcome

en Instruction manual

Register your product online

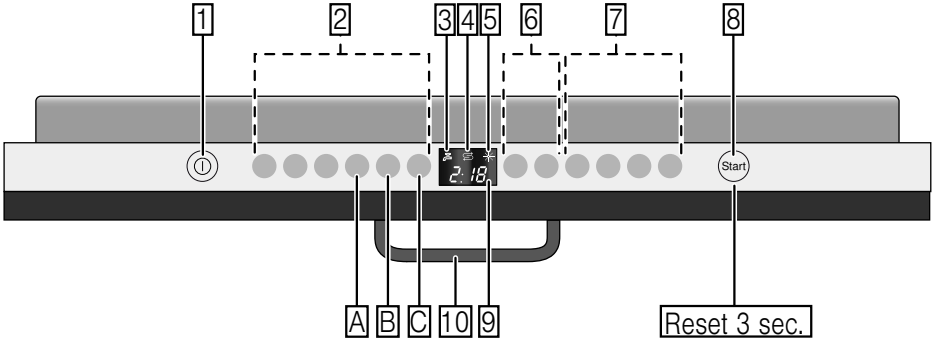
1
2
3
4
5
6
7
8
Start
A
B
C
10
9
Reset 3 sec.

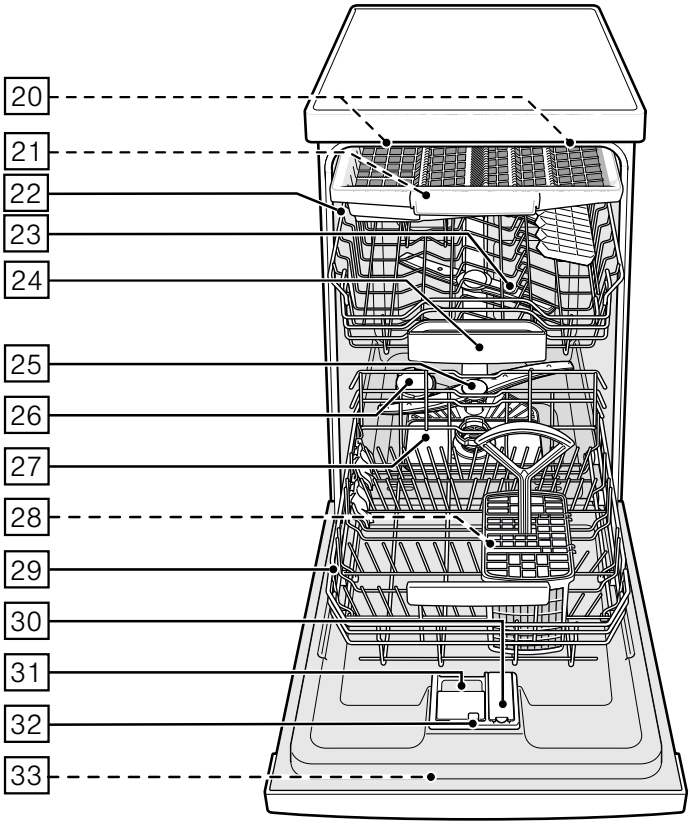
20
21
22
23
24
25
26
27
28
29
30
31
32
33

Table of contents

Intended use 4

Safety instructions. 4

Before you switch ON the appliance 5
Delivery. 5
Installation. 5
In daily use 6
Damage 7
Disposal 7
Door lock 8

Environmental protection 10

Packaging. 10
Old appliances 10

Getting to know your appliance 11

Control panel 11
Appliance interior 11
Overview of menu. 12
Eco drying 13

Water softening system / special salt 13

Water hardness table 13
Adjusting the water softening system 14
Using special salt 14
Detergent with a salt component . . . 14
Switching off water softening unit . . . 14

Rinse aid 15

Setting amount of rinse aid. 15
Detergent with a rinse aid component 16
Switching off rinse aid refill indicator 16

Utensils. 16

Not suitable 16
Glass and utensil damage. 16
Loading the dishwasher 17
Upper basket. 17
Lower basket. 17
Cutlery basket 18
Cutlery drawer 18
Etagere 19
Folding spikes 20
Small items holder. 20
Knife rack 20
Baking sheet spray head. 21
Unloading the dishwasher 21
Adjusting the height of the basket 22

Detergent 23

Adding detergent. 23
Combination detergent 24

Overview of programmes 25

Programme selection 26
Information for test institutes 26

Additional functions 27

Save time (VarioSpeedPlus) 27
Half load 27
hygienePlus (HygienePlus) 27
intensiveZone 27
extraDry. 27
Shine and Dry 27
Energy Save 27

Operating the appliance 28
Programme data 28
AquaSensor 28
Eco drying 28
Switching on the appliance 29
timeLight 29
infoLight 30
Remaining running time display. 30
Time preselection 30
Programme end. 31
Auto Power Off 31
Switching off the appliance 32
Interrupting the programme 32
Terminating the programme 33
Changing the programme 33
ExtraDry 33

Cleaning and maintenance . . . 34
Overall status of the dishwasher 34
Machine Care 35
Special salt and rinse aid 35
Filters. 36
Spray arms 36

Fault, what to do? 37
Waste water pump. 38
Fault table 39

Customer service 48

Installation and connection . . . 48
Contents of package 48
Safety instructions 48
Delivery 49
Technical specifications. 49
Installation 49
Drainage connection 49
Drinking water connection 50
Hot water connection. 50
Electrical connection 51
Removal 51
Transporting. 51
Protection against frost
(Emptying the appliance). 51

Intended use

- This appliance is intended for use in the home and domestic environments.
- Use the dishwasher only in the home and only for its designated purpose: for washing domestic dishes.
- This appliance is intended for use up to a maximum altitude of 4000 metres above sea level.

Safety instructions

This appliance may be used by children over the age of 8 years old and by persons with reduced physical, sensory or mental capabilities or by persons with a lack of experience or knowledge if they are supervised or are instructed by a person responsible for their safety how to use the appliance safely and have understood the associated hazards.

Children must not play with, on, or around the appliance. Children must not clean the appliance or carry out general maintenance unless they are at least 8 years old and are being supervised.

Keep children below the age of 8 years old at a safe distance from the appliance and power cable.

Before you switch ON the appliance

Please read the instructions for use and installation carefully. They contain important information on how to install, use and maintain the appliance.

Retain all documents for later use or for the subsequent owner.

You can download the instructions for use from our website free of charge. The relevant Internet address can be found overleaf on these instructions for use.

Delivery

1. Check the packaging and dishwasher immediately for damage caused in transit. Do not switch on a damaged appliance, but contact your supplier.
2. Please dispose of the packaging material in an environmentally friendly manner.
3. Do not let children play with packaging and its parts. There is a risk of suffocation from collapsible boxes and film.

Installation

- Following installation, ensure that the back of the dishwasher is not freely accessible (protection against contact due to hot surface).
- Install and connect the appliance according to the installation and assembly instructions.
- Prior to installation, disconnect the dishwasher from the power supply.
- Ensure that the protective conductor system of the domestic supply has been correctly installed.
- The electrical connection conditions must correspond with the specifications on the dishwasher rating plate [33].
- If the power cord of this appliance is damaged, it must be replaced with a particular power cord. To prevent injury, the power cord may be purchased from customer service only.
- If the dishwasher is installed in a high-sided unit, the unit must be secured properly.
- If the dishwasher is installed below or above other domestic appliances, follow the information for installation in combination with a dishwasher in the installation instructions for the particular appliances.

- Also follow the installation instructions for the dishwasher to ensure that all appliances are operated safely.
- If there is no information or if the installation instructions do not include the appropriate information, contact the manufacturer of these appliances to ensure that the dishwasher can be installed above or below these appliances.
- If you cannot obtain any information from the manufacturer, you must not install the dishwasher above or below these appliances.
- If you install a microwave oven above the dishwasher, the microwave oven may be damaged.
- Install built-under or integratable appliances only under continuous worktops which have been screwed to adjacent cupboards to ensure stability.
- Do not install the appliance near heat sources (radiators, heat storage tanks, cookers or other appliances which generate heat) and do not install under a hob.
- Please note that the insulation material of the dishwasher power cord may melt next to heat sources (e.g. heating / hot water installations) or hot appliance parts. Make sure that the power cord of the dishwasher never comes into contact with heat sources or hot appliance parts.
- After installing the appliance, ensure that the plug is easily accessible. → *"Electrical connection" on page 51*
- For some models:
  The plastic housing on the water connection contains an electric valve. The supply hose contains electrical connection cables. Do not cut through the supply hose. Do not immerse the plastic housing in water.

In daily use

Read and observe the safety information and instructions for use on the packaging for cleaning and rinsing agents.

Damage

- The appliance may be repaired and opened up by a technician only. To do this, disconnect the appliance from the power supply. Pull out the mains plug or switch off the fuse. Turn off the tap.
- If the appliance is damaged, especially the control panel (cracks, holes, broken buttons), or the door function is impaired, stop operating the appliance. Pull out the mains plug or switch off the fuse. Turn off tap, call customer service.

Disposal

1. Make redundant appliances unusable to prevent subsequent accidents.
2. Dispose of the appliance in an environmentally friendly manner.

⚠ Warning
Risk of injury!

- To prevent injuries, e.g. caused by stumbling, open the dishwasher only briefly in order to load and unload the dishwasher.
- Knives and other utensils with sharp points must be placed with the points downwards in the cutlery basket* 28 or horizontally on the knife shelf* or in the cutlery drawer* 21.
- Do not lean or sit on the open door.
- In the case of free-standing appliances, ensure that the baskets are not overloaded. The appliance could tip.
- If the appliance is not in a cavity and a side panel is accessible, the door hinge area must be covered at the side for reasons of safety (risk of injury). The covers are available as optional accessories from customer service or specialist outlets.

* depending on the features of your dishwasher

⚠ Warning
Risk of explosion!
Do not add any solvents to the rinsing compartment. Danger of explosion!

⚠ Warning
Risk of scalding!
Open the door carefully when the programme is still running. There is a risk of hot water spraying out of the appliance.

⚠ Warning
Risk to children!
- If fitted, use the childproof lock.
- Do not allow children to play with or operate the appliance.
- Keep children away from detergents and rinse aid. These may cause chemical burns in the mouth, throat and eyes or asphyxiation.
- Keep children away from open dishwasher. There may be small parts in the dishwasher which children could swallow and the water inside the dishwasher is not drinking water as it may contain detergent residue.
- Ensure that children do not place fingers in the tablet collecting tray [24]. Small fingers could become caught in the slots.
- When opening and closing the door on an eye-level appliance, ensure that children do not become jammed or crushed between the appliance door and the cupboard door below.
- Children could become locked in the appliance (danger of suffocation) or get into another dangerous situation.
  Redundant appliances: Pull out the mains plug, sever and dispose of the power cord. Destroy the door lock so that the door can no longer be closed.

Childproof lock (door lock) *
The child-proof lock (door lock) protects children from potential hazards which the dishwasher poses.

⚠ Warning
Risk of suffocation!
Children may become locked in the dishwasher and suffocate. Always completely close the appliance door when leaving the dishwasher.

Activate the child-proof lock (door lock) as follows:

1. Pull the catch of the child-proof lock towards yourself (1).
2. Close the door (2).

The child-proof lock is activated.

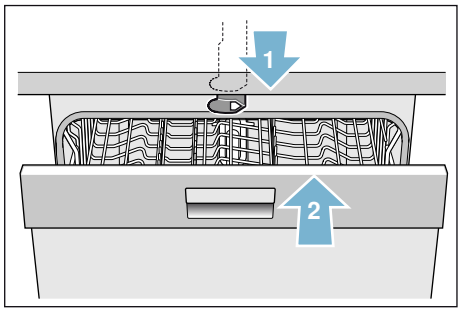

Open the door with activated child-proof lock (door lock) as follows:

1. Press the catch of the child-proof lock to the right (1).
2. Open the door (2).

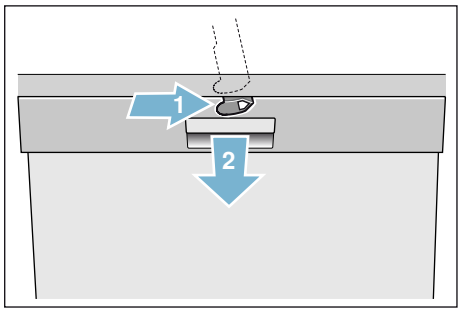

Deactivate the child-proof lock (door lock) as follows:

1. Press the catch of the child-proof lock to the right (1).
2. Press the catch of the child-proof lock backwards (2).

The childproof lock is deactivated.

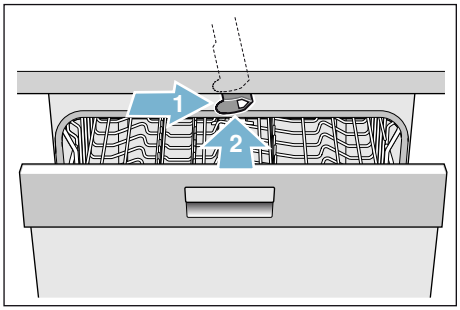

* depending on the features of your dishwasher

Environmental protection

Both the packaging of new appliances and the old appliances themselves contain valuable raw materials and recyclable materials.

Please dispose of the individual parts separated according to type.

Please ask your dealer or inquire at your local authority about current means of disposal.

Packaging

All plastic parts of the appliance are identified with internationally standardised abbreviations (e.g. PS polystyrene). Therefore, plastic waste can be sorted out when the appliance is being disposed of.

Please follow the safety instructions under “Delivery” → *Page 5*.

Old appliances

Please follow the safety instructions under “Disposal of your appliance” → *Page 7*.

This appliance has been identified in accordance with the European Directive 2012/19/EU on Waste Electrical and Electronic Equipment (WEEE). The directive provides a framework for the collection and recycling of old appliances, which is valid across the EU.

Getting to know your appliance

Diagrams of the control panel and the interior of the appliance can be found at the front of the manual. Individual positions are referred to in the text.

Control panel

See Fig. ⟶ *Page 2*

1 On/off switch
2 Programme buttons **
3 Display "Check water supply"
4 Salt refill indicator
5 Rinse aid refill indicator
6 Time preselection
7 Additional functions/programme buttons **
8 START button
9 Display window
10 Door opener

* depending on the features of your dishwasher

** number depending on the features of your dishwasher

Appliance interior

See Fig. ⟶ *Page 2*

20 Interior light *
21 Cutlery drawer *
22 Top basket
23 Upper spray arms
24 Tablet collecting tray
25 Lower spray arm
26 Dispenser for special salt
27 Filters
28 Cutlery basket *
29 Bottom basket
30 Dispenser for rinse aid
31 Detergent dispenser
32 Lock for detergent dispenser
33 Rating plate

* depending on the features of your dishwasher

Overview of menu

The dishwasher has been preset with certain settings for your convenience. The settings can be found in the individual chapters. You can change these factory settings.

Setting up	Factory setting	Description
H Water hardness H:00 - H:07	H:04	Setting water hardness. When using Multitabs, select the lowest setting.
r Rinse aid r:00 - r:06	r:04	Amount of rinse aid affects drying. When using Multitabs, select setting 0.
d ExtraDry d:00 - d:01	d:00 / Off	Improved drying for glasses and plastic tableware.
A Hot water * A:00 - A:01	A:00 / Off	The dishwasher can be connected to either hot (40-60°C) or cold water (<40°C).
P Auto Power Off P:00 - P:02	P:01	Appliance automatically switches off at the end of each wash.
b Tone volume * b:00 - b:03	b:02	Volume of signal at end of programme.
S Timelight * S:00 - S:02	S:01	While a programme is running, status information is projected onto the floor.
I infoLight * I:00 - I:01	I:01 / On	Light is projected to signal an active cleaning cycle.
o Eco drying * o:00 - o:01	o:01 / On	At the end of the Eco programme the door opens automatically.

* depending on the configuration of your specific dishwasher

Eco drying

Your dishwasher features the Eco drying function. If you have selected the Eco 50° programme, the door opens automatically when the programme ends. You can switch Eco drying on or off → *"Operating the appliance" on page 28*.

Water softening system / special salt

To ensure good rinsing results, the dishwasher requires soft water, i.e. water which is low in lime, otherwise limescale will be deposited on the utensils and interior container. Tap water above 7° dH (1.2 mmol/l) must be softened. The water is softened with special salt (regeneration salt) in the water softening system of the dishwasher. The setting and therefore the required amount of salt depends on the degree of hardness of your tap water (see following water hardness table).

Water hardness table

Water hardness value °Clarke	Hardness range	mmol/l	Set value on the machine
0–8	soft	0–1.1	H:00
9–10	soft	1.2–1.4	H:01
11–12	medium	1.5–1.8	H:02
13–15	medium	1.9–2.1	H:03
16–20	medium	2.2–2.9	H:04
21–26	hard	3.0–3.7	H:05
27–38	hard	3.8–5.4	H:06
39–62	hard	5.5–8.9	H:07

Adjusting the water softening system

You can set the amount of salt that should be added to a value between H:00 and H:07. No salt is needed with the setting H:00.

Here's how to set up the amount of added salt:

1. Ask your local water utility company for the water hardness value of the tap water.
2. Required setting can be found in the water hardness table.
3. Switch on ON/OFF switch [1].
4. Hold down the programme button [A] and then repeatedly press the START button [8] until H:0... appears in the display window.
5. Release both buttons.
   The LED of the [A] button flashes and the digital display [9] shows the factory setting H:04.
6. Press the programme button [C]. Each time the button is pressed, the set value increases by one level; when it reaches the value H:07 the display jumps back to H:00 (Off).
7. Press START button [8].

The chosen setting has now been stored in your dishwasher.

Using special salt

Top up the special salt as soon as the salt refill indicator [4] lights up in the control panel. Always top up the special salt immediately before switching on the dishwasher. This ensures that overrun special salt solution is immediately rinsed out and that corrosion in the washing tank cannot occur.

Caution!
Detergent will destroy the water softening unit! Never pour detergent into the dispenser for special salt.

Top up the special salt as follows:

1. Undo the screw plug on the dispenser [26].
2. Fill the dispenser with water (required only when switching on the appliance for the first time).
3. Add special salt as illustrated **(do not use table salt or tablets)**. The water is displaced and runs out.

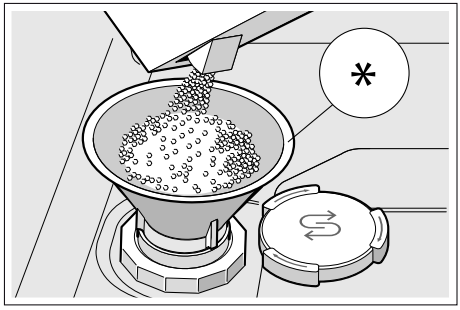

*Depending on the features of your dishwasher

Using detergent with a salt component

In general, you can use detergent with a salt component up to a water hardness level of 21 °dH (37 °fH, 26 °Clark, 3.7 mmol/L) without adding special salt. Above a water hardness value of 21 °dH, use additional special salt.

Switching off salt refill indicator/water softening unit

If the salt refill indicator [4] bothers you (e.g. if you are using a combination detergent with a salt component), you can switch off the salt refill indicator.

Proceed as described under "Setting water softening unit" and set the value to H:00. The water softening unit and the salt refill indicator are switched off.

Rinse aid

The rinse aid ensures stain-free dishes and clear glasses. Use only rinse aid for domestic dishwashers. As soon as the rinse aid refill indicator [5] lights up in the control panel, there is still a rinse aid reserve of 1-2 rinse cycles. Top up the rinse aid.

Top up the rinse aid as follows:

1. Open dispenser [30]; press lug on the lid (1) and lift (2).

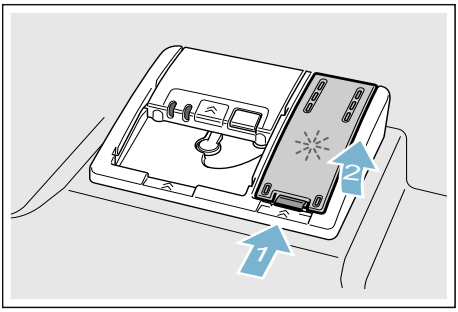

2. Add rinse aid up to the max. mark.

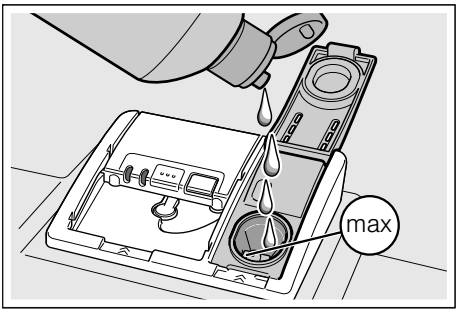

3. Close the lid.
   The lid "clicks" into position.
4. Remove overflowed rinse aid with a cloth.
   This prevents excessive frothing during the next rinse cycle.

Setting amount of rinse aid

You can set the amount of rinse aid that should be added to a value between r:00 and r:06. Setting the amount of rinse aid to be dispensed to r:04 will give you a very good drying result. The factory setting is r:04. Do not change the amount of rinse aid unless there are streaks or water stains on the utensils. Set a lower level to avoid streaks. Set a higher level to avoid water stains.

Here's how to set the amount of rinse aid:

1. Switch on ON/OFF switch [1].
2. Hold down the programme button [A] and then repeatedly press the START button [8] until H:0... appears in the display window.
3. Release both buttons.
   The LED of the [A] button flashes and the digital display [9] shows the factory setting H:04.
4. Press the programme button [A] repeatedly until the factory setting value r:04 appears in the display window [9].
5. Press the programme button [C]. Each time the button is pressed, the set value increases by one level; when it reaches the value r:06 the display jumps back to r:00 (Off).
6. Press START button [8].

The set value is saved.

Using detergent with a rinse aid component

In general, you can use detergent with a rinse aid component up to a water hardness level of 21 °dH (37 °fH, 26 °Clark, 3.7 mmol/L) without adding rinse aid. Above a water hardness value of 21 °dH, use additional rinse aid.

Switching off rinse aid refill indicator

If the rinse aid refill indicator 5 bothers you (e.g. if you are using a combination detergent with a rinse aid component), you can switch off the rinse aid refill indicator.

Proceed as described under "Setting rinse aid quantity" and set the level to r:00. The rinse aid refill indicator 5 is switched off.

Utensils

Not suitable

- Cutlery and utensils made of wood.
- Delicate decorative glasses, craft and antique utensils. These decors are not dishwasher-proof.
- Plastic parts not resistant to heat.
- Copper and tin utensils.
- Utensils which are soiled with ash, wax, lubricating grease or ink.

Aluminium and silver parts have a tendency to discolour and fade during the wash cycle. Even some types of glass (e.g. crystal glass objects) may turn cloudy after many wash cycles.

Glass and utensil damage

Causes:

- Glass type and glass production process.
- Chemical composition of the detergent.
- Water temperature of the wash programme.

Recommendation:

- Use only glasses and porcelain which the manufacturer designates as dishwasher-proof.
- Use a detergent which protects utensils.
- Take glass and cutlery out of the dishwasher as soon as possible after the programme ends.

Loading the dishwasher

1. Remove large food remnants. It is not necessary to prerinse utensils under running water.
2. Place the utensils so that
   - they are secure and cannot tip over.
   - all utensils with their openings face down.
   - parts with curves or indentations are at an angle, thereby allowing water to drain.
   - does not obstruct rotation of the two spray arms [23] and [25].

Very small utensils should not be washed in the machine, as they may fall out of the baskets.

Upper basket

Arrange cups and glasses in the upper basket [22].

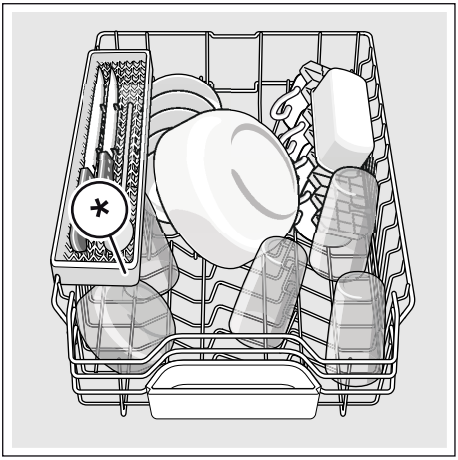

* depending on the features of your dishwasher

Note: Utensils must not be placed above the tablet collecting tray [24]. These may block the lid of the detergent dispenser and prevent it from opening fully.

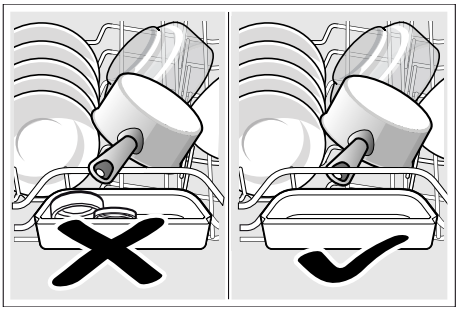

Lower basket

Arrange pots and plates in the lower basket [29].

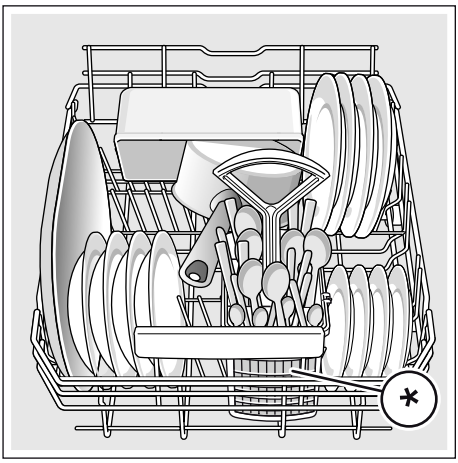

* depending on the features of your dishwasher

Tip: Heavily soiled utensils (pans) should be placed in the lower basket. The more powerful spray jet provides a better dishwashing result.

Tip: Other examples, such as the best way of loading your dishwasher, can be found on our homepage. These can be downloaded free of charge. The corresponding Internet address can be found on the back page of these instructions for use.

Cutlery basket *

Place cutlery, always unsorted with the tips face down, in the cutlery basket *.

To prevent injuries, place long, pointed implements and knives on the knife shelf *.

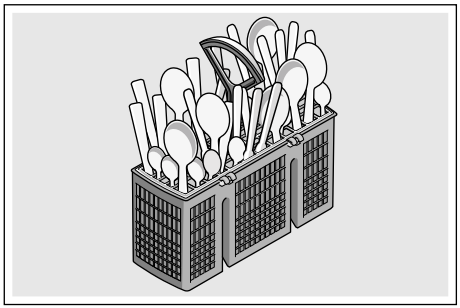

* depending on the features of your dishwasher

Cutlery drawer *

Arrange the cutlery in the cutlery drawer [21] as illustrated. Separately arranged utensils are easier to remove after washing.

You can take out the cutlery drawer.

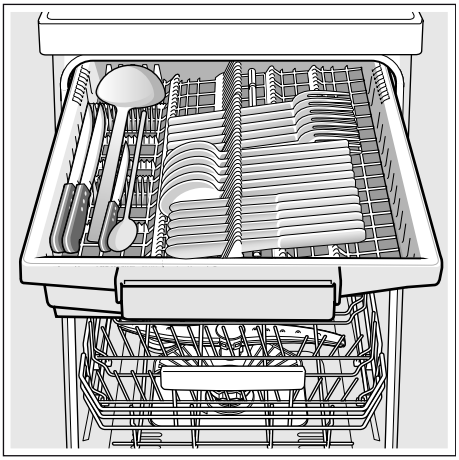

Depending on the features of your dishwasher, you can fold down the side shelves to provide more room for taller items of cutlery. The front rows of prongs can be folded down to provide room for wider handles.

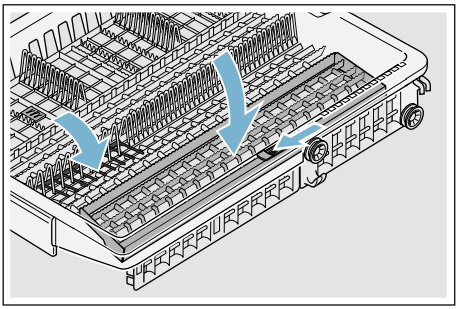

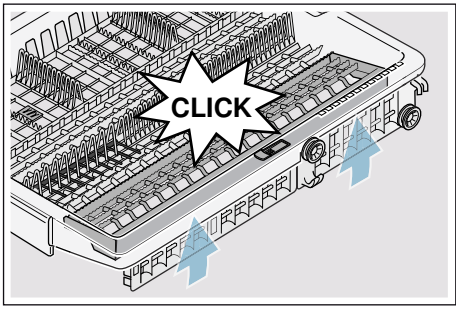

* depending on the features of your dishwasher

Etagere *

The etagere and the space underneath can be used for small cups and glasses or for larger items of cutlery, such as wooden spoons or serving cutlery. If you do not require the etagere, it can be folded up.

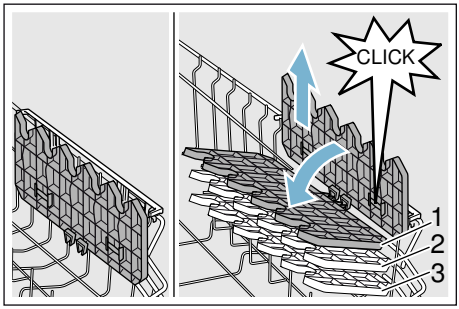

* Depending on the features of your dishwasher, you can adjust the etagere 3 times the height.

Adjust the height of the etagere as follows:

1. Position the etagere vertically and pull upwards.
2. Push etagere at a slight angle downwards to the required height (1, 2, or 3).
3. Engage etagere.
   Etagere “clicks” into position.

Folding spikes *

* Depending on the features of your dishwasher, the spikes can be folded down. This facilitates arrangement of pots, bowls and glasses.

Fold down the spikes as follows:

1. Press lever forwards (1).
2. Fold down spikes (2).

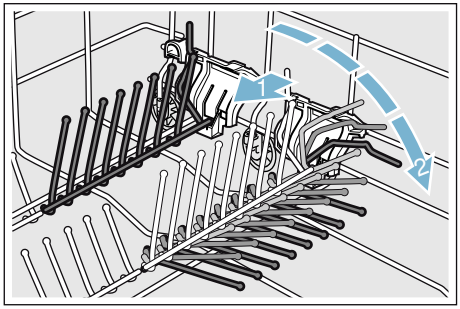

Small items holder *

* Depending on the features of your dishwasher, the upper basket is fitted with small items holders. The small items holders can be used to securely attach light plastic parts.

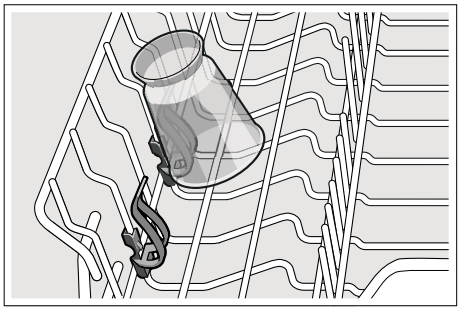

Knife rack *

* Depending on the features of your dishwasher, the upper basket is fitted with a knife shelf. Long knives and other utensils can be placed in the knife shelf.

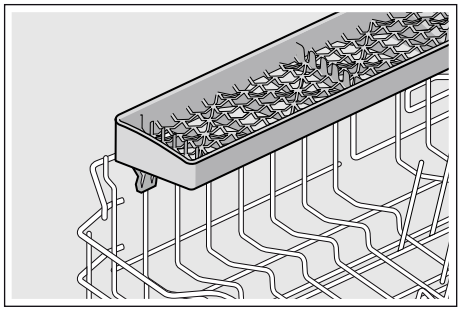

Baking sheet spray head *

* depending on the features of your dishwasher

Large trays or grilles as well as large plates (gourmet plates, pasta plates, dinner plates) can be cleaned with this spray head.

Insert the spray head as follows:

1. Remove upper basket [22].
2. Insert spray head as illustrated and turn to the right.
   Spray head is engaged.

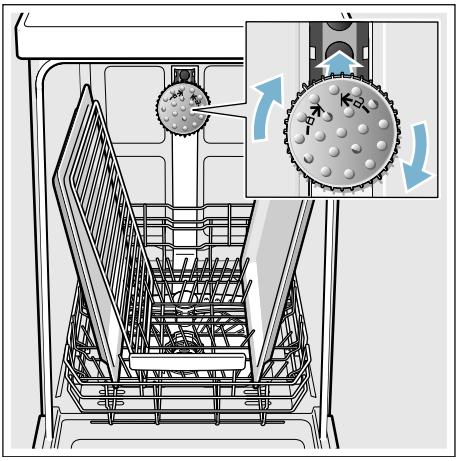

To ensure that the spray jet can reach all parts, arrange the baking sheets as illustrated (max. 2 baking sheets and 2 grilles).

Note: Ensure that the dishwasher is always operated with upper basket [22] or baking tray spray head.

Unloading the dishwasher

To prevent water from dripping off the upper basket onto the utensils in the lower basket, it is recommended to empty the appliance from the bottom up.

Tip: Hot utensils are sensitive to shock! Therefore, when the programme ends, leave the utensils to cool down in the dishwasher until they can be handled.

Note: When the programme ends, water droplets can still be seen inside the appliance. This does not affect the drying of the utensils.

Adjusting the height of the basket *

* depending on the features of your dishwasher

If required, the height of the upper basket [22] can be adjusted to create more space for taller utensils either in the upper or lower basket.

Appliance height 81.5 cm

With cutlery basket	Upper basket	Lower basket
Setting 1 max. ø	22 cm	31 cm
Setting 2 max. ø	24.5 cm	27.5 cm
Setting 3 max. ø	27 cm	25 cm

With cutlery drawer	Upper basket	Lower basket
Setting 1 max. ø	16 cm	31 cm
Setting 2 max. ø	18.5 cm	27.5 cm
Setting 3 max. ø	21 cm	25 cm

Arrange large plates up to a diameter of 31 cm in the lower basket [29] as illustrated.

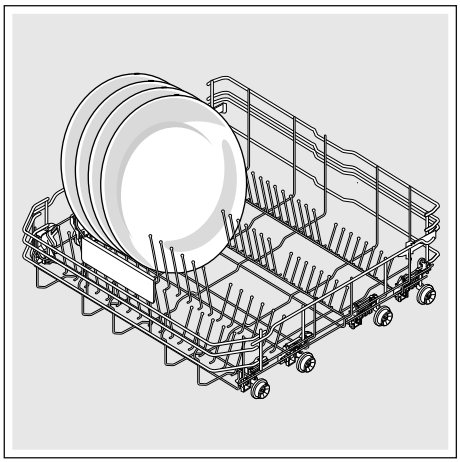

Upper basket with side levers

1. Pull out upper basket [22].
2. Hold the sides of the basket along the upper edge.
   This prevents it from suddenly dropping.
3. To **lower** the upper basket; press in both levers on the left and right on the outside of the basket. The upper basket lowers.

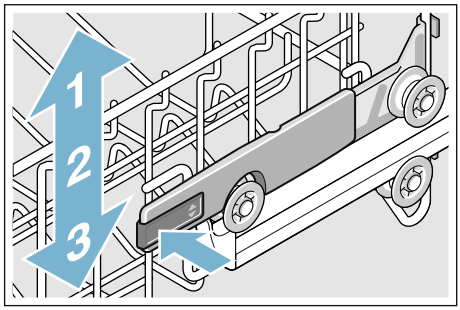

4. To **lift** the upper basket; grip the sides of the upper basket along the upper edge and lift.
5. Ensure that both sides of the upper basket are at the same height.
6. Push in upper basket.

Upper basket with upper and lower pairs of rollers

1. Pull out upper basket [22].
2. Remove upper basket.
3. Re-attach upper basket to the upper (Setting 3) or lower (Setting 1) rollers.

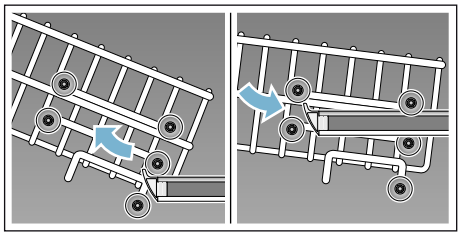

4. Push in upper basket.

Detergent

You can use tablets as well as powder or liquid detergents for dishwashers, but never use washing-up liquid. The dosage can be individually adjusted with powder or a liquid detergent according to the degree of soiling. Tablets contain an adequately large amount of active ingredients for all cleaning tasks. Modern, powerful detergents predominantly use a low-alkaline formulation with enzymes. Enzymes break down starch and remove protein. To remove coloured stains (e.g. tea, ketchup), oxygen-based bleaching agents are generally used.

Note: To ensure a good washing result, always follow the instructions on the detergent packaging!
If you have further questions, we recommend that you contact the detergent manufacturers' helplines.

Warning
Risk of injury and damage due to non-observance of the safety instructions for detergent and rinse-aid products!
Always follow the safety instructions for detergent products and rinse-aid products.

Adding detergent

1. If the detergent dispenser [31] is still closed, actuate locking bar [32] to open it.
2. Pour detergent into the dry detergent dispenser [31] only (insert tablet flat, not on its edge).
3. Dosage: see manufacturer's instructions on the packaging. Use graduated detergent dispenser. Usually 20 ml–25 ml are adequate for normal soiling. If using tablets, one tablet is adequate.

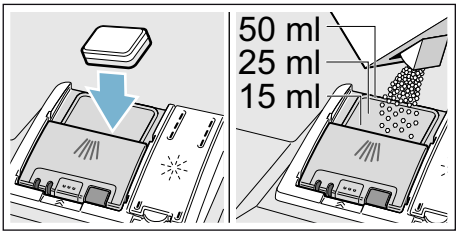

4. Close cover on the detergent dispenser.
   Cover "clicks" into position.

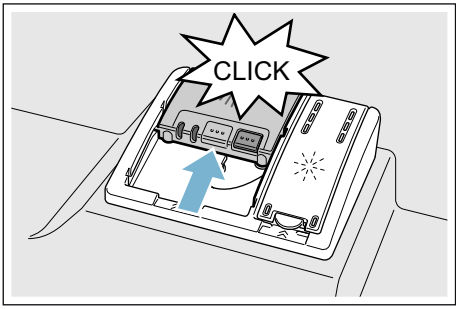

The detergent dispenser opens automatically at the optimum time depending on the programme. The powder or liquid detergent is distributed in the appliance and is dissolved, the tablet falls into the tablet collecting tray where it dissolves in doses.

Tip: If the utensils are only lightly soiled, slightly less than the indicated amount of detergent is usually adequate.
Suitable detergents and care products can be purchased online via our website or via customer service (see back page).

Combination detergent

Apart from conventional detergents (Solo), a number of products are offered with additional functions. These products contain not only the detergent but also rinse-aid and salt replacement substances (3in1) and, depending on the combination (4in1, 5in1, ...), additional components such as glass protection or stainless steel cleaner. Combination detergents function only up to a specific degree of hardness (usually 21°dH). Over this limit salt and rinse-aid must be added.

As soon as combined detergents are used, the rinse programme is adjusted automatically to ensure the best possible rinsing and drying result.

Notes

- If you want to add more utensils after the programme has started, do **not** use the tablet collecting tray [24] as a handle for the upper basket. The tablet could already be there and you will touch the partially dissolved tablet.
- Do **not** place small parts for washing in the tablet collecting tray [24]; this prevents the tablet from dissolving evenly.
- You will obtain optimum rinsing and drying results by using solo detergents and applying salt and rinse aid separately.
- If programmes are short, tablets may not have full cleaning effect due to different dissolving properties and there may even be undissolved detergent residue. It is recommended to use washing powder for these programmes.
- The dosing of a tablet is adequate for the “Intensive” programme (for some models). When using washing powder, you can apply some of this cleaning agent to the inside of the appliance’s door.
- Even if the rinse-aid and/or salt refill indicator is lit, the rinse programme will run correctly with combined detergents.
- If using detergents in a water-soluble protective cover: Take hold of the cover with dry hands only and put the detergent into an absolutely dry detergent dispenser only, otherwise the detergent may stick.
- If you switch from combined detergents to solo detergents, ensure that the water softening system and amount of rinse aid have been set to the correct value.
- Biological/eco detergents: Detergent products identified as “Bio” or “Eco” (to protect the environment) usually use lower quantities of active agents or completely dispense with certain substances. The cleaning effect of such products may occasionally be restricted.

Overview of programmes

The max. possible number of programmes is illustrated in this overview. The corresponding programmes and their arrangement can be found on the fascia.

Type of dish	Type of soiling	Programme	Possible additional options	Programme sequence
pots and pans, non-sensitive utensils and cutlery	very stubborn burned or dried-on food remains containing starch or protein	Intensive 70°	All	**Intensive:** Pre Rinse Cleaning 70° Intermediate rinse Final rinse 69° Drying
mixed utensils and cutlery	part dried, common household food remnants	auto Auto 45° - 65°	All	**Sensor-controlled:** Is optimised according to the soiling with the aid of sensors.
mixed utensils and cutlery	part dried, common household food remnants	eco Eco 50°	All	**Most economical:** Pre Rinse Cleaning 50° Intermediate rinse Final rinse 63° Drying Eco drying The door opens automatically. → *"Operating the appliance" on page 28*
mixed utensils and cutlery	part dried, common household food remnants	Silence Silence 50°	intensiveZone Half load HygienePlus ExtraDry Shine and Dry	**Reduced noise:** Pre Rinse Cleaning 50° Intermediate rinse Final rinse 63° Drying
sensitive utensils, cutlery, temperature-sensitive plastic and glasses	lightly adhering, fresh food remains	Glass 40°	intensiveZone VarioSpeedPlus Half load ExtraDry Shine and Dry	**Particularly gentle:** Pre Rinse Cleaning 40° Intermediate rinse Final rinse 60° Drying

Type of dish	Type of soiling	Programme	Possible additional options	Programme sequence
mixed utensils and cutlery	part dried, common household food remnants	Quick 65°	Extra Dry Shine and Dry	**Time-optimised:** Cleaning 65° Intermediate rinse Final rinse 70° Drying
mixed utensils and cutlery	part dried, common household food remnants	**1 h** 65°	Extra Dry Shine and Dry	**Time-optimised:** Cleaning 65° Intermediate rinse Final rinse 70° Drying
sensitive utensils, cutlery, temperature-sensitive plastic and glasses	lightly adhering, fresh food remains	Quick 45°	Extra Dry Shine and Dry	**Time-optimised:** Cleaning 45° Intermediate rinse Final rinse 55°
All types of dishes	cold rinsing, intermediate cleaning	Pre Rinse	None	**Cold rinse** Pre Rinse
-	-	Easy Clean Machine Care	None	**Machine cleaning cycle 70°**

Programme selection

You can select a suitable programme according to the type of utensils and type of soiling.

Information for test institutes

Test institutes receive the information for comparability tests (e.g. according to EN60436).

These are the conditions for conducting the tests, however these are not the results or consumption values.
Request by e-mail to:
dishwasher@test-appliances.com
The product number (E no.) and the production number (FD) are required which you can find on the rating plate [33] on the appliance door.

Additional functions

* Depending on the features of your dishwasher, you can select different additional functions 7.

Save time (VarioSpeedPlus) *

The “Save time” function can reduce the running time by approx. 20% to 66% depending on the selected rinse programme. To obtain optimum cleaning and drying results at a reduced running time, water and energy consumption are increased.

Half load *

If you have only a few items to wash (e.g. glasses, cups, plates), you can switch to “half load”. This will save water, energy and time. It is recommended to put a little less detergent in the detergent dispenser than for a full load.

hygienePlus (HygienePlus) *

This function increases the temperatures and retains them for an extra long time to obtain a defined disinfection performance. Continuous use of this function increases the hygiene status. This additional option is ideal for cleaning e.g. chopping boards and baby bottles.

intensiveZone *

Perfect for a mixed load. You can wash very soiled pots and pans in the lower basket together with normally soiled utensils in the upper basket. The spray pressure in the lower basket is intensified, the rinsing temperature is increased slightly.

extraDry *

An increased temperature during the final rinse and an extended drying phase ensure that even plastic parts dry better. There is a slight increase in the energy consumption.

Shine and Dry *

By increasing the amount of water during the rinse cycle and extending the drying phase, stains are prevented and the drying result is improved. There is a slight increase in the energy consumption. Rinse aid is recommended for the high gloss drying function (even when using combination detergents).

Energy Save *

The “Energy Save” function can be used to reduce water and energy consumption. The running time is extended for optimum cleaning and drying results.

Operating the appliance

Programme data

The programme data (consumption values) can be found in the quick reference guide. They refer to normal conditions and the set water hardness value H:04. Different influencing factors such as water temperature or line pressure may result in deviations.

AquaSensor *

* depending on the features of your dishwasher

The Aqua sensor is an optical measuring device (light barrier) which measures the turbidity of the rinsing water.

The AquaSensor is used according to the programme. If the AquaSensor is active, “clean” rinsing water can be transferred to the next rinse bath and water consumption can be reduced by 3–6 litres. If the turbidity is greater, the water is drained and is replaced with fresh water. In the automatic programmes the temperature and running time can also be adjusted to the degree of soiling.

Eco drying

If you have selected the Eco 50° programme, the door opens automatically when the programme ends. This ensures a particularly economical drying result. You can switch Eco drying on or off.

Here’s how to change the setting:

1. Switch on ON/OFF switch [1].
2. Hold down the programme button [A] and then repeatedly press the START button [8] until H:0... appears in the display window.
3. Release both buttons.
   The LED of the [A] button flashes and the digital display [9] shows the factory setting H:04.
4. Press the programme button [A] repeatedly until the factory setting value o:01 appears in the display window [9].
5. Press the [C] button to switch Eco drying on o:01 or off o:00.
6. Press START button [8].

The set value is saved.

Notes

- Eco drying is activated only in conjunction with the Eco 50° programme.
- Eco drying is deactivated when
  - intensive drying is switched on.
  - the Eco 50° programme has been selected in conjunction with one or more additional functions.
  - the child lock* is activated.

* depending on the features of your dishwasher

Switching on the appliance

1. Turn tap fully on.
2. Switch on ON/OFF switch 1.
   The Eco 50° programme has been preset for environmentally friendly operation whenever the appliance starts. This programme remains selected if no other programme button 2 is pressed.
3. Press START button 8.

Programme sequence starts.

Note:
For ecological reasons the Eco 50° programme is preset whenever the appliance starts. This conserves environmental resources and not least saves you money.
The Eco 50° programme is a particularly environmentally friendly programme. According to EU regulation 1016/2010 it is the "Standard programme" which is the most efficient standard cleaning cycle for cleaning normally soiled utensils in terms of the combined energy and water consumption for cleaning these types of utensils.

timeLight (optical display while a programme is running) *

* depending on the configuration of your specific dishwasher

While a programme is running, an optical display (additional programme information) is projected onto the floor at the bottom of the appliance door. If the base panel is pulled forwards or if the appliance is installed at eye-level flush with the furniture then this display will not be visible.

Possible settings of the optical display:

5:00	The display is switched off.
5:01 / 5:02	The display can show the programme, the timed delay, remaining time and end of the programme.

The setting 5:01 is set up at the factory.

Here's how to change the setting:

1. Switch on ON/OFF switch 1.
2. Hold down the programme button A and then hold the START button 8 until H:0... appears in the display window 9.
3. Release both buttons.
   The illuminated display on the button A flashes.
4. Press the programme button A repeatedly until 5:0... appears in the display window 9. (for the optical display) together with the previously set value, for example 5:01.
5. Press the programme button C repeatedly until the desired value, for example 5:00, appears in the display window 9.
6. Press START button 8.

The set value is saved.

infoLight (optical display while a programme is running) *

* depending on the configuration of your specific dishwasher

While a programme is running, a light spot is projected onto the floor at the bottom of the dishwasher door. Do not open the dishwasher door until the light spot is no longer visible on the floor. If the door is not properly closed the light spot will flash.* If the appliance is installed at eye-level flush with the furniture, this display will not be visible.

Here's how to change the setting:

1. Switch on ON/OFF switch 1.
2. Hold down the programme button A and then repeatedly press the START button 8 until H:0.... appears in the display window.
3. Release both buttons.
   The LED of the A button flashes and the display window 9 lights up to show the value H:0...
4. Press the programme button A repeatedly until the factory setting value I:01 appears in the display window 9.
5. Press the C button to switch the function on I:00 or off I:01.
6. Press START button 8.

The set value is saved.

Remaining running time display

When the programme is selected, the remaining programme time is indicated in the display window 9.

*After the programme has started, the remaining running time is displayed on the floor (only for settings Timelight S:01 and S:02).

The running time is determined during the programme by the water temperature, the quantity of dishes as well as the degree of soiling and may vary (depending on the selected programme).

* depending on the features of your dishwasher

Time preselection *

* depending on the configuration of your specific dishwasher

You can delay the start of the programme in hourly steps by up to 24 hours.

Here's how to set up the delay:

1. Switch on ON/OFF switch 1.
2. Press the timer programming button 6 + repeatedly until 9 h 01 appears in the display window.
3. Keep pressing the timer programming button 6 - or + until the desired time is displayed.
4. Press START button 8.
   The delay timer has been activated.
5. To clear the specified delay, press the button 6 - or + repeatedly until 9 h 00 appears in the display window.

Until the programme has started, you can change your selection in any way you like.

Programme end

The programme has finished when the value 0:00 appears in the display window [9]. If a value has been set for the signal volume, then the end of the programme is also indicated by a buzzer.

Here's how to change the signal volume:

1. Switch on ON/OFF switch [1].
2. Hold down the programme button [A] and then repeatedly press the START button [8] until H:0... appears in the display window.
3. Release both buttons.
   The LED of the [A] button flashes and the digital display [9] shows the factory setting H:04.
4. Press the programme button [A] repeatedly until the factory setting value b:02 appears in the display window [9].
5. Press the programme button [C]. Each time the button is pressed the set value increases by one level; when it reaches the value b:03 the display jumps back to b:00 (off).
6. Press START button [8].

The set value is saved.

* The end of the programme is displayed n the floor (only for the settings Timelight 5:01 and 5:02).

Note: When Eco drying is activated, the end of the programme is not indicated by a buzzer.

* depending on the features of your dishwasher

Auto Power Off (Automatic switch off after end of programme) or interior lighting *

To save power you can set the dishwasher to switch off automatically from 1 minute to 120 minutes after the end of its programme. You can choose a setting from P:00 to P:02.

P:00 Appliance does not switch off automatically.
The interior light [20] comes on when the door is opened irrespective of whether the ON/OFF switch [1] is switched on or off. When the door is closed the light is off. If the door remains open for longer than 60 minutes the light will switch off automatically. The interior light [20] switches on only if the setting P:00 has been selected.

P:01 Appliance switches off after 1 minute.

P:02 The appliance switches off after 120 minutes.

Here's how to change the setting:
1. Switch on ON/OFF switch 1.
2. Hold down the programme button A and then repeatedly press the START button 8 until H:0... appears in the display window.
3. Release both buttons.
   The LED of the A button flashes and the digital display 9 lights up to show the value H:0....
4. Press the programme button A repeatedly until the value P:0... appears in the display window 9.
5. Press the programme button C.
   Each time the button is pressed, the set value increases by one level; when it reaches the value P:02 the display jumps back to P:00.
6. Press START button 8.

The set value is saved.

* depending on the features of your dishwasher

Switching off the appliance

Shortly after the end of the programme:
1. Switch off ON/OFF switch 1.
2. Turn off water supply (does not apply to appliances with Aqua-Stop).
3. Remove the utensils when they have cooled down.

About the Eco drying function:
When Eco drying is activated in the Eco 50° programme, the door opens automatically when the programme ends. This ensures the best possible drying result. Low amounts of steam may occur. **If you install the appliance under a worktop, fit the supplied steam protection film *** (follow the procedures in the installation instructions). The steam protection film protects sensitive fitted furniture and worktops from damage by water vapour. **Before opening the appliance, leave it to cool down for a while in the remaining programmes when the programme ends.**

Interrupting the programme

Caution!
Expansion (overpressure) may cause the appliance door to jump open and/or water to escape! If the door was opened on an appliance which has a hot water connection or is heated, always leave the door ajar for several minutes and then close it.

1. Switch off ON/OFF switch 1.
   The LEDs go out. The programme is saved.
2. Switch on the ON/OFF switch 1 again to continue the programme.

Terminating the programme (Reset)

1. Open the door.
2. Press the START button 8 and hold it down for about 3 seconds. The value 0:01 appears in the display window 9.
3. Close the door. The programme sequence lasts about 1 minute. The value 0:00 appears in the display window 9.
4. Open the door.
5. Switch off ON/OFF switch 1.
6. Close the door.

Changing the programme

When the START button 8 has been pressed, the programme cannot be changed. The only way a programme can be changed is by Cancel programme (Reset).

ExtraDry

The final rinse uses a higher temperature which improves the drying result. The running time may increase slightly. (Be careful if you have delicate tableware)

Here's how to change the setting:

1. Switch on ON/OFF switch 1.
2. Hold down the programme button A and then repeatedly press the START button 8 until H:0... appears in the display window 9.
3. Release both buttons. The LED of the A button flashes and the digital display 9 shows the factory setting H:04.
4. Press the programme button A repeatedly until the factory setting value d:00 appears in the display window 9.
5. By pressing the C button you can switch intensive drying on d:01 or off d:00.
6. Press START button 8.

The set value is saved.

Note: When intensive drying is switched on, Eco drying is deactivated.

Cleaning and maintenance

A regular inspection and maintenance of your machine will help to prevent faults. This saves time and prevents problems.

Overall status of the dishwasher

*The interior of your dishwasher is predominantly self-cleaning. In order to remove deposits, your dishwasher automatically changes the running of the programme (such as by increasing the cleaning temperature) at certain intervals. This will lead to higher consumption values when running this programme.

*Depending on the features of your dishwasher

If you should find deposits in the interior of the dishwasher in spite of this, remove these deposits as follows:

1. Fill the detergent dispenser 31 with detergent.
2. Select the programme with the highest temperature.
3. Start the programme without dishes.

Warning
Health hazard due to detergents containing chlorine!
Always use chlorine-free detergents.

Notes

- Only clean the appliance with special detergents/appliance cleaners which are suitable for use with dishwashers.
- Regularly wipe the door seals using a damp cloth and a little washing-up liquid. This will keep the door seal clean and hygienic.
- Leave the door open slightly if the appliance will not be used for a while. This will prevent an unpleasant odour from developing.
- Never clean the dishwasher using a steam cleaner. The manufacturer is not liable for any consequential damage.
- Wipe the front of the dishwasher and the control panel regularly using a damp cloth and a little washing-up liquid.
- Do not use sponges with a rough surface or abrasive detergents. These could scratch the surface.
- For dishwashers with a stainless steel front, avoid using sponge cloths, or rinse these thoroughly several times before using them for the first time. This will prevent corrosion.

Machine Care *

Machine Care used in combination with commercially available machine cleaning detergent is a suitable programme for cleaning your dishwasher. Deposits such as grease and limescale can cause your dishwasher to malfunction. In order to avoid such faults and to reduce the development of odours, we recommend cleaning the dishwasher at regular intervals.

* As soon as the Machine Care display lights up in the control panel, or you are advised to do so on the front display, run the Machine cleaning programme Machine Care **without** loading any tableware. After you have run the Machine Care the display in the control panel will go out.

If your dishwasher does not have a reminder function, follow the instructions for use on the machine cleaning detergents.

Notes

- Remove any coarse soiling in the interior using a damp cloth.
- Run the programme without dishes, and in combination with a machine cleaning detergent.
- Use a special machine cleaning detergent, and not dishwasher detergent.
- Observe the safety instructions and the instructions for use on the machine cleaning detergent packaging.
- *After three rinse cycles, the display in the control panel will go out automatically, even if you have not run the Machine cleaning cycle programme.

* depending on the features of your dishwasher

Special salt and rinse aid

Top up the salt and/or rinse aid as soon as either of the refill indicators on the control panel 4 or 5 lights up.

Filters

The filters [27] keep large foreign objects in the rinsing water away from the pump. hese foreign objects may occasionally block the filters.

The filter system consists of
- a coarse filter
- a flat fine filter
- a microfilter

1. After each washing cycle check the filters for residue.
2. Unscrew filter cylinder as illustrated and take out filter system.

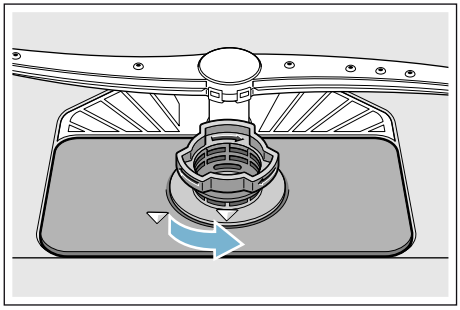

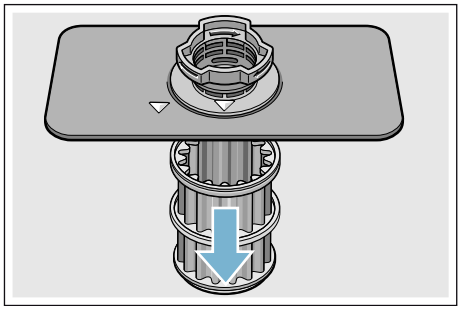

3. Remove any residue and clean filters under running water.
4. Re-install filter system in reverse sequence and ensure that the arrow marks are opposite each other after closing the filter system.

Spray arms

Limescale
and contaminants in the rinsing water may block nozzles
and bearings on the spray arms [23] and [25].

1. Check outlet nozzles on the spray arms for blockages.
2. Unscrew the upper spray arms [23] (1/4 revolution).

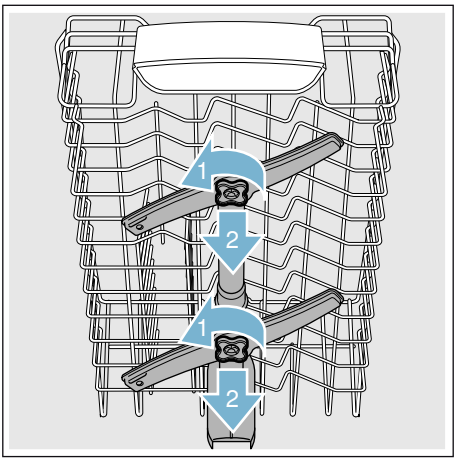

3. Remove the lower spray arm 25 upwards.

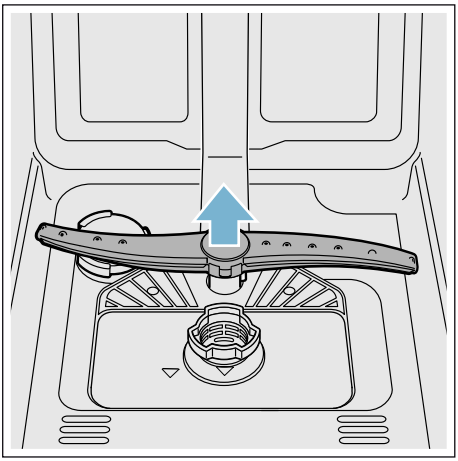

4. Clean spray arms under running water.
5. Re-engage or screw on spray arms.

Fault, what to do?

Experience has shown that you can rectify most faults which occur in daily operation yourself. This ensures that the appliance is quickly available to you again. In the following overview you can find possible causes of malfunctions and helpful information for rectifying them.

Note: If the appliance stops during dishwashing or does not start for no obvious reason, first run the Abort programme function (Reset)
→ *"Operating the appliance" on page 28*.

Warning
Improper repairs or use of non-original spare parts may cause considerable damage and put the user at considerable risk!
Always have repairs carried out by technicians. If a component has to be replaced, always use original spare parts.

Waste water pump

Large food remnants or foreign objects which were not captured by the filters may block the waste water pump. The rinsing water will then be above the filter.

⚠ Warning
Danger of cutting!
Sharp and pointed objects or glass fragments may block the waste water pump.
Always carefully remove foreign objects.

Clean the waste water pump as follows:

1. Disconnect the dishwasher from the power supply.
2. Take out top basket [22] and bottom basket [29].
3. Remove the filters [27].
4. Scoop out water, use a sponge if required.
5. Prise off the pump cover (as shown) using a spoon. Grip the pump cover by the crosspiece and lift diagonally inwards (1). Remove cover completely.

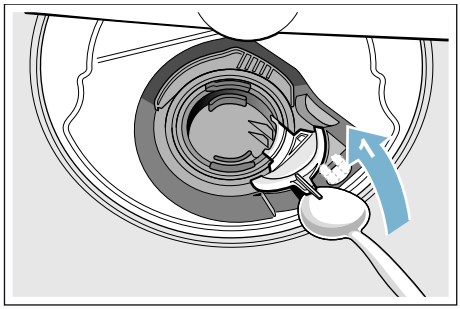

6. Check impeller wheel and remove any foreign objects.
7. Place pump cover in the original position (2) and press down until it engages (3).

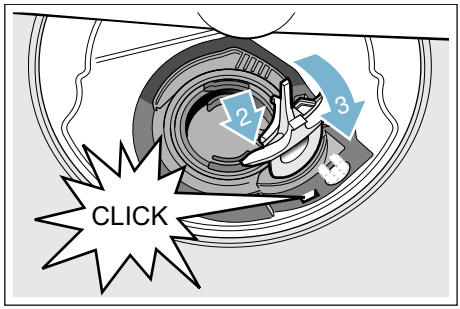

8. Install filters.
9. Re-insert baskets.

Fault table

Fault	Reason	Remedial action
"Check water supply" display lights up.	Supply hose kinked.	Install supply hose without kinks.
	Tap turned off.	Turn on water supply.
	Tap jammed or calcified.	Turn on water supply. Flow rate must be at least 10 l/min. when water supply is open.
	Filter in the water supply blocked.	Switch off the appliance and pull out the mains plug. Turn off water supply. Unscrew water connection. 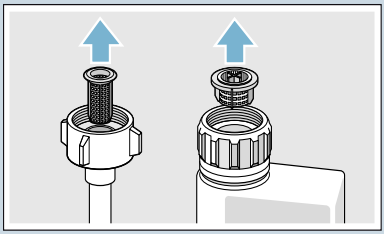 Clean filter in the supply hose. Screw water connection on again. Check for leaks. Reconnect power supply. Switch on the appliance.
Fault code E:07 is lit.	Intake opening (on right inside of appliance) covered by utensils.	Arrange utensils so that the intake opening is not obstructed.
Fault code E: 12 is lit.	Heating element calcified or soiled.	Clean appliance with dishwasher cleaning agent or descaler. Operate the dishwasher with water softening system and check the setting.⟶ *"Water softening system/special salt" on page 13*
Fault code E: 14 is lit.	Water protection system activated.	Turn off water supply. Call customer service and quote the fault code.
Fault code E: 15 is lit.		
Fault code E: 16 is lit.	Constant water supply.	
Fault code E:22 is lit.	Filters [27] are soiled or blocked.	Clean filters. ⟶ *"Filters" on page 36*

* depending on the features of your dishwasher

Fault	Reason	Remedial action
Fault code E:24 is lit.	Waste-water hose kinked or blocked.	Install hose without kinks, remove any residue.
	Siphon connection still sealed.	Check connection to siphon and open if required.
	Cover on the waste water pump loose.	Lock cover correctly. ⟶ *"Waste water pump" on page 38*
Fault code E:25 is lit.	Waste water pump blocked or cover on the waste water pump is not locked in position.	Clean pump and lock cover correctly. ⟶ *"Waste water pump" on page 38*
Fault code E:27 is lit.	Mains voltage too low.	No appliance fault, have the mains voltage and electrical installation checked.
A different fault code is indicated on the digital display. (E:01 to E:30)	A technical fault has probably occurred.	Switch off the appliance with the ON/OFF switch [1]. After a short time restart the appliance. If the problem recurs, turn off water supply and pull out the mains plug. Call customer service and quote the fault code.
L or H appears on the digital display [9]. *	Not a fault!	See turboSpeed 20 min. in the chapter "Overview of programmes". *
Refill indicator for salt [4] and/or rinse aid [5] is lit.	No rinse aid.	Refill rinse aid.
	No salt.	Refill with special salt.
	Sensor does not detect salt tablets.	Use different special salt.
Refill indicator for salt [4] and/or rinse aid [5] is not lit.	Refill indicator switched off.	Activation/deactivation (see chapter "Water softening system/Special salt" ⟶ *Page 13* or "Rinse aid" ⟶ *Page 15*).
	There is still enough special salt/rinse aid available.	Check refill indicator, levels.
Water is left in the appliance at the end of the programme.	Filter system or area under the filters [27] is blocked.	Clean filters and area underneath.
	Programme has not yet finished	Wait until programme ends or reset.

* depending on the features of your dishwasher

Fault	Reason	Remedial action
Utensils not dry.	Not enough rinse aid in the dispenser, or none at all.	Refill rinse aid.
	Programme without drying was selected.	Select programme with drying. → *"Overview of programmes" on page 25*
	Water collecting in depressions on the utensils and cutlery.	Arrange utensils in a sloping position, arrange affected utensils as sloping as possible. 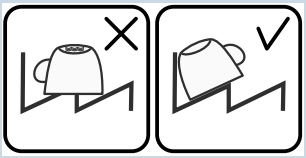
	The combined detergent used has a poor drying performance.	Use different combination detergent with better drying performance. Use of rinse aid also improves the drying performance.
	The extra drying option to increase drying was not activated.	Activate intensive drying. → *"Operating the appliance" on page 28*
	Utensils were removed too early or drying process had not ended yet.	Wait until the programme ends, or wait until 30 minutes after the end of the programme before removing the utensils.
	The eco rinse aid used has a limited drying performance.	Use a proprietary rinse aid. Eco products may have limited effectiveness.
	Door does not open automatically at the end of the Eco 50° programme. Door gap is not set correctly.	Set the door correctly with the aid of the installation instructions so that the door gap is at least 70 mm - 100 mm.
Plastic utensils not dry.	Special properties of plastic.	Plastic has a lower heat storage capacity and therefore dries less well.
Cutlery not dry.	Cutlery not arranged properly in the cutlery basket.	Separate cutlery if possible, prevent contact points.
	Cutlery not arranged properly in the cutlery drawer.	Arrange cutlery properly and separate if possible.
Appliance interior wet after wash cycle.	No appliance fault.	On account of the "Condensation drying" principle, water droplets are physically induced and required in the container. The humidity in the air condenses on the inner walls of the dishwasher, drains and is pumped out.

* depending on the features of your dishwasher

Fault	Reason	Remedial action
Food remnants on the utensils.	Utensils placed too closely together, utensils basket overfilled.	Arrange utensils with adequate clearance between them ensuring that the spray jets can reach the surface of the utensils. Prevent contact points.
	Spray arm rotation obstructed.	Arrange utensils so that the spray arm can rotate without obstruction.
	Spray arm nozzles are blocked.	Clean the spray arm nozzles. ⟶ *"Cleaning and maintenance" on page 34*
	Filters [27] dirty.	Clean filters. ⟶ *"Cleaning and maintenance" on page 34*
	Filters [27] inserted incorrectly and/or not engaged.	Insert and engage filters correctly.
	Wash programme too weak.	Select a more intensive wash programme. Increase sensitivity of the sensors.
	Utensils precleaned too intensely; sensors therefore decide on weak programme sequence. Stubborn soiling cannot be completely removed.	Do not prerinse utensils. Remove only large food remnants. Increase sensitivity of the sensors. Recommended programme Eco 50° or Intensive.
	Tall narrow receptacles in corner areas are not rinsed adequately.	Do not place hollow receptacles too obliquely and do not place in the corner area.
	Top basket [22] on right and left not set to same height.	Set top basket to same height using side levers.
Food remnants on the dishes when pause function is used. *	Dishes added too late.	Only interrupt the rinse programme in the initial phase to add more dishes.
* depending on the features of your dishwasher		

Fault	Reason	Remedial action
Detergent residue	Detergent dispenser cover [31] blocked by utensils and therefore does not open fully.	Utensils must not be placed above the tablet collecting tray [24]. These may block the lid of the detergent dispenser and prevent it from opening fully. → *"Upper basket" on page 17* Do not place utensils or fragrance dispenser in the tablet collecting tray.
	Detergent dispenser cover [31] blocked by the tablet.	Tablet must be inserted flat and not upright.
	Tablets used in the quick or short programme. Dissolving time of the detergent is not reached in the selected short programme.	Dissolving time of tablets too long for a quick or short programme. Use a detergent powder or select a more intensive programme.
	Washing effect and dissolving performance are reduced after a prolonged storage time or detergent is very lumpy.	Change detergent.
Water stains on plastic parts.	Droplet formation on plastic surface is physically unavoidable. After drying, water stains are visible.	Use a more intensive programme (more water changes). Arrange utensils in a sloping position. Use rinse aid. If required, increase softening setting.
Washable or water-soluble coatings in the container or on the door.	Detergent substances are deposited. These coatings cannot usually be removed with chemicals (appliance cleaner, ...).	Change detergent brand. Clean appliance mechanically.
	If there is a "white coating" on the container floor, the water softening system has been set marginally.	Increase softening setting and change detergent if required.
	Salt dispenser cover [26] not closed.	Close salt dispenser cover correctly.
	Only for glasses: Initial glass corrosion – can only apparently be wiped off.	See "Glass and utensil damage" → *Page 16*.

* depending on the features of your dishwasher

Fault	Reason	Remedial action
White, stubborn coatings; limescale on the utensils, container or door.	Detergent substances are deposited. These coatings cannot usually be removed with chemicals (appliance cleaner, ...).	Change detergent brand. Clean appliance mechanically.
	Hardness range incorrectly set or water hardness greater than 8.9 mmol/l.	Set water softening system according to instructions for use or top up salt.
	3 in 1 detergent or bio/eco detergent not effective enough.	Set water softening system according to instructions for use or use separate detergents (proprietary detergent, salt, rinse aid).
	Underdosing of detergent.	Increase detergent dosage or change detergent.
	Too gentle wash programme selected.	Select a more intensive wash programme.
Tea or lipstick residue on the utensils.	Too low rinsing temperature.	Select programme with higher washing temperature.
	Too little or unsuitable detergent.	Use suitable detergent at correct dosage.
	Utensils precleaned too intensely; sensors therefore decide on weak programme sequence. Stubborn soiling cannot be completely removed.	Do not prerinse utensils. Remove only large food remnants. Increase sensitivity of the sensors. Recommended programme Eco 50°
Coloured (blue, yellow, brown), difficult to remove to non-removable coatings in the appliance or on stainless steel utensils.	Film formation consisting of ingredients from vegetables (e.g. cabbage, celery, potatoes, noodles, ...) or the tap water (e.g. manganese).	Can be partly removed with machine cleaner or by mechanical cleaning. Coatings are harmless.
	Film formation caused by metallic components on silver or aluminium utensils.	Can be partly removed with machine cleaner or by mechanical cleaning.
Coloured (yellow, orange, brown), easily removable deposits inside the appliance (mainly in the floor area).	Film formation consisting of ingredients from food remnants and substances from the tap water (limescale), “soapy”	Check function of the water softening system (refill with salt) or, if using combined detergents (tablets), activate water softening system.
Discolouration of the plastic parts inside the appliance.	Plastic parts inside the appliance may become discoloured during the service life of the dishwasher.	Discolouration is normal and will not impair the function of the dishwasher.
* depending on the features of your dishwasher		

Fault	Reason	Remedial action
Plastic parts discoloured.	Too low rinsing temperature.	Select programme with higher washing temperature.
	Utensils precleaned too intensely; sensors therefore decide on weak programme sequence. Stubborn soiling cannot be completely removed.	Do not prerinse utensils. Remove only large food remnants. Increase sensitivity of the sensors. Recommended programme Eco 50°
Removable streaks on glasses, glasses with metallic appearance and cutlery.	Too much rinse aid.	Set rinse aid amount to lower setting.
	No rinse aid added or setting too low.	Add rinse aid and check dosage (recommended setting 4–5).
	Detergent residue in the final rinse. Detergent dispenser cover blocked by utensils (cover does not open fully).	Detergent dispenser cover must not be obstructed by utensils. Do not place utensils or fragrance dispenser in the tablet collecting tray.
	Utensils precleaned too intensely; sensors therefore decide on weak programme sequence. Stubborn soiling cannot be completely removed.	Do not prerinse utensils. Remove only large food remnants. Increase sensitivity of the sensors. Recommended programme Eco 50°
Initial or existing, irreversible clouding of glass.	Glasses not dishwasher-proof, only suitable for dishwasher.	Use dishwasher-proof glasses. Avoid long steam phase (standing time after wash cycle ends). Use wash cycle at lower temperature. Set water softening system according to the water hardness (if required one setting lower). Use detergent with glass protection component.
Rust spots on the cutlery.	Cutlery is not sufficiently rust-resistant. Knife blades are frequently more severely affected.	Use rust-resistant cutlery.
	Cutlery will also rust if rusting parts are rinsed at the same time (pan handles, damaged utensil baskets, etc.).	Do not wash rusting parts.
	Salt content in the rinsing water too high, as salt dispenser lock not fastened firmly or salt was spilled while being refilled.	Fasten salt dispenser lock firmly or remove spilled salt.

* depending on the features of your dishwasher

Fault	Reason	Remedial action
Appliance cannot be switched on or operated.	Malfunction.	Disconnect appliance from the power supply; pull out the mains plug or switch off the fuse. Wait at least 5 seconds, then connect the appliance to the power supply.
Appliance does not start.	The mains fuse has tripped.	Check mains fuse.
	Power cord not inserted.	Ensure that the power cord is plugged all the way into the back of the appliance and into the socket. Check that the socket functions.
	The appliance door has not been shut properly.	Close the door.
	Pause function is active. *	Press the Start button 8. *
Programme starts automatically.	You did not wait until programme ended.	Perform reset.
Door does not open automatically at the end of the Eco 50° programme.	Eco drying deactivated.	Activate Eco drying. ⟶ *"Operating the appliance" on page 28*
	Button lock/childproof lock is activated. *	Deactivate button lock/childproof lock. *
	Eco 50° programme not selected.	Select Eco 50° programme.
	Additional functions selected.	Deselect additional functions.
	Intensive drying switched on.	Switch off intensive drying.
	Door is not set correctly.	Set the door correctly with the aid of the installation instructions so that the door gap is at least 70 mm - 100 mm.
	Door and door seal dirty.	Clean door and door seal with a damp cloth and a little washing-up liquid.
	Wrong screws used to adjust the door gap. If excessively long screws are screwed in, they may deactivate Eco drying.	To adjust the door gap, use screws which have a max. size of ø 4X30 (included in the product package, see installation instructions).
	Safety device switches the Eco drying function off. A technical fault has probably occurred.	Call the after-sales service.
The door is difficult to open.	Child-proof lock is activated.	Deactivate childproof lock.

* depending on the features of your dishwasher

Fault	Reason	Remedial action
Door cannot be closed.	Door lock has been activated.	Close door with increased force.
	Door cannot be closed due to installation.	Check appliance installation: Door or attached parts must close without obstruction.
Cover on the detergent dispenser cannot be closed.	Detergent dispenser or cover guide blocked by sticky detergent residue	Remove detergent residue.
Detergent residue in the detergent dispenser [31] or in the tablet collecting tray [24].	Spray arms blocked by utensils, therefore detergent is not rinsed out.	Ensure that the spray arms can rotate freely.
	The detergent dispenser was damp when filled.	Pour detergent into the dry detergent dispenser only.
Appliance stops in the programme or programme is interrupted.	Door not closed properly.	Close the door.
	Do not place utensils or fragrance dispenser in the tablet collecting tray. Top basket presses against the door and prevents door from being closed securely.	Check whether rear panel is being pressed in, e.g. by socket or by hose holder which has not been removed.
	Power and/or water supply interrupted.	Restore power and/or water supply.
Filling valves making striking noises.	Depends on domestic installation, as no appliance fault. No effect on appliance function.	No remedial action possible.
Knocking or rattling noise.	Spray arm strikes the utensils, utensils not positioned correctly.	Position utensils so that the spray arms do not strike the utensils.
	If there is a low load, the water jets strike the washing tank directly.	Load the appliance with more utensils or distribute the utensils more evenly in the dishwasher.
	Light utensils move during the wash cycle.	Arrange light utensils securely.
Unusual foam formation.	Hand washing-up liquid in the rinse aid dispenser.	Immediately refill rinse aid dispenser with rinse aid.
	Rinse aid spilled.	Remove rinse aid with a cloth.

* depending on the features of your dishwasher

Customer service

If you are unable to rectify the fault, please contact your customer service. We will always find an appropriate solution in order to avoid unnecessary visits by engineers. Contact information for your nearest customer service can be found on the back of these instructions for use or on the enclosed customer service list. When calling, please state the appliance number (E-Nr. = 1) and the production number (FD = 2) which can be found on the rating plate 33 on the appliance door.

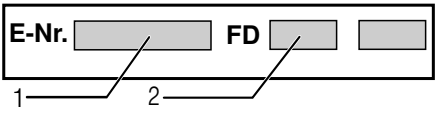

Trust the expertise of the manufacturer. Contact us for assistance. You can therefore be sure that the repair is carried out by trained service technicians who carry original spare parts for your domestic appliances.

Installation and connection

The dishwasher must be connected correctly, otherwise it will not function properly. The specifications for the inlet and outlet as well as the electrical connected loads must correspond with the required criteria as specified in the following paragraphs or in the installation instructions.

Install the appliance in the correct sequence:

1. Checking appliance on delivery
2. Installation
3. Drainage connection
4. Drinking water connection
5. Electrical connection

Contents of package

If you have any complaints, contact the dealer from whom you purchased the appliance or our customer services.

- Dishwasher
- User manual
- Installation instructions
- Quick reference guide*
- Warranty*
- Installation materials
- Steam guard plate*
- Rubber apron*
- Power cord

* depending on the features of your dishwasher

Safety instructions

Please follow the safety instructions under ⟶ *"Installation" on page 5*.

Delivery

Your dishwasher has been checked thoroughly in the factory to ensure that it is in working order. This may cause small water stains. These will disappear after the first wash cycle.

Technical specifications

- **Weight:**
  up to 45 kg
- **Voltage:**
  220–240 V, 50 Hz or 60 Hz
- **Connected load:**
  2000 - 2400 W.
- **Fuse:**
  10/16 A (UK 13 A).
- **Power input:**
  Off mode (Po)* 0.10 W.
  Left On mode (Pl)* 0.10 W.
  *according to regulations (EU) nos. 1016/2010 and 1059/2010.
  Additional functions and settings may increase the power consumption.
- **Water pressure:**
  at least 0.05 MPa (0.5 bar), maximum 1 MPa (10 bar).
  At a higher water pressure: connect pressure-reducing valve ahead.
- **Inlet rate:**
  minimum 10 litres/minute
- **Water temperature:**
  cold water.
  Hot water:
  Maximum temperature 60 °C.
- **Capacity:**
  9–10 place settings (depending on the features of your dishwasher).

Installation

The required installation dimensions can be found in the installation instructions. Level the appliance with the aid of the height-adjustable feet. Ensure that the appliance is situated securely on the floor.

- A built-under or integrated appliance which is installed subsequently as a free-standing appliance must be secured to prevent it from overturning, e.g. by screwing it to the wall or by installing it under a continuous worktop which is screwed to adjacent cupboards.
- The appliance can easily be installed in a fitted kitchen between wooden and plastic walls.

Drainage connection

1. The required work sequence can be found in the installation instructions. If required, fit a siphon with an drainage connection.
2. Connect the waste-water hose to the drainage connection of the siphon with the enclosed parts.
   Ensure that the drainage hose is not kinked, crushed or twisted and that there is no cover plate in the drainage to prevent the waste water from flowing out!

Drinking water connection

1. Fasten the drinking water connection to the tap according to the installation instructions using the enclosed parts.
   Ensure that the drinking water connection is not kinked, crushed or twisted.
2. When replacing the appliance, always use a new water supply hose.

Water pressure:
at least 0.05 MPa (0.5 bar), maximum 1 MPa (10 bar).
At a higher water pressure:
connect pressure-reducing valve ahead.
Inlet rate:
minimum 10 litres/minute
Water temperature:
cold water.
Hot water:
Maximum temperature 60 °C.

Warm water connection*

* depending on the configuration of your specific dishwasher

The dishwasher can be connected to cold or hot water up to max. 60°C. Connection to hot water is recommended if the hot water can be supplied by energetically favourable means and from a suitable installation, e.g. solar heating system with circulation line. This will save energy and time. The hot water setting A:01 allows you to adjust your appliance optimally to operation with hot water. It is recommended to have a water temperature (temperature of the incoming water) of at least 40 °C and no more than 60 °C. It is not recommended to connect the appliance to hot water if the water is supplied from an electric boiler.

Here's how to change the hot water setting:

1. Switch on ON/OFF switch 1.
2. Hold down the programme button A and then repeatedly press the START button 8 until H:0... appears in the display window.
3. Release both buttons.
   The LED of the A button flashes and the digital display 9 lights up to show the value H:0....
4. Press the programme button A repeatedly until the factory setting value A:00 appears in the display window 9.
5. By pressing the C button, you can switch the hot water setting off A:00 or on A:01.
6. Press START button 8.

The set value is saved.

Electrical connection

- Connect the appliance to an alternating current only, ranging from 220 V to 240 V and 50 Hz or 60 Hz via a correctly installed socket with protective earth conductor. See rating plate for required fusing [33].
- The socket must be near the appliance and freely accessible following installation.
  If the plug is not freely accessible, an allpole disconnector with a contact opening of at least 3 mm must be fitted on the installation side to satisfy the relevant safety instructions.
- The connection may be modified by technicians only.
- A power cord extension may be purchased from customer service only.
- Use only a residual current operated circuit-breaker which features the symbol [⏦]. Only this extension guarantees compliance with the currently valid regulations.
- The appliance features a water damage protection system. Please note the system will function **only** when the power supply is connected.

Removal

Also observe the sequence of worksteps here.

1. Disconnect the appliance from the power supply.
2. Turn off the tap.
3. Undo the waste water and drinking water connection.
4. Loosen fastening screws for the furniture parts.
5. If fitted, remove the base panel.
6. Pull out the appliance, carefully pulling the hose behind.

Transporting

Empty the dishwasher and secure loose parts.

Drain the appliance according to the following steps:

1. Turn on water supply.
2. Switch on ON/OFF switch [1].
3. Select programme with the highest temperature.
   The estimated programme duration appears in the display window [9].
4. Press START button [8].
   Programme sequence starts.
5. After about 4 minutes, repeatedly press the START button [8] until 0:01 appears in the display window.
   After about 1 minute the display window will show 0:00.
6. Switch off ON/OFF switch [1].
7. Turn off water supply, disconnect supply hose and drain water.

Note: Always transport the dishwasher upright. This prevents residual water from getting into the machine's controls and causing the programme sequence to malfunction.

Protection against frost

If the appliance is in a room where there is a risk of frost (e.g. holiday home), empty the appliance completely (see Transportation).

Subject to changes.

AQUA-STOP guarantee

en

(does not apply to appliances without Aqua-Stop)

In addition to warranty claims against the seller based on the purchase contract and in addition to our appliance warranty we will pay damages under the following conditions:

1. If our Aqua-Stop system is defective and causes water damage, we will make good the damage for private users. To ensure water damage protection, the appliance **must** be connectedto the power supply.

2. This liability guarantee is valid for the service life of the appliance.

3. A prerequisite for the warranty claim is that the appliance has been correctly installed and connected with Aqua-Stop according to our instructions. This also includes the correct installation of the Aqua-Stop extension (original accessory). Our warranty does not extend to defective feed lines or fittings up to the Aqua-Stop connection on the tap.

4. If your appliance is fitted with Aqua-Stop, you can leave your appliance unattended during operation and leave the tap turned on afterwards. The tap should only be turned off if you are absent from home for a prolonged period, e.g. several weeks holiday.

BSH Hausgeräte GmbH

Carl-Wery-Straße 34
81739 München, Germany

To book an engineer visit and product advice

GB	0344 892 8999	Calls from a BT landline will be charged at up to 3 pence per minute. A call set-up free of up to 6 pence may apply.
IE	01450 2655	0.03 € per minute at peak. Off peak 0.0088 € per minute.
US	866 447 4363	toll-free

Please find the contact data of all countries in the enclosed customer service list.

Internet: www.siemens-home.bsh-group.com

Manufactured by BSH Hausgeräte GmbH under Trademark License of Siemens AG

9001310456
(9706) 440 MV