Oberbecksener Straße 97 | D-32547 Bad Oeynhausen
Fon: +49(0)57 31-7 55 07-0 | Fax: -7 55 07-60
Email: info@hagor.net | www.hagor.net

ScreenOut® OH75 Landscape

Item no.: 5885

Outdoor totem for Samsung OH75 series

The ScreenOut® OH75 Landscape is a highly weather proof totem which has been developed specifically for the screens of the Samsung OH75 model series.

The Samsung OH series screens are already waterproof and dust proof according to IP56 standard and can be used in an ambient temperature range from -30 °C to +50 °C. In addition the display front consists of 5 mm thick, robust protective glass, which has been certified with IK-10 (IK = European impact resistance level).

The screen mounting is adapted to the specific display. It can be mounted in landscape format.

The standard version of the slim outdoor totem is designed for permanent installation by using a foundation*.

Hagor provides a dimensioned drawing of the required hole pattern.

The cable routing is secure and concealed inside of the totem. A cable outlet located in the base, protects reliably against any unauthorised access.

The surfaces are coated with a corrosion resistant, highly weather proof plastic powder coating in black (RAL 9005).

Note: Installations in the immediate vicinity of the coast or in particularly corrosive environments may require enhanced corrosion protection. Please contact us to discuss a suitable design.



Landscape format



Concealed cable routing

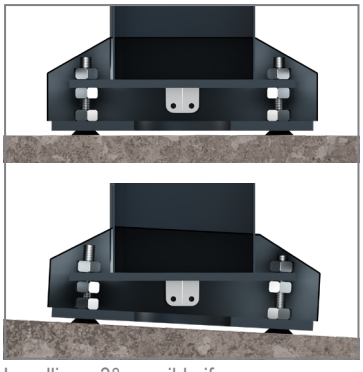

Levelling ±3° possible if necessary



CERTIFIED BY SAMSUNG

Technical changes reserved. | This document is the property of HAGOR Products GmbH. Forwarding and duplication of this document, utilization and communication of its contents are not permitted unless expressly permitted. A violation obliges you to pay compensation. All rights reserved in the event of a patent, utility model or design registration.

Oberbecksener Straße 97 | D-32547 Bad Oeynhausen
Telefon: +49(0)57 31-7 55 07-0 | Fax: -7 55 07-60
E-Mail: info@hagor.de | www.hagor.de

ScreenOut® OH75 Landscape

Outdoor totem for Samsung OH75 series

Item no.: 5885

- Outdoor totem with highly weather proof and corrosion resistant plastic powder coating
- Designed for the screens of the Samsung OH75 model series
- Landscape format
- Matching screen mount for Samsung OH displays
- Ambient temperature range from -30° C to +50° C (Display)
- ±3° levelling possible if necessary
- Can be mounted at 2 heights
- Concealed cable routing, one cable outlet located in the base for maximum security
- Standard version designed for permanent installation by using a foundation*. Hagor provides a dimensioned drawing of the required hole pattern
- Highly weather proof and corrosion resistant plastic powder coating
- Colour: black (RAL 9005)

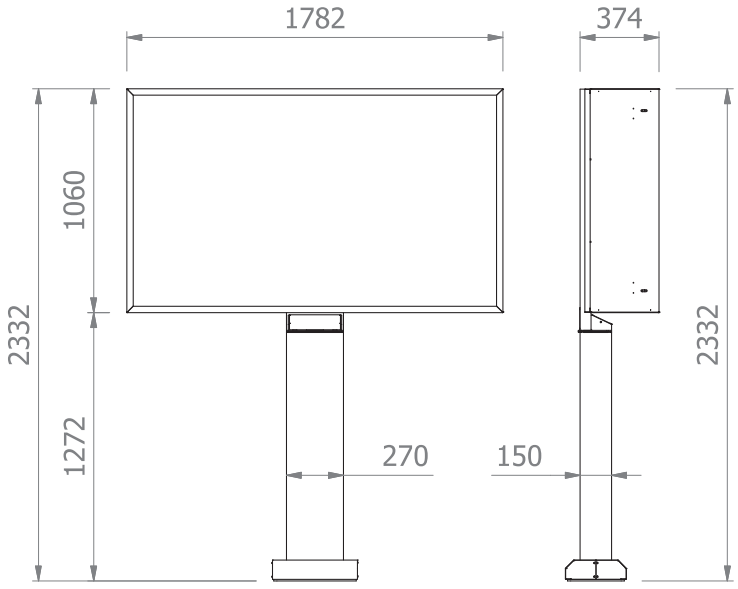

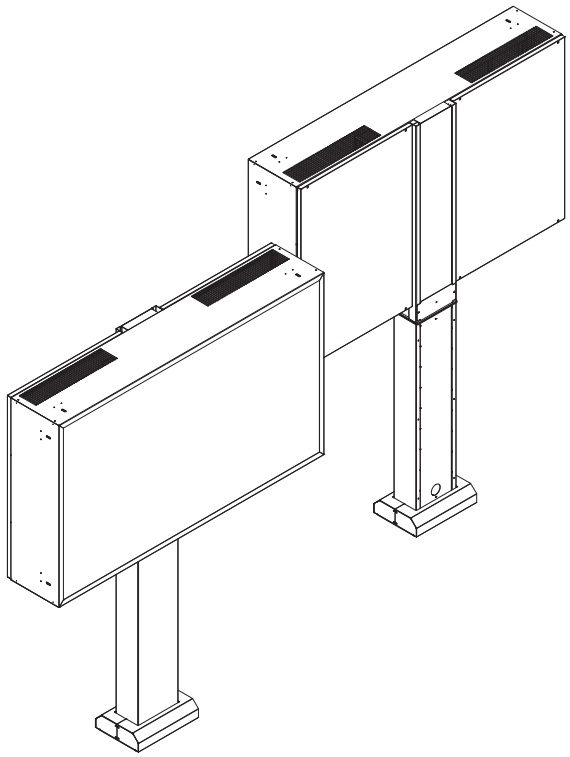

CERTIFIED BY SAMSUNG

* Attention! The foundation plan must be requested by the customer from a structural engineering office and adapted to the local conditions. In case of a free installation, please inform yourself about the prevailing wind loads on site.

Technical changes reserved. | ScreenOut® is a registered trademark of HAGOR Products GmbH.

Oberbecksener Straße 97 | D-32547 Bad Oeynhausen
Telefon: +49(0)57 31-7 55 07-0 | Fax: -7 55 07-60
E-Mail: info@hagor.de | www.hagor.de

ScreenOut® OH75 Landscape

Outdoor totem for Samsung OH75 series

Item no.: 5885

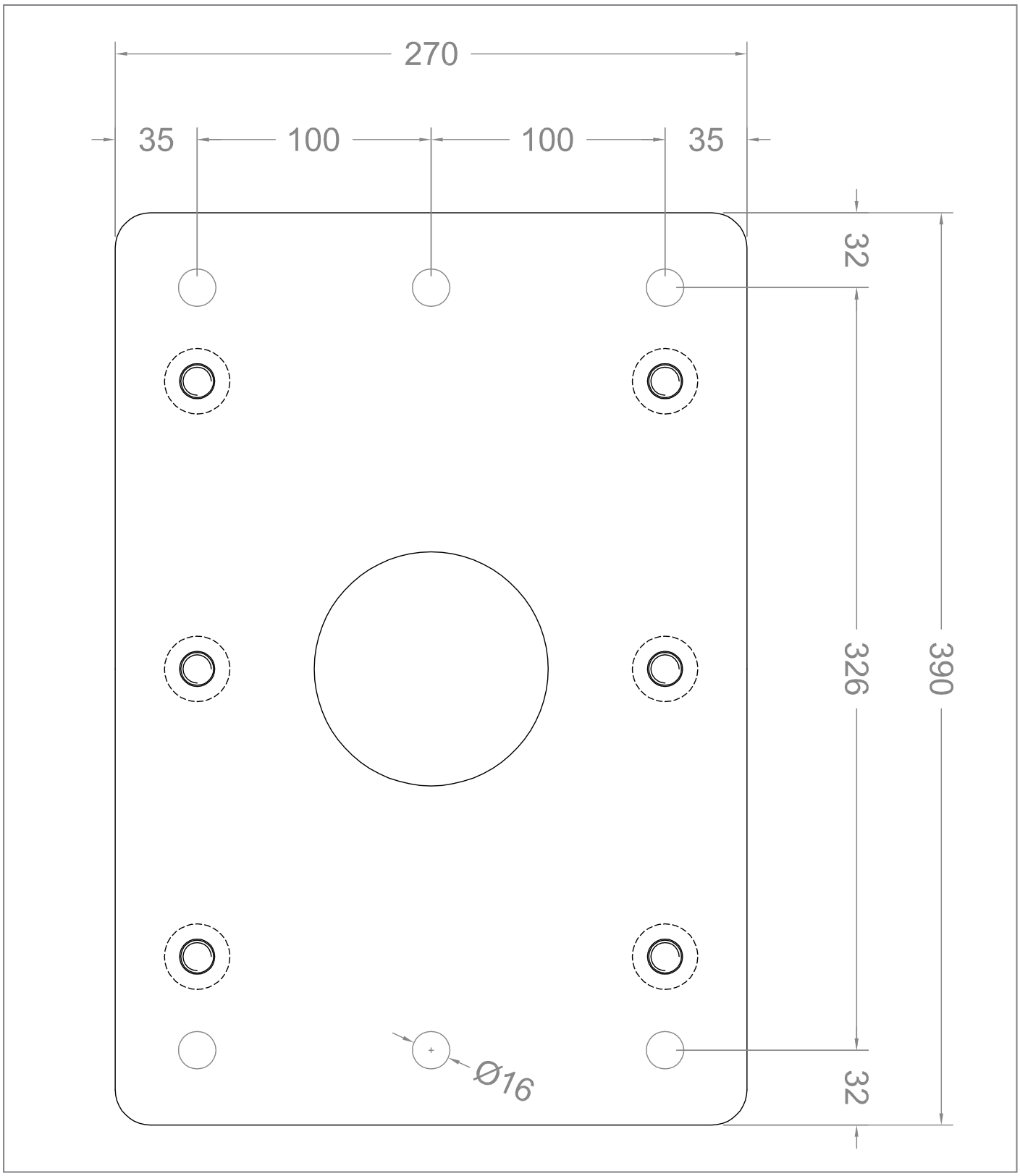

* Attention! The foundation plan must be requested by the customer from a structural engineering office and adapted to the local conditions.
In case of a free installation, please inform yourself about the prevailing wind loads on site.

Technical changes reserved. | ScreenOut® is a registered trademark of HAGOR Products GmbH.