# Lenovo V330/V130 User Guide

Read the safety notices and important tips in the included manuals before using your computer.

**Notes**

- Before using the product, be sure to read Lenovo *Safety and General Information Guide* first.
- The latest electronic compliance and environmental information are available from the Lenovo compliance information Web sites.
  - To view compliance information go to: http://www.lenovo.com/compliance
  - To download environmental information go to: http://www.lenovo.com/ecodeclaration
- Some instructions in this guide may assume that you are using Windows® 7 or Windows 10. If you are using another Windows operating system, some operations may be slightly different. If you are using other operating systems, some operations may not apply to you.
- The features described in this guide are common to most models. Some features may not be available on your computer or your computer may include features that are not described in this user guide.
- The illustrations used in this manual are for Lenovo V330-15IKB unless otherwise stated.
- The illustrations in this manual may differ from the actual product. Please refer to the actual product.
- When the computer is in battery mode, the Type-C and USB ports support only docking devices with power supply.

**Regulatory Notice**

- For details, refer to **Guides & Manuals** at http://support.lenovo.com.

**First Edition (September 2017)**

**© Copyright Lenovo 2017.**

LIMITED AND RESTRICTED RIGHTS NOTICE: If data or software is delivered pursuant to a General Services Administration “GSA” contract, use, reproduction, or disclosure is subject to restrictions set forth in Contract No. GS-35F-05925.

# Lenovo

## User Guide

Instructions and technical information in this manual are applicable to the following Lenovo notebook computers unless otherwise stated.

| Model name | MT |
|---|---|
| Lenovo V330-15ISK | 81AW |
| Lenovo V330-15IKB | 81AX |
| Lenovo V130-15IGM | 81HL |
| Lenovo V130-15IKB | 81HN |

# Contents

**Chapter 1. Getting to know your computer ..... 1**
Top view ..... 1
Left-side view ..... 6
Right-side view ..... 10
Bottom view ..... 13
**Chapter 2. Starting to use Windows ..... 14**
Configuring the operating system for the first time ..... 14
Power-saving modes ..... 14
Connecting to a wireless network ..... 16
Help and support ..... 16
Operating system interface (for the Windows 10 operating system) ..... 17
Task and desktop management (for the Windows 10 operating system) ..... 19
**Chapter 3. Recovery system ..... 20**
Lenovo OneKey Recovery System ..... 20
Reset this PC ..... 21
**Chapter 4. Troubleshooting ..... 22**
Frequently asked questions ..... 22
Troubleshooting ..... 25
**Appendix A. CRU instructions ..... 29**
Replacing the removable module (on select models) ..... 29
**Trademarks ..... 31**

# Chapter 1. Getting to know your computer

## Top view

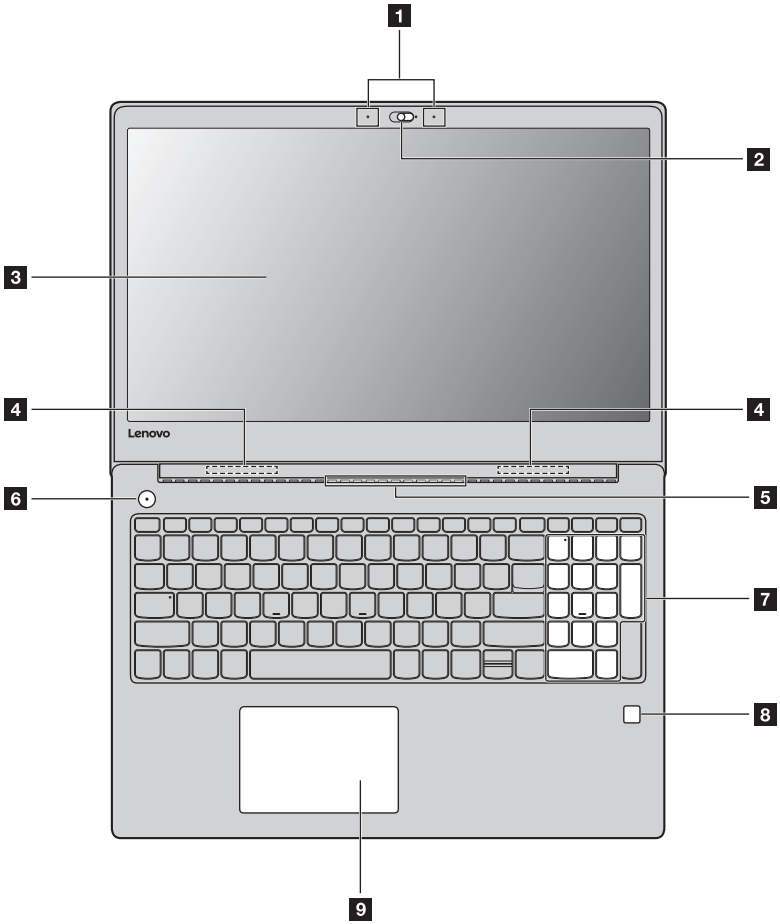


**Note:** The dashed areas indicate parts that are not visible externally.

**Attention:**

- Do *not* open the display panel beyond 180 degrees. When closing the display panel, be careful *not* to leave pens or any other objects in between the display panel and the keyboard. Otherwise, the display panel may be damaged.

| | | |
|---|---|---|
| 1 | **Built-in microphone (on select models)** | Captures sound which can be used for video conferencing, voice narration, or audio recording. |
| 2 | **Integrated camera (on select models)** | Use the camera for video communication or taking photos. |

**Note:** You can slide the camera cover to enable or disable the camera.

| | | |
|---|---|---|
| 3 | **Computer display** | The computer display with LED backlight provides brilliant visual output. |
| 4 | **Wireless LAN antennas** | Connect to a wireless LAN adapter to send and receive wireless radio signals. |
| 5 | **Ventilation slots** | Dissipate internal heat. |

**Note:** Make sure that the ventilation slots are not blocked or else the computer may overheat.

| | | |
|---|---|---|
| 6 | **Power button** | Press this button to turn on the computer. |
| 7 | **Numeric keypad** | For details, see "Using the keyboard" on page 3. |
| 8 | **Fingerprint reader (on select models)** | Registers fingerprints that can be used as passwords to secure your computer. |
| 9 | **Touchpad** | The touchpad functions as a conventional mouse.<br>**One piece multi-touch ClickPad:** To move the pointer on the screen, slide your fingertip over the pad in the direction in which you want the pointer to move.<br>**Left-click area:** Clicking in this area corresponds to the functions of clicking the left button on a conventional mouse.<br>**Right-click area:** Clicking in this area corresponds to the functions of clicking the right button on a conventional mouse. |

**Note:** You can enable/disable the touchpad by pressing **F6** ( ).

## Using the keyboard

### Numeric keypad

The keyboard has a separate numeric keypad. To enable or disable the numeric keypad, press the **Num Lock** key.

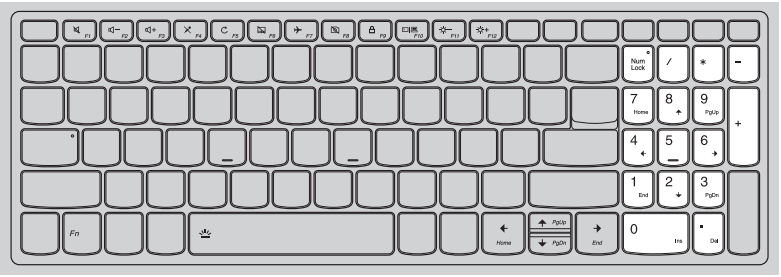

### Function key combinations

Through the use of the function keys, you can change operational features instantly. To use this function, press and hold **Fn** **1**; then press one of the function keys **2**.

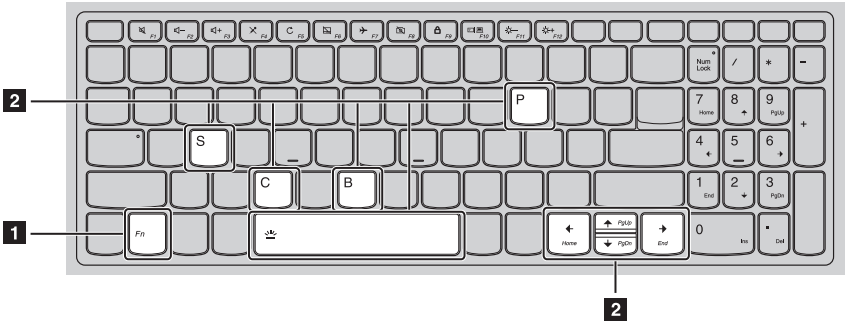


The following describes the features of each function key.

| | |
|---|---|
| **Fn + B:** | Activates the break function. |
| **Fn + P:** | Activates the pause function. |
| **Fn + C:** | Enables/disables the scroll lock. |
| **Fn + S:** | Activates the system request. |
| **Fn + ↑:** | Activates the Pgup key function. |
| **Fn + ↓:** | Activates the Pgdn key function. |
| **Fn + ←:** | Activates the home key function. |
| **Fn + →:** | Activates the end key function. |
| **Fn + Space (on select models):** | Adjusts the keyboard backlight (off → dim → bright → off). |

## Hotkeys

You can access certain system settings quickly by pressing the appropriate hotkeys.

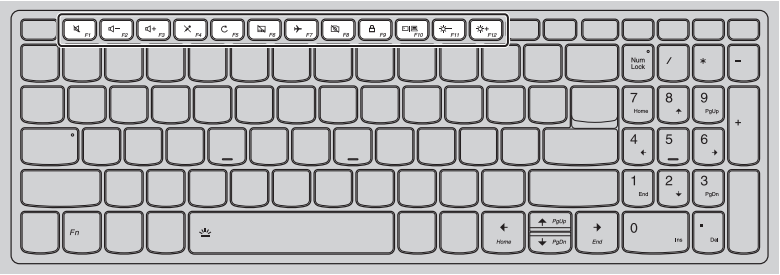

| | | | | | |
|---|---|---|---|---|---|
| F1 | : | Mutes/unmutes the sound. | F7 | : | Enables/disables Airplane mode. |
| F2 | : | Decreases the volume level. | F8 | : | Enables/disables the integrated camera (on select models). |
| F3 | : | Increases the volume level. | F9 | : | Locks the screen. |
| F4 | : | Enables/disables the microphone (on select models). | F10 | : | Toggles the display between the computer and an external display device. |
| F5 | : | Refreshes the desktop or the currently active window. | F11 | : | Decreases the display brightness. |
| F6 | : | Enables/disables the touchpad. | F12 | : | Increases the display brightness. |

## Setting hotkey mode

By default, the hotkey functions are accessible by pressing the appropriate hotkey. However, you can disable the hotkey mode in the BIOS setup utility.
To disable the hotkey mode:

1. Shut down the computer.
2. Press the Novo button and then select **BIOS Setup**.
3. In the BIOS setup utility, open the **Configuration** menu, and change the setting of **HotKey Mode** from **Enabled** to **Disabled**.
4. Open the **Exit** menu, and select **Exit Saving Changes**.

**Note:** When hotkey mode is disabled, press the **Fn** key and the appropriate hotkey to access the corresponding hotkey function.

## Left-side view

### Lenovo V330-15ISK/Lenovo V330-15IKB/Lenovo V130-15IKB

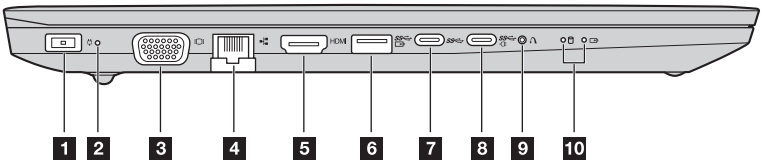


### Lenovo V130-15IGM

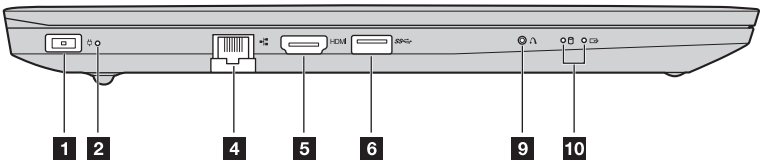


**1 AC power adapter jack** Connect the AC power adapter here.

**2 Power status indicator**

| Indicator | Indicator status | Meaning |
|---|---|---|
| Power status indicator | On (solid white) | Connect the AC power adapter (plugged into a working electrical outlet) to the computer. |
| | Off | Disconnect the AC power adapter from the computer. |

**3 VGA port (on select models)** Connects to external display devices.

**4 RJ-45 port** Connects the computer to an Ethernet network.

**5 HDMI port** Connects to devices with HDMI input such as a TV or an external display.

**6 USB 3.0 port** Connects to USB devices.

**Notes:**
- Select models support AOU (always on USB) function.
- For details, see "Connecting USB device" on page 8.

**7 Type-C port (on select models)** Type-C port is compatible with:
- USB 3.1

**Note:** This USB Type-C connector does not support connecting expansion docks or port replicators.

**8 Type-C port (on select models)**

Type-C port is compatible with:
- USB 3.1
- PowerDelivery
- DisplayPort output
- Docking

**Notes:**
- You may need to install separate device drivers when connecting expansion docks or port replicators using this connector. Read the device's documentation before connecting it to the computer.
- When the computer is in DC mode, the Type-C port supports USB 3.0 only.

**9 Novo button**

When the computer is off, press this button to start the recovery system or the BIOS setup utility, or to enter the boot menu.

**Notes:**
- You can use the tip of an unfolded paper clip (or similar object without a sharp tip) to gently press the Novo button.
- For details, see "Recovery system" on page 20.

**10 System status indicators**

| Symbol | Indicator | AC power adapter status | Indicator status | Meaning |
|---|---|---|---|---|
|  | Battery status indicator | Disconnected | Off | The computer is in sleep mode or turned off; The battery has more than 20% charge. |
| | | | Solid amber | The battery has between 5% and 20% charge. |
| | | | Fast blinking amber | The battery has between 1% and 5% charge. |
| | | Connected | Slow blinking amber | The battery is being charged. When battery charge reaches 20%, the blinking color changes to white. |
| | | | Slow blinking white | The battery has between 20% and 80% charge and is still charging. When the battery reaches 80% charge the light will stop blinking. |
| | | | Solid white | The battery has more than 80% charge, charging will continue until the battery is fully charged. |
| | Hard disk drive | --- | Blinking | The hard disk drive is reading or writing data. |

## Connecting USB device

You can connect a USB device to your computer by inserting its USB plug (Type A) into the USB port on your computer.

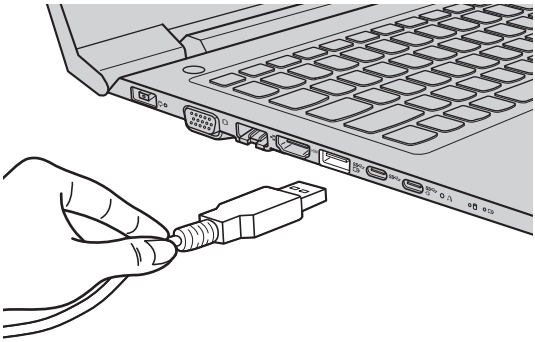

The first time you plug a USB device into a particular USB port on your computer, Windows automatically installs a driver for that device. After the driver has been installed, you can disconnect and reconnect the device without performing any additional steps.

**Note:** Typically, Windows detects a new device after it has been connected, and then installs the driver automatically. However, some devices may require you to install the driver before connecting. Check the documentation provided by the device's manufacturer before connecting the device.

Before disconnecting a USB storage device, make sure your computer has finished transferring data to that device. Click the **Safely Remove Hardware and Eject Media** icon in the Windows notification area to remove the device before disconnecting.

**Note:** If your USB device uses a power cord, connect the device to a power source before connecting it. Otherwise, the device may not be recognized.

## Connecting network cables

To insert a network cable, do the following:

1. Hold one connector of the network cable to press the RJ-45 cover down gently **1**.
2. Insert the connector into the RJ-45 port **2**.

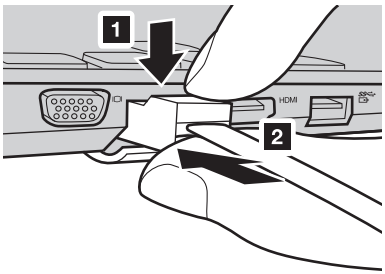


### Software configuration

Consult your Internet Service Provider (ISP) for details on how to configure your computer.

## Right-side view

### Lenovo V330-15ISK/Lenovo V330-15IKB/Lenovo V130-15IKB

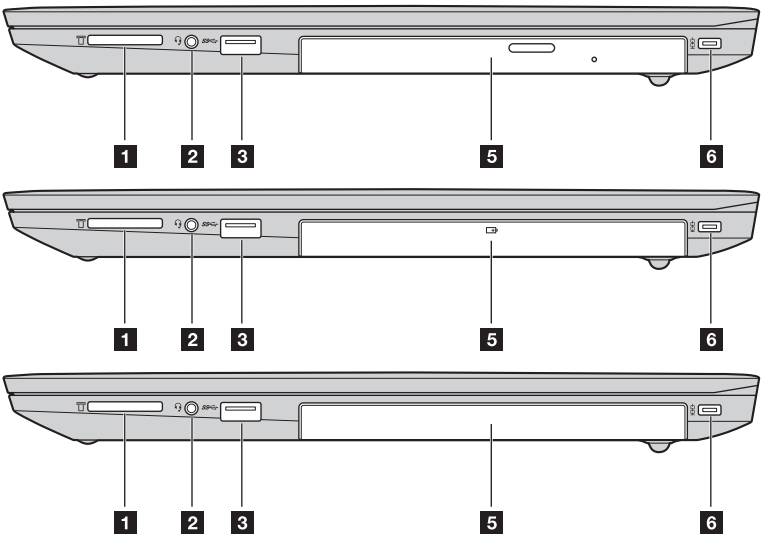


### Lenovo V130-15IGM

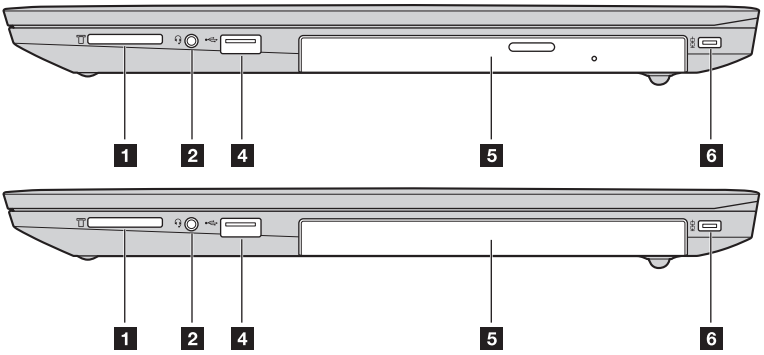

| | | |
|---|---|---|
| 1 | **Memory card slot** | Accepts memory cards (not supplied). |

**Note:** For details, see “Using memory cards (not supplied)” on page 12.

| | | |
|---|---|---|
| 2 | **Combo audio jack** | Connects to headsets. |

**Notes:**
- The combo audio jack does not support conventional microphones.
- The recording function might not be supported if third-party headphones or headsets are connected, due to different industry standards.

| | | |
|---|---|---|
| 3 | **USB 3.0 port** | Connects to USB devices. |

**Note:** For details, see “Connecting USB device” on page 8.

| | | |
|---|---|---|
| 4 | **USB 2.0 port** | Connects to USB devices. |

**Note:** For details, see “Connecting USB device” on page 8.

| | | |
|---|---|---|
| 5 | **Optical disk drive (on select models)** | Reads/Burns optical discs. |
| | **Removable battery (on select models)** | Provides system power. |
| | **Dummy case (on select models)** | |

**Note:** Some models are supplied with an optical disk drive or a removable battery as an optional module. You can replace the optional module by yourself. Insert only one optional module in the module compartment at a time.

| | | |
|---|---|---|
| 6 | **Kensington mini security slot** | For attaching a Kensington MiniSaver™ Mobile (or compatible) lock. |

**Note:** Lock is not supplied. When purchasing a lock, choose one that utilizes the Cleat™ locking mechanism and verify its compatibility with the slot before purchase. A lock utilizing the T-Bar™ locking mechanism is not compatible with the Kensington mini security slot.

## Using memory cards (not supplied)

Your computer supports the following types of memory cards:

- Secure Digital (SD) card
- Secure Digital High Capacity (SDHC) card
- Secure Digital eXtended Capacity (SDXC) card
- MultiMediaCard (MMC)

**Notes:**
- Insert *only* one card in the slot at a time.
- This card reader does not support SDIO devices (e.g., SDIO Bluetooth, etc.).

### Inserting a memory card

Insert the memory card until it touches the bottom of the slot.

### Removing a memory card

Gently pull the memory card out of the memory card slot.

**Note:** Before removing the memory card, disable it by using the Windows safely remove hardware and eject media utility to avoid data corruption.

## Bottom view

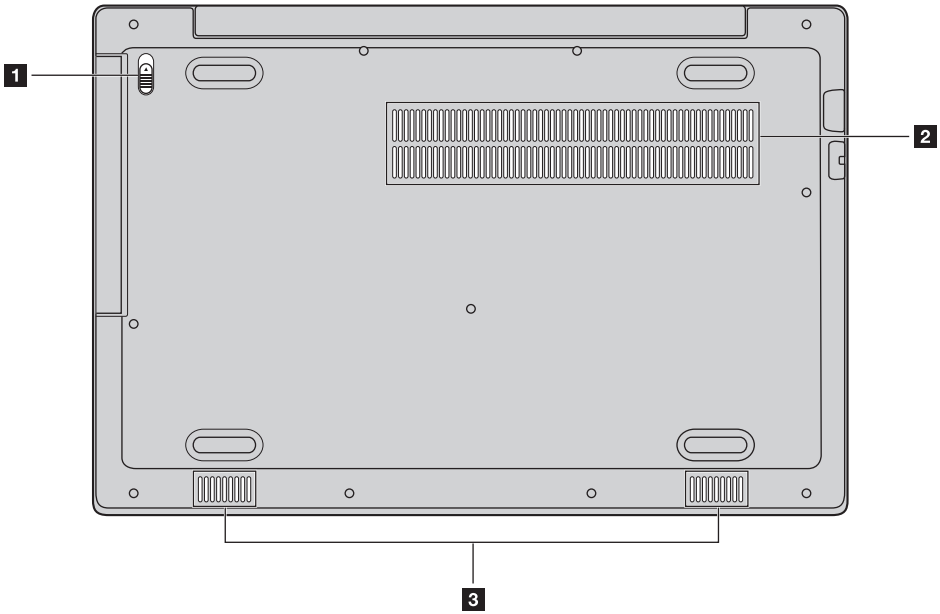


| | | |
|---|---|---|
| 1 | **Optical disk drive/ removable battery latch (on select models)** | The spring-loaded latch keeps the optical disk drive/removable battery secured in place. |
| 2 | **Louvers** | Allow air to enter the computer for cooling. |

**Note:** To reduce the possibility of heat-related injuries or of overheating the computer, do not place the computer directly on your lap or obstruct the computer air vents.

| | | |
|---|---|---|
| 3 | **Speakers** | Provide audio output. |

# Chapter 2. Starting to use Windows

**Note:** Windows® 10 has an updated version. If you are using the updated version, some operations may be different. Please refer to the actual product.

## Configuring the operating system for the first time

You may need to configure the operating system when it is first used.
The configuration process may include the procedures below:

- Accepting the end user license agreement
- Configuring the Internet connection
- Registering the operating system
- Creating a user account

## Power-saving modes

When you have finished working with your computer, you can set it to sleep or shut it down.

### Putting your computer to sleep

If you will be away from your computer for only a short time, put the computer to sleep. When the computer is in sleep mode, you can quickly wake it to resume use, bypassing the startup process.
To put the computer to sleep, do one of the following:

- Close the display lid.
- Press the Power button.
- Do the proper operations in the operating system.

  **Windows 7:**
  Click **Start** → **Sleep**.
  **Windows 10:**
  Open the start menu, and then select **Power** → **Sleep**.

**Note:** Wait until the power button indicator light starts blinking (indicating that the computer is in sleep mode) before you move your computer. Moving your computer while the hard disk is spinning can damage the hard disk, causing loss of data.

To wake the computer, do one of the following:

- Press any key on the keyboard.
- Press the Power button.

## Shutting down the computer

If you are not going to use your computer for a long time, shut it down.
To shut down the computer, do one of the following:

- **Windows 7:**
  Click **Start** → **Shut down**.
- **Windows 10:**
  - Open the start menu, and then select **Power** → **Shut down**.

  - Right-click the **Start** button in the lower-left corner and select **Shut down or sign out** → **Shut down**.

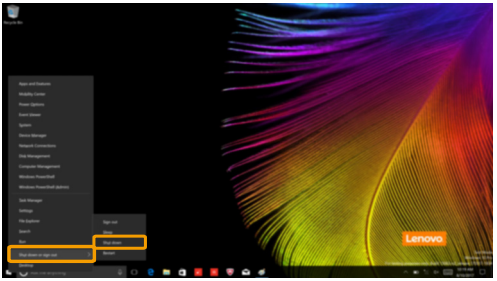

## Connecting to a wireless network

### Enabling wireless connection

To enable/disable wireless functions, do one of the following:

- **Windows 10:** Press **F7** ( ) to enable/disable airplane mode.

### Connecting to a wireless network

To connect to a wireless network, do the following:

1. Press **F7** ( ) to turn on the wireless feature.
2. View the available wireless networks. Click the wireless network connection status icon in the Windows notification area. A list of available wireless networks will be displayed.
3. Click a network name in the list, and then click **Connect**.

**Note:** Some networks require a network security key or passphrase for connection. To connect to one of those networks, ask the network administrator or the Internet service provider (ISP) for the security key or passphrase.

## Help and support

If you have a problem with the operating system, see the Windows Help and Support file. To open the Windows Help and Support file, do the following:

- **Windows 7:**
  Click **Start** → **Help and Support**.

You can read the Windows Help and Support file on your computer. You can also get online help and support by clicking on one of the two links listed under **More to explore**.

## Operating system interface (for the Windows 10 operating system)

Windows 10 comes with a powerful and useful start menu.
To open the start menu, do one of the following:

- Press the Windows key on the keyboard.
- Select **Start** on the lower-left corner of the desktop.

1. **Settings button**
2. **Power button**
3. **Start button**
4. **Search box**
5. **Task view button**

## Settings

**Settings** lets you perform basic tasks. You can also search for more settings with the settings search box in the upper-right corner.
To open the settings, do the following:

- Open the start menu, and then select **Settings** .

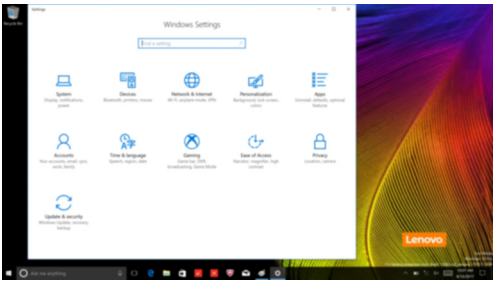


## Personalize the start menu

You can personalize the start menu with your favorite apps.
To personalize the start menu, do the following:

1. Open the start menu and find the apps list on the left.
2. Right click the app you want to add to the start menu, and then select **Pin to Start**.

**Note:** You can also drag apps from the apps list to add them to the start menu.

## Task and desktop management (for the Windows 10 operating system)

### Task view

To open the task view, do one of the following:

- Select the Task view button on the task bar.
- Press the Windows key + Tab.

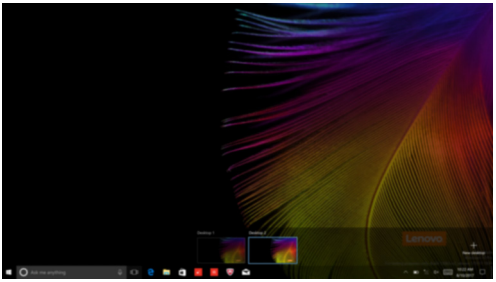

### Virtual desktop management

Windows 10 supports the ability to create, manage and switch between virtual desktops.
To create a new virtual desktop, do one of the following:

- Open the task view, and then select **New desktop**.
- Press the Windows key + Ctrl + D.

To switch between different desktops, do one of the following:

- Open the task view and select the desktop you want active.
- Press the Windows key + Ctrl + ← / → to scroll through the desktops you've created.

# Chapter 3. Recovery system

**Notes:**
- If your computer is preinstalled with Windows 7, see “Lenovo OneKey Recovery System” on page 20.
- If your computer is preinstalled with Windows 10, see “Reset this PC” on page 21.

## Lenovo OneKey Recovery System

The Lenovo OneKey Recovery System is software designed to back up and restore your computer. You can use it to restore the system partition to its original status in case of a system failure. You can also create user backups for easy restoration as required.

**Notes:**
- If your computer is preinstalled with a GNU/Linux operating system, OneKey Recovery System is not available.
- To utilize the features of the OneKey Recovery System, your hard disk already includes a hidden partition by default to store the system image file and the OneKey Recovery System program files. This default partition is hidden for security reasons, which explains why the available disk space is less than the stated capacity.

### Backing up the system partition

You can back up the system partition to an image file. This image file can be used to restore the system partition. To back up the system partition:

1. In Windows, press the Novo button or double-click OneKey Recovery icon to start the Lenovo OneKey Recovery System.
2. Click **System Backup**.
3. Select a back-up location and click **Next** to start the backup.

**Notes:**
- You can choose a back-up location on the local hard disk drive or an external storage device.
- Remove the removable hard disk drive before starting the Lenovo OneKey Recovery System. Otherwise, data from the removable hard disk drive might be lost.
- The back-up process may take a while.
- The back-up process is only available when Windows can be started normally.

### Restoring

You can choose to restore the system partition to its original status or to a previously created back-up point. To restore the system partition:

1. In Windows, press the Novo button or double-click OneKey Recovery icon to start the Lenovo OneKey Recovery System.
2. Click **System Recovery**. The computer will restart to the recovery environment.
3. Follow the on-screen instructions to restore the system partition to its original status or to a previously created back-up point.

**Notes:**
- The recovery process is irreversible. Make sure to back up any data you wish to save on the system partition before starting the recovery process.
- The recovery process may take a while. So be sure to connect the AC power adapter to your computer during the recovery process.
- The above instructions should be followed when Windows can be started normally.

If Windows cannot be started, then follow the steps below to start the Lenovo OneKey Recovery System:

1. Shut down the computer.
2. Press the Novo button. From **Novo Button Menu**, select **System Recovery** and press Enter.

## Reset this PC

### Introduction

**Reset this PC** is a built-in recovery tool that enables users to restore their operating system to its original state. This preserves their data and important customizations, without the need to back up their data in advance.
The following **Reset this PC** features are available to users from multiple locations within Windows:

#### Keep my files

Fixes software problems by reinstalling the factory default configuration. This preserves personal files, and deletes apps and settings.

#### Remove everything

Prepares the computer for recycling or transfer of ownership. This reinstalls the factory default configuration and returns all user data and applications to the state of their original Out-of-Box Experience (OOBE).

### Using Reset this PC

**Reset this PC** can be launched using one of the following methods:

- Novo Menu:
  - Shut down the computer and wait at least five seconds. Press the Novo button to open the Novo Menu, then select **System Recovery** → **Troubleshoot** → **Reset this PC**.
- Windows PC settings:
  - Windows PC settings → **Update & security** → **Recovery** → **Reset this PC** → select **Get started**.

For more instructions, see the Windows Help and Support file on your computer.

# Chapter 4. Troubleshooting

## Frequently asked questions

This section lists frequently asked questions by category.

### Finding information

**What safety precautions should I follow when using my computer?**

Read and follow all safety precautions included in Lenovo *Safety and General Information Guide*.

> **Note:** To view Lenovo *Safety and General Information Guide*, select the **Companion** (or **Lenovo PC Manager**) icon on the taskbar. You can also download it from the Lenovo Support Web site.

**What is the address of the Lenovo support Web site?**

http://support.lenovo.com

**Where can I find warranty information?**

Visit the Lenovo Support Web site and type the serial number for your computer to look up warranty information.

### Lenovo preinstalled operating system and software

**What is the Lenovo preinstalled operating system?**

Some Lenovo computers come with copies of the operating system installed at factory. Lenovo provides computers with a preinstalled operating system for your convenience. If you purchased such a computer, you can use your computer out of the box and do not need to install a separate operating system.

**What is Lenovo preinstalled software?**

This is software (developed by Lenovo or other software vendors) installed and licensed at the factory for your convenience. The license for some preinstalled software may be for trial versions. When the trial period expires, you may need to purchase a license if you want to continue to use the software.

> **Note:** If a license agreement is displayed when you first start the software, read the agreement carefully. If you don't accept the terms of the agreement, do not use the software.

**When I purchased my computer, it included a copy of Windows. How can I determine whether the copy of Windows is preinstalled by Lenovo?**

On the outside of the sales package of your computer, you should find a label containing configuration information for your computer. Check the printed string next to **OS**. If it contains **Windows** or **WIN**, the copy of Windows was preinstalled by Lenovo.

**I uninstalled a preinstalled software, but there is no significant increase in the free drive space.**

The copy of Windows running on your computer may be Compact-enabled. For computers with Compact-enabled Windows, the majority of files needed for preinstalled software are installed on the Recovery Partition and won't be deleted through normal uninstallation.

**How can I determine whether the Windows running on my computer is Compact enabled?**

Compact technology is normally enabled on copies of Windows 10 Update running on SSD (or eMMC) -only computer models. To check your computer,

1. Right-click the Start button in the lower-left corner and select **Disk Management**.
2. The Disk Management program starts.

If **Compact** is labeled on the Windows partition, Compact is enabled on your copy of Windows.

**Where can I find drivers for the various hardware devices of my computer?**

If your computer is preinstalled with a Windows operating system, first check the installation program on the C partition of your hard disk (for select models, on the D partition). If you cannot find the drivers for all the hardware devices that you need there, download the drivers from the Lenovo consumer support website.

**Note:** The Lenovo support Web site contains the latest drivers.

## BIOS setup utility

**What is the BIOS setup utility?**

The BIOS setup utility is ROM-based software. It communicates basic computer information and provides options for setting boot devices, security, hardware mode, and other preferences.

**How can I start the BIOS setup utility?**

To start the BIOS setup utility:

1. Shut down the computer.
2. Press the Novo button and then select **BIOS Setup**.

**How can I change the boot mode? (on select models)**

There are two boot modes: **UEFI** and **Legacy Support**. To change the boot mode, start the BIOS setup utility and set boot mode to **UEFI** or **Legacy Support** on the boot menu.

**When do I need to change the boot mode? (on select models)**

The default boot mode for your computer is **UEFI** mode. If you need to install a legacy Windows operating system on your computer, you must change the boot mode to **Legacy Support**. The legacy Windows operating system cannot be installed if you don't change the boot mode.

## Always-on power

**What is always-on power?**

If a connector on your Lenovo computer is labeled with an “always-on” icon, the connector is able to provide power to connected devices when the computer is powered off, in sleep or hibernation mode. This feature can be enabled or disabled in the BIOS setup utility.

**Note:** If the computer is not connected to ac power and the remaining battery power is very low, the “always-on” connector stops providing power to connected external devices.

**How to enable/disable always-on?**

For some Lenovo computers with always-on connectors, the always-on function can be enabled/disabled in BIOS setup utility.
Start the BIOS setup utility.
In BIOS setup utility, select **Configuration** → **Always On USB** and press Enter; change the setting to **Disabled** or **Enabled**.
Select **Exit** → **Exit saving changes**.

## Getting help

**How can I contact the customer support center?**

See "Chapter 3. Getting help and service" of Lenovo *Safety and General Information Guide*.

## Troubleshooting

### Display problems

When I turn on the computer, nothing appears on the screen.

- If the screen is blank, make sure that:
  - The AC power adapter is connected to the computer, and the power cord is plugged into a working electrical outlet.
  - The computer power is on. (Press the Power button again for confirmation.)
- If these items are properly set, and the screen remains blank, have the computer serviced.

When I turn on the computer, only a white cursor appears on a blank screen.

- Restore backed-up files to your Windows environment or the entire contents of your hard disk to its original factory contents using the recovery system. If you still see only the cursor on the screen, have the computer serviced.

The screen goes blank while the computer is on.

- Your screen saver or power management may be enabled. Do one of the following to exit from the screen saver or to resume from sleep mode:
  - Touch the touchpad.
  - Press any key on the keyboard.
  - Press the Power button.

### BIOS password problems

I forgot my password.

- If you forget your user password, ask the system administrator to clear your user password.
- If you forget your hard disk drive password, a Lenovo authorized servicer cannot reset your password or recover data from the hard disk. You must take your computer to a Lenovo authorized servicer or a marketing representative to have the hard disk drive replaced. Proof of purchase is required, and a fee will be charged for parts and service.
- If you forget your administrator password, a Lenovo authorized servicer cannot reset your password. You must take your computer to a Lenovo authorized servicer or a marketing representative to have the system board replaced. Proof of purchase is required, and a fee will be charged for parts and service.

## Sleep problems

| | |
|---|---|
| The critical low-battery error message appears, and the computer immediately turns off. | • The battery power is getting low. Connect the AC power adapter to the computer. |
| The computer enters sleep mode immediately after Power-on self-test (POST). | • Make sure that:<br>- The battery pack is charged.<br>- The operating temperature is within the acceptable range. See "Chapter 2. Use and care Information" in the Lenovo *Safety and General Information Guide*. |

**Note:** If the battery pack is charged and the temperature is within range, have the computer serviced.

| | |
|---|---|
| The computer does not return from sleep mode, and the computer does not work. | • If your computer is in sleep mode, connect the AC power adapter to the computer, then press any key or the Power button.<br>• If the system still does not return from sleep mode, stops responding, or cannot be turned off, reset the computer. Unsaved data may be lost. To reset the computer, press and hold the Power button for four seconds or more. If the computer is still not reset, remove the AC power adapter. |

## Display panel problems

| | |
|---|---|
| The screen is blank. | • Do the following:<br>- If you are using the AC power adapter or the battery pack, and the battery status indicator is on, press **F12** ( ) to make the screen brighter.<br>- If the power indicator is blinking, press the Power button to resume from sleep mode.<br>- If the problem persists, follow the solution in the next problem "The screen is unreadable or distorted." |
| The screen is unreadable or distorted. | • Make sure that:<br>- The display device driver is installed correctly.<br>- The screen resolution and color quality are correctly set.<br>- The monitor type is correct. |
| Incorrect characters appear on the screen. | • Is the operating system or programs installed correctly? If they are installed and configured correctly, have the computer serviced. |

## Sound problems

| | |
|---|---|
| No sound can be heard from the speakers even when the volume is turned up. | • Make sure that:<br>- The Mute function is off.<br>- The combo audio jack is not being used.<br>- Speakers are selected as the playback device. |

## Battery pack problems

| | |
|---|---|
| Your computer shuts down before the battery status indicator shows empty.<br>*-or-*<br>Your computer operates after the battery status indicator shows empty. | • Discharge and recharge the battery pack. |

## A hard disk drive problem

| | |
|---|---|
| The hard disk drive does not work. | • Make sure that the hard disk drive is included in the **Boot** menu in the BIOS setup utility correctly. |

## Other problems

| | |
|---|---|
| Your computer does not respond. | • To turn off your computer, press and hold the Power button for four seconds or more. If the computer still does not respond, remove the AC power adapter.<br>• Your computer might lock when it enters sleep mode during a communication operation. Disable the sleep timer when you are working on the network. |
| The computer does not start from a device you want. | • See the **Boot** menu of the BIOS setup utility. Make sure that the BIOS setup utility is set so that the computer starts from the device you want.<br>• Also make sure that the device from which the computer starts is enabled. Make sure that the device is included in the **Boot** menu in the BIOS setup utility correctly.<br>• While turned off, press the Novo button to select the device you want the computer to start from. |
| The connected external device does not work. | • Do *not* connect or disconnect any external device cables other than USB while the computer power is on. Otherwise, you might damage your computer.<br>• When using high power consumption external devices such as an external USB optical disk drive, use an external device power adapter. Otherwise, the device may not be recognized, or the system may shut down as a result. |

# Appendix A. CRU instructions

Customer Replaceable Units (CRUs) are parts that can be upgraded or replaced by the customer. If a CRU is determined to be defective during the warranty period, a replacement CRU will be provided to the customer. Customers are responsible for installing the self-service CRUs for this product. Customers also can install optional-service CRUs, which might require some technical skills or tools, or request that a technician install the optional-service CRU under the terms of the applicable warranty service type for your country or region.

**Notes:**
- The illustrations in this manual might differ from the actual product. Please refer to the actual product.
- The CRU service is only applicable to certain countries.

## Replacing the removable module (on select models)

**Note:** For example purposes, this section describes the replacement of the optical disk drive module.

### Supplied with an optical disk drive and a removable battery

To remove the removable module, do the following:

1. Turn off the computer. Disconnect the AC power adapter and all cables from the computer.
2. Close the computer display, and then turn the computer over.
3. Hold the spring-loaded latch in the unlocked position **1**.
4. Gently pull the removable module out **2**.

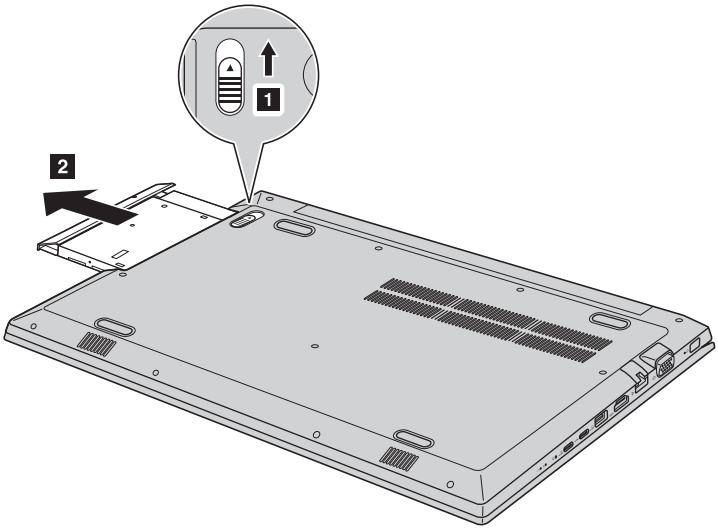

❺ Remove the screw **3**, then remove the latch catch in the direction shown by arrow **4**.

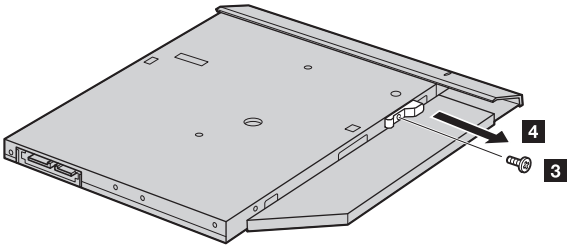


❻ Carefully remove the removable module bezel in the direction shown by arrow **5**.

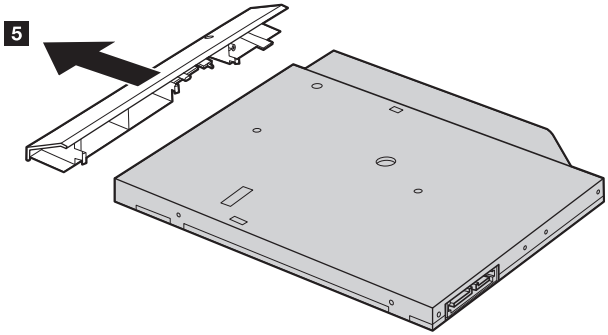


The following table provides a list of CRUs (Customer Replaceable Units) for your computer and informs you of where to find replacement instructions.

**Self-service CRUs**

| | Setup Guide | User Guide |
|---|---|---|
| AC power adapter | O | |
| Power cord for AC power adapter | O | |
| Optical disk drive (on select models) | | O |
| Removable battery (on select models) | | O |

# Trademarks

The following terms are trademarks or registered trademarks of Lenovo in the United States, other countries, or both.

Lenovo
OneKey

Microsoft and Windows are trademarks of Microsoft Corporation in the United States, other countries, or both.

Other company, products, or service names may be trademarks or service marks of others.

©Lenovo China 2017

en-US
Rev. RP02