BENQ PD2730S
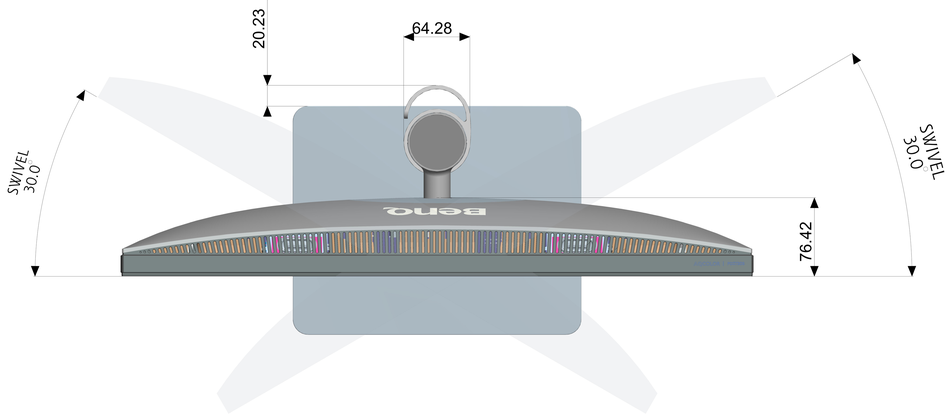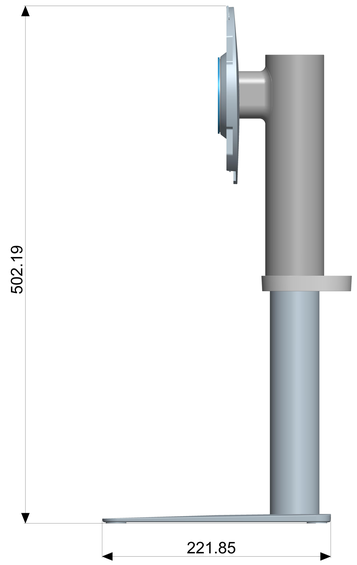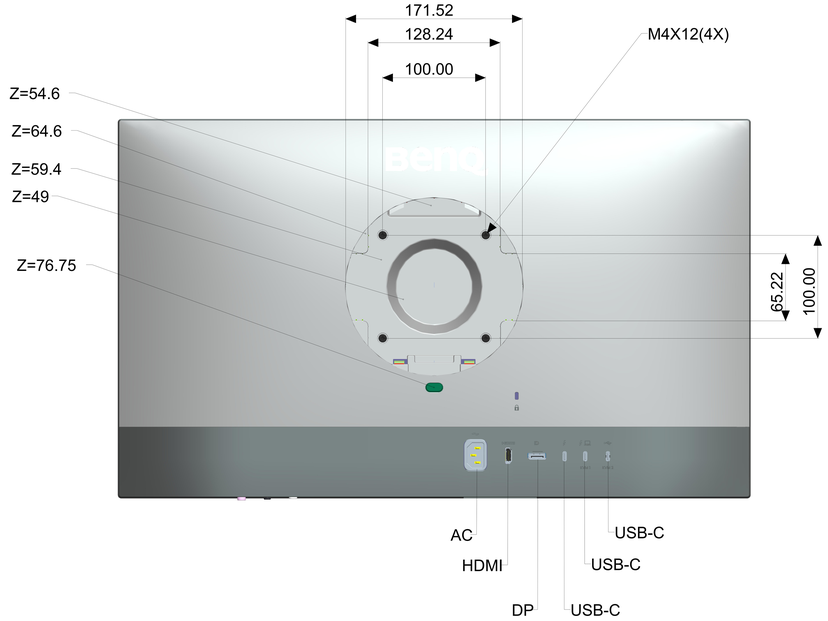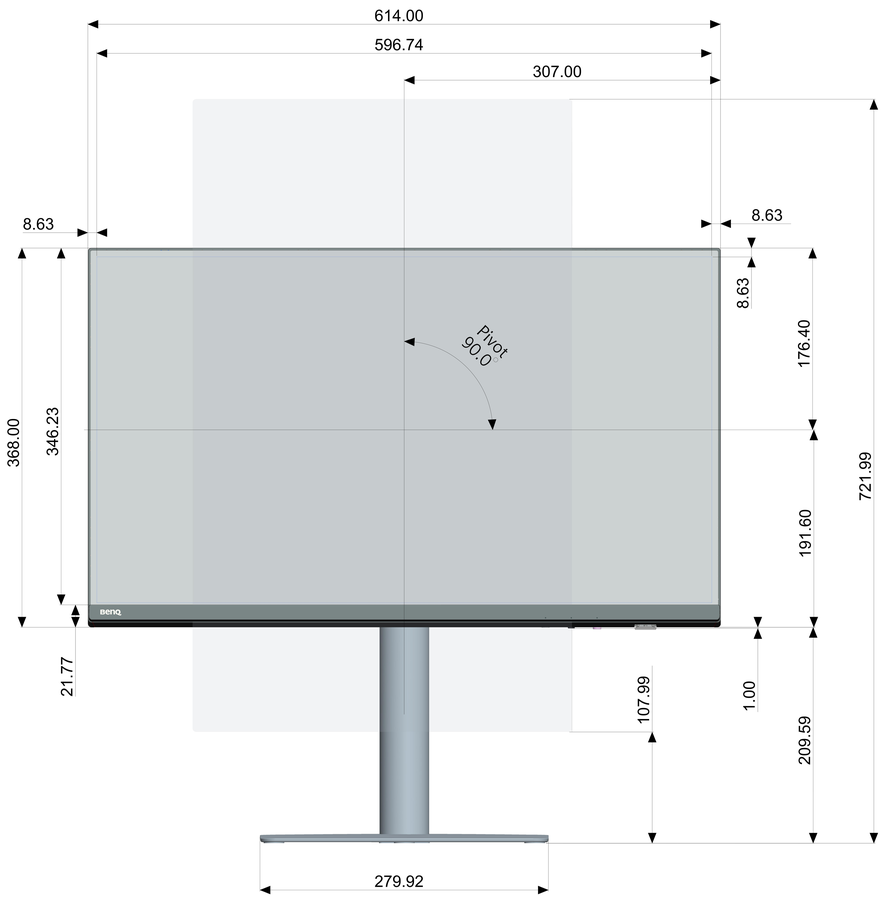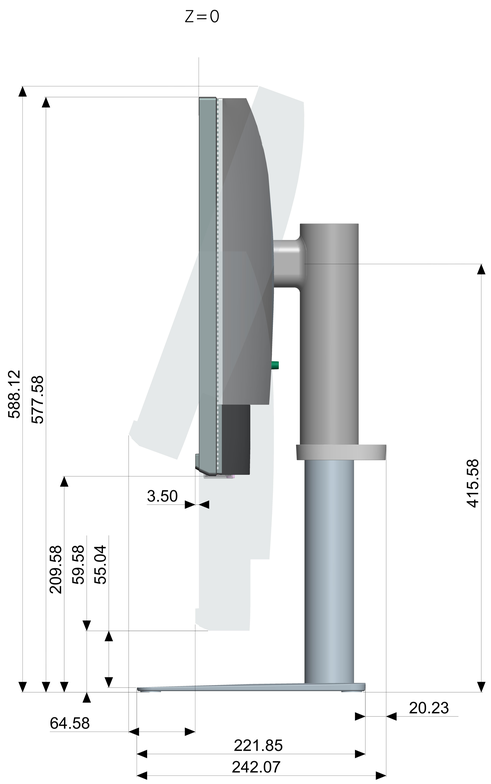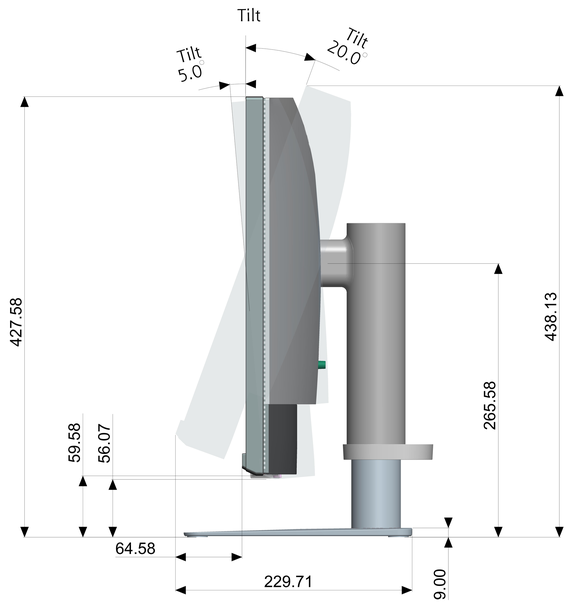
Unit : mm
Dimension : Normal
Drawing : Not to Scale