Q87WSA-DL
Q87WS-DL
H87WSA-DL
H87WS-DL

User Manual

Version 1.0
Published August 2013
Copyright©2013 ASRock INC. All rights reserved.

Copyright Notice:

No part of this manual may be reproduced, transcribed, transmitted, or translated in any language, in any form or by any means, except duplication of documentation by the purchaser for backup purpose, without written consent of ASRock Inc.
Products and corporate names appearing in this manual may or may not be registered trademarks or copyrights of their respective companies, and are used only for identification or explanation and to the owners' benefit, without intent to infringe.

Disclaimer:

Specifications and information contained in this manual are furnished for informational use only and subject to change without notice, and should not be constructed as a commitment by ASRock. ASRock assumes no responsibility for any errors or omissions that may appear in this manual.
With respect to the contents of this manual, ASRock does not provide warranty of any kind, either expressed or implied, including but not limited to the implied warranties or conditions of merchantability or fitness for a particular purpose.
In no event shall ASRock, its directors, officers, employees, or agents be liable for any indirect, special, incidental, or consequential damages (including damages for loss of profits, loss of business, loss of data, interruption of business and the like), even if ASRock has been advised of the possibility of such damages arising from any defect or error in the manual or product.

This device complies with Part 15 of the FCC Rules. Operation is subject to the following two conditions:

(1) this device may not cause harmful interference, and
(2) this device must accept any interference received, including interference that may cause undesired operation.

CALIFORNIA, USA ONLY

The Lithium battery adopted on this motherboard contains Perchlorate, a toxic substance controlled in Perchlorate Best Management Practices (BMP) regulations passed by the California Legislature. When you discard the Lithium battery in California, USA, please follow the related regulations in advance.
"Perchlorate Material-special handling may apply, see
www.dtsc.ca.gov/hazardouswaste/perchlorate"

ASRock Website: http://www.asrock.com

Contents

1 Introduction 5

1.1 Package Contents 5
1.2 Specifications..... 6
1.3 Unique Features 9
1.4 Motherboard Layout..... 10
1.5 I/O Panel 11
1.6 Block Diagram 13

2 Installation 15

2.1 Screw Holes..... 15
2.2 Pre-installation Precautions 15
2.3 CPU Installation 16
2.4 Installation of Heatsink and CPU fan 19
2.5 Installation of Memory Modules (DIMM) 20
2.6 Expansion Slot (PCI and PCI Express Slot)..... 22
2.7 CrossFireX™ and Quad CrossFireX™ Operation Guide 23
2.8 Jumpers Setup 27
2.9 Onboard Headers and Connectors 28
2.10 Driver Installation Guide 34
2.11 Intel® vPro Configuration and Management 34
2.12 Teaming Function Operation Guide 35

3 UEFI SETUP UTILITY..... 37

3.1 Introduction 37
3.1.1 UEFI Menu Bar 37
3.1.2 Navigation Keys 38
3.2 Main Screen..... 38
3.3 OC Tweaker Screen 39
3.4 Advanced Screen..... 42
3.4.1 CPU Configuration 43
3.4.2 Chipset Configuration..... 45
3.4.3 Storage Configuration 47
3.4.4 Super IO Configuration 49
3.4.5 ACPI Configuration..... 50
3.4.6 USB Configuration 51
3.4.7 Serial Port Console Redirection 52
3.4.8 AMT Configuration 53
3.5 Tool 55
3.6 Hardware Health Event Monitoring Screen 56
3.7 Boot Screen 57
3.8 Security Screen 59

3.9 Exit Screen 60
3.10 Event Logs..... 61
4 Software Support 62
4.1 Install Operating System..... 62
4.2 Support CD Information 62
4.2.1 Running Support CD 62
4.2.2 Drivers Menu..... 62
4.2.3 Utilities Menu..... 62
4.2.4 Contact Information..... 62
5 Trouble Shooting..... 63
5.1 Troubleshooting Procedures..... 63
5.2 Technical Support Procedures..... 65
5.3 Returning Merchandise for Service 65

Chapter 1: Introduction

Thank you for purchasing ASRock ***Q87WSA-DL / Q87WS-DL / H87WSA-DL / H87WS-DL*** motherboard, a reliable motherboard produced under ASRock's consistently stringent quality control. It delivers excellent performance with robust design conforming to ASRock's commitment to quality and endurance.

In this manual, chapter 1 and 2 contains introduction of the motherboard and step-by-step guide to the hardware installation. Chapter 3 and 4 contains the configuration guide to BIOS setup and information of the Support CD.

Because the motherboard specifications and the BIOS software might be updated, the content of this manual will be subject to change without notice. In case any modifications of this manual occur, the updated version will be available on ASRock website without further notice. You may find the latest VGA cards and CPU support lists on ASRock website as well. ASRock website http://www.asrock.com

If you require technical support related to this motherboard, please visit our website for specific information about the model you are using.
www.asrock.com/support/index.asp

1.1 Package Contents

ASRock ***Q87WSA-DL / Q87WS-DL / H87WSA-DL / H87WS-DL*** Motherboard
(ATX Form Factor: 12.0-in x 9.6-in, 30.5 cm x 24.4 cm)

ASRock ***Q87WSA-DL / Q87WS-DL / H87WSA-DL / H87WS-DL*** User Manual

ASRock ***Q87WSA-DL / Q87WS-DL / H87WSA-DL / H87WS-DL*** Support CD

2 x Serial ATA (SATA) Data Cables (Optional)

1 x I/O Panel Shield

1.2 Specifications

Physical Status	Form Factor	ATX
	Dimension	12" x 9.6" (30.5 cm x 24.4 cm)
Processor System	CPU	Supports Intel® Haswell i7, i5, i3 processors * Intel® Xeon® E3-1200 v3 series processor support is an extended advantage provided by ASRock Rack. It is out of warranty, user's discretion is required.
	Socket	Single socket (LGA1150)
	Power Phase	4 power phase design
	Chipset	Q87WSA-DL / Q87WS-DL: Intel® Q87 Supports Intel® vPro™ Technology Supports Intel® Active Management Technology 9.0 H87WSA-DL / H87WS-DL: Intel® H87
BIOS	BIOS Type	64Mb AMI UEFI Legal BIOS
System Memory	Capacity	32GB DDR3 UDIMM
	Socket	4 x 240-pin DDR3 DIMM slots
	Type	Dual Channel DDR3 1600/1333 UDIMM
	Voltage	1.35V, 1.5V
Expansion Slot	PCIe 3.0 x 16	1 slot (PCIE6: x16 mode)
	PCIe 2.0 x 16	1 slot (PCIE3: x4 mode)
	PCI	2 slots
Storage	SATA Controller	Intel® Q87/H87: 6 x SATA3 6.0 Gb/s
	Additional SATA Controller	ASMedia ASM1061: 2 x SATA3 6.0 Gb/s
Graphics	Controller	Intel® HD Graphics Built-in Visuals and the VGA outputs can be supported only with processors which are GPU integrated
	VRAM	Max. shared memory 1760MB
	Output	Max. 2048x1536 @ 75Hz

Audio	Audio Codec	Q87WSA-DL / H87WSA-DL: Realtek ALC662
Ethernet	Interface	Gigabit LAN 10/100/1000 Mb/s
	LAN Controller	Q87WSA-DL / Q87WS-DL: 1 x Intel® i210, 1 x Intel® i217LM (with vPro support) H87WSA-DL / H87WS-DL: 2 x Realtek RTL8111E VL Supports Dual LAN with Teaming
Rear Panel I/O	LAN Port (RJ45)	2
	PS/2 KB/ Mouse	2
	VGA Port	1 x D-Sub
	USB 2.0 Port	4
	USB 3.0 Port	2
	COM Port	1
	Audio	Q87WSA-DL / H87WSA-DL: 3 Jack
Internal Connectors	COM Port Header	1
	Auxiliary Panel Header	1 (includes chassis intrusion, location button & LED, front LAN LED)
	TPM Header	1
	Front Panel Audio Header	Q87WSA-DL / H87WSA-DL: 1
	HDMI_ SPDIF Header	Q87WSA-DL / H87WSA-DL: 1
	Fan Header	6 (2 x 4-pin, 4 x 3-pin)
	ATX Power	1 (24-pin) + 1 (8-pin)
	USB 2.0 Header	3 (each supports 2 USB 2.0)
	USB 3.0 Header	1 (each supports 2 USB 3.0)

Support OS	OS	Microsoft® Windows®: 7 32/64-bit / 8 32/64-bit / 10 64-bit Linux: - CentOS 5.5 / 6.4 (x32 and x64) - SUSE Enterprise Linux Server 11 SP1 (x32 and x64) - Fedora core 18 (x64) - UBuntu 12.04 / 12.10 (x64)

1.3 Unique Features

ASRock Instant Flash

ASRock Instant Flash is a BIOS flash utility embedded in Flash ROM. This convenient BIOS update tool allows you to update system BIOS without entering operating systems first like MS-DOS or Windows®. With this utility, you can press the <F6> key during the POST or the <F2> key to enter into the BIOS setup menu to access ASRock Instant Flash. Just launch this tool and save the new BIOS file to your USB flash drive, floppy disk or hard drive, then you can update your BIOS only in a few clicks without preparing an additional floppy diskette or other complicated flash utility. Please be noted that the USB flash drive or hard drive must use FAT32/16/12 file system.

1.4 Motherboard Layout

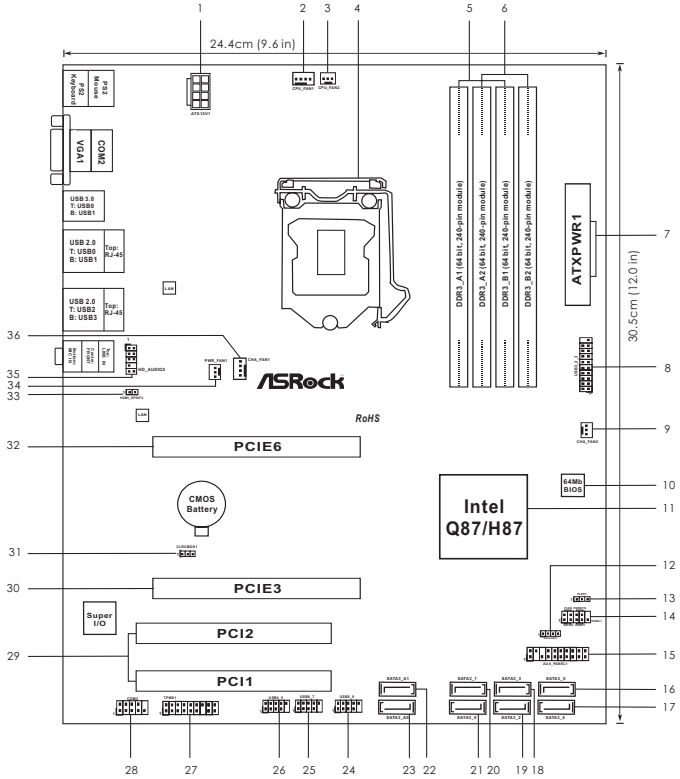

1	ATX 12V Power Connector (ATX12V1)	18	SATA3 Connector (SATA3_3)
2	CPU Fan Connector (CPU_FAN1)	19	SATA3 Connector (SATA3_2)
3	CPU Fan Connector (CPU_FAN2)	20	SATA3 Connector (SATA3_1)
4	1150-Pin CPU Socket	21	SATA3 Connector (SATA3_0)
5	2 x 240-pin DDR3 DIMM Slots (DDR3_A1, DDR3_B1, Blue)	22	SATA3 Connector (SATA3_A1)
		23	SATA3 Connector (SATA3_A0)
6	2 x 240-pin DDR3 DIMM Slots (DDR3_A2, DDR3_B2, White)	24	USB 2.0 Header (USB8_9)
		25	USB 2.0 Header (USB6_7)
7	ATX Power Connector (ATXPWR1)	26	USB 2.0 Header (USB4_5)
8	USB 3.0 Header (USB3_2_3)	27	TPM Header (TPMS1)
9	Chassis Fan Connector (CHA_FAN2)	28	COM Port Header (COM2)
10	SPI Flash Memory (64Mb)	29	PCI Slots (PCI1-2)
11	Intel Q87/H87 Chipset	30	PCI Express 2.0 x16 Slot (PCIE3)
12	Chassis Speaker Header (SPEAKER1)	31	Clear CMOS Jumper (CLRCMOS1)
13	Power LED Header (PLED1)	32	PCI Express 3.0 x16 Slot (PCIE6)
14	System Panel Header (PANEL1)	33	HDMI_SPDIF Header (HDMI_SPDIF2)*
15	Auxiliary Panel Header (AUX_PANEL1)	34	Power Fan Connector (PWR_FAN1)
16	SATA3 Connector (SATA3_5)	35	Front Panel Audio Header (HD_AUDIO2)*
17	SATA3 Connector (SATA3_4)	36	Chassis Fan Connector (CHA_FAN1)

*** HDMI_SPDIF header, front panel audio header, and the audio jacks on the I/O panel are for Q87WSA-DL / H87WSA-DL only.**

1.5 I/O Panel

Q87WSA-DL / H87WSA-DL

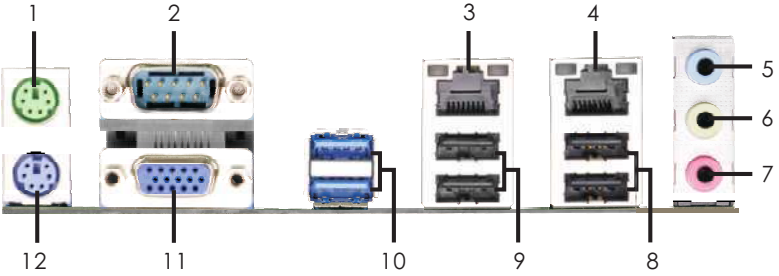

1	PS/2 Mouse Port (Green)	7	Microphone (Pink)
2	COM Port (COM1)	8	USB 2.0 Ports (USB23)
3	LAN RJ-45 Port (LAN1)*	9	USB 2.0 Ports (USB01)
4	LAN RJ-45 Port (LAN2)*	10	USB 3.0 Ports (USB3_01)
5	Line In (Light Blue)	11	VGA Port (VGA1)
6	Front Speaker (Lime)**	12	PS/2 Keyboard Port (Purple)

* There are two LED next to the LAN port. Please refer to the table below for the LAN port LED indications.

LAN Port LED Indications

Activity/Link LED

Status	Description
Off	No Link
Blinking	Data Activity
On	Link

SPEED LED

Status	Description
Off	10Mbps connection
Orange	100Mbps connection
Green	1Gbps connection

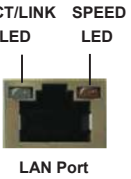

** To enable Multi-Streaming function, you need to connect a front panel audio cable to the front panel audio header. Please refer to below steps for the software setting of Multi-Streaming. After restarting your computer, please double-click “Realtek HD Audio Manager” on the system tray. Set “Speaker Configuration” to “Quadraphonic” or “Stereo”. Click “Device advanced settings”, choose “Make front and rear output devices playbacks two different audio streams simultaneously”, and click “ok”. Then reboot your system.

Q87WS-DL / H87WS-DL

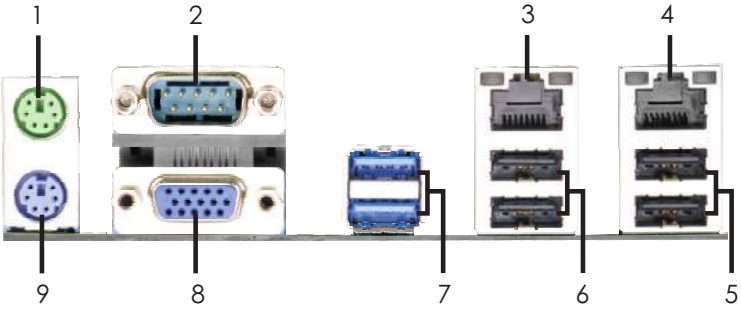

1	PS/2 Mouse Port (Green)	6	USB 2.0 Ports (USB01)
2	COM Port (COM1)	7	USB 3.0 Ports (USB3_01)
3	LAN RJ-45 Port (LAN1)*	8	VGA Port (VGA1)
4	LAN RJ-45 Port (LAN2)*	9	PS/2 Keyboard Port (Purple)
5	USB 2.0 Ports (USB23)		

* There are two LED next to the LAN port. Please refer to the table below for the LAN port LED indications.

LAN Port LED Indications

Activity/Link LED

Status	Description
Off	No Link
Blinking	Data Activity
On	Link

SPEED LED

Status	Description
Off	10Mbps connection
Orange	100Mbps connection
Green	1Gbps connection

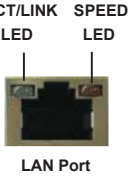

1.6 Block Diagram

Q87WSA-DL / H87WSA-DL

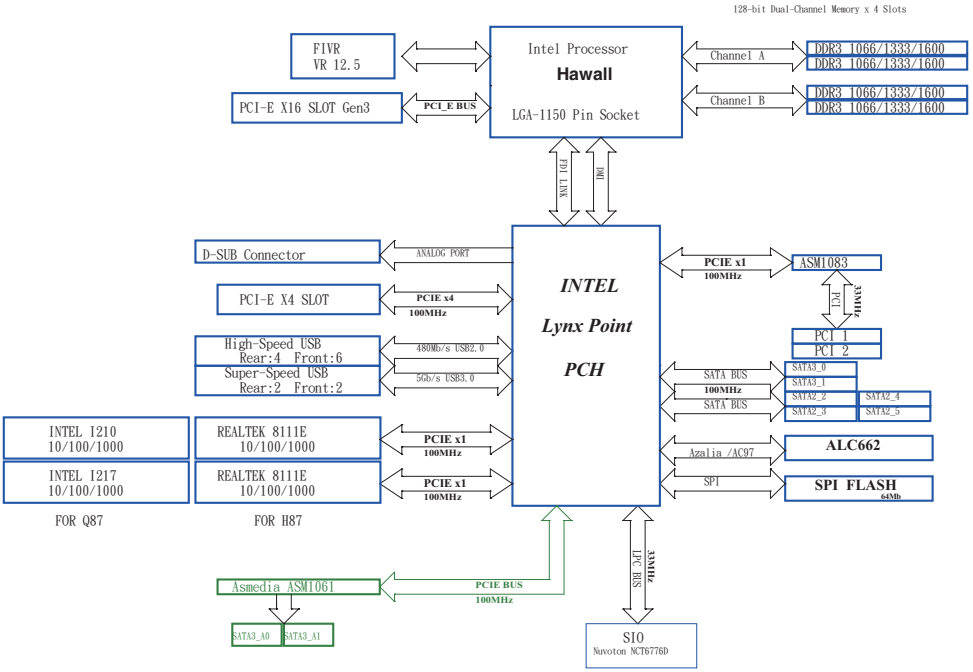

Q87WS-DL / H87WS-DL

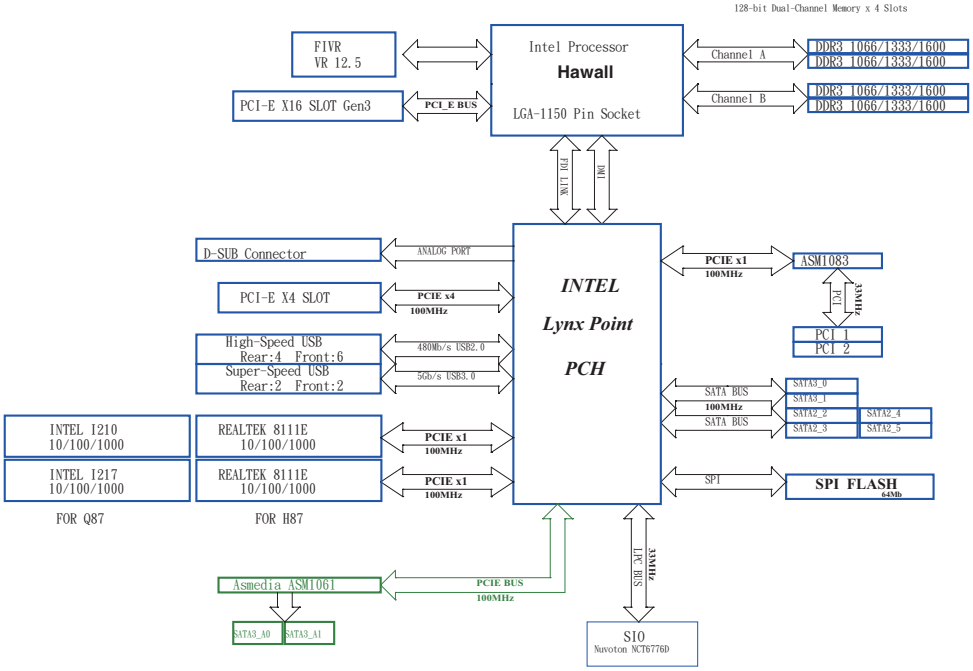

Chapter 2: Installation

This is an ATX form factor (12.0" x 9.6", 30.5 x 24.4 cm) motherboard. Before you install the motherboard, study the configuration of your chassis to ensure that the motherboard fits into it.

Make sure to unplug the power cord before installing or removing the motherboard. Failure to do so may cause physical injuries to you and damages to motherboard components.

2.1 Screw Holes

Place screws into the holes indicated by circles to secure the motherboard to the chassis.

Do not over-tighten the screws! Doing so may damage the motherboard.

2.2 Pre-installation Precautions

Take note of the following precautions before you install motherboard components or change any motherboard settings.

1. Unplug the power cord from the wall socket before touching any components.
2. To avoid damaging the motherboard's components due to static electricity, NEVER place your motherboard directly on the carpet or the like. Also remember to use a grounded wrist strap or touch a safety grounded object before you handle the components.
3. Hold components by the edges and do not touch the ICs.
4. Whenever you uninstall any component, place it on a grounded anti-static pad or in the bag that comes with the component.
5. When placing screws into the screw holes to secure the mother-board to the chassis, please do not over-tighten the screws! Doing so may damage the motherboard.

Before you install or remove any component, ensure that the power is switched off or the power cord is detached from the power supply. Failure to do so may cause severe damage to the motherboard, peripherals, and/or components.

2.3 Installing the CPU

1. Before you insert the 1150-Pin CPU into the socket, please check if the PnP cap is on the socket, if the CPU surface is unclean, or if there are any bent pins in the socket. Do not force to insert the CPU into the socket if above situation is found. Otherwise, the CPU will be seriously damaged.
2. Unplug all power cables before installing the CPU.

1

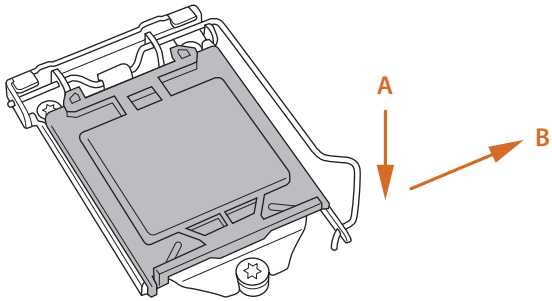

2

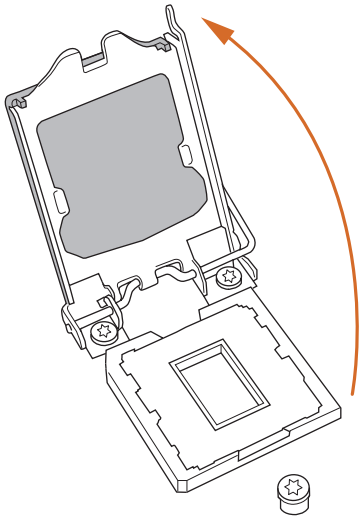

3

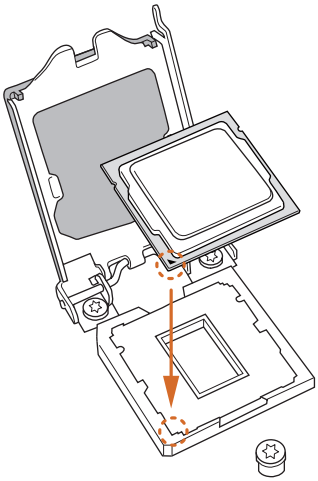

4

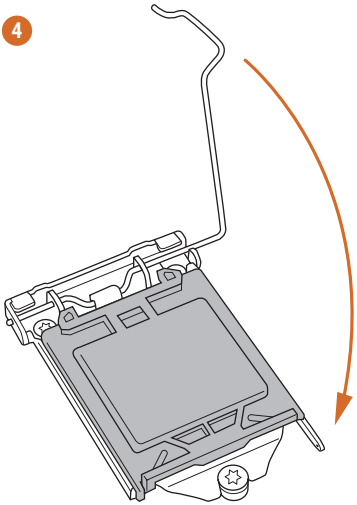

5

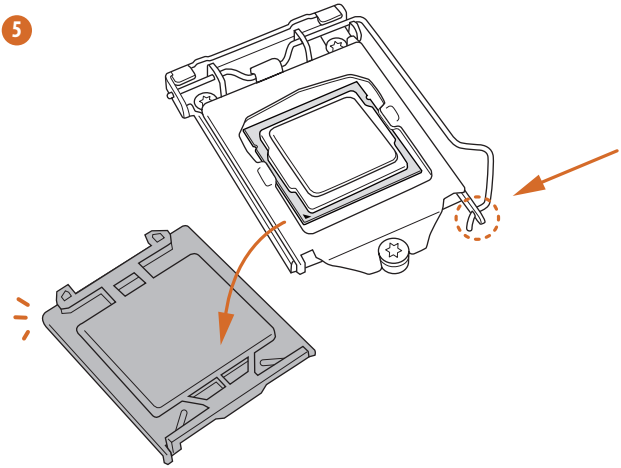

Please save and replace the cover if the processor is removed. The cover must be placed if you wish to return the motherboard for after service.

2.4 Installing the CPU Fan and Heatsink

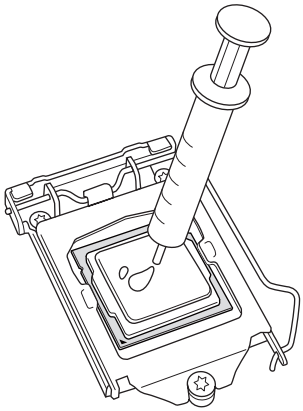

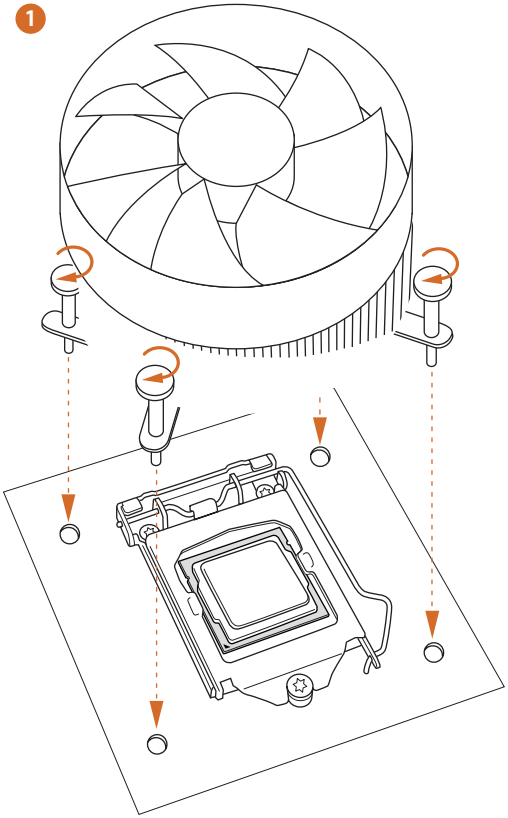

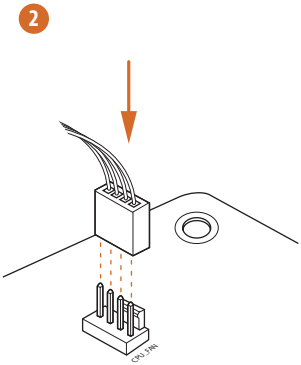

2.5 Installation of Memory Modules (DIMM)

This motherboard provides four 240-pin DDR3 (Double Data Rate 3) DIMM slots, and supports Dual Channel Memory Technology.

1. For dual channel configuration, you always need to install identical (the same brand, speed, size and chip-type) DDR3 DIMM pairs.
2. It is unable to activate Dual Channel Memory Technology with only one or three memory module installed.
3. It is not allowed to install a DDR or DDR2 memory module into a DDR3 slot; otherwise, this motherboard and DIMM may be damaged.

Dual Channel Memory Configuration

Priority	DDR3_A1	DDR3_A2	DDR3_B1	DDR3_B2
1		Populated		Populated
2	Populated		Populated	
3	Populated	Populated	Populated	Populated

The DIMM only fits in one correct orientation. It will cause permanent damage to the motherboard and the DIMM if you force the DIMM into the slot at incorrect orientation.

1

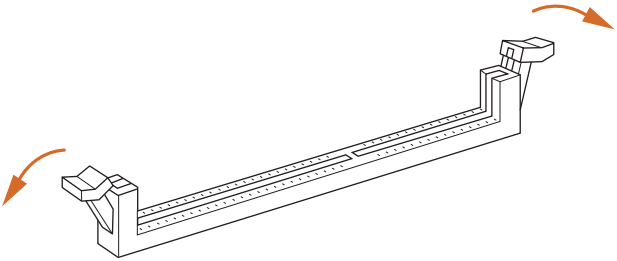

2

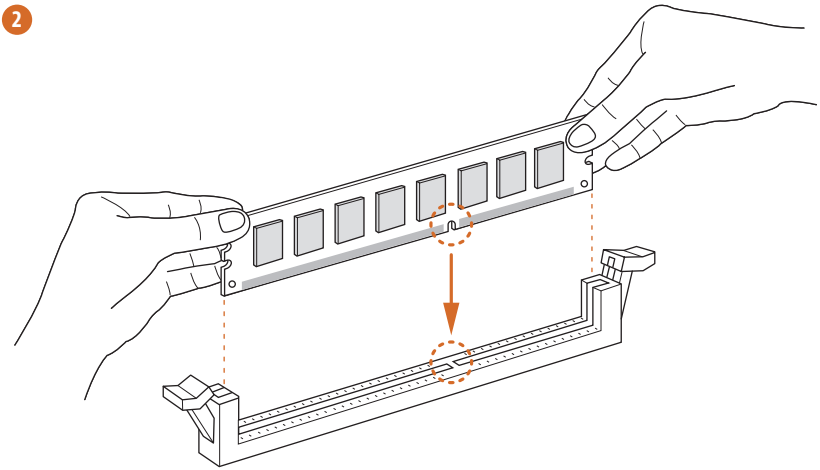

3

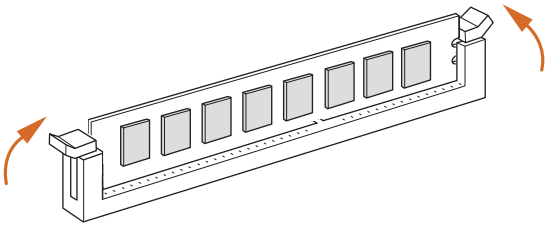

2.6 Expansion Slots (PCI and PCI Express Slots)

There are 2 PCI slots and 2 PCI Express slots on this motherboard.

PCI slots: PCI slots are used to install expansion cards that have the 32-bit PCI interface.

PCIE slots: PCIE6 (PCIE 3.0 x16 slot) is used for PCI Express x16 lane width graphics cards, or to install PCI Express graphics cards to support CrossFireX™ function.

PCIE3 (PCIE 2.0 x16 slot) is used for PCI Express x4 lane width graphics cards, or to install PCI Express graphics cards to support CrossFireX™ function.

1. In single VGA card mode, it is recommended to install a PCI Express x16 graphics card on PCIE6 slot.
2. In CrossFireX™ mode, please install the PCI Express x16 graphics cards on PCIE6 and PCIE3 slots. Therefore, PCIE6 will work at x16 bandwidth, while PCIE3 works at x4 bandwidth.
3. Please connect a chassis fan to the motherboard's chassis fan connector (CHA_FAN1 or CHA_FAN2) when using multiple graphics cards for better thermal environment.

Installing an expansion card

Step 1. Before installing an expansion card, please make sure that the power supply is switched off or the power cord is unplugged. Please read the documentation of the expansion card and make necessary hardware settings for the card before you start the installation.

Step 2. Remove the system unit cover (if your motherboard is already installed in a chassis).

Step 3. Remove the bracket facing the slot that you intend to use. Keep the screws for later use.

Step 4. Align the card connector with the slot and press firmly until the card is completely seated on the slot.

Step 5. Fasten the card to the chassis with screws.

Step 6. Replace the system cover.

2.7 CrossFireX™ and Quad CrossFireX™ Operation Guide

This motherboard supports CrossFireX™ and Quad CrossFireX™. CrossFireX™ technology offers the most advantageous means available of combining multiple high performance Graphics Processing Units (GPU) in a single PC. Combining a range of different operating modes with intelligent software design and an innovative interconnect mechanism, CrossFireX™ enables the highest possible level of performance and image quality in any 3D application. Please check AMD's website for AMD CrossFireX™ driver updates.

1. If a customer incorrectly configures their system they will not see the performance benefits of CrossFireX™. All three CrossFireX™ components, a CrossFireX™ Ready graphics card, a CrossFireX™ Ready motherboard and a CrossFireX™ Edition co-processor graphics card, must be installed correctly to benefit from the CrossFireX™ multi-GPU platform.
2. If you pair a 12-pipe CrossFireX™ Edition card with a 16-pipe card, both cards will operate as 12-pipe cards while in CrossFireX™ mode.

2.7.1 Installing Two CrossFireX™-Ready Graphics Cards

Different CrossFireX™ cards may require different methods to enable CrossFireX™ feature. For other CrossFireX™ cards that AMD has released or will release in the future, please refer to AMD graphics card manuals for detailed installation guide.

Step 1. Insert one Radeon graphics card into PCIE6 slot and the other Radeon graphics card to PCIE3 slot. Make sure that the cards are properly seated on the slots.

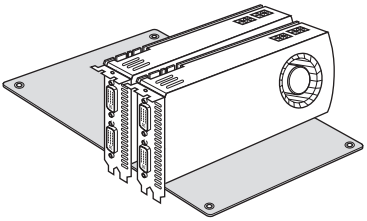

Step 2. Connect two Radeon graphics cards by installing a CrossFire Bridge on the CrossFire Bridge Interconnects on the top of the Radeon graphics cards. (The CrossFire Bridge is provided with the graphics card you purchase, not bundled with this motherboard. Please refer to your graphics card vendor for details.)

CrossFire Bridge

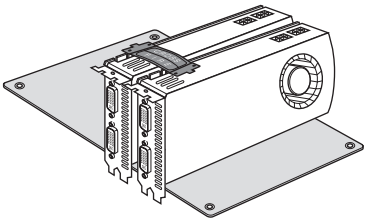

Step 3. Connect the DVI monitor cable to the DVI connector on the Radeon graphics card on PCIE6 slot. (You may use the DVI to D-Sub adapter to convert the DVI connector to D-Sub interface, and then connect the D-Sub monitor cable to the DVI to D-Sub adapter.)

2.7.2 Driver Installation and Setup

Step 1. Power on your computer and boot into OS.

Step 2. Remove the AMD drivers if you have any VGA drivers installed in your system.

The Catalyst Uninstaller is an optional download. We recommend using this utility to uninstall any previously installed Catalyst drivers prior to installation. Please check AMD's website for AMD driver updates.

Step 3. Install the required drivers to your system.

For Windows® 8 / 7 OS:

Install the CATALYST Control Center. Please check AMD's website for details.

Step 4. Restart your computer.

Step 5. Install the VGA card drivers to your system, and restart your computer. You will find "AMD Catalyst Control Center" on your Windows® taskbar.

AMD Catalyst Control Center

Step 6. Double-click "ATI Catalyst Control Center". Click "View", select "CrossFireX™", and then check the item "Enable CrossFireX™". Select "2 GPUs" and click "Apply".

Although you have selected the option “Enable CrossFire™”, the CrossFireX™ function may not work actually. Your computer will automatically reboot. After restarting your computer, please confirm whether the option “Enable CrossFire™” in “ATI Catalyst Control Center” is selected or not; if not, please select it again, and then you are able to enjoy the benefits of CrossFireX™.

Step 7. You can freely enjoy the benefits of CrossFireX™ or Quad CrossFireX™.

* CrossFireX™ appearing here is a registered trademark of AMD Technologies Inc., and is used only for identification or explanation and to the owners’ benefit, without intent to infringe.
* For further information of AMD CrossFireX™ technology, please check AMD’s website for updates and details.

2.8 Jumpers Setup

The illustration shows how jumpers are setup. When the jumper cap is placed on pins, the jumper is “Short”. If no jumper cap is placed on pins, the jumper is “Open”. The illustration shows a 3-pin jumper whose pin1 and pin2 are “Short” when jumper cap is placed on these 2 pins.

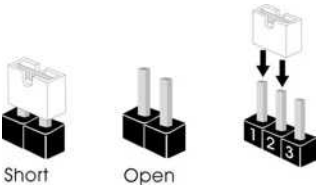

Jumper	Setting	Description
Clear CMOS Jumper (CLRCMOS1) (see p.10, No. 31)	1_2 Default 2_3 Clear CMOS	

Note: CLRCMOS1 allows you to clear the data in CMOS. To clear and reset the system parameters to default setup, please turn off the computer and unplug the power cord from the power supply. After waiting for 15 seconds, use a jumper cap to short pin2 and pin3 on CLRCMOS1 for 5 seconds. However, please do not clear the CMOS right after you update the BIOS. If you need to clear the CMOS when you just finish updating the BIOS, you must boot up the system first, and then shut it down before you do the clear-CMOS action. Please be noted that the password, date, time, user default profile, 1394 GUID and MAC address will be cleared only if the CMOS battery is removed.

2.9 Onboard Headers and Connectors

Onboard headers and connectors are NOT jumpers. Do NOT place jumper caps over these headers and connectors. Placing jumper caps over the headers and connectors will cause permanent damage of the motherboard!

Serial ATA3 Connectors

(SATA3_0: see p.10, No. 21)

(SATA3_1: see p.10, No. 20)

(SATA3_2: see p.10, No. 19)

(SATA3_3: see p.10, No. 18)

(SATA3_4: see p.10, No. 17)

(SATA3_5: see p.10, No. 16)

(SATA3_A0: see p.10, No. 23)

(SATA3_A1: see p.10, No. 22)

These Serial ATA3 (SATA3) connectors support SATA data cables for internal storage devices. The current SATA3 interface allows up to 6.0 Gb/s data transfer rate.

Serial ATA (SATA) Data Cable

(Optional)

Either end of the SATA data cable can be connected to the SATA / SATA2 / SATA3 hard disk or the SATA2 / SATA3 connector on this motherboard.

USB 2.0 Headers

(9-pin USB4_5)

(see p.10, No. 26)

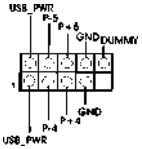

(9-pin USB6_7)
(see p.10, No. 25)

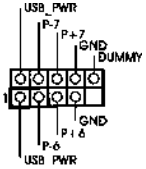

(9-pin USB8_9)
(see p.10, No. 24)

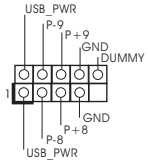

Besides four default USB 2.0 ports on the I/O panel, there are three USB 2.0 headers on this motherboard. Each USB 2.0 header can support two USB 2.0 ports.

USB 3.0 Header

(19-pin USB3_2_3)

(see p.10, No. 8)

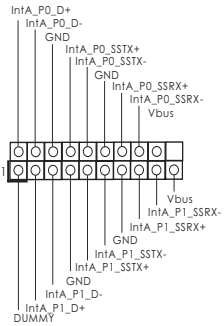

Besides two default USB 3.0 ports on the I/O panel, there is one USB 3.0 header on this motherboard. This USB 3.0 header can support two USB 3.0 ports.

TPM Header

(17-pin TPMS1)

(see p.10 No. 27)

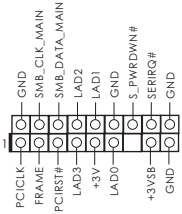

This connector supports a Trusted Platform Module (TPM) system, which can securely store keys, digital certificates, passwords, and data. A TPM system also helps enhance network security, protects digital identities, and ensures platform integrity.

System Panel Header

(9-pin PANEL1)

(see p.10, No. 14)

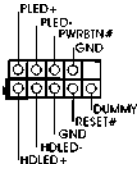

This header accommodates several system front panel functions.

Connect the power switch, reset switch and system status indicator on the chassis to this header according to the pin assignments below. Note the positive and negative pins before connecting the cables.

PWRBTN (Power Switch):
Connect to the power switch on the chassis front panel. You may configure the way to turn off your system using the power switch.
RESET (Reset Switch):
Connect to the reset switch on the chassis front panel. Press the reset switch to restart the computer if the computer freezes and fails to perform a normal restart.

PLED (System Power LED):
Connect to the power status indicator on the chassis front panel. The LED is on when the system is operating. The LED keeps blinking when the system is in S1/S3 sleep state. The LED is off when the system is in S4 sleep state or powered off (S5).
HDLED (Hard Drive Activity LED):
Connect to the hard drive activity LED on the chassis front panel. The LED is on when the hard drive is reading or writing data.

The front panel design may differ by chassis. A front panel module mainly consists of power switch, reset switch, power LED, hard drive activity LED, speaker and etc. When connecting your chassis front panel module to this header, make sure the wire assignments and the pin assign-ments are matched correctly.

Auxiliary Panel Header

(18-pin AUX_PANEL1)

(see p.10, No. 15)

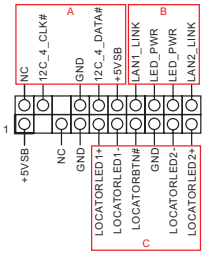

This header supports multiple functions on the front panel, including the front panel SMB, internet status indicator and chassis intrusion pin.

A. Front panel SMBus connecting pin (6-1 pin FPSMB)
This header allows you to connect SMBus (System Management Bus) equipment. It can be used for communication between peripheral equipment in the system, which has slower transmission rates, and power management equipment.
B. Internet status indicator (2-pin LAN1_LED, LAN2_LED)
These two 2-pin headers allow you to use the Gigabit internet indicator cable to connect to the LAN status indicator. When this indicator flickers, it means that the internet is properly connected.
C. Locator LED (6-pin LOCATOR)
This header is for the locator switch and LED on the front panel.

Chassis Speaker Header

(4-pin SPEAKER 1)

(see p.10, No. 12)

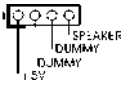

Please connect the chassis speaker to this header.

Power LED Header

(3-pin PLED1)

(see p.10, No. 13)

Please connect the chassis power LED to this header to indicate system power status. The LED is on when the system is operating. The LED keeps blinking in S1/S3 state. The LED is off in S4 state or S5 state (power off).

Chassis and Power Fan Connectors

(4-pin CHA_FAN1)

(see p.10, No. 36)

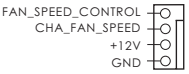

(3-pin CHA_FAN2)

(see p.10, No. 9)

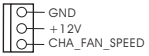

(3-pin PWR_FAN1)

(see p.10, No. 34)

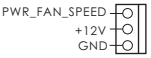

Please connect the fan cables to the fan connectors and match the black wire to the ground pin.

CPU Fan Connectors

(4-pin CPU_FAN1)

(see p.10, No. 2)

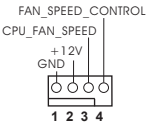

Please connect the CPU fan cable to the connector and match the black wire to the ground pin.

Though this motherboard provides 4-Pin CPU fan (Quiet Fan) support, the 3-Pin CPU fan still can work successfully even without the fan speed control function. If you plan to connect the 3-Pin CPU fan to the CPU fan connector on this motherboard, please connect it to Pin 1-3.

Pin 1-3 Connected

3-Pin Fan Installation

(3-pin CPU_FAN2)

(see p.10, No. 3)

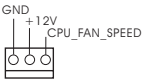

ATX Power Connector

(24-pin ATXPWR1)

(see p.10, No. 7)

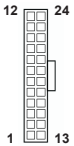

Please connect an ATX power supply to this connector.

Though this motherboard provides 24-pin ATX power connector, it can still work if you adopt a traditional 20-pin ATX power supply. To use the 20-pin ATX power supply, please plug your power supply along with Pin 1 and Pin 13.

20-Pin ATX Power Supply Installation

ATX 12V Power Connector

(8-pin ATX12V1)

(see p.10, No. 1)

Please connect an ATX 12V power supply to this connector.

Though this motherboard provides 8-pin ATX 12V power connector, it can still work if you adopt a traditional 4-pin ATX 12V power supply. To use the 4-pin ATX power supply, please plug your power supply along with Pin 1 and Pin 5.

4-Pin ATX 12V Power Supply Installation

Serial port Header

(9-pin COM2)

(see p.10, No. 28)

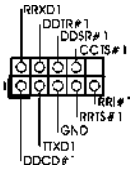

This COM2 header supports a serial port module.

HDMI_SPDIF Header

(2-pin HDMI_SPDIF2)

(see p.10 No. 33)

HDMI_SPDIF header, providing SPDIF audio output to HDMI VGA card, allows the system to connect HDMI Digital TV/ projector/LCD devices. Please connect the HDMI_SPDIF connector of HDMI VGA card to this header.

Front Panel Audio Header

(9-pin HD_AUDIO2)

(see p.10 No. 35)

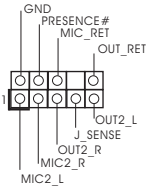

This is an interface for the front panel audio cable that allows convenient connection and control of audio devices.

1. High Definition Audio supports Jack Sensing, but the panel wire on the chassis must support HDA to function correctly. Please follow the instruction in our manual and chassis manual to install your system.
2. If you use AC'97 audio panel, please install it to the front panel audio header as below:
   A. Connect Mic_IN (MIC) to MIC2_L.
   B. Connect Audio_R (RIN) to OUT2_R and Audio_L (LIN) to OUT2_L.
   C. Connect Ground (GND) to Ground (GND).
   D. MIC_RET and OUT_RET are for HD audio panel only. You don't need to connect them for AC'97 audio panel.

2.10 Driver Installation Guide

To install the drivers to your system, please insert the support CD to your optical drive first. Then, the drivers compatible to your system can be auto-detected and listed on the support CD driver page. Please follow the order from top to bottom to install those required drivers. Therefore, the drivers you install can work properly.

2.11 Intel® vPro Configuration and Management (For Q87WSA-DL / Q87WS-DL Only)

If you would like to configure and manage Intel vPro Technology, please install "Intel Open Manageability Developer Tool Kit", which is located in the folder at the following path of the Support CD: ..\Utilities\ManageabilityToolKit\(v1.21)\Manageability DeveloperToolKit.
msi. You can download the latest version of the tool kit
from http://opentools.homeip.net/open-manageability.

2.12 Dual LAN and Teaming Operation Guide (For H87WSA-DL / H87WS-DL Only)

Dual LAN with Teaming function enabled on this motherboard allows two single connections to act as one single connection for twice the transmission bandwidth, making data transmission more effective and improving the quality of transmission of distant images. Fault tolerance on the dual LAN network prevents network downtime by transferring the workload from a failed port to a working port.

The speed of transmission is subject to the actual network environment or status even with Teaming enabled.

Before setting up Teaming function, please make sure if your Switch (or Router) could support Teaming (IEEE 802.3ad Link Aggregation) function. (For example: D-Link DGS-3100.) Then, please refer to following steps to set up Teaming function according to the OS you install.

1. Install Teaming driver from the following path of motherboard Support CD:
   .. \ Drivers \ other \ EXE_Teaming_Green(Normal)
   (This is a special driver for Teaming function only. If you don't want to use Teaming, please install the LAN driver provided by our support CD link.)
   When installing teaming driver, system will show below warming message. Please choose **Continue Anyway** and keep installing driver.
2. After installing driver, please open **Teaming Utility** in Programs.
   (**Start > Programs > Realtek > Teaming Utility**)
3. Click **Teaming** item and then press **Create Team** button.

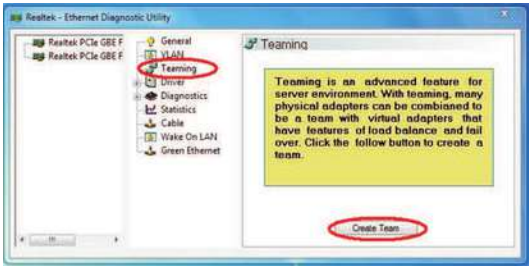

4. Key in Team Name and choose **Link Aggregation \ LACP (802.3ad)** for Settings.

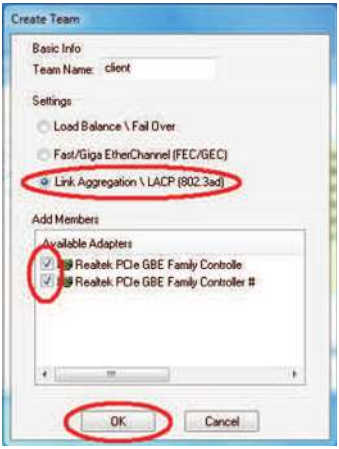

5. Select two available onboard LAN cards and then press **OK** button. (After pressing **OK** button, system will show below warming message. Please choose **Continue Anyway**.)
6. After doing above settings, system will auto create a new Local Area Connection.
7. Reboot your system. Then, you will find the **Speed** column of new Local Area Connection show 2.0Gbps.

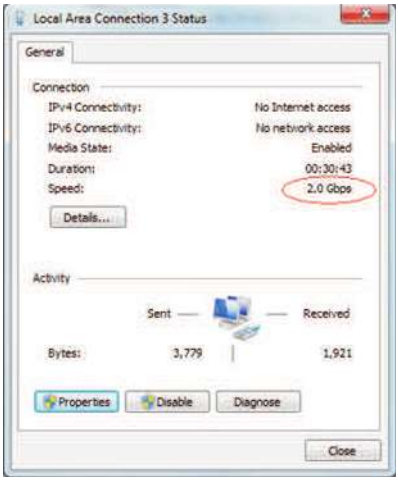

Chapter 3: UEFI SETUP UTILITY

3.1 Introduction

This section explains how to use the UEFI SETUP UTILITY to configure your system. The UEFI chip on the motherboard stores the UEFI SETUP UTILITY. You may run the UEFI SETUP UTILITY when you start up the computer. Please press <F2> or <Del> during the Power-On-Self-Test (POST) to enter the UEFI SETUP UTILITY, otherwise, POST will continue with its test routines.

If you wish to enter the UEFI SETUP UTILITY after POST, restart the system by pressing <Ctl> + <Alt> + <Delete>, or by pressing the reset button on the system chassis. You may also restart by turning the system off and then back on.

Because the UEFI software is constantly being updated, the following UEFI setup screens and descriptions are for reference purpose only, and they may not exactly match what you see on your screen.

3.1.1 UEFI Menu Bar

The top of the screen has a menu bar with the following selections:

Main	To set up the system time/date information
OC Tweaker	To set up overclocking features
Advanced	To set up the advanced UEFI features
Tool	Useful tools
H/W Monitor	To display current hardware status
Boot	To set up the default system device to locate and load the Operating System
Security	To set up the security features
Exit	To exit the current screen or the UEFI SETUP UTILITY
Event Logs	For event log configuration

Use < ← > key or < → > key to choose among the selections on the menu bar, and then press <Enter> to get into the sub screen. You can also use the mouse to click your required item.

3.1.2 Navigation Keys

Please check the following table for the function description of each navigation key.

Navigation Key(s)	Function Description
← / →	Moves cursor left or right to select Screens
↑ / ↓	Moves cursor up or down to select items
+ / -	To change option for the selected items
<Tab>	Switch to next function
<Enter>	To bring up the selected screen
<PGUP>	Go to the previous page
<PGDN>	Go to the next page
<HOME>	Go to the top of the screen
<END>	Go to the bottom of the screen
<F1>	To display the General Help Screen
<F7>	Discard changes and exit the UEFI SETUP UTILITY
<F9>	Load optimal default values for all the settings
<F10>	Save changes and exit the UEFI SETUP UTILITY
<F12>	Print screen
<ESC>	Jump to the Exit Screen or exit the current screen

3.2 Main Screen

When you enter the UEFI SETUP UTILITY, the Main screen will appear and display the system overview.

3.3 OC Tweaker Screen

In the OC Tweaker screen, you can set up overclocking features.

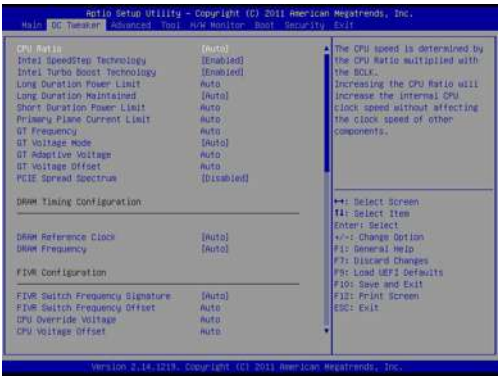

CPU Configuration

CPU Ratio

Use this item to change the ratio value of this motherboard.

Intel SpeedStep Technology

Intel SpeedStep technology is Intel's new power saving technology. Processors can switch between multiple frequencies and voltage points to enable power saving. The default value is [Enabled]. Configuration options: [Enabled] and [Disabled]. If you install Windows® 7 / 8 and want to enable this function, please set this item to [Enabled]. This item will be hidden if the current CPU does not support Intel SpeedStep technology.

Please note that enabling this function may reduce CPU voltage and lead to system stability or compatibility issues with some power supplies. Please set this item to [Disabled] if above issues occur.

Intel Turbo Boost Technology

Use this item to enable or disable Intel Turbo Boost Mode Technology. Turbo Boost Mode allows processor cores to run faster than marked frequency in specific conditions. The default value is [Enabled].

Long Duration Power Limit

Use this item to configure long duration power limit in watts. The default value is [Auto].

Long Duration Maintained

Use this item to configure time window which the long duration power is maintained. The default value is [Auto].

Short Duration Power Limit

Use this item to configure short duration power limit in watts. The default value is [Auto].

Primary Plane Current Limit

Use this item to configure the maximum instantaneous current allowed for the primary plane. The default value is [Auto].

GT Frequency

Configure the frequency of the integrated GPU.

GT Voltage Mode

Auto: For optimized settings. Adaptive: Add voltage to the integrated GPU when the system is under heavy load. Override: The voltage is fixed.

GT Adaptive Voltage

Configure the fixed voltage added to the integrated GPU.

GT Voltage Offset

Configure the voltage added to the integrated GPU when the system is under heavy load.

PCIE Spread Spectrum

Enable Spread Spectrum to reduce electromagnetic interference for passing EMI tests. Disable to achieve higher clock speeds when overclocking.

DRAM Timing Configuration

DRAM Reference Clock

Select Auto for optimized settings.

DRAM Frequency

If [Auto] is selected, the motherboard will detect the memory module(s) inserted and assign the appropriate frequency automatically.

FIVR Configuration

FIVR Switch Frequency Signature

Select whether to boost or lower the FIVR Switch Frequency.

FIVR Switch Frequency Offset

Configure the percentage of frequency boost or deduction.

CPU Override Voltage

Configure the voltage added to the CPU when the system is under heavy load.

CPU Voltage Offset

Configure the dynamic CPU voltage added to the CPU.

CPU Cache Override Voltage

Add voltage to the CPU Cache when the system is under heavy load.

CPU Cache Voltage Offset

Configure the voltage for the CPU Cache. Setting the voltage higher may increase system stability when overclocking.

System Agent Voltage Offset

Configure the voltage for the System Agent. Setting the voltage higher may increase system stability when overclocking.

CPU Analog IO Voltage Offset

CPU I/O Analog Voltage.

CPU Digital IO Voltage Offset

CPU I/O Digital Voltage.

CPU Integrated VR Faults

Disable FIVR Faults to raise the threshold to trigger CPU over current protection and over voltage protection for better overclocking capabilities.

CPU Integrated VR Efficiency Mode

Enable FIVR Efficiency Management for power saving. Disable for better performance and overclocking capabilities.

Voltage Configuration

CPU Input Voltage

Configure the voltage for the CPU.

CPU Load-Line Calibration

CPU Load-Line Calibration helps prevent CPU voltage droop when the system is under heavy load.

DRAM Voltage

Use this to configure DRAM Voltage. The default value is [Auto].

3.4 Advanced Screen

In this section, you may set the configurations for the following items: CPU Configuration, Chipset Configuration, Storage Configuration, Super IO Configuration, ACPI Configuration, USB Configuration, Serial Port Console Redirection and AMT Configuration (for Q87WSA-DL / Q87WS-DL only).

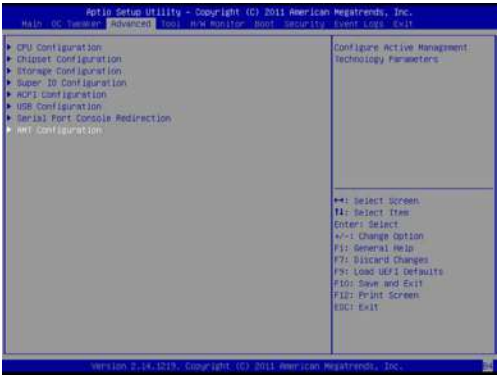

Setting wrong values in this section may cause the system to malfunction.

3.4.1 CPU Configuration

Intel TXT(LT) Support

Use this to enable or disable Intel Trusted Execution Technology .

Intel Hyper Threading Technology

Intel Hyper Threading Technology allows multiple threads to run on each core, so that the overall performance on threaded software is improved.

Active Processor Cores

Select the number of cores to enable in each processor package.

CPU C States Support

Enable CPU C States Support for power saving. It is recommended to keep C3, C6 and C7 all enabled for better power saving.

Enhanced Halt State (C1E)

Enable Enhanced Halt State (C1E) for lower power consumption.

CPU C3 State Support

Enable C3 sleep state for lower power consumption.

CPU C6 State Support

Enable C6 deep sleep state for lower power consumption.

CPU C7 State Support

Enable C7 deep sleep state for lower power consumption.

Package C State Support

Enable CPU, PCIe, Memory, Graphics C State Support for power saving.

CPU Thermal Throttling

Enable CPU internal thermal control mechanisms to keep the CPU from overheating.

No-Execute Memory Protection

Processors with No-Execution Memory Protection Technology may prevent certain classes of malicious buffer overflow attacks.

Intel Virtualization Technology

Intel Virtualization Technology allows a platform to run multiple operating systems and applications in independent partitions, so that one computer system can function as multiple virtual systems.

Hardware Prefetcher

Automatically prefetch data and code for the processor. Enable for better performance.

Adjacent Cache Line Prefetch

Automatically prefetch the subsequent cache line while retrieving the currently requested cache line. Enable for better performance.

3.4.2 Chipset Configuration

Primary Graphics Adapter

This allows you to select [Onboard], [PCI] or [PCI Express] as the boot graphic adapter priority. The default value is [PCI Express].

VT-d

Use this to enable or disable Intel® VT-d technology (Intel® Virtualization Technology for Directed I/O). The default value of this feature is [Disabled].

PCIE6 Link Speed

Select the link speed for PCIE6.

PCIE3 - ASPM

Select the ASPM for PCIE3.

PCIE6 - ASPM

Select the ASPM for PCIE6.

ASPM L0s

Select the ASPM L0s.

DMI Link ASPM Control

Select the DMI Link ASPM Control.

Share Memory

Configure the size of memory that is allocated to the integrated graphics processor when the system boots up.

IGPU Multi-Moniter

Select disable to disable the integrated graphics when an external graphics card is installed. Select enable to keep the integrated graphics enabled at all times.

Render Standby

Use this to enable or disable Render Standby by Internal Graphics Device. The default value is [Enabled].

Onboard HD Audio

Select [Auto], [Enabled] or [Disabled] for the onboard HD Audio feature. If you select [Auto], the onboard HD Audio will be disabled when PCI Sound Card is plugged.

Onboard HDMI HD Audio

This allows you to enable or disable the Onboard HDMI HD Audio feature.

Onboard LAN1

This allows you to enable or disable the Onboard LAN1 feature.

Onboard LAN2

This allows you to enable or disable the Onboard LAN2 feature.

Deep Sleep

Mobile platforms support Deep S4/S5 in DC only and desktop platforms support Deep S4/S5 in AC only. The default value is [Disabled].

Restore on AC/Power Loss

This allows you to set the power state after an unexpected AC/power loss. If [Power Off] is selected, the AC/power remains off when the power recovers. If [Power On] is selected, the AC/power resumes and the system starts to boot up when the power recovers.

Good Night LED

Use this item to enable or disable Power LED and LAN LED.

3.4.3 Storage Configuration

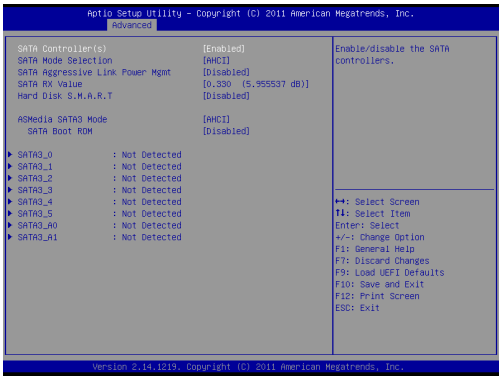

SATA Controller(s)

Use this item to enable or disable the SATA Controller feature.

SATA Mode Selection

This item is for SATA3_0 to SATA3_5 ports. Use this to select SATA mode. Configuration options: [IDE Mode], [AHCI Mode] and [RAID Mode]. The default value is [AHCI Mode].

AHCI (Advanced Host Controller Interface) supports NCQ and other new features that will improve SATA disk performance but IDE mode does not have these advantages.

SATA Aggressive Link Power Management

Use this item to configure SATA Aggressive Link Power Management.

SATA RX Value

Use this to select a different value if the SATA port has HDD compatibility issue.

Hard Disk S.M.A.R.T.

Use this item to enable or disable the S.M.A.R.T. (Self-Monitoring, Analysis, and Reporting Technology) feature. Configuration options: [Disabled] and [Enabled].

ASMedia SATA3 Mode

This item is for SATA3_A0 and SATA3_A1 ports. Use this to select ASMedia SATA3 mode. Configuration options: [IDE Mode], [AHCI Mode] and [Disabled]. The default value is [AHCI Mode].

SATA Boot ROM

Use this to enable or disable ASMedia SATA Boot ROM. The default value is [Disabled].

We recommend to use Intel® H87 SATA ports (SATA3_0 to SATA3_5 ports) for your bootable devices. This will minimum your boot time and get the best performance. But if you still want to boot from ASMedia SATA3 controller, you can still enable this in UEFI.

3.4.4 Super IO Configuration

Serial Port 1

Use this item to enable or disable the onboard serial port.

Serial Port 1 Address

Use this item to set the address for the onboard serial port. Configuration options: [2F8h / IRQ3] and [2E8h / IRQ3].

Serial Port 2

Use this item to enable or disable the onboard serial port.

Serial Port 2 Address

Use this item to set the address for the onboard serial port. Configuration options: [3F8h / IRQ4] and [3E8h / IRQ4].

3.4.5 ACPI Configuration

Suspend to RAM

Use this item to select whether to auto-detect or disable the Suspend-to-RAM feature. Selecting [Auto] will enable this feature if the OS supports it.

Check Ready Bit

Use this item to enable or disable the feature Check Ready Bit.

ACPI HPET Table

Use this item to enable or disable ACPI HPET Table. The default value is [Enabled]. Please set this option to [Enabled] if you plan to use this motherboard to submit Windows® certification.

PS/2 Keyboard Power On

Use this item to enable or disable PS/2 keyboard to turn on the system from the power-soft-off mode.

PCI Devices Power On

Use this item to enable or disable PCI devices to turn on the system from the power-soft-off mode.

Ring-In Power On

Use this item to enable or disable Ring-In signals to turn on the system from the power-soft-off mode.

RTC Alarm Power On

Use this item to enable or disable RTC (Real Time Clock) to power on the system.

USB Keyboard/Remote Power On

Use this item to enable or disable USB Keyboard/Remote to turn on the system from the power-soft-off mode.

USB Mouse Power On

Use this item to enable or disable USB Mouse to turn on the system from the power-soft-off mode.

3.4.6 USB Configuration

USB Controller

Use this item to enable or disable the use of USB controller.

Intel USB 3.0 Mode

Use this item to enable or disable the use of Intel USB 3.0 mode.

Legacy USB Support

Use this option to select legacy support for USB devices. There are four configuration options: [Enabled], [Auto], [Disabled] and [UEFI Setup Only]. The default value is [Enabled]. Please refer to below descriptions for the details of these four options:

[Enabled] - Enables support for legacy USB.

[Auto] - Enables legacy support if USB devices are connected.

[Disabled] - USB devices are not allowed to use under legacy OS and UEFI setup when [Disabled] is selected. If you have USB compatibility issues, it is recommended to select [Disabled] to enter OS.

[UEFI Setup Only] - USB devices are allowed to use only under UEFI setup and Windows / Linux OS.

Legacy USB 3.0 Support

Use this option to enable or disable legacy support for USB 3.0 devices. The default value is [Enabled].

3.4.7 Serial Port Console Redirection

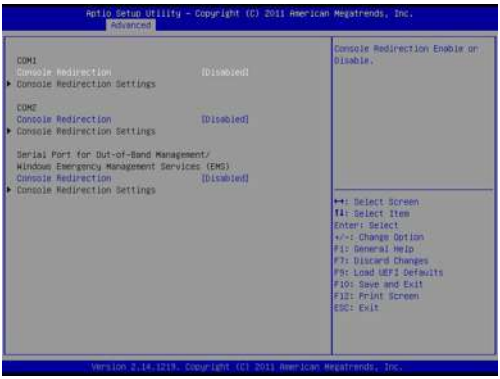

3.4.8 AMT Configuration (For Q87WSA-DL / Q87WS-DL Only)

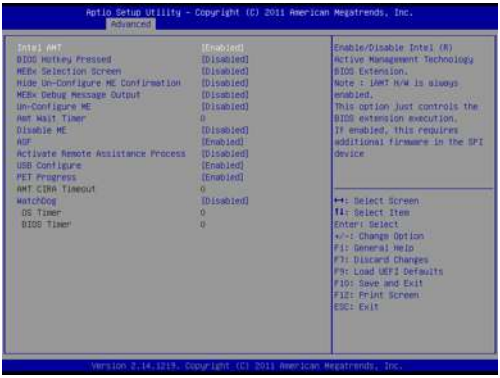

Intel AMT

Use this item to enable/disable Intel(R) Active Management Technology BIOS Extension.

BIOS Hotkey Pressed

Use this item to enable/disable BIOS hotkey press.

MEBx Selection Screen

Use this item to enable/disable MEBx selection screen.

Hide Un-Configure ME Confirmation Prompt

Use this item to enable/disable hide un-configure ME without password confirmation prompt.

MEBx Debug Message Output

Use this item to enable/disable MEBx debug message output.

Un-Configure ME

Use this item to enable/disable un-configure ME without password.

Amt Wait Timer

Set timer to wait before sending ASF_GET_BOOT_OPTIONS.

Disable ME

Use this item to enable/disable set ME to soft temporary.

ASF

Use this item to enable/disable Alert Specification Format.

Activate Remote Assistance Process

Use this item to enable/disable trigger CIRA boot.

USB Configure

Use this item to enable/disable USB configure function.

PET Progress

Use this item to enable/disable PET Events progress to recieve PET events or not.

WatchDog

Use this item to enable/disable WatchDog Timer.

3.5 Tool

UEFI Update Utility

Instant Flash

Instant Flash is a UEFI flash utility embedded in Flash ROM. This convenient UEFI update tool allows you to update system UEFI without entering operating systems first like MS-DOS or Windows®. Just save the new UEFI file to your USB flash drive, floppy disk or hard drive and launch this tool, then you can update your UEFI only in a few clicks without preparing an additional floppy diskette or other complicated flash utility. Please be noted that the USB flash drive or hard drive must use FAT32/16/12 file system. If you execute Instant Flash utility, the utility will show the UEFI files and their respective information. Select the proper UEFI file to update your UEFI, and reboot your system after the UEFI update process is completed.

3.6 Hardware Health Event Monitoring Screen

In this section, it allows you to monitor the status of the hardware on your system, including the parameters of the CPU temperature, motherboard temperature, CPU fan speed, chassis fan speed, and the critical voltage.

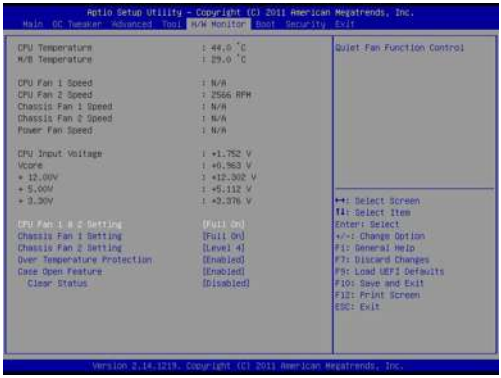

CPU Fan 1 & 2 Setting

This allows you to set CPU fan 1 & 2's speed. Configuration options: [Full On] and [Automatic Mode]. The default value is [Full On].

Chassis Fan 1 Setting

This allows you to set chassis fan 1's speed. Configuration options: [Full On], [Manual Mode] and [Automatic Mode]. The default value is [Full On].

Chassis Fan 2 Setting

This allows you to set chassis fan 2's speed. Configuration options: [Level 1] to [Level 4]. The default is value [Level 4].

Over Temperature Protection

Use this to enable or disable Over Temperature Protection. The default value is [Enabled].

Case Open Feature

This allows you to enable or disable case open detection feature. The default is value [Enabled].

Clear Status

This option appears only when the case open has been detected. Use this option to keep or clear the record of previous chassis intrusion status.

3.7 Boot Screen

In this section, it will display the available devices on your system for you to configure the boot settings and the boot priority.

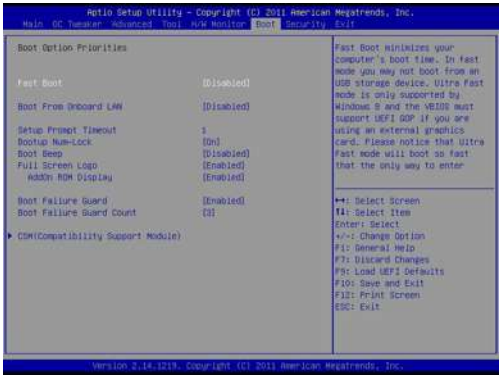

Fast Boot

Fast Boot minimizes your computer's boot time. There are three configuration options: [Disabled], [Fast] and [Ultra Fast]. The default value is [Disabled]. Please refer to below descriptions for the details of these three options:

[Disabled] - Disable Fast Boot.

[Fast] - The only restriction is you may not boot by using an USB flash drive.

[Ultra Fast] - There are a few restrictions.

1. Only supports Windows® 8 UEFI operating system.
2. You will not be able to enter BIOS Setup (Clear CMOS or run utility in Widows® to enter BIOS Setup).
3. If you are using an external graphics card, the VBIOS must support UEFI GOP in order to boot.

Boot From Onboard LAN

Use this item to enable or disable the Boot From Onboard LAN feature.

Setup Prompt Timeout

This shows the number of seconds to wait for setup activation key.

Bootup Num-Lock

If this item is set to [On], it will automatically activate the Numeric Lock function after boot-up.

Boot Beep

Select whether the Boot Beep should be turned on or off when the system boots up. Please note that a buzzer is needed.

Full Screen Logo

Use this item to enable or disable OEM Logo. The default value is [Enabled].

AddOn ROM Display

Use this option to adjust AddOn ROM Display. If you enable the option “Full Screen Logo” but you want to see the AddOn ROM information when the system boots, please select [Enabled]. Configuration options: [Enabled] and [Disabled]. The default value is [Enabled].

Boot Failure Guard

Enable or disable the feature of Boot Failure Guard.

Boot Failure Guard Count

Enable or disable the feature of Boot Failure Guard Count.

CSM

Please disable CSM when you enable Fast Boot option. The default value is [Enabled].

3.8 Security Screen

In this section, you may set or change the supervisor/user password for the system. For the user password, you may also clear it.

Secure Boot

Use this to enable or disable Secure Boot. The default value is [Disabled].

3.9 Exit Screen

Save Changes and Exit

When you select this option, the following message “Save configuration changes and exit setup?” will pop-out. Select [Yes] to save the changes and exit the UEFI SETUP UTILITY.

Discard Changes and Exit

When you select this option, the following message “Discard changes and exit setup?” will pop-out. Select [Yes] to exit the UEFI SETUP UTILITY without saving any changes.

Discard Changes

When you select this option, the following message “Discard changes?” will pop-out. Select [Yes] to discard all changes.

Load UEFI Defaults

Load UEFI default values for all the setup questions. F9 key can be used for this operation.

Launch EFI Shell from filesystem device

Attempts to Launch EFI Shell application (Shell64.efi) from one of the available filesystem devices.

3.10 Event Logs

Change Smbios Event Log Settings

This allows you to configure the Smbios Event Log Settings.

View Smbois Event Log

This allows you to view the Smbios Event Log.

Chapter 4: Software Support

4.1 Install Operating System

This motherboard supports Microsoft® Windows® 7 32/64-bit, 8 32/64-bit, 10 64-bit and Linux compliant. Because motherboard settings and hardware options vary, use the setup procedures in this chapter for general reference only. Refer your OS documentation for more information.

4.2 Support CD Information

The Support CD that came with the motherboard contains necessary drivers and useful utilities that enhance the motherboard's features.

4.2.1 Running The Support CD

To begin using the support CD, insert the CD into your CD-ROM drive. The CD automatically displays the Main Menu if "AUTORUN" is enabled in your computer. If the Main Menu does not appear automatically, locate and double click on the file "ASRSETUP.EXE" from the BIN folder in the Support CD to display the menu.

4.2.2 Drivers Menu

The Drivers Menu shows the available device's drivers if the system detects installed devices. Please install the necessary drivers to activate the devices.

4.2.3 Utilities Menu

The Utilities Menu shows the application softwares that the motherboard supports. Click on a specific item then follow the installation wizard to install it.

4.2.4 Contact Information

If you need to contact ASRock or want to know more about ASRock, welcome to visit ASRock's website at http://www.asrock.com; or you may contact your dealer for further information.

Chapter 5: Troubleshooting

5.1 Troubleshooting Procedures

Follow the procedures below to troubleshoot your system.

Always unplug the power cord before adding, removing or changing any hardware components. Failure to do so may cause physical injuries to you and damages to motherboard components.

1. Disconnect the power cable and check whether the PWR LED is off.
2. Unplug all cables, connectors and remove all add-on cards from the motherboard. Make sure that the jumpers are set to default settings.
3. Confirm that there are no short circuits between the motherboard and the chassis.
4. Install a CPU and fan on the motherboard, then connect the chassis speaker and power LED.

If there is no power...

1. Confirm that there are no short circuits between the motherboard and the chassis.
2. Make sure that the jumpers are set to default settings.
3. Check the settings of the 115V/230V switch on the power supply.
4. Verify if the battery on the motherboard provides ~3VDC. Install a new battery if it does not.

If there is no video...

1. Try replugging the monitor cables and power cord.
2. Check for memory errors.

If there are memory errors...

1. Verify that the DIMM modules are properly seated in the slots.
2. Use recommended DDR3 1600/1333/1066 ECC DIMMs.
3. If you have installed more than one DIMM modules, they should be identical with the same brand, speed, size and chip-type.
4. Try inserting different DIMM modules into different slots to identify faulty ones.
5. Check the settings of the 115V/230V switch on the power supply.

Unable to save system setup configurations...

1. Verify if the battery on the motherboard provides ~3VDC. Install a new battery if it does not.
2. Confirm whether your power supply provides adaquate and stable power.

Other problems...

1. Try searching keywords related to your problem on ASRock's FAQ page:
   http://www.asrock.com/support/faq.asp
2. Try downloading and updating the latest UEFI on ASRock's website:
   http://www.asrock.com/support/download.asp

5.2 Technical Support Procedures

If you have tried the troubleshooting procedures mentioned above and the problems are still unsolved, please contact ASRock's technical support with the following information:

1. Your contact information
2. Model name, BIOS version and problem type.
3. System configuration.
4. Problem description.

You may contact ASRock's technical support at:
http://www.asrock.com/support/tsd.asp

5.3 Returning Merchandise for Service

For warranty service, the receipt or a copy of your invoice marked with the date of purchase is required. By calling your vendor or going to our RMA website (http://www.asrock.com/support/index.asp?cat=RMA) you may obtain a Returned Merchandise Authorization (RMA) number.
The RMA number should be displayed on the outside of the shipping carton which is mailed prepaid or hand-carried when you return the motherboard to the manufacturer. Shipping and handling charges will be applied for all orders that must be mailed when service is complete.

This warranty does not cover damages incurred in shipping or from failure due to alteration, misuse, abuse or improper maintenance of products.

Contact your distributor first for any product related problems during the warranty period.