VG27AQL5F Series
LCD Monitor

User Guide

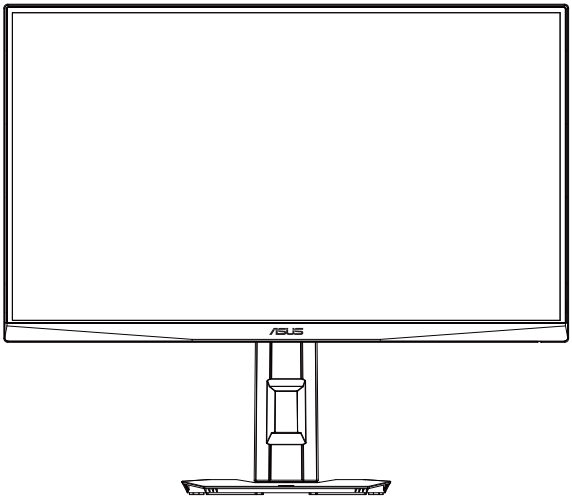

HIGH-DEFINITION MULTIMEDIA INTERFACE

Table of contents

Notices iii

Safety information v

Care & Cleaning viii

Takeback Services ix

1.1 Welcome! 1-1

1.2 Package contents 1-1

1.3 Assembling the monitor 1-2

1.4 Detaching the arm/stand (for VESA wall mount) 1-3

1.5 Cable management(include I/O port) 1-4

1.6 Adjusting the monitor 1-5

2.1 Monitor introduction 2-1

2.1.1 Front view 2-1

2.1.2 Back view 2-3

3.1 OSD (On-Screen Display) menu 3-1

3.1.1 How to reconfigure 3-1

3.1.2 OSD Function Introduction 3-3

3.2 Display Widget Center 3-15

3.3 Specifications summary 3-17

3.4 Outline dimension 3-19

3.5 Troubleshooting (FAQ) 3-20

3.6 Supported Timing List 3-21

Copyright © 2026 ASUSTeK COMPUTER INC. All Rights Reserved.

No part of this manual, including the products and software described in it, may be reproduced, transmitted, transcribed, stored in a retrieval system, or translated into any language in any form or by any means, except documentation kept by the purchaser for backup purposes, without the express written permission of ASUSTeK COMPUTER INC. (“ASUS”).

Product warranty or service will not be extended if: (1) the product is repaired, modified or altered, unless such repair, modification of alteration is authorized in writing by ASUS; or (2) the serial number of the product is defaced or missing.

ASUS PROVIDES THIS MANUAL “AS IS” WITHOUT WARRANTY OF ANY KIND, EITHER EXPRESS OR IMPLIED, INCLUDING BUT NOT LIMITED TO THE IMPLIED WARRANTIES OR CONDITIONS OF MERCHANTABILITY OR FITNESS FOR A PARTICULAR PURPOSE. IN NO EVENT SHALL ASUS, ITS DIRECTORS, OFFICERS, EMPLOYEES OR AGENTS BE LIABLE FOR ANY INDIRECT, SPECIAL, INCIDENTAL, OR CONSEQUENTIAL DAMAGES (INCLUDING DAMAGES FOR LOSS OF PROFITS, LOSS OF BUSINESS, LOSS OF USE OR DATA, INTERRUPTION OF BUSINESS AND THE LIKE), EVEN IF ASUS HAS BEEN ADVISED OF THE POSSIBILITY OF SUCH DAMAGES ARISING FROM ANY DEFECT OR ERROR IN THIS MANUAL OR PRODUCT.

SPECIFICATIONS AND INFORMATION CONTAINED IN THIS MANUAL ARE FURNISHED FOR INFORMATIONAL USE ONLY, AND ARE SUBJECT TO CHANGE AT ANY TIME WITHOUT NOTICE, AND SHOULD NOT BE CONSTRUED AS A COMMITMENT BY ASUS. ASUS ASSUMES NO RESPONSIBILITY OR LIABILITY FOR ANY ERRORS OR INACCURACIES THAT MAY APPEAR IN THIS MANUAL, INCLUDING THE PRODUCTS AND SOFTWARE DESCRIBED IN IT.

Products and corporate names appearing in this manual may or may not be registered trademarks or copyrights of their respective companies, and are used only for identification or explanation and to the owners’ benefit, without intent to infringe.

Notices

Federal Communications Commission Statement

This device complies with Part 15 of the FCC Rules. Operation is subject to the following two conditions:

- This device may not cause harmful interference, and
- This device must accept any interference received including interference that may cause undesired operation.

This equipment has been tested and found to comply with the limits for a Class B digital device, pursuant to Part 15 of the FCC Rules. These limits are designed to provide reasonable protection against harmful interference in a residential installation. This equipment generates, uses and can radiate radio frequency energy and, if not installed and used in accordance with manufacturer's instructions, may cause harmful interference to radio communications. However, there is no guarantee that interference will not occur in a particular installation. If this equipment does cause harmful interference to radio or television reception, which can be determined by turning the equipment off and on, the user is encouraged to try to correct the interference by one or more of the following measures:

- Reorient or relocate the receiving antenna.
- Increase the separation between the equipment and receiver.
- Connect the equipment to an outlet on a circuit different from that to which the receiver is connected.
- Consult the dealer or an experienced radio/TV technician for help.

Canadian Department of Communications Statement

This digital apparatus does not exceed the Class B limits for radio noise emissions from digital apparatus set out in the Radio Interference Regulations of the Canadian Department of Communications.

This class B digital apparatus complies with Canadian ICES-003.

The device may fall, causing serious personal injury or death. To prevent injury, this device must be securely attached to the floor/wall in accordance with the installation instructions.

EAC

Declaration of Conformity

This device complies with the requirements set out in the Council Directive on the Approximation of the Laws of the Member States relating to Electromagnetic Compatibility (2014/30/EU), Low-voltage Directive (2014/35/EU), REGULATION (EU) 2024/1781 and RoHS directive (2011/65/EU). This product has been tested and found to comply with the harmonized standards for Information Technology Equipment, these harmonized standards published under Directives of Official Journal of the European Union.

WEEE Symbol Statement

This symbol on the product or on its packaging indicates that this product must not be disposed of with your other household waste. Instead, it is your responsibility to dispose of your waste equipment by handing it over to a designated collection point for the recycling of waste electrical and electronic equipment. The separate collection and recycling of your waste equipment at the time of disposal will help to conserve natural resources and ensure that it is recycled in a manner that protects human health and the environment. For more information about where you can drop off your waste equipment for recycling, please contact your local city office, your household waste disposal service or the shop where you purchased the product.

EEE yönetmeliğine uygundur

Safety information

- Before setting up the monitor, carefully read all the documentation that came with the package.
- To prevent fire or shock hazard, never expose the monitor to rain or moisture.
- Never try to open the monitor cabinet. The dangerous high voltages inside the monitor may result in serious physical injury.
- If the power supply is broken, do not try to fix it by yourself. Contact a qualified service technician or your retailer.
- Before using the product, make sure all cables are correctly connected and the power cables are not damaged. If you detect any damage, contact your dealer immediately.
- Slots and openings on the back or top of the cabinet are provided for ventilation. Do not block these slots. Never place this product near or over a radiator or heat source unless proper ventilation is provided.
- The monitor should be operated only from the type of power source indicated on the label. If you are not sure of the type of power supply to your home, consult your dealer or local power company.
- Use the appropriate power plug which complies with your local power standard.
- Do not overload power strips and extension cords. Overloading can result in fire or electric shock.
- Avoid dust, humidity, and temperature extremes. Do not place the monitor in any area where it may become wet. Place the monitor on a stable surface.
- Unplug the unit during a lightning storm or if it will not be used for a long period of time. This will protect the monitor from damage due to power surges.
- Never push objects or spill liquid of any kind into the slots on the monitor cabinet.
- To ensure satisfactory operation, use the monitor only with UL listed computers which have appropriate configured receptacles marked between 100 ~ 240V AC.
- The socket-outlet shall be installed near the equipment and shall be easily accessible
- If you encounter technical problems with the monitor, contact a qualified service technician or your retailer.
- Provide an earthing connection before the mains plug is connected to the mains. And, when disconnecting the earthing connection, be sure to disconnect after pulling out the mains plug from the mains.

WARNING

Usage of other than specified head- or earphones can result in hearing loss due to excessive sound pressures.

Please confirm the distribution system in building installation shall provide the circuit breaker rated 120/240V, 20A (maximum).

If provided with a 3-pin attachment plug on the power cord, plug the cord into a grounded (earthed) 3-pin outlet. Do not disable the power cord grounding pin, for example, by attaching a 2-pin adapter. The grounding pin is an important safety feature.

Stability Hazard.

The product may fall, causing serious personal injury or death. To prevent injury, this product must be securely attached to the floor/wall in accordance with the installation instructions.

A product may fall, causing serious personal injury or death. Many injuries, particularly to children, can be avoided by taking simple precautions such as:

ALWAYS use cabinets or stands or installation methods recommended by the manufacturer of the product set.

ALWAYS use furniture that can safely support the product.

ALWAYS ensure the product is not overhanging the edge of the supporting furniture.

ALWAYS educate children about the dangers of climbing on furniture to reach the product or its controls.

ALWAYS route cords and cables connected to your product so they cannot be tripped over, pulled or grabbed.

NEVER place a product in an unstable location.

NEVER place the product on tall furniture (for example, cupboards or bookcases) without anchoring both the furniture and the product to a suitable support.

NEVER place the product on cloth or other materials that may be located between the product and supporting furniture.

NEVER place items that might tempt children to climb, such as toys and remote controls, on the top of the product or furniture on which the product is placed.

If the existing product is going to be retained and relocated, the same considerations as above should be applied.

Excessive sound pressure from earphones and headphones can cause hearing loss. Adjustment of the equalizer to maximum increases the earphones and headphones output voltage and therefore the sound pressure level.

Restriction on Hazardous Substances statement (India) This product complies with the “India E-Waste (Management) Rules, 2016” and prohibits use of Lead, Mercury, Hexavalent Chromium, polybrominated biphenyls(PBBs) and polybrominated diphenyl ethers(PBDEs) in concentration exceeding 0.1% by weight in homogenous materials and 0.01% by weight in homogenous materials for cadmium, except of exemptions listed in Schedule 2 of the Rule.

■ ASUS CONTACT INFORMATION

- ASUSTeK Computer Inc.

Address	1F., No. 15, Lide Rd., Beitou Dist., Taipei City 112, Taiwan
Telephone	+886-2-2894-3447
Fax	+886-2-2894-7798
E-mail	info@asus.com.tw
Website	http://www.asus.com.tw/

- Technical Support

Telephone	+86-21-38429911

- ASUS Computer International (America)

Address	48720 Kato Rd, Fremont, CA 94538, USA
Telephone	+1-510-739-3777
Fax	+1-510-608-4555
Website	http://usa.asus.com/

- Technical Support

Telephone	+1-812-282-2787 (English Only)
	+1-905-370-2787 (French Only)
Online Support	http://support.asus.com/

- ASUS Computer GmbH (Germany and Austria)

Address	Harkortstr. 21-23 D-40880 Ratingen, Germany
Telephone	+49-1805-010920
Website	http://www.asus.de/
Online Contact	http://www.asus.de/sales

- Technical Support

Telephone	+49-1805-010923
Support Fax	+49-2102-959911
Online Support	http://support.asus.com/

Care & Cleaning

- Before you lift or reposition your monitor, it is better to disconnect the cables and power cord. Follow the correct lifting techniques when positioning the monitor. When lifting or carrying the monitor, grasp the edges of the monitor. Do not lift the display by the stand or the cord.
- Cleaning. Turn your monitor off and unplug the power cord. Clean the monitor surface with a lint-free, non-abrasive cloth. Stubborn stains may be removed with a cloth dampened with mild cleaner.
- Avoid using a cleaner containing alcohol or acetone. Use a cleaner intended for use with the LCD. Never spray cleaner directly on the screen, as it may drip inside the monitor and cause an electric shock.

The following symptoms are normal with the monitor:

- The screen may flicker during the initial use due to the nature of the fluorescent light. Turn off the Power Switch and turn it on again to make sure that the flicker disappears.
- You may find slightly uneven brightness on the screen depending on the desktop pattern you use.
- When the same image is displayed for hours, an afterimage of the previous screen may remain after switching the image. The screen will recover slowly or you can turn off the Power Switch for hours.
- When the screen becomes black or flashes, or cannot work anymore, contact your dealer or service center to fix it. Do not repair the screen by yourself!

Conventions used in this guide

WARNING: Information to prevent injury to yourself when trying to complete a task.

CAUTION: Information to prevent damage to the components when trying to complete a task.

IMPORTANT: Information that you MUST follow to complete a task.

NOTE: Tips and additional information to aid in completing a task.

Where to find more information

Refer to the following sources for additional information and for product and software updates.

1. **ASUS websites**

   The ASUS websites worldwide provide updated information on ASUS hardware and software products. Refer to **http://www.asus.com**

2. **Optional documentation**

   Your product package may include optional documentation that may have been added by your dealer. These documents are not part of the standard package.

3. **Protect your eyes with ASUS EYE CARE Monitors**

   The latest ASUS monitors feature exclusive Blue Light Filter and Flicker free technologies to keep your eyes healthy in today's digital world. Refer to **https://www.asus.com/Microsite/display/eye_care_technology/**

Takeback Services

ASUS recycling and takeback programs come from our commitment to the highest standards for protecting our environment. We believe in providing solutions for our customers to be able to responsibly recycle our products, batteries and other components as well as the packaging materials.

Please go to http://csr.asus.com/english/Takeback.htm for detail recycling information in different region.

Product information for EU energy label

VG27AQL5F

1.1 Welcome!

Thank you for purchasing the ASUS® LCD monitor!

The latest widescreen LCD monitor from ASUS provides a crisper, broader, and brighter display, plus a host of features that enhance your viewing experience.

With these features, you can enjoy the convenience and delightful visual experience that the monitor brings you!

1.2 Package contents

Check your package for the following items:

- ✓ LCD Monitor
- ✓ Monitor Stand
- ✓ Monitor Base
- ✓ Quick Start Guide
- ✓ Warranty Card
- ✓ Power Cord
- ✓ HDMI Cable (Optional)
- ✓ DP Cable

- If any of the above items is damaged or missing, contact your retailer immediately.

1.3 Assembling the monitor

To assemble the monitor:

1. Connect the stand with the vesa cover, then secure it to the vesa mounting area until the latch locks the stand in place.
2. Fix the base to the arm by fastening the bundled screw.

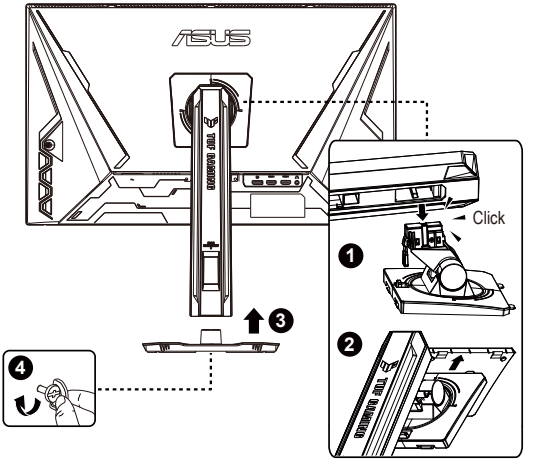

*Base screw size:M6 x 25mm

1.4 Detaching the arm/stand (for VESA wall mount)

The detachable stand of this monitor is specially designed for VESA wall mount.

To detach the arm/stand:

1. Disconnect power and signal cables. Carefully put the front of the monitor face down on a clean table coverd with a soft cloth to avoid damage.
2. Loosen the screws with your fingers and remove the base from the monitor.
3. Push the lock clip on the vesa cover inward to remove the stand with the vesa cover from the monitor.
4. Hold the stand with both hands, tilt the base and slide it out.
5. Push the lock clip inward to remove the stand from the vesa cover.

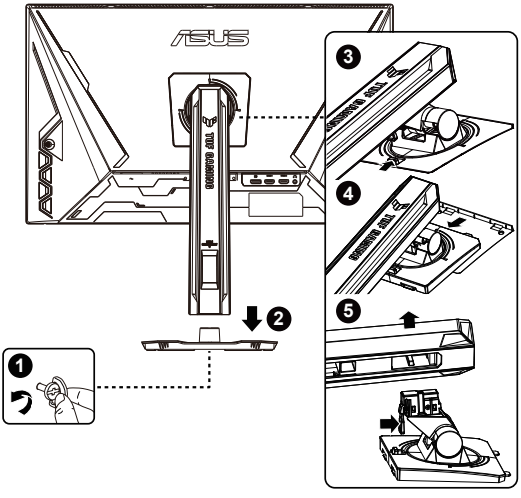

- The VESA wall mount kit (100 x 100 mm) is purchased separately.
- Use only the UL Listed Wall Mount Bracket with minimum weight/load 28.8 kg (Screw size: M4 x 8mm).

1.5 Cable management(include I/O port)

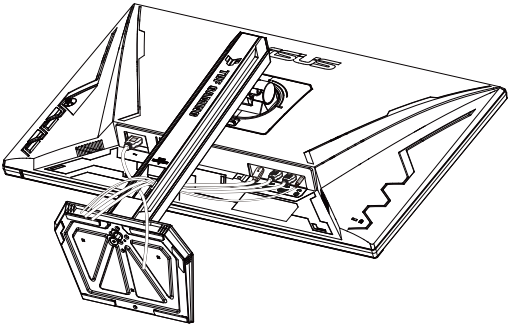

- **Arranging the cables**

  You can organize the cables with the help of the cable management hole.

- **To connect the HDMI/DisplayPort cable:**

  a. Plug one end of the HDMI/DisplayPort cable to the monitor's HDMI/DisplayPort jack.

  b. Connect the other end of the HDMI/DisplayPort cable to your device's HDMI/DisplayPort jack.

When these cables are connected, you can choose the desired signal from the Input Select item in the OSD menu.

If you need to replace the power cord or the connection cable(s), please contact ASUS customer service.

1.6 Adjusting the monitor

- For optimal viewing, we recommend that you look at the full face of the monitor, then adjust the monitor to the angle that is most comfortable for you.
- Hold the stand to prevent the monitor from falling when you change its angle.
- Adjust the monitor follow the pictures for the most comfortable viewing for you.

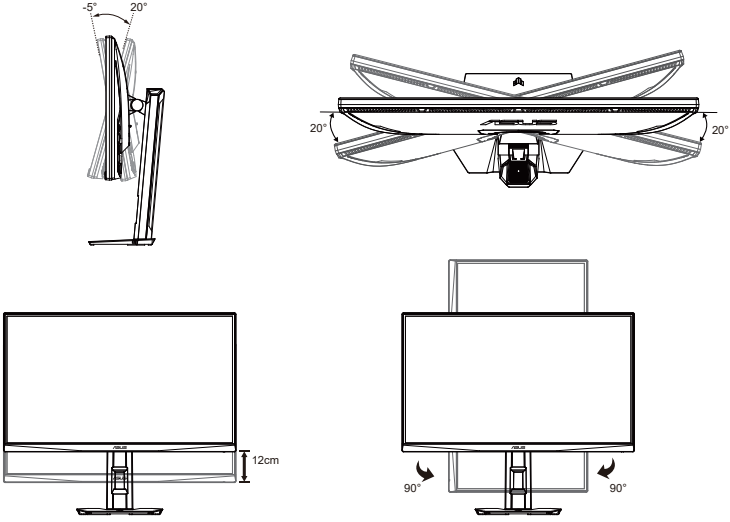

2.1 Monitor introduction

2.1.1 Front view

Use the control button on the back of the monitor to adjust the image settings.

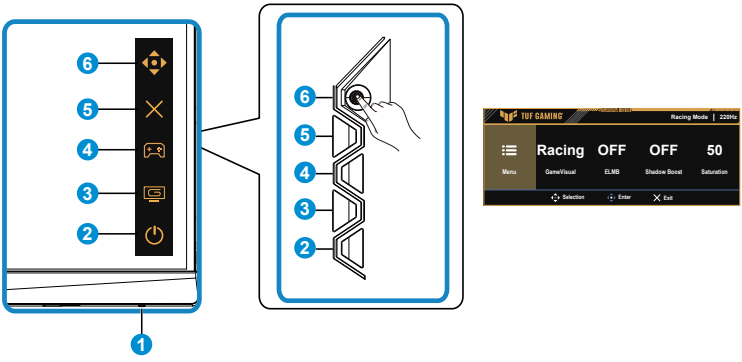

1. Power Indicator:
   - The color definition of the power indicator is as the below table.

Status	Description
White	ON
Amber	Standby mode
OFF	OFF

2. ⏻ Power Button:
   - Press this button to turn the monitor on/off.

3. GameVisual Button:

   This is shortcut 2.

   - Press this Shortcut to switch from nine video preset modes (Scenery Mode, Racing Mode, Cinema Mode, RTS/RPG Mode, FPS Mode, sRGB Mode, MOBA Mode, Night Vision and User Mode) with GameVisual™ Video Intelligence Technology.

4. GamePlus Button:

   This is shortcut 1

   - **GamePlus**: The GamePlus Function provides a toolkit and creates a better gaming environment for users when playing different types of games. Particularly, Crosshair function is specially designed for new gamers or beginners interested in First Person Shooter (FPS) games.

     To active GamePlus:

     - Press **GamePlus** Button to enter the GamePlus main menu.

- Active FPS Counter, Crosshair, Sniper, Timer, Stopwatch or Display Alignment.
- Move the button up/down to select and press to confirm the function needed. Press ✕ to go off, and exit.
- Crosshair/Timer/Stopwatch/FPS Counter is movable by pressing 5-way key.

GamePlus main menu	GamePlus-FPS Counter	GamePlus-Crosshair
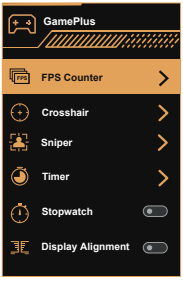	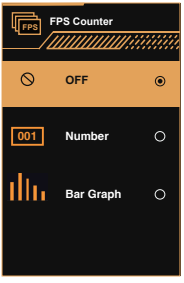	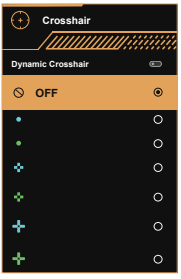

GamePlus-Sniper	GamePlus-Timer	
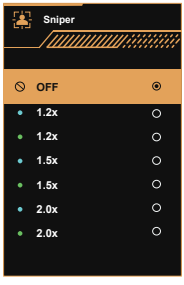	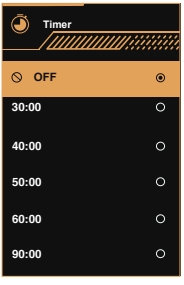	

5. ✕ Close Button:
   - Exit the OSD menu.
6. (5-way) Button:
   - Turn on the OSD menu. Enact the selected OSD menu item.
   - Increase/Decrease values or moves your selection up/down/left/right

2.1.2 Back view

Rear of the LCD monitor

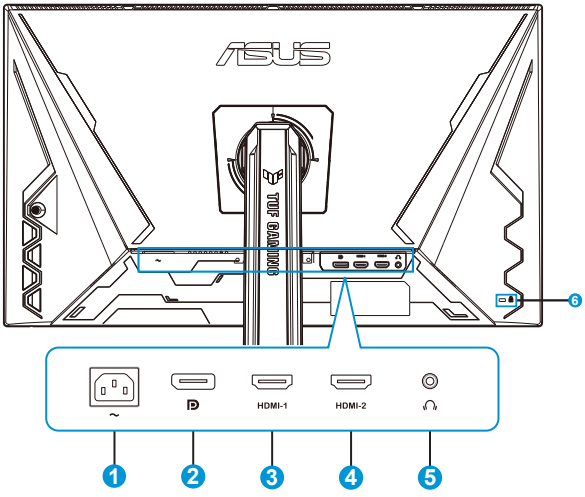

1. AC-IN Port
2. DP - in Port
3. HDMI-1 Port
4. HDMI-2 Port
5. Earphone - out Port
6. Kensington Lock

3.1 OSD (On-Screen Display) menu

3.1.1 How to reconfigure

The 5-way controller is located at the rear of the monitor. While sitting in front of the monitor, move the controller to the directions instructed by the on-screen icons for menu navigation and operations.

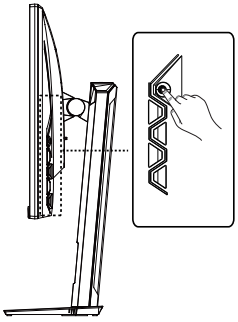

Press the (5-way) button to activate the OSD menu.

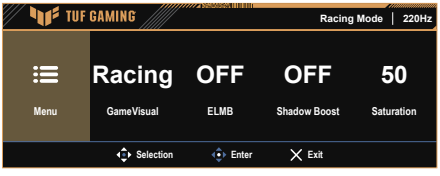

- When the Quick Menu is activated

OSD (On Screen Display) icon	5-way controller operation	Function
Quick Menu	Move left / right	Switches to the previous / next menu setting.
	Move up / down	Selects the previous / next menu item.
		Selects the desired parameter
	Press (center)	Confirms the selection

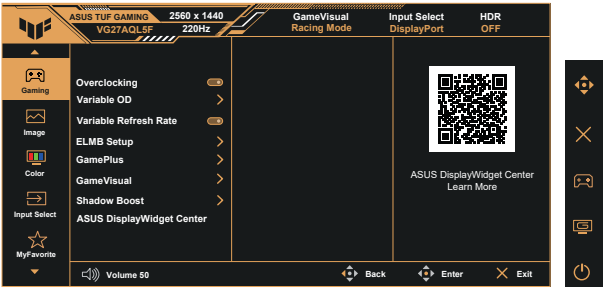

- When the Menu is activated

OSD (On Screen Display) icon	5-way controller operation	Function
Menu	Move up / down	Selects the previous / next menu item.
		Selects the desired parameter
	Move left / right	Switches to the left / right menu.
	Press (center)	Confirms the selection

Customizing the Quick Menu

The Quick Menu contains four customizable shortcuts that allow fast access to frequently used settings. You may change these shortcuts as desired.

1. Press the 5-way controller to bring up the Quick Menu.

2. Navigate to Menu > My Favorite > Quick Menu.

3. Select Mode 1, Mode 2, Mode 3, or Mode 4 to set a function.

-To keep the Quick Menu shorter, select None to hide that shortcut.

-Do not select the same function to multiple positions.

-A shortcut will appear grayed out if it is not supported under the current mode.

3.1.2 OSD Function Introduction

Set **Power Setting** to **Performance Mode** to enable function.

3.1.2.1 Gaming

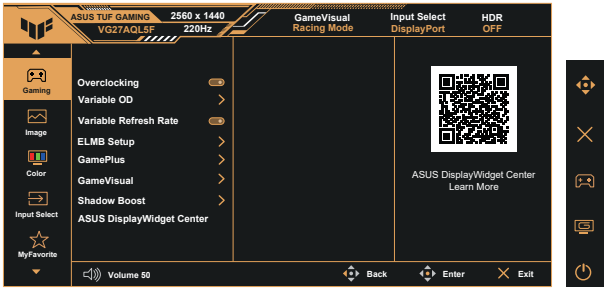

Menu Option		Description	Remark
Overclocking	On/Off	Enabling overclocking allows the monitor to reach its maximum supported refresh rate(220Hz for DP , 150Hz for HDMI), delivering smoother and more responsive visuals.	1.Overclocking may cause screen fickering. To reduce such effects, disconnect the cable and use the monitor OSD to try again with a safer Max Refresh Rate. 2.Overclocking ability is dependent on the graphics card.
Variable OD	Level 5 / Level 4 / Level 3 / Level 2 / Level 1 / OFF	Improves screen response time with 5 adjustable Over Drive levels, making fast-moving scenes look sharper and smoother.	
Variable Refresh Rate	On/Off	Works with Adaptive-Sync, G-Sync Compatible, and FreeSync graphics sources to dynamically match the display's refresh rate to content frame rates. This reduces stutter and input lag while saving power.	1. When the input source is DP, Variable Refresh Rate can only be activated within 48Hz~200Hz when Overclocking is OFF, 48Hz~220Hz when Overclocking is ON. 2. When the input source is HDMI, Variable Refresh Rate can only be activated within 48Hz~144Hz when Overclocking is OFF, 48Hz~150Hz when Overclocking is ON. 3.For supported GPUs, minimum PC system and driver requirements, please contact the GPU manufactures. 4.When Variable Refresh Rate is enabled, the following functions will be unavailable : ELMB.

<table>
<tr><th colspan="2">Menu Option</th><th>Description</th><th>Remark</th></tr>
<tr><td>ELMB Setup</td><td>ELMB</td><td rowspan="4">The ELMB Setup menu allows users to configure motion blur reduction features for fast-moving content. It includes ELMB and ELMB Sync, depending on the input signal and refresh rate conditions.

<u>ELMB</u>

ELMB eliminates screen tearing, reduces ghosting, and minimizes motion blur during gameplay.

<u>ELMB Sync</u>

ELMB SYNC allows you to enable motion blur reduction while Variable Refresh Rate (VRR) is ON.

It helps eliminate screen tearing, reduce ghosting, and minimize motion blur during fast-paced gameplay.

<u>Clarity Level</u>

Adjusts the sharpness level of the ELMB effect.

There are 5 clarity levels available, allowing you to fine-tune motion clarity based on your preference.

<u>Clarity Position</u>

Adjusts where the blur-reduction effect appears on screen.

Choose from 3 levels — Top, Middle, or Bottom — to match different types of content.</td><td>1.To activate ELMB, please turn off VRR first.

2.Requires refresh rate higher than 85Hz.

3.When ELMB is enabled, the following functions will be unavailable:Variable Refresh Rate,ELMB Sync,Brightness ,Aspect Control ,ASCR,Blue Light Filter,Variable OD,HDR Setting,Sniper.</td></tr>
<tr><td>ELMB Setup</td><td>ELMB SYNC</td><td>1.When ELMB sync is enabled, the following functions will be unavailable:ELMB ,Brightness ,Aspect Control ,ASCR,Blue Light Filter ,HDR Setting.</td></tr>
<tr><td>ELMB Setup</td><td>Clarity Level</td><td rowspan="2">1.When Clarity Level or Clarity Position is enabled, the following functions will be unavailable: Variable Refresh Rate,ELMB Sync,Brightness ,Aspect Control,ASCR,Blue Light Filter ,Variable OD,HDR Setting.</td></tr>
<tr><td>ELMB Setup</td><td>Clarity Position</td></tr>
</table>

Menu Option		Description	Remark
GamePlus	FPS Counter	The GamePlus function provides a set of built-in gaming tools to enhance your in-game experience. It includes the following features: <u>FPS Counter</u> Displays real-time frames per second (FPS) to indicate how smoothly the game is running. You can choose to show the FPS as a number or a bar graph on screen. <u>Crosshair</u> Provides 6 built-in crosshair styles, so you can choose the one that best fits your game. Also includes a Dynamic Crosshair option that adjusts the crosshair automatically based on gameplay. <u>Sniper</u> Sniper mode is designed for first-person shooter games (only available when HDR is OFF). You can choose from three magnification levels — 1.2×, 1.5×, and 2.0× — with different alignment styles. <u>Timer</u> Displays a countdown timer on the upper-left corner of the screen to help you track gameplay or rest time. You can choose from the following preset durations:30:00, 40:00, 50:00, 60:00, or 90:00 minutes. <u>Stopwatch</u> Displays a stopwatch on the upper-left corner of the screen to help you track elapsed time during gameplay or activities. The stopwatch starts from 00:00 and counts upward until manually stopped. <u>Display Alignment</u> Displays alignment lines on all four sides of the screen to help you align multiple monitors more precisely and easily.	
GamePlus	Crosshair		
GamePlus	Sniper		
GamePlus	Timer		
GamePlus	Stopwatch		
GamePlus	Display Alignment		

Menu Option		Description	Remark
GameVisual	Scenery Mode	GameVisual provides a set of preset display modes optimized for different usage scenarios, using ASUS GameVisual™ Video Intelligence Technology. Easily switch between modes to match your content. Scenery Mode Optimized for displaying landscapes and outdoor photos. Racing Mode Best suited for fast-paced racing games. Cinema Mode Ideal for watching movies and cinematic content. RTS/RPG Mode Designed for Real-Time Strategy and Role-Playing games. FPS Mode Tailored for First-Person Shooter games to enhance visibility in dark scenes. sRGB Mode Perfect for viewing photos and graphics with accurate color reproduction. MOBA Mode Best choice for Multiplayer Online Battle Arena games. Night Vision Enhances visibility in dark environments or low-light scenes. User Mode Allows manual adjustment of more image settings like brightness, contrast, and color.	
GameVisual	Racing Mode		
GameVisual	Cinema Mode		
GameVisual	RTS/RPG Mode		
GameVisual	FPS Mode		
GameVisual	sRGB Mode		
GameVisual	MOBA Mode		
GameVisual	Night Vision		
GameVisual	User Mode		
Shadow Boost	Dynamic Shadow Boost/Level 3/Level 2/ Level 1/Off	Enhances visibility in dark areas by adjusting the monitor's gamma curve, making dark scenes and objects easier to see without overexposing brighter areas. Offers three levels (Level 1 / 2 / 3) of adjustment to suit different preferences. Includes a Dynamic Shadow Boost option that automatically optimizes dark scenes based on the content.	
ASUS DisplayWidget Center	QRcode	Refer to Chapter 3.2	

3.1.2.2 Image

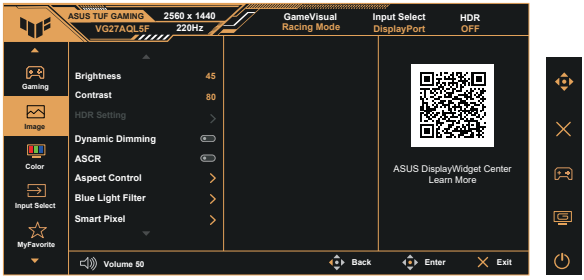

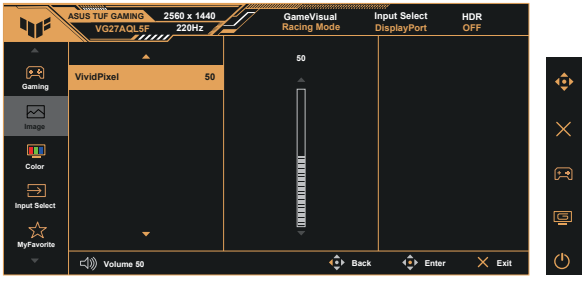

Menu Option		Description	Remark
Brightness	Adjustable from 0~100	Adjust screen brightness. When HDR is enabled, only adjustment via Adjustable HDR is supported.	ELMB function not supported.
Contrast	Adjustable from 0~100	Adjust contrast to enhance image detail and depth.	Not adjustable in HDR mode.
HDR Setting	Gaming HDR	Function Description: Delivers richer details and more realistic colors, especially noticeable in scenes with strong contrast between light and dark areas. Gaming HDR: A mode designed for gamers. Cinema HDR: Ideal for movies and cinematic content. Console HDR:Tailored for gaming consoles.	1. In HDR mode, brightness is adjusted automatically and cannot be set manually. 2. When HDR is enabled,the following functions are unavailable: ELMB、Sniper、GameVisual、Shadow Boost、Brightness、Contrast、Blue Light Filter、ASCR、Color Temp.、Saturation、Power Saving.
HDR Setting	Cinema HDR		
HDR Setting	Console HDR		

Menu Option		Description	Remark
HDR Setting	Brightness Adjustable	By default, brightness in HDR mode is automatic. Enabling this feature allows manual brightness adjustment.	
Dynamic Dimming	On/Off	Enhances screen visual quality and energy efficiency. When enabled, this feature automatically adjusts the backlight brightness to deliver a more vivid and realistic image while also saving power.	Only supports local dimming. Default is OFF in SDR mode; ON in HDR mode.
ASCR	On/Off	Dynamically adjusts contrast, ideal for videos or high-dynamic scenes, enhancing the depth and layering of the image.	When this feature is enabled, ELMB, ELMB SYNC, and ELMB settings cannot be used.
Aspect Control	16:9 Full	Fills the screen by stretching the image without preserving the aspect ratio. The image becomes larger but may distort, affecting the viewing experience.	1. The 16:9 aspect ratio achieves better results only when the full-screen resolution simulates a 24.5-inch display. 2. FPS game size; you can also select point-to-point scaling in Windows display settings. 3. When this feature is enabled, the following functions will be disabled: VRR, ELMB, ELMB SYNC.
Aspect Control	16:9 24.5" Simulation	Displays the image at a 24.5-inch size, maintaining the aspect ratio without distortion, but the image appears smaller.	
Aspect Control	16:9 Pixel by Pixel	16:9 native mode maps pixels directly, keeping clarity and aspect ratio. Low resolution images may show black borders.	
Aspect Control	Square Full	Stretches the image to fill the entire screen without preserving the aspect ratio. The image becomes larger but may be distorted, affecting the viewing experience.	
Aspect Control	Square Equivalent	Scales the image up while maintaining the original aspect ratio to avoid distortion, but may result in black borders.	
Aspect Control	Square Pixel by Pixel	Displays the image at its original resolution without scaling or stretching.	

Menu Option		Description	Remark
Blue Light Filter	Level4/ Level3/ Level2/ Level1/OFF	1. Levels 1 to 4: The higher the level, the stronger the blue light filtering effect, resulting in less blue light scattering. 2. Level and brightness adjustment: Users can adjust brightness between levels 1 and 3. 3. Level 4 is the default optimal setting, compliant with TÜV low blue light certification standards, but brightness cannot be adjusted.	1. When this feature is enabled, the following functions will be disabled: ELMB, ELMB SYNC. 2. When this feature is enabled, the system will automatically apply the default settings of Competition Mode.
Smart Pixel	Level3/ Level2/ Level1/OFF	Smart Pixel enhances overall image details in real time for clearer and more vivid visuals.	
VividPixel	Adjustable from 0~100	Enhances image edges and details to improve image clarity.	

3.1.2.3 Color

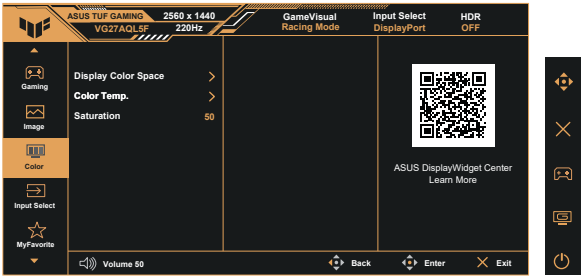

Menu Option			Description	Remark
Display Color Space	sRGB	-	Selects the color space for the monitor color output.	
Display Color Space	DCI-P3	-		
Display Color Space	Wide Gamut	-		
Color Temp.	Warm	-	Contains 4 modes including Warm, Normal, Cool and User.	-
Color Temp.	Normal	-		-
Color Temp.	Cool	-		-
Color Temp.	User	R Adjustable from 0~100		Supports user-adjustable color temperature settings.
Color Temp.	User	G Adjustable from 0~100		
Color Temp.	User	B Adjustable from 0~100		
Saturation	Adjustable from 0~100	-	The adjusting range is from 0 to 100.	

3.1.2.4 Input Select

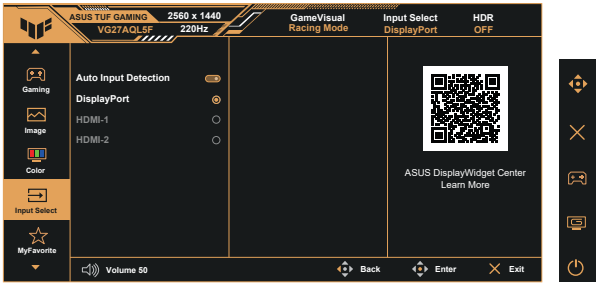

Menu Option		Description	Remark
Auto Input Detection	On / Off	Once turned on, it automatically detects the signal and switches the input source.	
DisplayPort	Choose the input source as needed.	Select DisplayPort as the video input source.	
HDMI-1		Select HDMI-1 as the video input source.	
HDMI-2		Select HDMI-2 as the video input source.	

3.1.2.5 MyFavorite

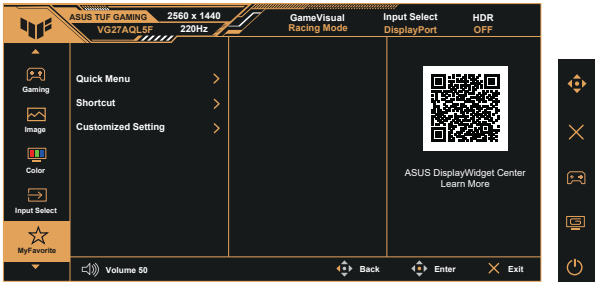

Menu Option		Description	Remark
Quick Menu	Mode1 or Mode2 or Mode3 or Mode4	The Quick Menu lets you assign your favorite monitor settings to four modes (Mode 1–4) for faster access during use.	
Shortcut	Shortcut 1 or Shortcut 2	Configure the functions of the monitor's shortcut keys.	
Customized Setting	Customized Setting 1 or Customized Setting 2	Load or save all monitor settings to quickly switch between different usage scenarios.	

3.1.2.6 System Setup

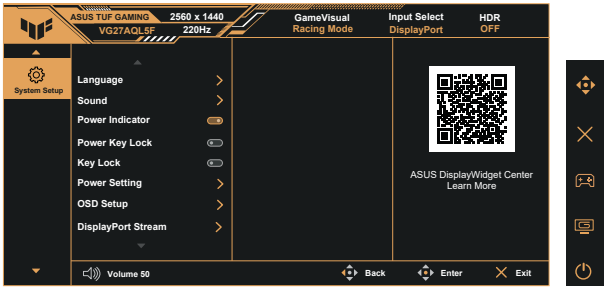

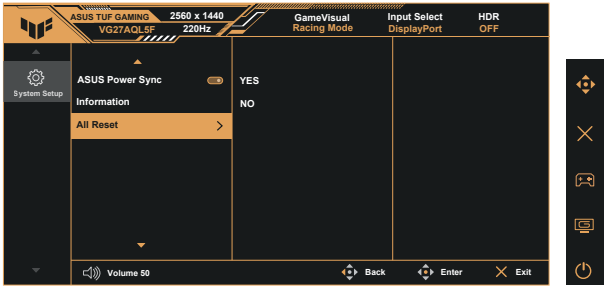

Menu Option		Description	Remark
Language	Language Selection	Supports 23 languages: English, French, German, Italian, Spanish, Dutch, Portuguese, Russian, Czech, Croatian, Polish, Romanian, Hungarian, Turkish, Simplified Chinese, Traditional Chinese, Japanese, Korean, Thai, Indonesian, Persian, Ukrainian, and Vietnamese.	
Sound	Volume	Adjustable from 0~100	
	Mute	Switch the monitor sound on or off.	
Power Indicator	On/Off	Switch the power LED indicator on or off.	
Power Key Lock	On/Off	Turn the power button on or off.	
Key Lock	On/Off	All function keys are disabled. To unlock, press and hold the down key on the five-way button for five seconds.	

Menu Option		Description	Remark
Power Setting	Performance Mode	Offers better performance but consumes more power.	
	Power Saving Mode	Limits brightness and features to save energy. HDR must be turned off before enabling this; a reminder will appear when adjusting brightness.	
OSD Setup	OSD Position	Adjust the horizontal and vertical position of the OSD menu.	
	OSD Timeout	Adjust the menu display duration between 10 and 120 seconds.	
	Transparency	Adjust the OSD background transparency.	
	DDC/CI	Turn on or off the communication between the monitor and computer (auto-enabled with variable refresh rate).	
DisplayPort Stream	DisplayPort 1.2 or DisplayPort 1.4	Select DisplayPort 1.2 or DisplayPort 1.4 based on the graphics card.	
ASUS Power Sync	On/Off	Automatically powers the monitor and connected devices on or off (compatible with Apple TV, PlayStation, Xbox, Switch, and more).	
Information	-	Displays the current resolution, refresh rate, and other information of the monitor.	
All Reset	Yes or No	Reset all settings to their factory default values.	

3.2 Display Widget Center

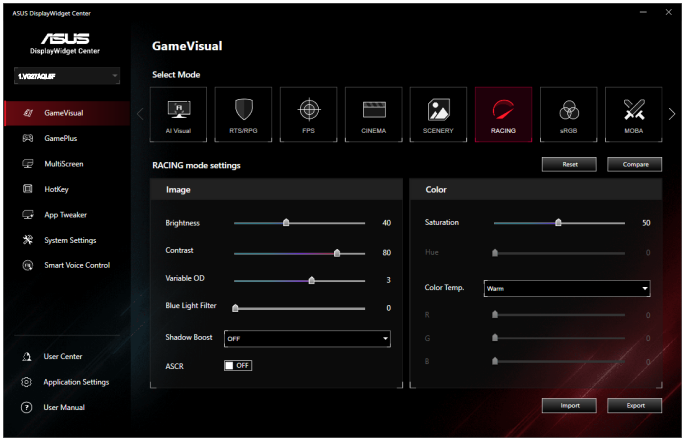

ASUS DisplayWidget Center is a Windows-based utility designed for ASUS monitors. It allows users to adjust monitor settings directly from their desktop using a mouse, eliminating the need for on-screen display (OSD) buttons. It streamlines configuration of color, brightness, contrast, and other advanced features.

System Requirements

*Operating System: Windows 10 (64-bit) or Windows 11 (64-bit)

*Supported Models: Please check the driver section on the ASUS Support Site(https://www.asus.com/support/) by entering your monitor model.

How to Download and Install

1. Go to the ASUS DisplayWidget Center download page.
2. Enter your monitor model in the search bar (e.g., VG27AQL5F).
3. Select Driver & Utility → Choose your OS version.
4. Download and unzip the DisplayWidget Center installer.
5. Run the setup file and follow the installation steps.
6. Once installed, the shortcut icon will appear on your desktop.

Key Features

1. GameVisual Modes: Change between Scenery, Racing, Cinema, FPS, RPG, and other color presets.

2. GamePlus Tools: Activate crosshairs, FPS counter, sniper, timer, and display alignment tools.

3. Color Adjustment: Fine-tune brightness, contrast, saturation, and gamma directly from your PC.

4. Multi-Screen Tools: Organize and divide your desktop workspace with layout presets.

5. Hotkey Customization: Assign shortcuts for quick access to settings.

6. App Sync: Automatically switch monitor settings based on running applications.

7. Device & System Info: View real-time system and monitor information.

Tips for Users

1. Always check for the latest version through the official ASUS website.

2. If you change monitor models, reinstalling the tool may be necessary.

3. Some features may vary depending on your monitor model and panel type.

3.3 Specifications summary

Model	VG27AQL5F	VG27AQL5F-W
Chassis Colors	Black	White
Panel Type	LCD	
Backlight Type	ELED	
Panel Size	27” W (68.5 cm)	
Recommend Resolution	2560 x 1440	
Refresh Rate	220Hz	
Aspect Ratio	16:9	
Brightness (Typ.)	350nits (Typ.) , 400nits (HDR)	
Color Space (DCIP3)	DCI-P3 95%	
Intrinsic Contrast Ratio (Typ.)	1300:1	
Viewing Angle (CR>10)	178°(V) /178°(H)	
Display Colors	1.07B colors (10bits)**	
Response Time	1ms (GTG), 0.3ms (min.)	
WHQL	Windows 10/11	
Digital signal Frequency	DP: 360KHz to 360KHz(H) / 48Hz to 220Hz(V) HDMI: 30KHz to 250KHz(H) / 48Hz to 150Hz(V)	
Power Consumption	21W***	
Power saving mode	< 0.5W	
Power off mode	< 0.3W	
Voltage	100~240V, 50/60Hz, 1.5A	
Temperature (operating)	0 ~ 40°	
Tilt	-5° ~ +20°	
Swivel	-20° ~ +20°	
Pivot	-90° ~ +90°	
Height Adjustment	120 mm	
I/O Port	HDMI v2.1 (TMDS) x 2, DisplayPort v1.2 (HBR2) x 1	
Speaker	2W x 2 stereo	
Phys. Dimension with stand (WxHxD)	61.53 x 53.51 x 19.39 cm	
Phys. Dimension without stand (WxHxD)	61.53 x 36.89 x 5.94 cm	
Box Dimension (WxHxD)	68.0 x 51.5 x 14.8 cm	

Net Weight (Esti.)	6.0 kg
Net Weight without stand	4.0 kg
Gross Weight (Esti.)	7.8 kg

*** Specifications are subject to change without notice.**

**** 10-bit color support is subject to system configuration, timing settings, and DisplayPort bandwidth limitations.**

***** Measuring a screen brightness of 200 nits without audio/USB/Card reader connection.**

3.4 Outline dimension

Unit: cm [inch]

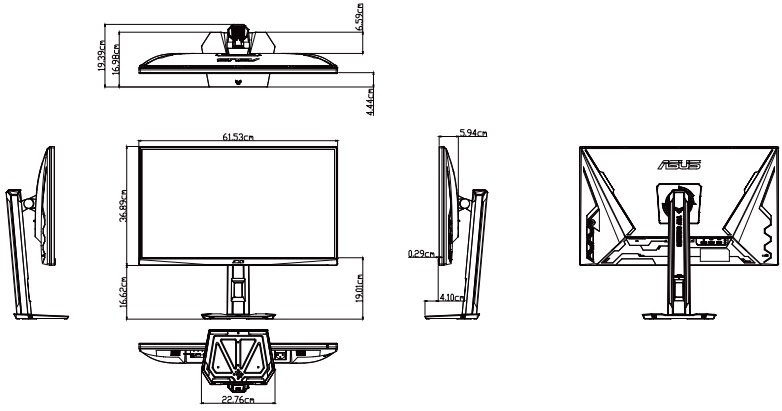

3.5 Troubleshooting (FAQ)

Problem	Possible Solution
Power LED is not ON	• Press the ⏻ button to check if the monitor is in the ON mode. • Check if the power cord is properly connected to the monitor and the power outlet. • Check Power Indicator function in main menu OSD. Select “ON” to turn on power LED.
The power LED lights amber and there is no screen image	• Check if the monitor and the computer are in the ON mode. • Make sure the signal cable is properly connected the monitor and the computer. • Inspect the signal cable and make sure none of the pins are bent. • Connect the computer with another available monitor to check if the computer is properly working.
Screen image is too light or dark	• Adjust the Contrast and Brightness settings via OSD.
Screen image bounces or a wave pattern is present in the image	• Make sure the signal cable is properly connected to the monitor and the computer. • Move electrical devices that may cause electrical interference.
Screen image has color defects (white does not look white)	• Inspect the signal cable and make sure that none of the pins are bent. • Perform Reset via OSD. • Adjust the R/G/B color settings or select the Color Temperature via OSD.
No sound or sound is low	• Adjust the volume settings of both your monitor and computer. • Make sure the computer sound card driver is properly installed and activated.
OSD menu several functions are blocked and unavailable for selection	1. Turn on main menu OSD. 2. Select “System Setup” at the first OSD level. 3. Set Power Setting to Performance Mode to enable those functions.

3.6 Supported Timing List

Support Timing

Timing	Resolution	HDMI	DP
PC Timing	640x480-60Hz	V	V
PC Timing	640x480-75Hz	V	V
PC Timing	800x600-60Hz	V	V
PC Timing	800x600-75Hz	V	V
PC Timing	1024x768-60Hz	V	V
PC Timing	1024x768-75Hz	V	V
PC Timing	1280x720-60Hz	V	V
PC Timing	1280x960-60Hz	V	V
PC Timing	1280x1024-60Hz	V	V
PC Timing	1600x1200-60Hz	V	V
PC Timing	1920x1080-60Hz	V	V
Video Timing	720x480P-60Hz (VIC-2,3)	V	V
Video Timing	720x576P-50Hz (VIC-17,18)	V	V
Video Timing	1280x720P-50Hz (VIC-19)	V	V
Video Timing	1280x720P-60Hz (VIC-4)	V	V
Video Timing	1920x1080P-50Hz (VIC-31)	V	V
Video Timing	1920x1080P-24Hz (VIC-32)	V	V
Video Timing	1920x1080P-25Hz (VIC-33)	V	V
Video Timing	1920x1080P-30Hz (VIC-34)	V	V
Video Timing	1920x1080P-60Hz (VIC-16)	V	V
Video Timing	1920x1080P-119.88/120Hz (VIC-63)	V	V
Video Timing	1920x1080P-100Hz (VIC-64)	V	V
Video Timing	3840x2160P-24Hz	V	
Video Timing	3840x2160P-25Hz	V	
Video Timing	3840x2160P-30Hz	V	
Video Timing	3840x2160P-50Hz(VIC-96)	V	
Video Timing	3840x2160P-60Hz(VIC-97)	V	

16:9 Timing

Timing	Resolution	HDMI	DP
Detail Timing	2560x1440-60Hz	V	V
Detail Timing	2560x1440-120Hz	V	V
Detail Timing	2560x1440-144Hz	V	V
Detail Timing	2560x1440-150Hz	V	
Detail Timing	2560x1440-165Hz		V
Detail Timing	2560x1440-200Hz		V
Detail Timing	2560x1440-220Hz		V
Detail Timing	1920X1080-144Hz	V	V
Detail Timing	1920X1080-150Hz	V	
Detail Timing	1920X1080-200Hz		V

4:3 Timing

Timing	Resolution	HDMI	DP
Detail Timing	1024x768-144Hz	V	
Detail Timing	1280x960-144Hz	V	
Detail Timing	1440x1080-144Hz	V	
Detail Timing	1728x1080-144Hz	V	
Detail Timing	1920x1440-144Hz	V	
Detail Timing	1024x768-150Hz	V	
Detail Timing	1280x960-150Hz	V	
Detail Timing	1440x1080-150Hz	V	
Detail Timing	1728x1080-150Hz	V	
Detail Timing	1920x1440-150Hz	V	
Detail Timing	1024x768-200Hz		V
Detail Timing	1152x864-200Hz		V
Detail Timing	1280x960-200Hz		V
Detail Timing	1440x1080-200Hz		V
Detail Timing	1728x1080-200Hz		V
Detail Timing	1920x1440-200Hz		V
Detail Timing	1024x768-220Hz		V
Detail Timing	1152x864-220Hz		V
Detail Timing	1280x960-220Hz		V
Detail Timing	1440x1080-220Hz		V
Detail Timing	1728x1080-220Hz		V
Detail Timing	1920x1440-220Hz		V
Detail Timing	2560x1440-60Hz	V	V
Detail Timing	2560x1440-120Hz	V	V

24.5” Simulation Timing

Timing	Resolution	HDMI	DP
Detail Timing	2332x1308-60Hz	V	V
Detail Timing	2332x1308-120Hz	V	V
Detail Timing	2332x1308-144Hz	V	
Detail Timing	2332x1308-150Hz	V	
Detail Timing	2332x1308-200Hz		V
Detail Timing	2332x1308-220Hz		V
Detail Timing	2560x1440-60Hz	V	V
Detail Timing	2560x1440-120Hz	V	V

*** The modes not listed in the above tables may not be supported. For optimal resolution, we recommend that you choose a mode listed in the above tables.**