Paulmann

Safety Instructions

1, 2, 3, 4, 5, 6, 7, 10, 12, 16, 19, 20, 24, 28, 33, 34

Info

www.paulmann.com

Paulmann Licht GmbH
Quezinger Feld 2
31832 Springe
Germany

www.paulmann.com

Art.-Nr.: **941.89**

(+MA 326) PH02/18

CE

941.89

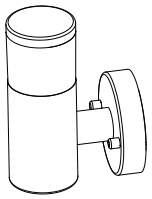

1x

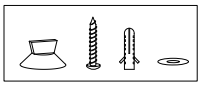

incl.

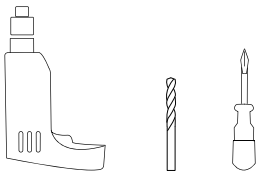

A

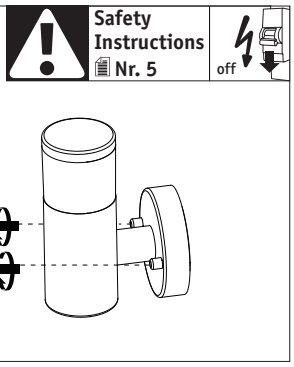

B

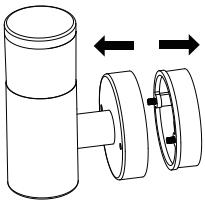

C

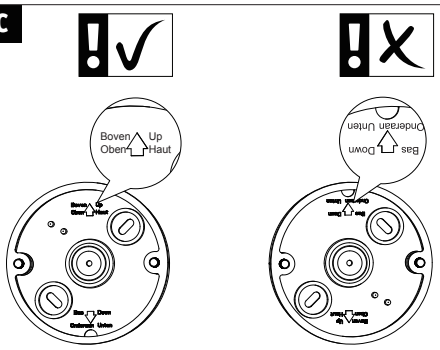

D

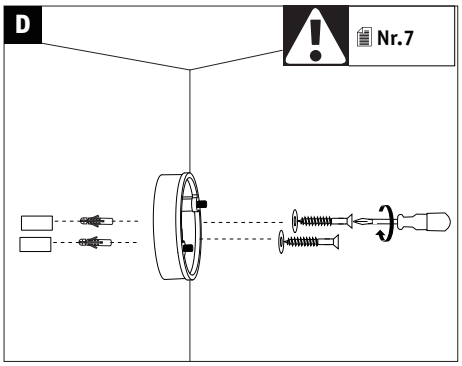

E

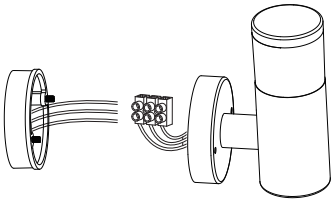

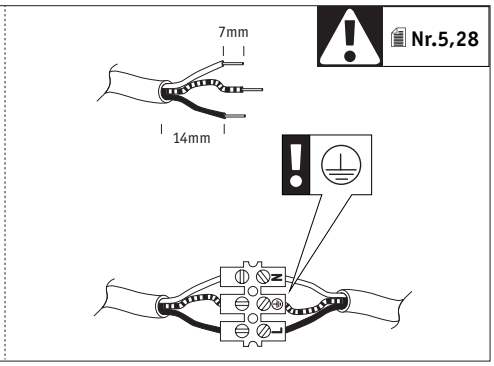

F

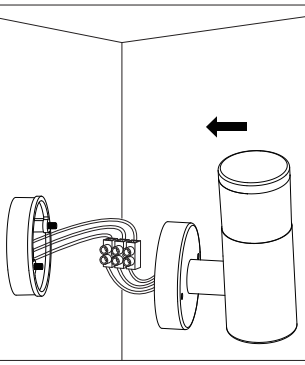

G

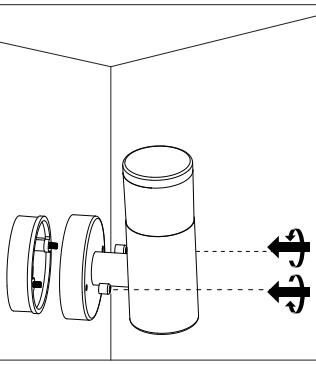

H

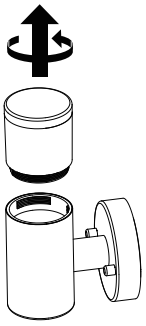

I



not incl.
GU10 Bulb

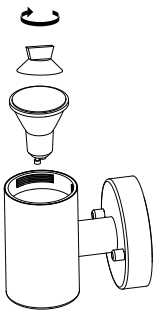

J

