Fosi Audio

Fosi Audio M04 User Manual

Product Specifications

Small but mighty! Fosi Audio M04 is a 100w mono-channel class D subwoofer amplifier, with a SUB/PBTL switch you can select subwoofer bass amplifier or full frequency mono amp, can be connected to active/passive subwoofer and passive speaker. Power switch was integrated into volume control, we made it small but supply an in-wall or stand-alone subwoofer the power it needed so you can experience room-shaking low frequency impact (bass) on movie and music soundtracks.

Input Interface:	RCA input
Output Interface: Output:	speaker's output passive/active subwoofer + passive speaker
SNR:	≥ 102dB
THD:	≤ 0.02% (1KHz, 1W)
Power Adapter: Product Adapter Input Voltage Range:	19V/4.74A DC 12V - 24V
Frequency Response Range: Bass Frequency Range: Terminating Impedance: Max Power Output: Input Sensitivity:	20Hz-20KHz(±3db) 20Hz-200Hz 2Ω - 8Ω 100watt @3Ω 600MV
Dimensions (H * W * D):	103 x 57 x 43MM (4.06 x 2.24 x 1.69") includes knobs
Net weight:	175g

Product Overview & Control Functions

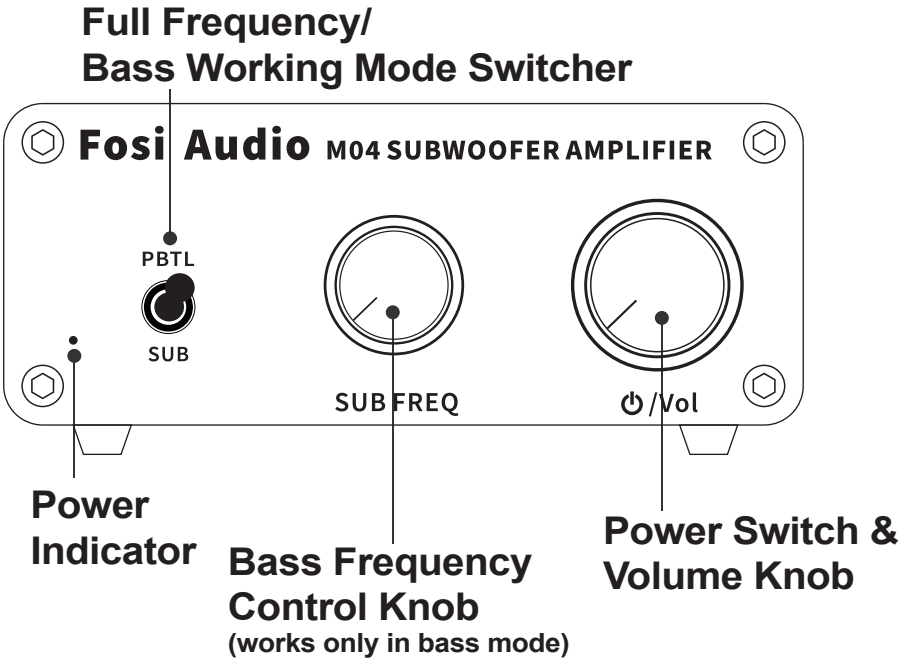

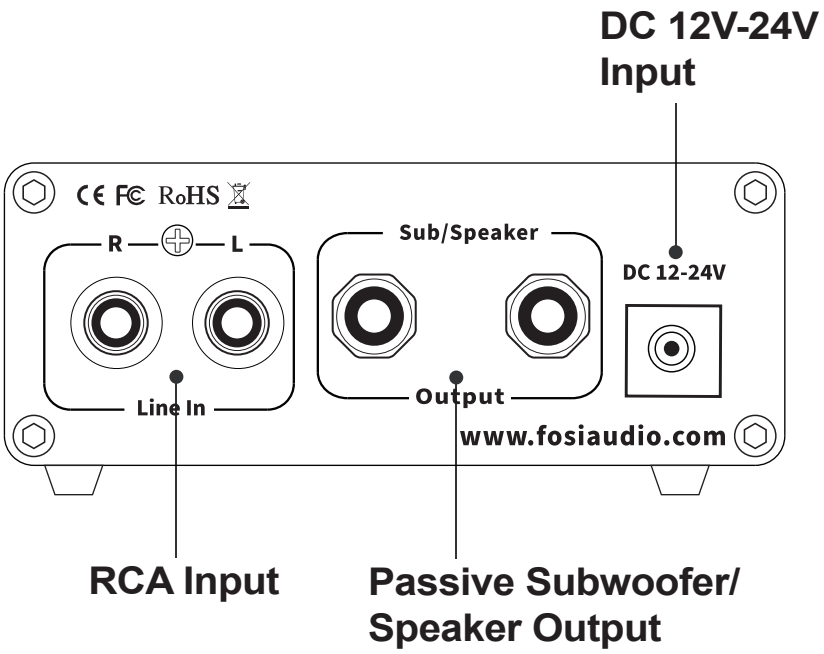

Note: The upgraded version can connect to both passive and active subwoofer.

Package Contents

Fosi Audio M04 *1
19V Power Adapter *1
User Manual *1

Quick Setup

Step 1: Prepare M04, 19V power adapter, passive subwoofer/passive speaker, speaker wires or banana plugs;

Step 2: Connect the M04 to the passive subwoofer/passive speaker via the speaker wire, you can use the bare wire or banana plugs;

Step 3: Use RCA cable to connect your device to the RCA Line In of M04;

Step 4: Switch PBTL/SUB switcher to SUB if you are using passive subwoofer, and PBTL if you are using passive speaker;

Step 5: Make sure the volume knob turned to the minimum;

Step 6: Connect the 19V power adapter to the DC input;

Step 7: Adjust volume control knob to power on M04.

Tips: How to connect the speaker wire?

Method 1: Bare wire connection illustration

① : Release the horn terminals block terminals;

② : Insert the two ends of the speaker wire into the amplifier and speaker terminal holes;

③ : Tighten the horn terminals.

Note: Please avoid the speaker wires being exposed and touching the amplifier casing, as this may cause a short circuit fault.

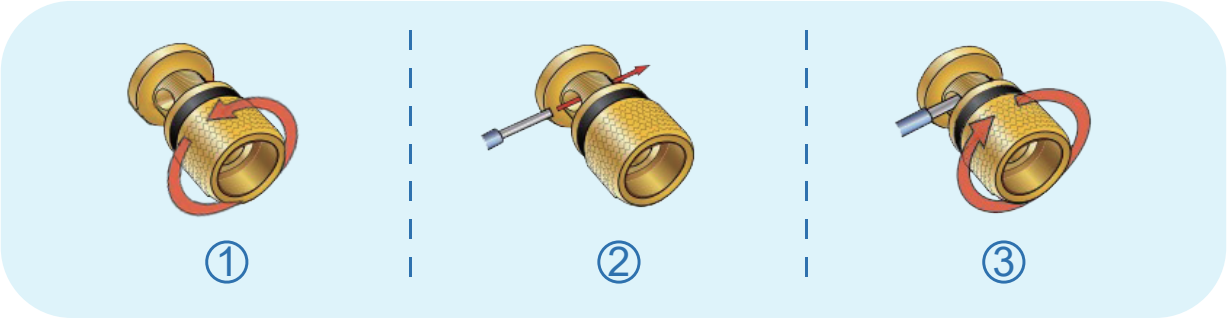

Method 2: Banana plugs connection illustration

① : Release the banana jacket;

② : Loosen the screw;

③ : Insertion speaker wire and tighten the screw;

④ : Tighten the banana jacket;

⑤ : Insert the banana plug into the horn terminals of the speaker and amplifier.

Note: Please take care to avoid contact between the two banana plugs and causing a short circuit fault as some of the banana plugs are metal cased.

Fosi Audio

Troubleshooting/QA

Q: All cables are connected, but no sound output?

A: 1. Check if the POWER indicator is on, and turn the VOL knob clockwise to turn on the POWER if it is not. When the indicator light is still not on, you can find a laptop power and connect to test whether it is the machine fault or a power failure;

2. If the indicator light is on, check whether the VOL knob is in the minimum position. If so, turn clockwise to normal Volume;

3. If both of the above are normal, check the input device if it is paused, mute, or the volume is minimized.

Q: Why do loudspeakers make a lot of electric noise?

A: If you are not using the original factory standard power supply, please replace the power supply before testing. Many power supplies in the market have large interference coefficient, which will cause a lot of current sound.

Q: Why doesn't the SUB FREQ knob control the sound?

A: The SUB FREQ knob is to adjust the frequency output of subwoofer, please make sure the SUB/PBTL switch on the front panel is selected to SUB.

Q: Why does the sound break?

A: when the output power exceeds the normal power of amplifier, there will be a large distortion. you can turn down the front volume or the power amplifier volume, then it is ok.

Q: When connecting RCA line input but not playing music, why it has interferential sound?

A: If you use unshielded signal lines, there will be interference signals entering the power amplifier. If you hate the sound, you are advised to use the shielded signal lines or unplug the signal lines.

Q: Why does the amplifier stop working after a period of time? After a period of time off, it was working again

A: Usually in this case, the amplifier is overheating protection, and the output power may have exceeded the designed power, so you can lower the volume a little and try again.

Q: why does the volume of the machine stay the same, while the sound of different audio sources (such as CDS and mobile phones) is different?

A: The output range of different types of audio source devices is different, the mobile phone is usually 0.35mV, and the CD is 1V. The signal output amplitude of the sound source will directly influence the volume.

Q: Can this amp be left on all the time?

A: It can be connected all the time and it is safe without power consumption.

Q: Why the sound of the power amplifier is not very good at the beginning, the high frequency is not clear, but after working for 8 hours the sound is normal?

A: Speaker and amplifier is a very sensitive equipment, also need to know each other, and the matching process, usually the sound will be good after the new power amplifier and the speaker work more than ten hours.

Any problems please leave a message to the customer support email address: support@fosiaudio.com.

Warranty Information

All Fosi Audio products have an 18-month limited warranty on parts and labor from the date of purchase. Please contact us if you have any problems.

About Fosi Audio

Fosi Audio designs and builds innovative audio products with all your music in mind. Great sound, simple but elegant designs, high-quality materials, and truly useful features are what Fosi Audio is about. We sincerely hope you get as much enjoyment from our products as we've had to create them!

Our website: www.fosiaudio.com
Amazon store: www.amazon.com/fosiaudio
Our Youtube channel: Fosi Audio
Our Facebook page: Fosi Audio

After-sale Service and Technical Support Email:
support@fosiaudio.com
fosiaudio@hotmail.com

Fosi Audio Product's User Manual

Fosi Audio