ekwb

EK-Scalar

TERMINAL

Compatible with EK-Vector GPU blocks.

INSTRUCTIONS

TABLE OF CONTENT

ATTACHING THE EK-SCALAR TERMINAL 3
CHOOSING INLET AND OUTLET PORTS 4
SUPPORT AND SERVICE 6
SOCIAL MEDIA 6

ATTACHING THE EK-SCALAR TERMINAL

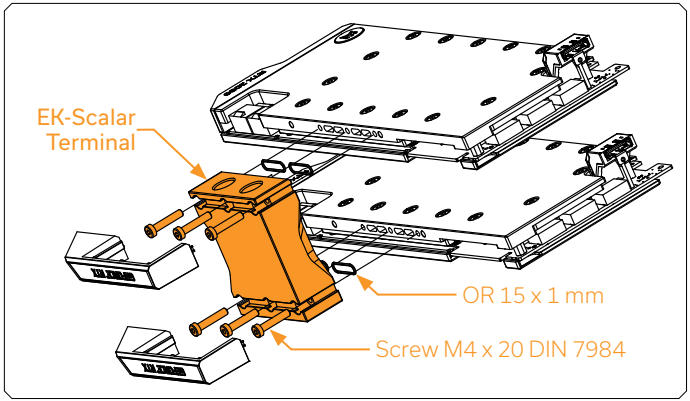

Please take the following steps for installing any EK-Scalar terminal to your graphics cards water blocks:

1. Remove the cover from your water block terminal, be careful not to pull on any LED wiring as this may damage soldered joints.
2. Remove the pre-installed Terminal from each water block. Unfasten the three (3) M4 screws using the supplied 2.5 mm Allen (hex) key.
3. Install the gaskets (OR 15 x 1mm) in grooved slots on your new EK-Scalar terminal. Make sure the gaskets are installed correctly! Each water block or blank link requires two (2) gaskets!
4. Secure the new EK-Scalar Terminal to each water block using the enclosed M4 x 20 DIN7984 screws with the suppliedd 2.5 mm Allen (hex) key.
5. Plug all the remaining unused G1/4 threaded ports, if any, using the 6mm Allen (hex) key and install your tubes fittings for both inlet and outlet.

CHOOSING INLET AND OUTLET PORTS

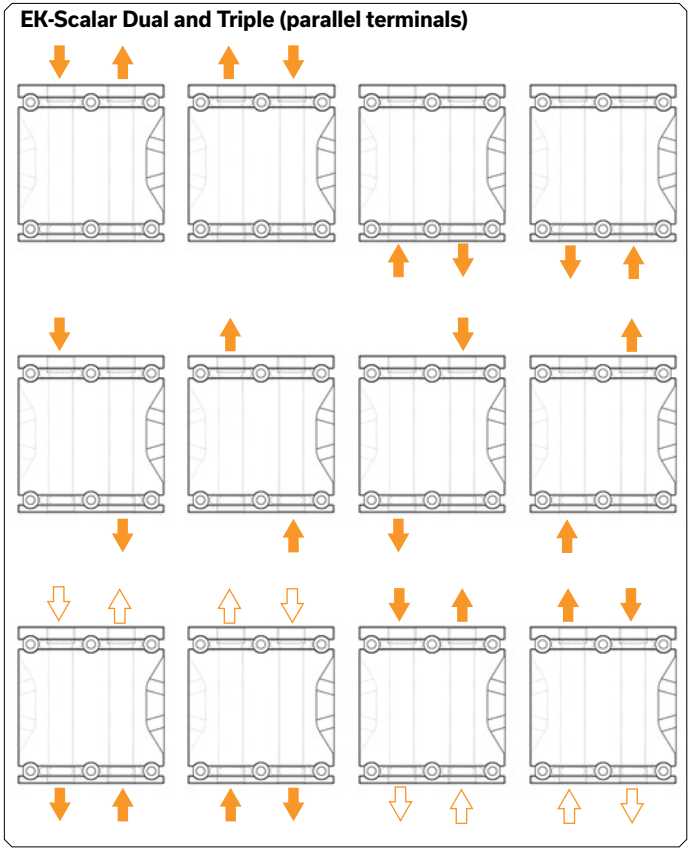

EK-Scalar terminals are intended to provide several different flow configurations depending on the layout of your loop.

Although it may not be optimal for thermal performance it is also possible to configure your EK-Scalar terminal in parallel with an additional water block, such as a CPU block or monoblock. Ensure that the flow rate of the loop is sufficient and each block has similar restriction in order that each individual block receives adequate flow.

EK-Scalar Quad (semi-parallel terminals)

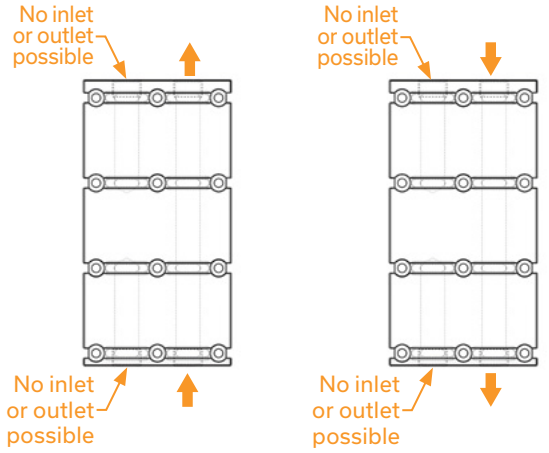

SUPPORT AND SERVICE

For assistance please contact:
http://support.ekwb.com/

EKWB d.o.o.
Pod lipami 18
1218 Komenda
Slovenia - EU

SOCIAL MEDIA

EKWaterBlocks

@EKWaterBlocks

ekwaterblocks

EKWBofficial

ekwaterblocks