BenQ Ceiling Mounting Guide

Welcome

i Copyright

Copyright 2003 by BENQ Corporation. All rights reserved. No part of this publication may be reproduced, transmitted, transcribed, stored in a retrieval system or translated into any language or computer language, in any form or by any means, electronic, mechanical, magnetic, optical, chemical, manual or otherwise, without the prior written permission of this company.

ii Disclaimer

BENQ Corporation makes no representations or warranties, either expressed or implied, with respect to the contents hereof and specifically disclaims any warranties, merchantability or fitness for any particular purpose. Further, BENQ Corporation reserves the right to revise this publication and to make changes from time to time in the contents hereof without obligation of this company to notify any person of such revision or changes.

***Windows, Internet Explorer and Outlook Express are trademarks of Microsoft Corporation. Others are copyrights of their respective companies or organizations.**

iii Safety Instructions

1. Follow the instructions in this guide when installing the projector with this bracket. Improper or inadequate installation could cause the projector to fall and cause injures.
2. Make sure the installation is secure enough to bear the weight of all and withstand vibrations.
3. Use only the parts provided with the bracket, and any parts (commercially available) that are specified in this guide.
4. Do not modify the bracket or the parts provided with the bracket.
5. Do not use damaged parts. If any parts become damaged, contact your dealer.
6. All bolts and screws must be tightened securely.
7. Make sure not to block any ventilation openings when installing the projector.
8. Do not install the projector in a location that is subject to high levels of dust or humidity.
9. Do not install the projector in a location that is exposed to direct sunlight or in a location that is subject to extreme fluctuations in temperature (such as near an air conditioner).
10. Clean only with a dry cloth.
11. Special techniques and experience are required when installing the projector with this bracket. It is recommended that you contact your dealer to install the projector for you.
12. Once the projector is installed, safety checks should be conducted on a regular basis.

iv Table of Contents

Packing Parts List 3

Projector Installation and Throw Distance Chart 4

Installing a Projector with The Ceiling Bracket 7

Adjusting the Ceiling Bracket 10

Specifications and Diagrams 12

1 Packing Parts List

✓ CEILING ADAPTER	✓ U-PLATE	✓ TUBE
✓ PIPE	✓ PIPE-BASE	✓ H – ADJUST ADAPTER
✓ PROJECTOR ADAPTER	✓ V – ADJUST BOLT	✓ NUT x 7
✓ WASHER x 1	✓ M4 SCREW x 10	✓ BOLT x 6 (TUBE BOLT x 2, L – ADJUST BOLT x 2, PIPE BOLT x 2)

Names of Parts

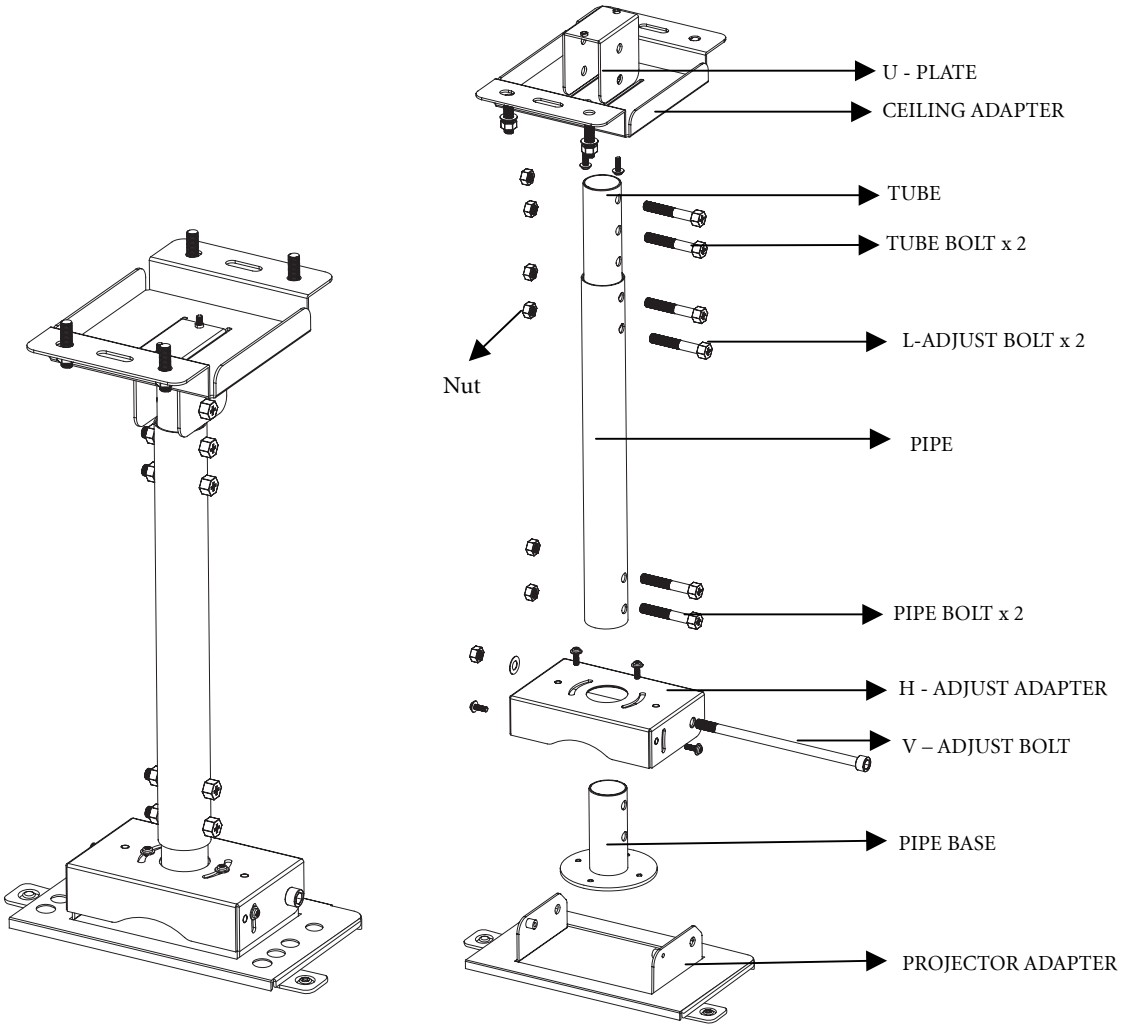

2 Projector Installation and Throw Distance Chart

Ceiling Installation for both 4:3 and 16:9 screens

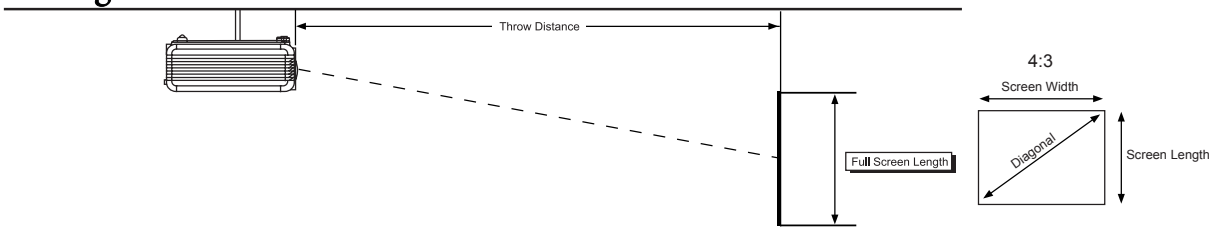

Floor Installation for both 4:3 and 16:9 screens

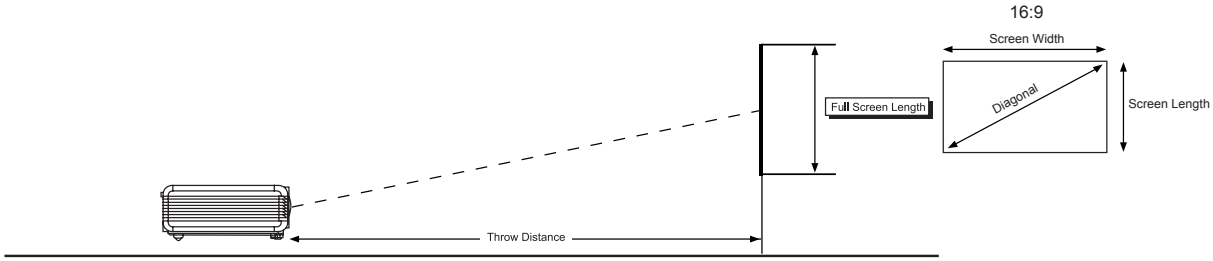

Throw Distance Chart

PB7200/ PB7220/ PB6200 (XGA) screen size chart (4:3 aspect ratio)												
Throw Distance		Diagonal measurement					Throw Distance		Diagonal measurement			
		Minimum zoom		Maximum zoom					Minimum zoom		Maximum zoom	
feet	inches	feet	inches	feet	inches		meters	cm	meters	cm	meters	cm
4	48	2.49	29.9	3.05	36.6		1	100	0.62	62.2	0.76	76.2
6	72	3.73	44.8	4.57	54.9		1.5	150	0.93	93.3	1.14	114.3
8	96	4.98	59.7	6.10	73.2		2	200	1.24	124.5	1.52	152.4
10	120	6.22	74.7	7.62	91.4		2.5	250	1.56	155.6	1.91	190.5
12	144	7.47	89.6	9.14	109.7		3	300	1.87	186.7	2.29	228.6
14	168	8.71	104.5	10.67	128.0		3.5	350	2.18	217.8	2.67	266.7
16	192	9.96	119.5	12.19	146.3		4	400	2.49	248.9	3.05	304.8
18	216	11.20	134.4	13.72	164.6		4.5	450	2.80	280.0	3.43	342.9
20	240	12.45	149.4	15.24	182.9		5	500	3.11	311.2	3.81	381.0
22	264	13.69	164.3	16.76	201.2		5.5	550	3.42	342.3	4.19	419.1
24	288	14.94	179.2	18.29	219.5		6	600	3.73	373.4	4.57	457.2
26	312	16.18	194.2	19.81	237.7		6.5	650	4.04	404.5	4.95	495.3
28	336	17.42	209.1	21.34	256.0		7	700	4.36	435.6	5.33	533.4
30	360	18.67	224.0	22.86	274.3		7.5	750	4.67	466.7	5.72	571.5
32	384	19.91	239.0	24.38	292.6		8	800	4.98	497.8	6.10	609.6

PB7200/ PB7220/ PB6200 (XGA) screen size chart (16:9 aspect ratio)												
Throw Distance		Diagonal measurement					Throw Distance		Diagonal measurement			
		Minimum zoom		Maximum zoom					Minimum zoom		Maximum zoom	
feet	inches	feet	inches	feet	inches		meters	cm	meters	cm	meters	cm
4	48	2.29	27.5	2.80	33.6		1	100	0.57	57.4	0.70	70.0
6	72	3.44	41.3	4.20	50.4		1.5	150	0.86	86.0	1.05	105.0
8	96	4.59	55.1	5.60	67.2		2	200	1.15	114.7	1.40	140.0
10	120	5.74	68.8	7.00	84.0		2.5	250	1.43	143.4	1.75	179.4
12	144	6.88	82.6	8.40	100.8		3	300	1.72	172.1	2.10	209.9
14	168	8.03	96.4	9.80	117.6		3.5	350	2.01	200.8	2.45	244.9
16	192	9.18	110.1	11.20	134.4		4	400	2.29	229.4	2.80	279.9
18	216	10.32	123.9	12.60	151.2		4.5	450	2.58	258.1	3.15	314.9
20	240	11.47	137.7	14.00	167.9		5	500	2.87	286.8	3.50	349.9
22	264	12.62	151.4	15.39	184.7		5.5	550	3.15	315.5	3.85	384.9
24	288	13.77	165.2	16.79	201.5		6	600	3.44	344.1	4.20	419.9
26	312	14.91	179.0	18.19	218.3		6.5	650	3.37	372.8	4.55	454.9
28	336	16.06	192.7	19.59	235.1		7	700	4.02	401.5	4.90	489.8
30	360	17.21	206.5	20.99	251.9		7.5	750	4.30	430.2	5.25	524.8
32	384	18.35	220.3	22.39	268.7		8	800	4.59	458.9	5.60	559.8

PB7100/ PB6100 (SVGA) screen size chart (4:3 aspect ratio)												
Throw Distance		Diagonal measurement					Throw Distance		Diagonal measurement			
		Minimum zoom		Maximum zoom					Minimum zoom		Maximum zoom	
feet	inches	feet	inches	feet	inches		meters	cm	meters	cm	meters	cm
4	48	1.96	23.5	2.40	28.7		1	100	0.49	48.9	0.60	59.9
6	72	2.93	35.2	3.59	43.1		1.5	150	0.73	73.4	0.90	89.8
8	96	3.91	47.0	4.79	57.5		2	200	0.98	97.8	1.20	119.8
10	120	4.89	58.7	5.99	71.9		2.5	250	1.22	122.3	1.50	149.7
12	144	5.87	70.4	7.19	86.2		3	300	1.47	146.7	1.80	179.7
14	168	6.85	82.2	8.39	100.6		3.5	350	1.71	171.2	2.10	209.6
16	192	7.83	93.9	9.58	115.0		4	400	1.96	195.7	2.40	239.6
18	216	8.80	105.7	10.78	129.4		4.5	450	2.20	220.1	2.70	269.5
20	240	9.78	117.4	11.98	143.7		5	500	2.45	244.6	2.99	299.5
22	264	10.76	129.1	13.18	158.1		5.5	550	2.69	269.0	3.29	329.4
24	288	11.74	140.9	14.37	172.5		6	600	2.93	293.5	3.59	359.4
26	312	12.72	152.6	15.57	186.9		6.5	650	3.18	317.9	3.89	389.3
28	336	13.70	164.3	16.77	201.2		7	700	3.42	342.4	4.19	419.3
30	360	14.67	176.1	17.97	215.6		7.5	750	3.67	366.8	4.49	449.2
32	384	15.65	187.8	19.17	230.0		8	800	3.91	391.3	4.79	479.1

PB7100/ PB6100 (SVGA) screen size chart (16:9 aspect ratio)												
Throw Distance		Diagonal measurement					Throw Distance		Diagonal measurement			
		Minimum zoom		Maximum zoom					Minimum zoom		Maximum zoom	
feet	inches	feet	inches	feet	inches		meters	cm	meters	cm	meters	cm
4	48	1.80	21.6	2.20	26.4		1	100	0.45	45.1	0.55	55.0
6	72	2.70	32.4	4.20	50.4		1.5	150	0.68	67.6	0.82	82.5
8	96	3.61	433	5.60	67.2		2	200	0.90	90.1	1.10	110.0
10	120	4.51	54.1	7.00	84.0		2.5	250	1.13	112.7	1.37	137.5
12	144	5.41	64.9	8.40	100.8		3	300	1.35	135.2	1.65	164.9
14	168	6.31	75.7	9.80	117.6		3.5	350	1.58	157.7	1.92	192.4
16	192	7.21	86.5	11.20	134.4		4	400	1.80	180.3	2.20	219.9
18	216	8.11	97.3	12.60	151.2		4.5	450	2.03	202.8	2.47	247.4
20	240	9.01	108.2	14.00	167.9		5	500	2.25	225.3	2.75	274.9
22	264	9.91	119.0	15.39	184.7		5.5	550	2.48	247.9	3.02	302.4
24	288	10.82	129.8	16.79	201.5		6	600	2.70	270.4	3.30	329.9
26	312	11.72	140.6	18.19	218.3		6.5	650	2.93	292.9	3.57	357.4
28	336	12.62	151.4	19.59	235.1		7	700	3.15	315.5	3.85	384.9
30	360	13.52	162.2	20.99	251.9		7.5	750	3.38	338.0	4.12	412.4
32	384	14.42	173.1	22.39	268.7		8	800	3.61	360.5	4.40	439.8

There is 3% ~ 5% tolerance among these numbers due to optical component limits.

*** 1m = 3.28 feet, 1 feet = 0.305m, 1m = 100cm, 1 feet = 12 inches**

3 Installing a Projector with The Ceiling Bracket

Overview

■ Diagram of completed installation

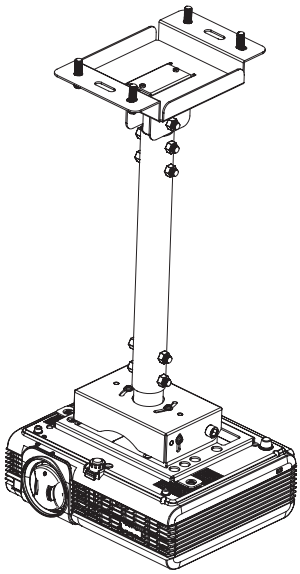

■ Ceiling Mount Device

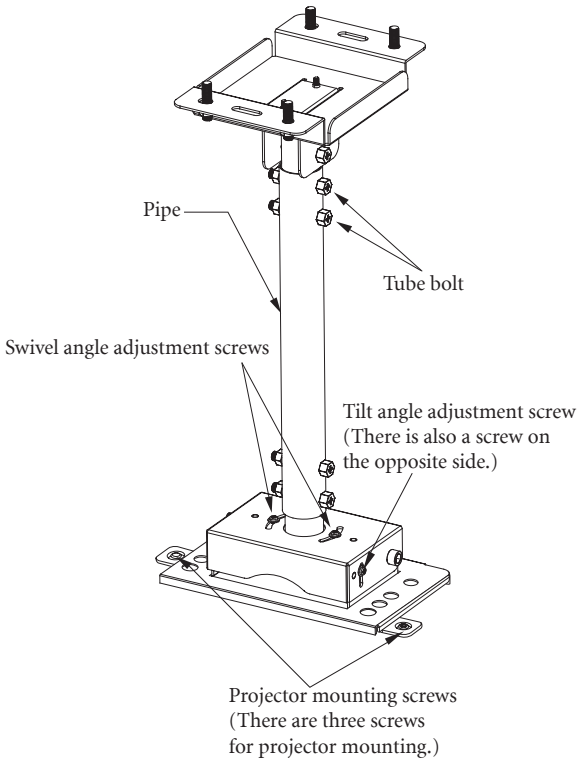

Installation Procedure

STEP A Insert the U-PLATE into the CEILING ADAPTER, and tighten two M4 screws (from the bottom) into the screw holes. Then attach the top part to the ceiling.

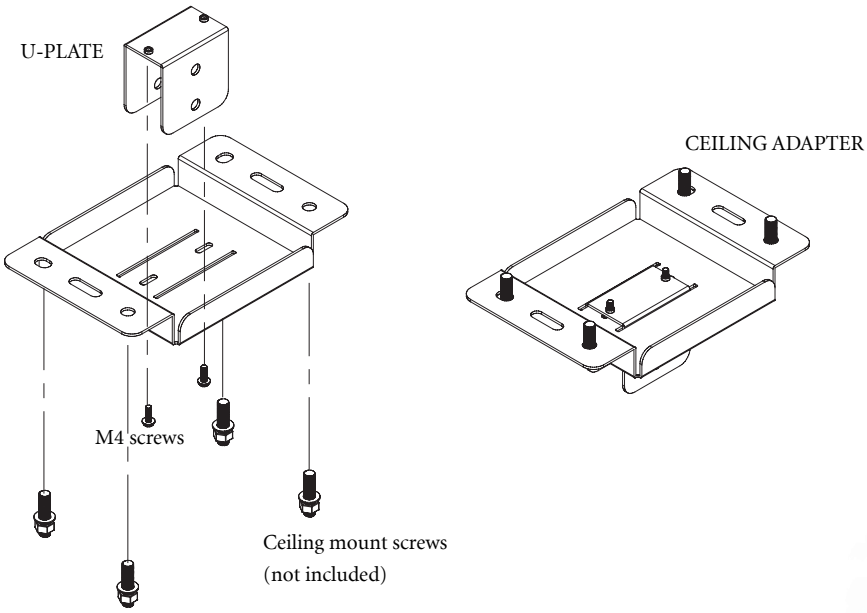

STEP B

Install the TUBE and the U-PLATE with 2 sets of bolts & nuts (TUBE BOLT).

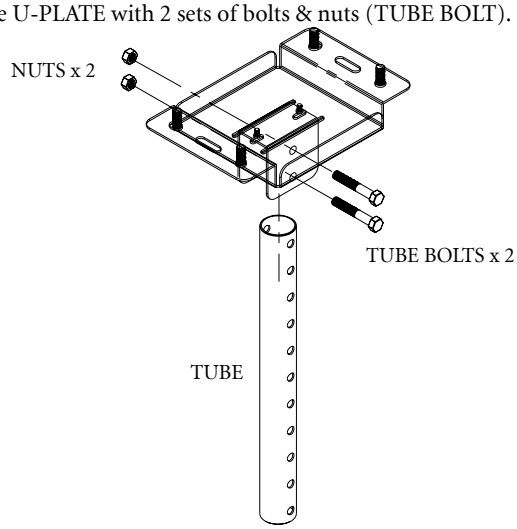

STEP C

Install the PIPE and the TUBE with 2 sets of bolts & nuts (L-ADJUST BOLT).

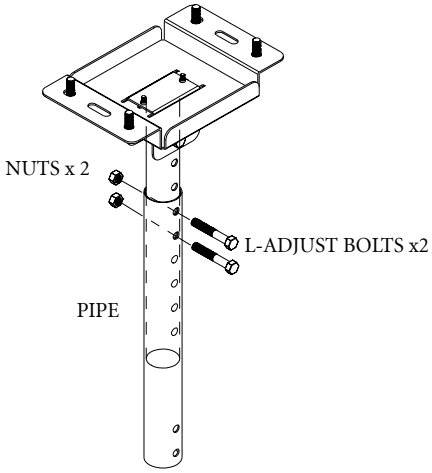

STEP D

Install the base-assembly.

STEP D1 Attach the PIPE-BASE to the H-ADJUST ADAPTER with 2 M4 screws.

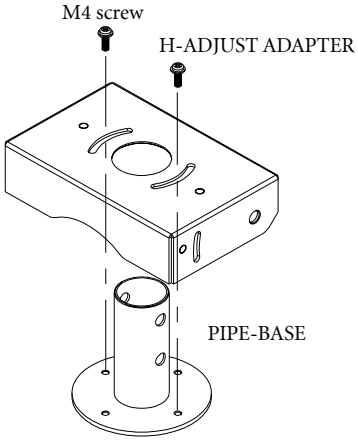

STEP D2 Combine the V-ADJUST ADAPTER and the PROJECTOR ADAPTER with one V-ADJUST BOLT set (bolt, washer and nut). Then tighten the M4 screws on both sides.

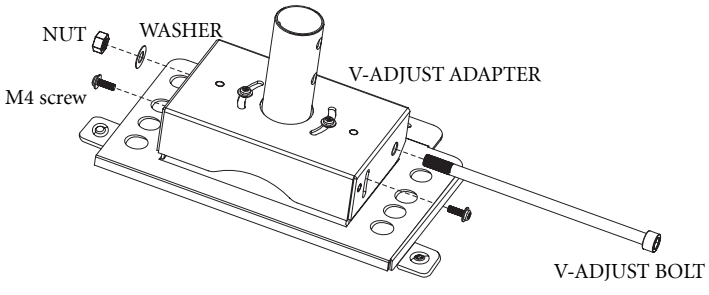

STEP E

Assemble BASS-ASSEMBLY and PROJECTOR with 4 M4 screws.

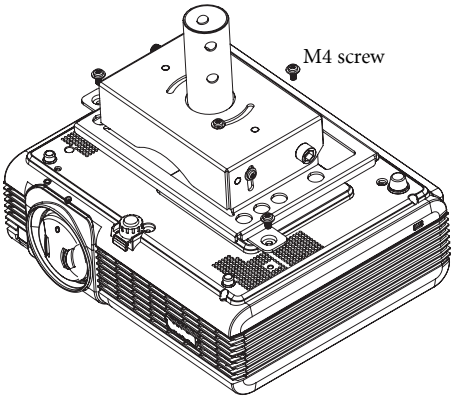

STEP F

Assemble BASE-ASSEMBLY and the ceiling mount device with 2 sets of bolts and nuts (PIPE BOLT sets).

***Two people are required for the completion of this step.**

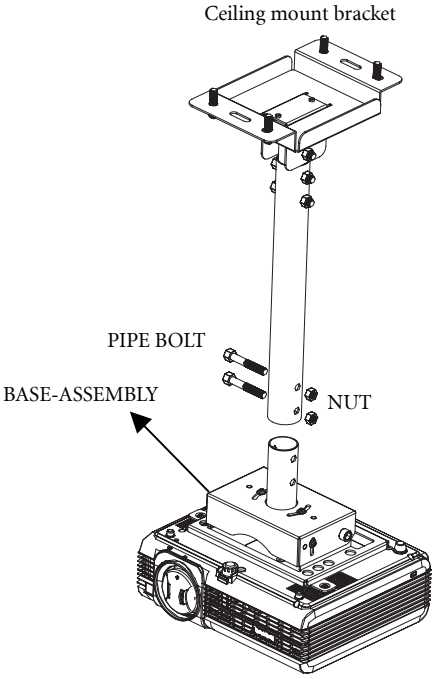

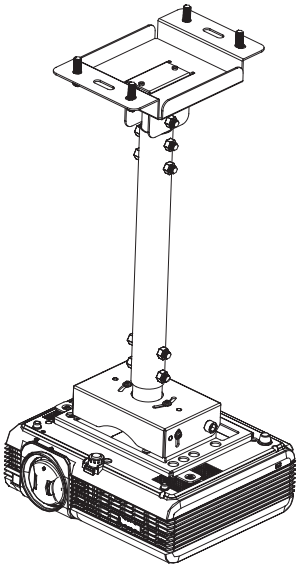

Installation finished.

4 Adjusting the Ceiling Bracket

Height Adjustment

1. Make sure to remove the projector first.
2. Loosen the nuts securing to the two L-ADJUST BOLTS.
3. Remove the L-ADJUST BOLTS from the PIPE.
4. Adjust to the correct position for the height of the screen. The height can be adjusted to 225mm or any value in a range between 555mm and 765mm in increments of 30 mm.
5. Insert the L-ADJUST BOLT back into the PIPE, and then re-attach the nuts previously removed.

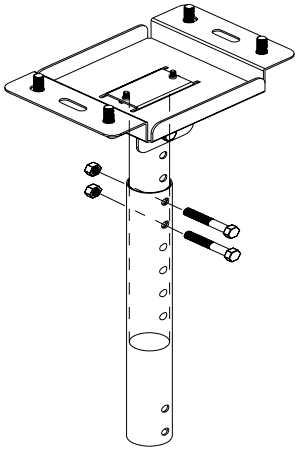

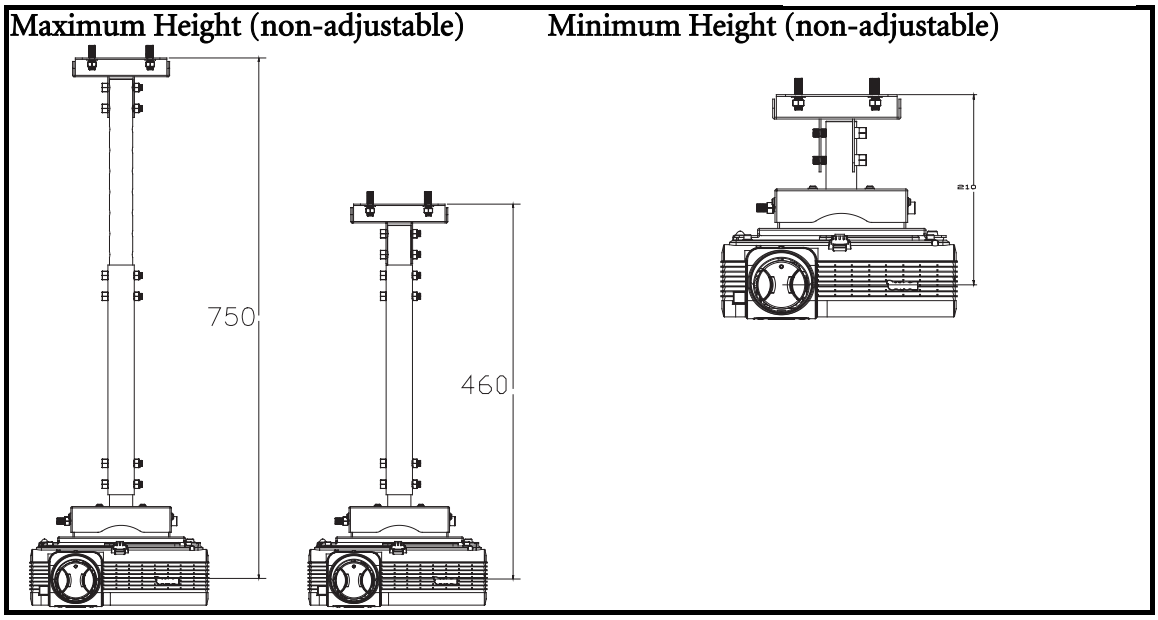

Horizontal Angle Adjustment

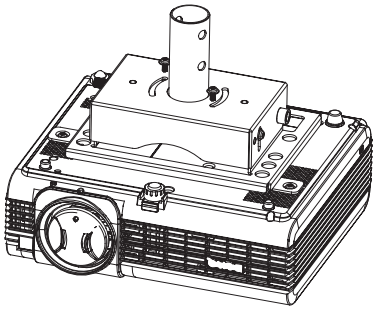

1. Loosen the two sets of screws connecting the PIPE-BASE and the H-ADJUST ADAPTER.
2. Adjust the horizontal angle so that it is correct for the orientation of the screen.
3. Re-tighten the two sets of screws connecting the PIPE-BASE and the H-ADJUST ADAPTER.
4. The swivel angle can be set within a range of negative to positive 30 degrees.

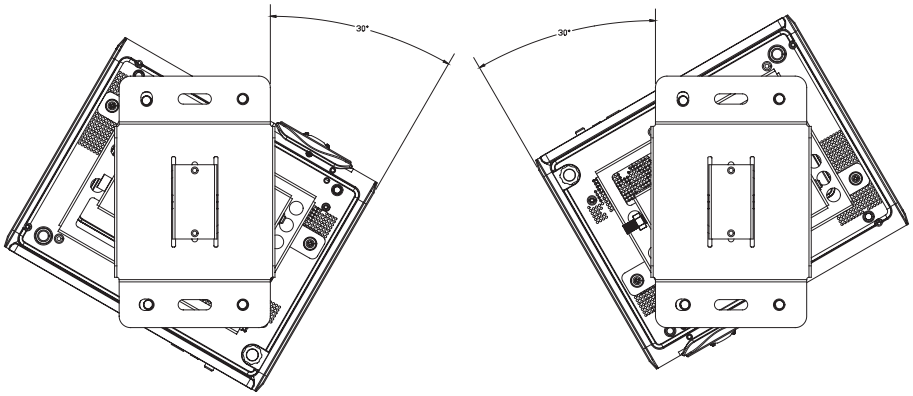

Vertical Angle Adjustment

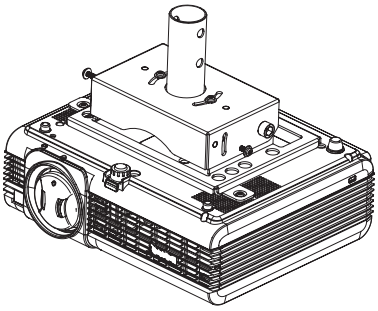

1. Loosen the two sets of screws connecting the H-ADJUST ADAPTER and the PROJECTOR ADAPTER.
2. Adjust the vertical angle to the correct one for the orientation of the screen.
3. Re-tighten the 2 sets of screws connecting the H-ADJUST ADAPTER and the PROJECTOR ADAPTER.
4. The tilt angle can be adjusted in a range between –5 and +15 degrees.

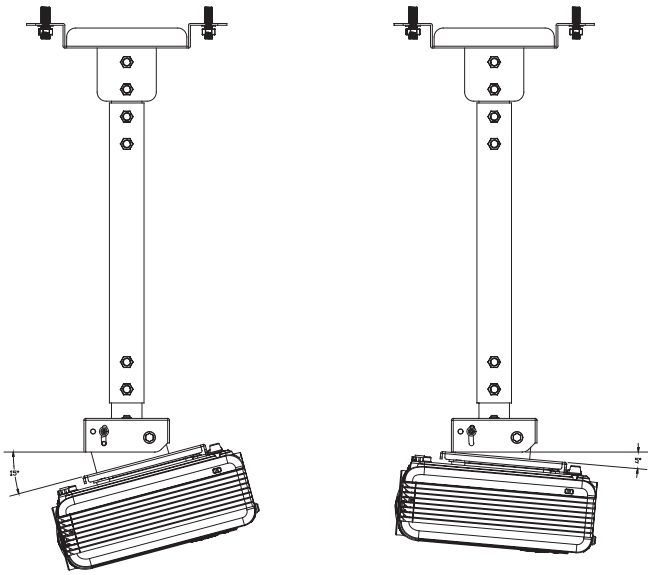

5 Specifications and Diagrams

Specifications

Adjustment Range Height Horizontal angle Vertical angle	 225mm, 555mm, 585mm, 615mm, 645mm, 675mm, 705mm, 735mm and 765mm. –30 to +30 degrees -5 to +15 degrees
Weight	3.2 kg
Loading	3.5 kg

Diagrams

■ Left View

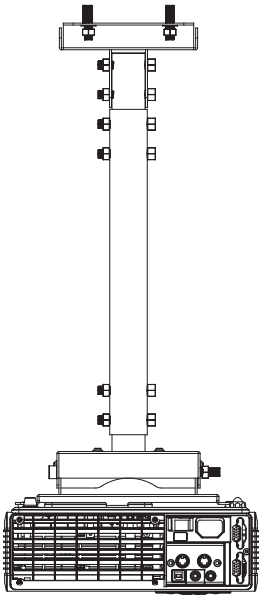

■ Front view

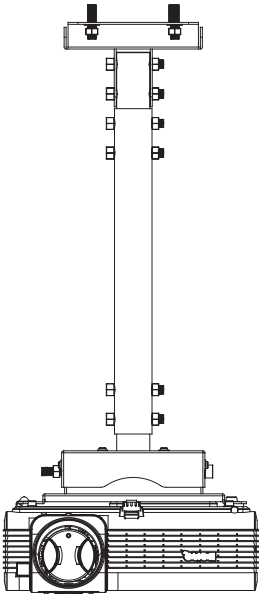
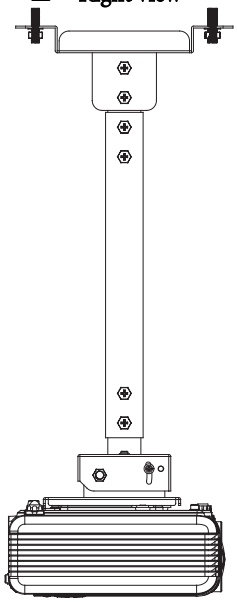
■ Right view